Barudan

HIGH SPEED AUTOMATIC EMBROIDERY MACHINE

MODEL BENS-YN

PARTS LIST

BARUDAN CO., LTD.

ADDRESS 906 JOSUIJI
ICHINOMIYA-CITY· AICHI-PREF·
JAPAN
TEL. (0586)76-1137
FAX. (0586)77-1499
TELEX 4573268 BARUNA J
CABLE BARUNA ICHINOMIYA

BENS-YN

HIGH SPEED AUTOMATIC EMBROIDERY MACHINE PARTS LIST

CONTENTS

ITEM No.		Page No.
Machine layout(BENS-YN)		1
①	Table・Frame	2
②	Sewing head a'ssy	4
③	Bed a'ssy	6
④	Automatic thread cutting mechanism Ⅰ (Thread cutting section)	8
⑤	Take up lever a'ssy	10
⑥	Needle bar mechanism Ⅰ	12
⑦	Needle bar mechanism Ⅱ	14
⑧	Jump mechanism	16
⑨	Thread guide mechanism	18
⑩	Automatic thread cutting mechanism Ⅱ (Thread away section)	20
⑪	Automatic thread cutting mechanism Ⅲ (Thread support section)	22
⑫	Automatic thread cutting mechanism Ⅳ (Thread cutting drive section)	24
⑬	Color change mechanism Ⅰ	26
⑭	Color change mechanism Ⅱ	28
⑮	Drive mechanism	30
⑯	Connecting shaft mechanism	32
⑰	Pantograph drive mechanism Ⅰ (V・H-Direction)	34
⑱	Pantograph drive mechanism Ⅱ (H-Direction)	36
⑲	Pantograph drive mechanism Ⅲ (H-Direction・Drive)	38
⑳	Pantograph drive mechanism Ⅳ (V-Direction・Drive)	40
㉑	Pantograph drive mechanism Ⅴ (V-Direction・Guide rail base relation)	42
㉒	Control system	44
㉓	Option	46
㉔	Thread guide mechanism (Lower thread sensorium)	48
INDEX		50

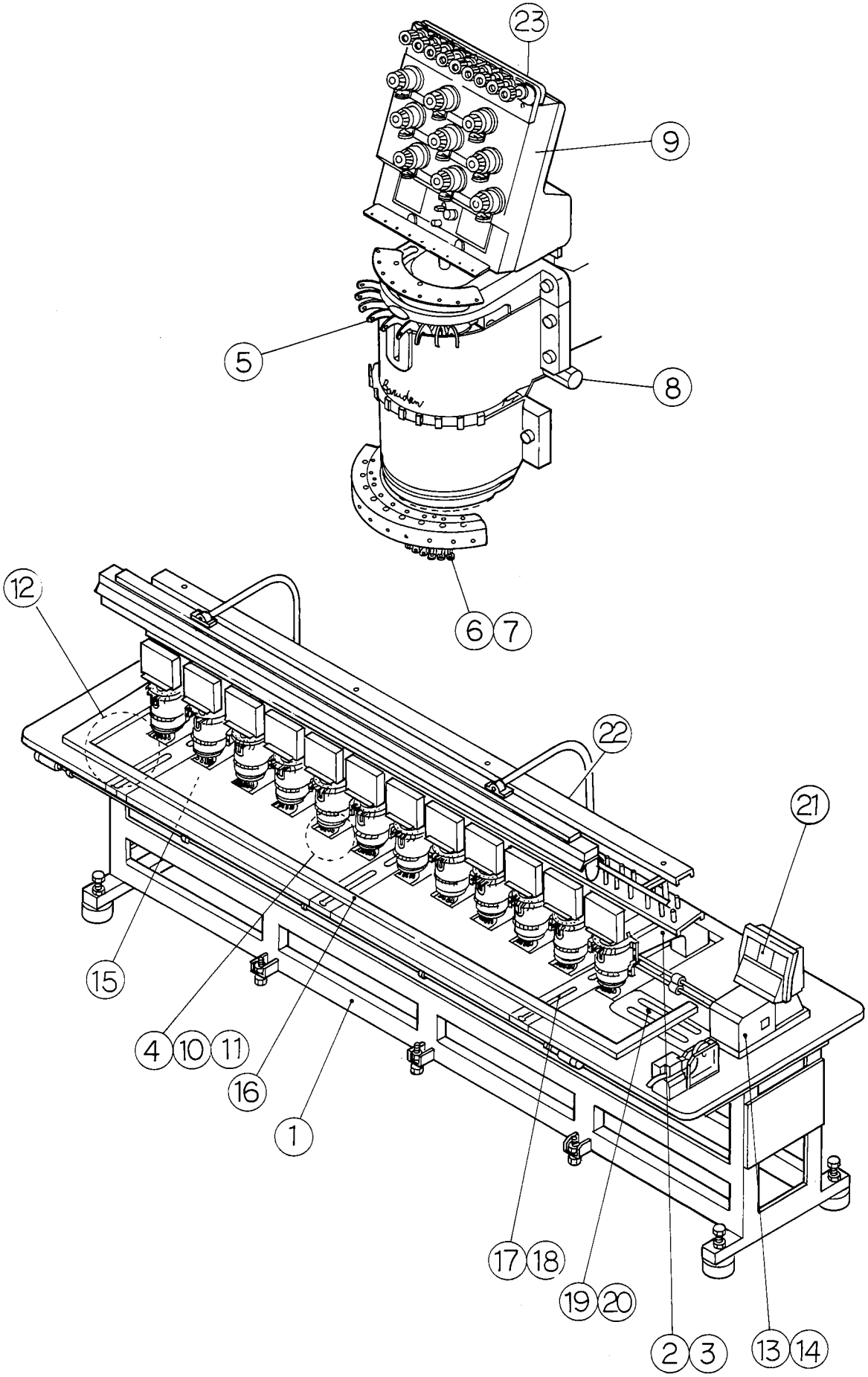
23
9
5
8
6 7
12
22
21
15
4 10 11
16
1
17 18
19 20
2 3
13 14

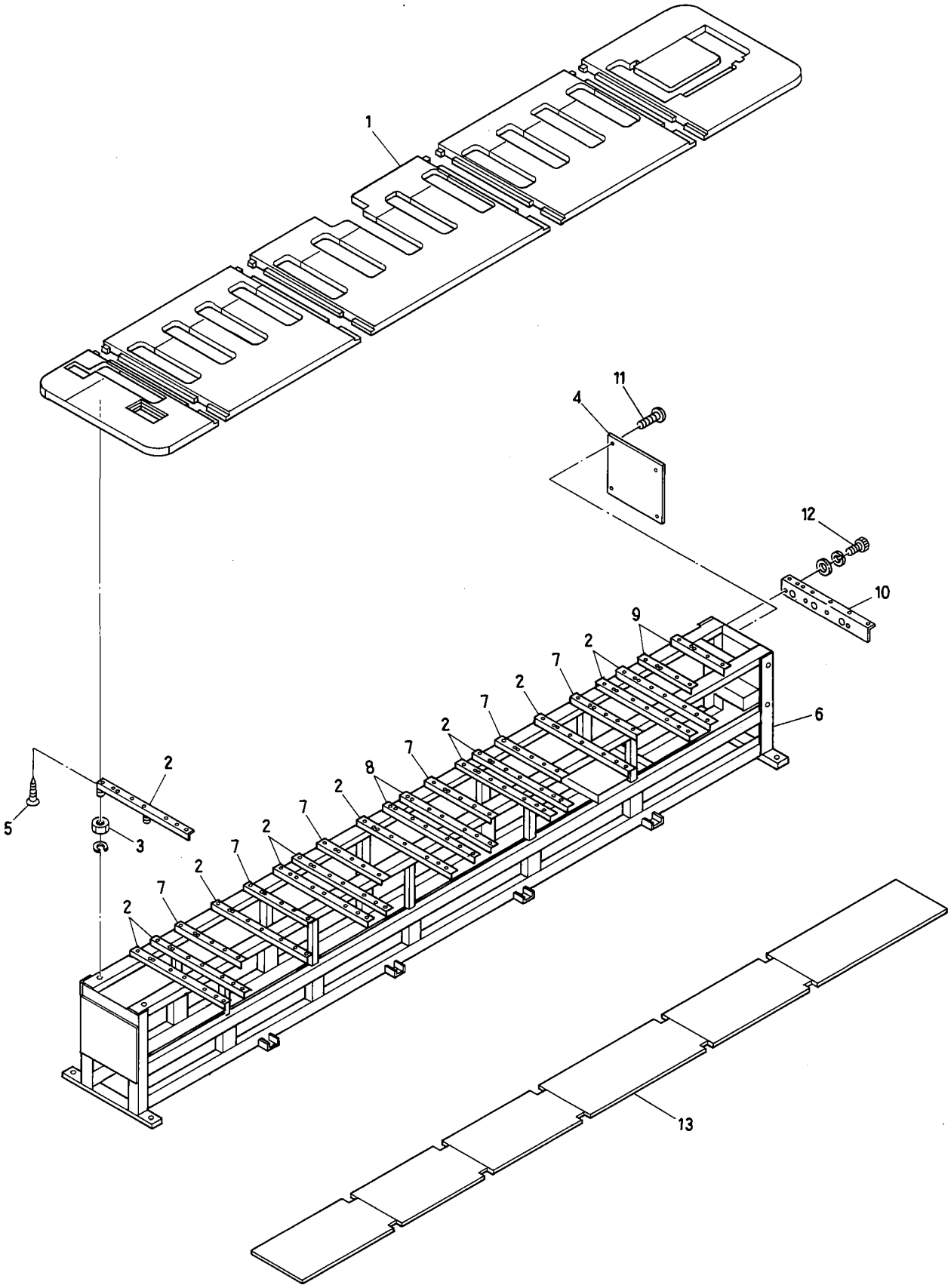
1
11
4
12
10
9
2
7
6
8
5
3
13

①Table・Frame

(※=For 15head)

ITEM	LIST No.	DESCROPTION	Q'TY	REMARK
1		Table	1	※
2	KC120860	Table support (790L)	12	※
3		Hex. nut 3／8		
4	KC110910	Leg frame side cover R	1	
5		Pias biss 5×23		
6		Frame	1	※
7	KN140950	Table support (540L)	6	
8	KC120830	Table support (740L)	2	
9	KC120841	Table support (475L)	2	
10	KV140010	Table support (BENS)	1	
11		Truss screw M6×8		
12		Hex. socket bolt M6×20		
13		Shelf board	1	※

(IE)1.100

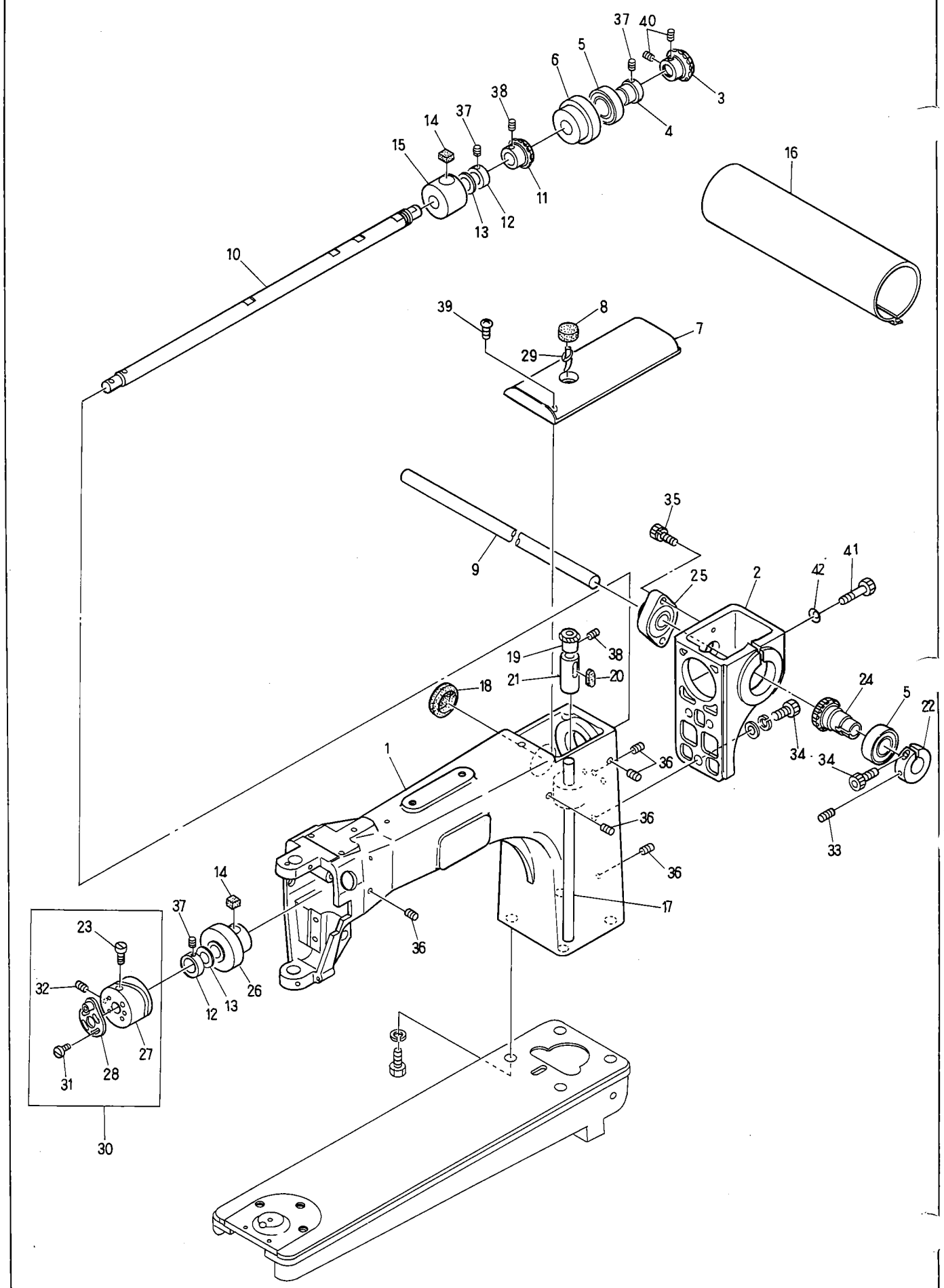
37
40
5
6
3
38
4
14
37
15
16
11
13
12
10
39
8
7
29
35
9
41
25
2
42
19
38
21
20
18
24
5
22
1
34
34
36
36
33
36
14
17
37
23
36
26
32
12
13
27
31
28
30

② Sewing head a'ssy

(※=For 15head, H=Head Q'Ty)

ITEM	LIST No.	DESCRIPTION	Q'TY	REMARK
1	KB210160	Arm	H×1	
2	KL210140	Arm gear case	H×1	
3	KL220100	Top shaft (Spiral bevel M1.5-25R)	H×1	
4	KL220090	Top shaft bearing collar (Rear)	H×1	
5	A9010017	Bearing (6004ZZ)	H×2	
6	KL220040	Top shaft bearing case (Rear)	H×1	
7	KL250040	Arm top cover	H×1	
8	KL220150	Oil felt D	H×1	
9	KV310130	Top shaft connecting shaft (L=5700)		
10	KL220000	Top shaft	H×1	
11	KF220130	Bevel gear (Top shaft)	H×1	
12	KL220080	Top shaft collar	H×2	
13	HP231390	Thrust washer (Top shaft gear)	H×2	
14	KL220130	Oil felt B	H×2	
15	KL220030	Top felt metal (Middle)	H×1	
16		Shaft cover set	1SET	※
17	KL220010	Vertical shaft	H×1	
18	A9014063	Grommet C-30-SG-36A	H×1	
19	KF220460	Bevel gear (Vertical shaft upper)	H×1	
20	KL220140	Oil felt C	H×1	
21	KL220050	Vertical metal (Upper)	H×1	
22	KL320020	Connecting gear clamp φ19	H×1	
3	KF230420	Take up lever cam set screw	H×1	
24	KL320000	Connecting gear (Spiral bevel M1.5-25L)	H×1	
25	HP321140	Top connecting shaft bearing unit	H×1	
26	KL220022	Top shaft metal (Front)	H×1	
27	KB230030	Take up lever cam K6	H×1	For small bobbin
	KB230040	Take up lever cam L1	H×1	For middle bobbin
28	KB230050	90° Crank	H×1	
29	KC251330	Oil core L=75	H×1	
30	KB230011	Take up lever cam K6 90°	H×1	For small bobbin
	KB230021	Take up lever cam L1 90°	H×1	For middle bobbin
31	A9012007	Screw (SM11/64 40×10)	H×1	
32		Screw (SM11/64 28×10)Lock	H×1	
33		Hex. socket set screw M6×10		
34		Hex. socket bolt M6×25		
35		Hex. socket bolt M6×35 (With spring washer)		
36		Hex. socket set screw M6×8		
37		Hex. socke set screw M6×6		
38		Screw (SM1/4 山40×4)		
39		Truss screw M4×10		
0		Hex. socke set screw M6×6 (With adhesion)		
41		Hex. socket bolt M6×60		
42		Disc spring M6		

(IE)1.100

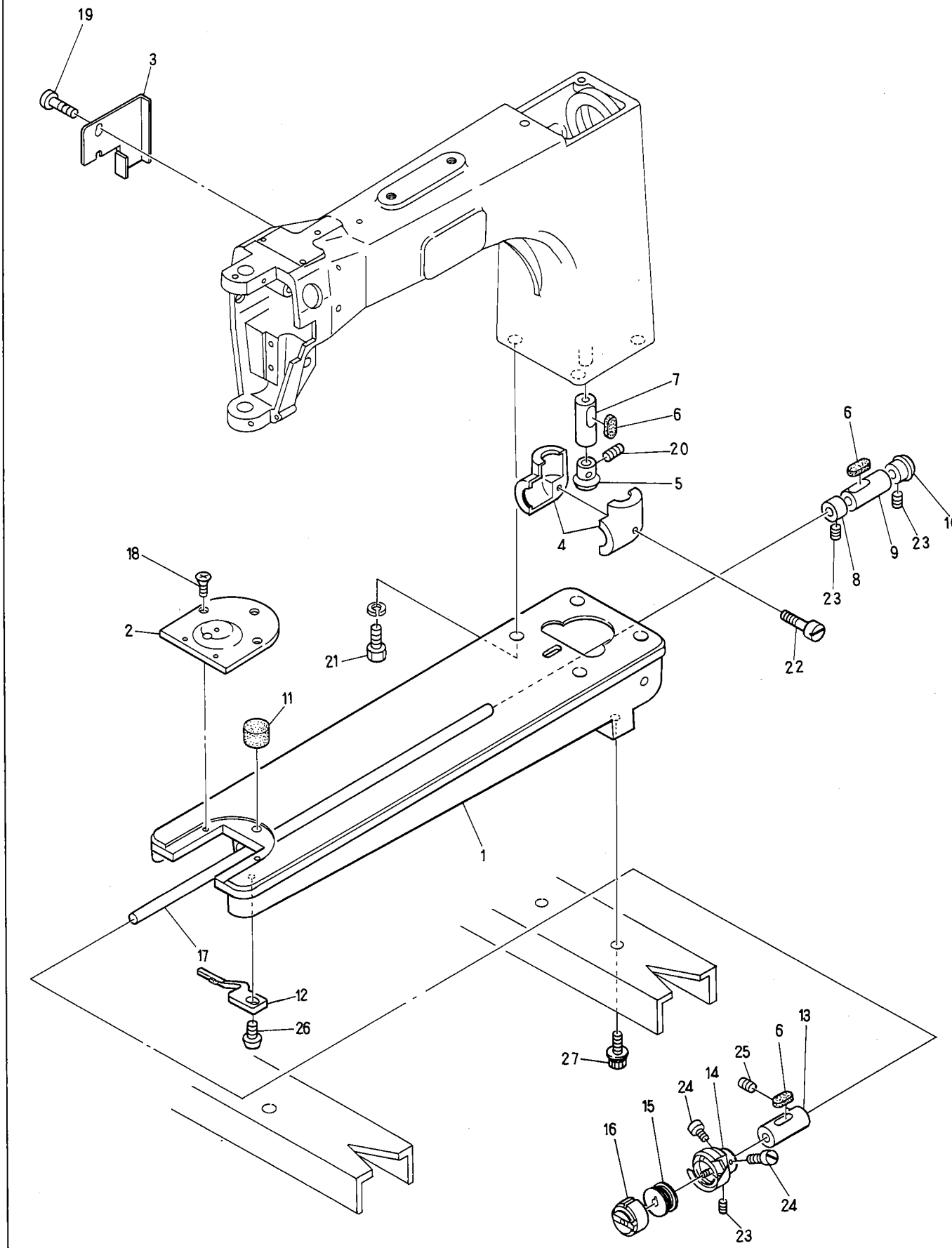
19
3
7
6
20
5
4
6
10
23
9
8
23
22
18
2
21
11
1
17
12
26
27
13
6
25
14
24
15
16
24
23

③Bed a'ssy

(H=Head Q'TY)

ITEM	LIST No.	DESCRIPTION	Q'TY	REMARK
1	KN210210	Bed	H×1	For small bobbin
	KB210180	Bed	H×1	For middle bobbin
2	KN250131	Needle plate	H×1	
3	KL250051	Arm side cable cover	H×1	
4	KF220271	Gear cover set	H×1	
5	KF220470	Bevel gear (Vertical shaft lower)	H×1	
6	KL220140	Oil felt C	H×3	
7	KL220060	Vertical shaft metal (lower)	H×1	
8	KF220290	Bottom shaft collar	H×1	
9	KL220070	Bottom shaft metal (Rear)	H×1	
10	KF220480	Bevel gear (Bottom shaft)	H×1	
11	KL220120	Oil felt A	H×1	
12	KF220511	Rotating hook bobbin case holder position bracket	H×1	
13	KF220230	Bottom shaft metal (Front)	H×1	
14	KF220750	Rotating hook complete KHS 12-RYNW	H×1	For small bobbin
	HB220010	Rotating hook complete (HSM-A-MQTS)	H×1	For middle bobbin
15	KF220410	Bobbin	H×1	For small bobbin
	KF220421	Bobbin HSM(DBM)	H×1	For middle bobbin
16	KF220440	Bobbin case (SC35-NS)	H×1	For small bobbin
	KF220302	Bobbin case BC-DBM(Z2)-NBL5	H×1	For middle bobbin
17	KC220210	Bottom shaft	H×1	
18	KF250900	Needle plate set screw (SM11/64 40×7)	H×2	
19		Binding screw M4×8		
20		Screw (SM1/4 40×4)		
21		Hex. bolt M12×35		
22		Screw M5×25		
23		Screw (SM11/64 40×4)		
24		Screw (SM11/64 40×5)		
25		Hex. socket set screw M6×8		
26		Screw (SM11/64 40×10)		
27		Hex. socket screw M8×22(With plain washer, Spring washer)		

④ Automatic thread cutting mechanism I
(Thread cutting section)

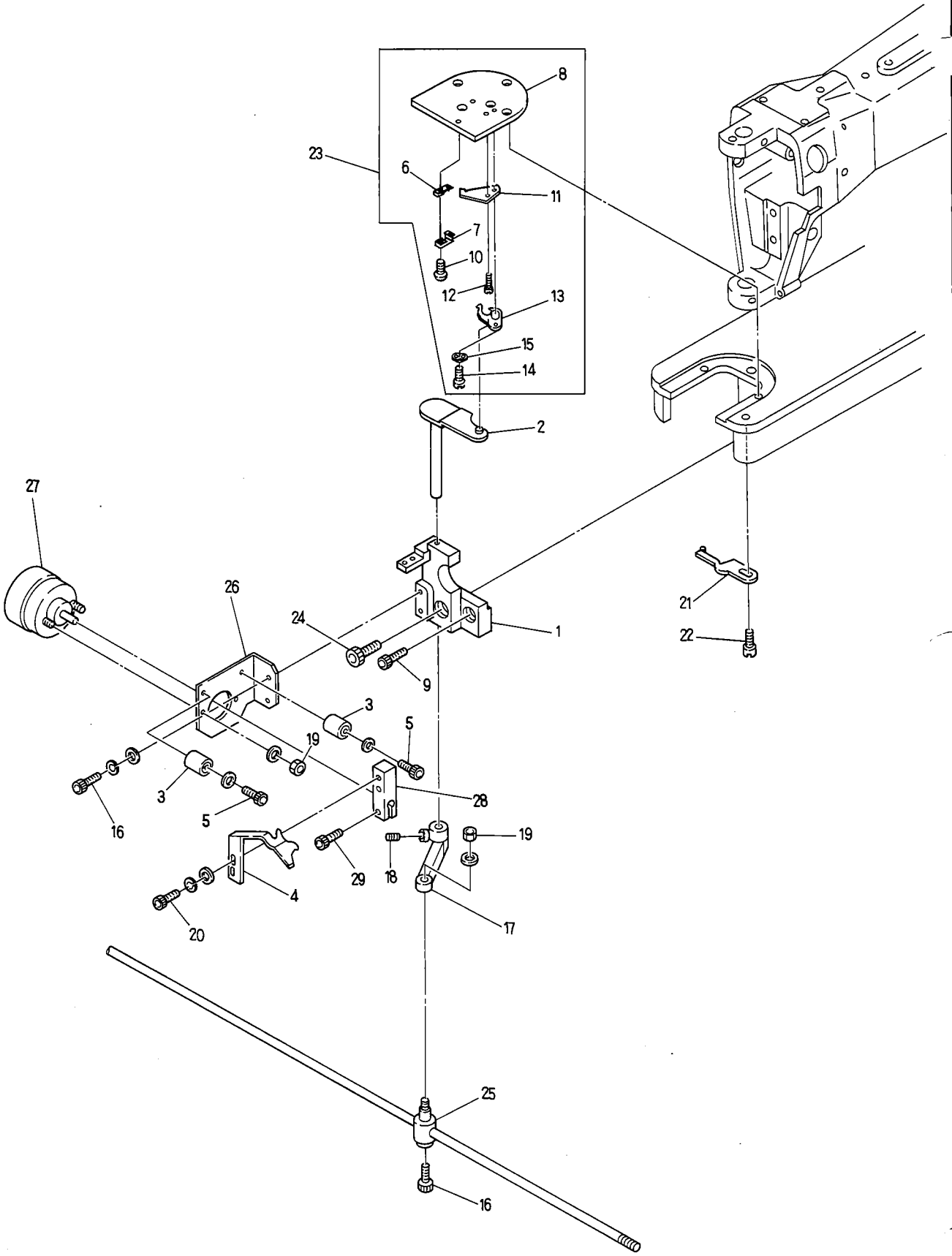

④ Automatic thread cutting mechanism I (Thread cutting section)

(H=Head Q'TY)

ITEM	LIST No.	DESCRIPTION	Q'TY	REMARK
1	KN271521	Thread knife bracket	H×1	For small bobbin
	HP272550	Thread knife bracket (Middle bobbin)	H×1	For middle bobbin
2	KN271980	Lower knife driving lever	H×1	For small bobbin
	HP272560	Lower knife driving lever (Middle bobbin)	H×1	For middle bobbin
3	KN272400	Stopper eccentric	H×2	
4	KN271644	Needle thread hook	H×1	
5		Hex. socket bolt M4×20		
6	HT270160	Bobbin thread support stay (Upper) CMP	H×1	
7	HT270180	Bobbin thread support stay (Lower) CMP	H×1	
8	KN250131	Throat plate (For thread cutter)	H×1	
9		Hex. socket bolt M6×20 (With spring washer)		
10		Round screw M3×3		
11	KN270961	Fixed knife	H×1	
12	KC270980	Fixed knife set screw	H×1	
13	KN270952	Driving knife	H×1	
14	KC270970	Lower knife turret shaft	H×1	
15	A9013066	Wave washer (WW-5) (SK)	H×1	
16		Hex. socket bolt M4×8		
17	KN271560	Knife lever	H×1	
18		Hex. socket set screw M5×6		
19		Hex. nut M4		
20		Hex. socket bolt M3×10		
1	KF220511	Bobbin holder	H×1	
22		Screw (SM11/64 40×12)		
23	KN272002	Throat plate (For thread cutting) CMP	H×1	
24		Hex. socket bolt M6×35 (With spring washer)		
25	KF230640	Lock connecting bar clamp	H×1	
26	KN271620	Solenoid stay	H×1	For small bobbin
	HP272570	Solenoid stay (For middle bobbin)	H×1	For middle bobbin
27	A9056010	Rotary solenoid (4EL25-33×3×8×9)	H×1	
28	KN271630	Solenoidc lever	H×1	
29		Hex. socket bolt M4×10		

⑤ Take up lever a'ssy

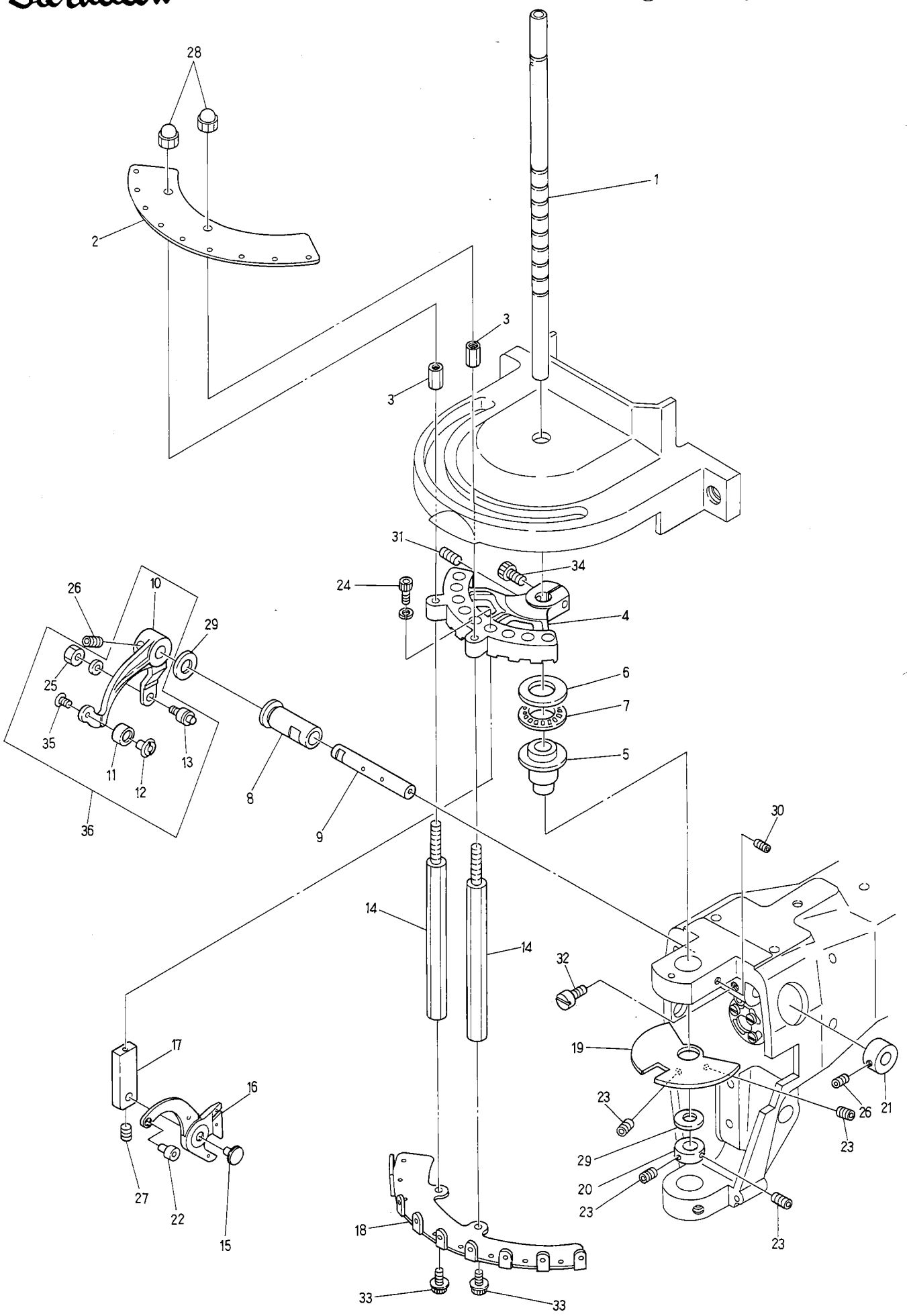

⑤ Take up lever a'ssy

(H=Head Q'TY)

ITEM	LIST No.	DESCRIPTION	Q'TY	REMARK
1	KB230161	Driving shaft	H×1	
2	HT240000	Thread guide plate	H×1	
3	KB240021	Thread guide fixing collar	H×2	
4	KT230020	Take up fixing bracket	H×1	
5	KB230090	Driving shaft upper metal	H×1	
6	A9011152	Thrust needle bearing innerring (WS1528)	H×1	
7	A9011021	Thrust bearing NTB−1528	H×1	
8	KB230100	Take up lever driving shaft metal	H×1	
9	KB230110	Take up lever driving shaft	H×1	
10	KT230030	Take up lever driving lever	H×1	
11	HT230090	Take up lever driving roller	H×1	
12	HT230100	Take up lever driving roller shaft	H×1	
13	KF230500	Take up lever roller a'ssy	H×1	
14	KB240010	Thread guide fixing rod	H×2	
15	HT230080	Take up lever shaft	H×9	
16	KT230040	Take up lever a'ssy	H×9	
17	KT230010	Take up lever base	H×9	
18	HT240010	Thread hanger	H×1	
19	KT230000	Take up lever sttocker	H×1	
20	HB230160	Driving shaft set collar	H×1	
21	HB230270	Needle bar driving lever fixing pin set collar	H×1	
22	HB230750	Take up lever thread ceramic	H×9	
23		Hex. socket set screw M4×4 (With adhesion)		
24		Hex. socket bolt M3×14		
25		Hex. nut SM7/32		
26		Hex. socket set screw M5×6 (With adhesion)		
27		Hex. socket set screw M3×4 (With adhesion)		
28		Cap nut M4		
29	A9012164	Thrust washer (R−TW0851)	H×2	
30		Hex. socket set screw M6×6		
31		Hex. socket set screw M4×5 (C,P)		
32		Screw (SM11/64×11)		
33		Hex. socket bolt M4×6 (With adhesion)		
34		Hex. socket bolt M4×15		
35	HB230650	Flush screw (With adhesion)	H×1	
36	KT230050	Take up lever drive lever a'ssy	H×1	

(IE)1.100

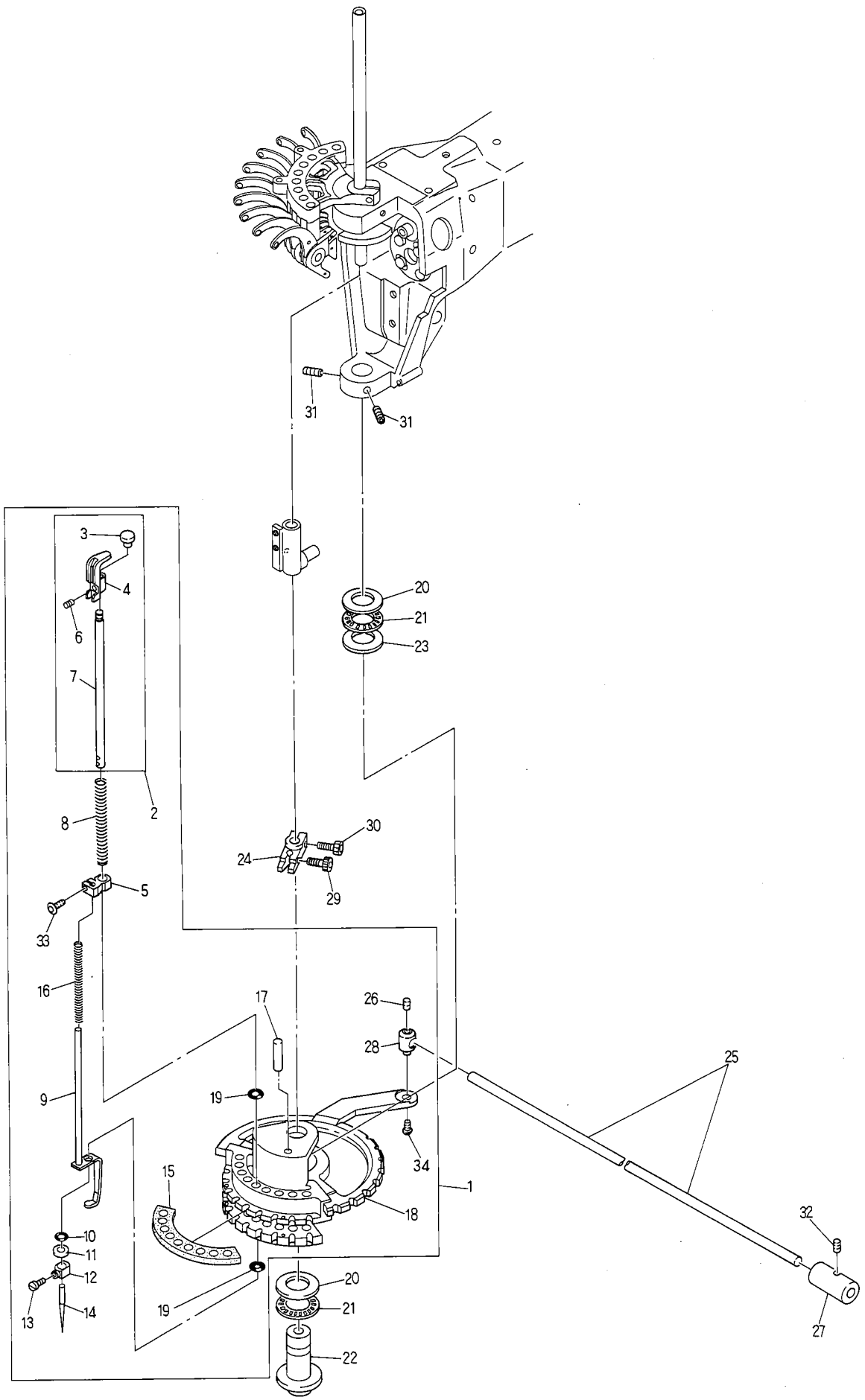
31
31
3
4
6
7
2
8
5
33
16
9
10
11
12
13
14
20
21
23
30
24
29
17
26
28
25
19
34
15
1
18
32
27
20
21
19
22

⑥ Needle bar mechanism I

(H=Head Q'TY)

ITEM	LIST No.	DESCRIOTION	Q'TY	REMARK
1		Turret plate a'ssy	H×1	
2	HT230190	Needle bar a'ssy	H×9	
3	HT230130	Needle bar cap	H×9	
4	HT230151	Needle bar guide	H×9	
5	HT230051	Cloth winder stop latch set clamp	H×9	
6		Hex. socket set screw M4×4		
7	HT230041	Needle bar	H×9	
8	HT230251	Needle bar spring (Upper)	H×9	
9	HT230141	Pressure foot	H×9	
10	KF230910	O-Ring (L)	H×9	
11	KF230930	Spacer	H×9	
12	KF230230	Needle clamp	H×9	
13	KF230240	Needle clamp screw (SM9/64 40)	H×9	
14	KF230250	Needle (DBK5-11)	H×9	
15	HT230110	Turret plate oil pad	H×1	
16	HT230062	Needle bar spring (Lower)	H×9	
17	A9012291	Parallel pin φ5×14L	H×1	
18	HT230000	Turret plate	H×1	
19	A9014055	O-Ring (S)	H×18	
20	A9011023	Thrust bearing outer (GS1528)	H×2	
21	A9011021	Thrust bearing (NTB-1528)	H×2	
22	HB230140	Driver shaft under metal	H×1	
23	A9011022	Thrust washer	H×1	
24	HB230170	Driver shaft set plate	H×1	
25	KC330410	Lock connecting rod (L=2000)	(4)	
26		Hex. socket set screw M4×4		
27	KF330381	Lock bar hand grip	(2)	
28	HT230180	Turret plate joint pin	H×1	
29		Hex. socket bolt M3×12 (With adhesion)		
30		Hex. socket bolt M4×12		
31	A9012053	Hex. socket set screw M6×0.75×8	H×2	
32		Hex. socket set screw M5×5		
33		Hex. socket button bolt M3×8		
34		Hex. socket button bolt M4×5		

(IE)1.100

⑦ Needle bar mechanism II

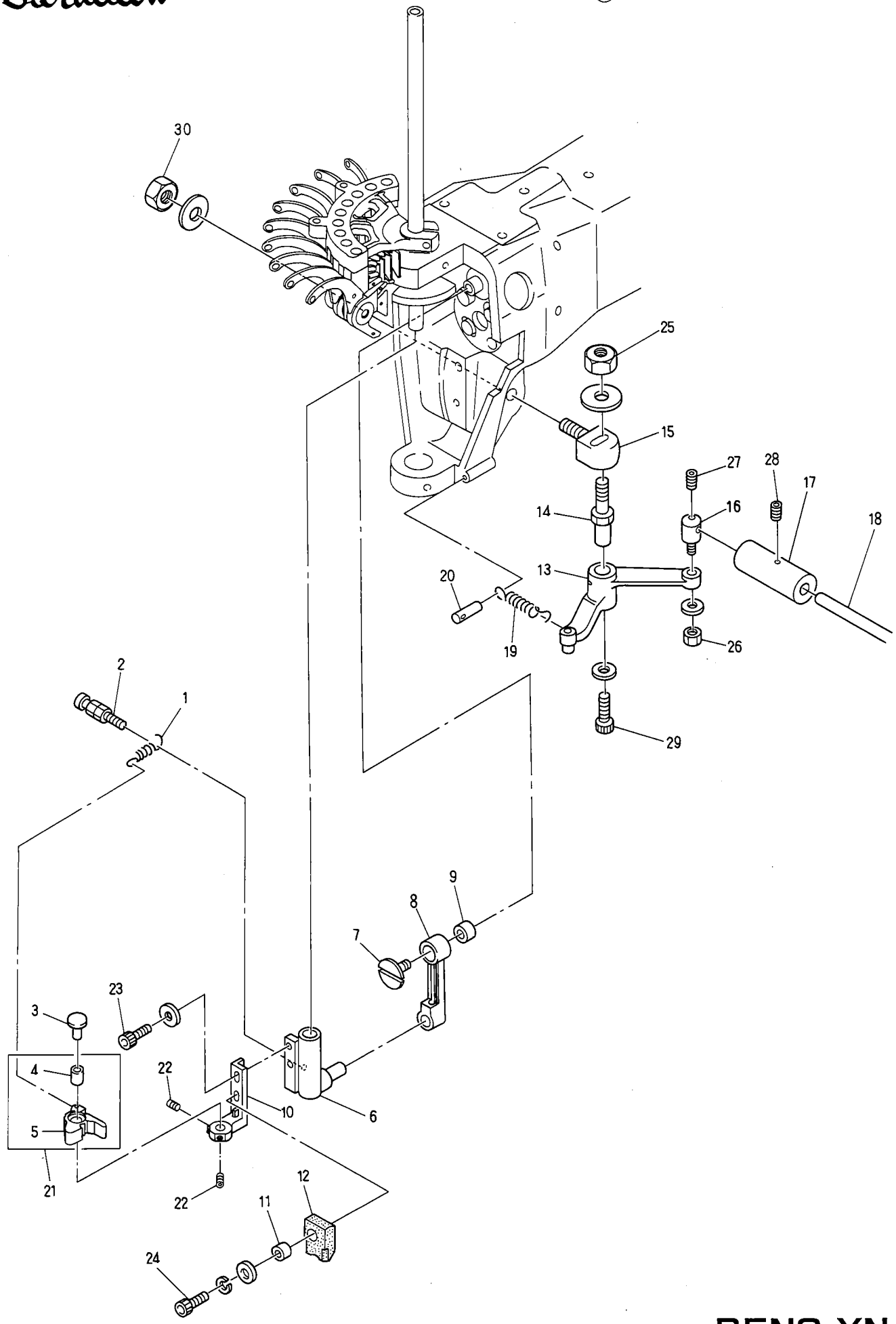

⑦ Needle bar mechanism Ⅱ

(H=Head Q'TY)

ITEM	LIST No.	DESCRIPTION	Q'TY	REMARK
1	HB230401	Needle bar driver return spring	H×1	
2	HB230590	Set screw for return spring	H×1	
3	HB230390	Needle bar driver fixing	H×1	
4	A9012190	DU-Bush (MB0606DU)	H×1	
5	HB230383	Needle bar driver	H×1	
6	KB230080	Needle bar driver guide block	H×1	
7	KB230070	90° Crank left-handed screw	H×1	
8	KB230060	Crank rod	H×1	
9	A9011115	Needle bearing (K9×12×10T2)	H×1	
10	HB230372	Needle bar driver fixing base	H×1	
11	HB230420	Needle bar driver stopper set collar	H×1	
12	HB230414	Needle bar driver stopper	H×1	
13	KL230280	Lock lever (With roller)	H×1	
14	KF230630	Lock lever shaft	H×1	
15	KF230650	Lock lever bracket	H×1	
16	KF230640	Lock connecting bar clamp	H×1	
17	KF330381	Lock bar hand grip	2	
18	KC330410	Lock connecting rod (L=2000)		
19	KF230661	Lock lever spring	H×1	
20	KF230670	Lock lever spring pin	H×1	
21	HT230201	Needle bar driver (a'ssy)	H×1	
22		Hex. socket set screw M4×4 (With adhesion)		
3		Hex. socket bolt M4×12		
24		Hex. socket bolt M4×15		
25		Hex. nut M8		
26		Hex. nut M4		
27		Hex. socket set screw M4×6		
28		Hex. socket set screw M4×5		
29		Hex. socket bolt M5×10		
30		Hex. nut M10		

(IE)1.100

⑧ Jump mechanism

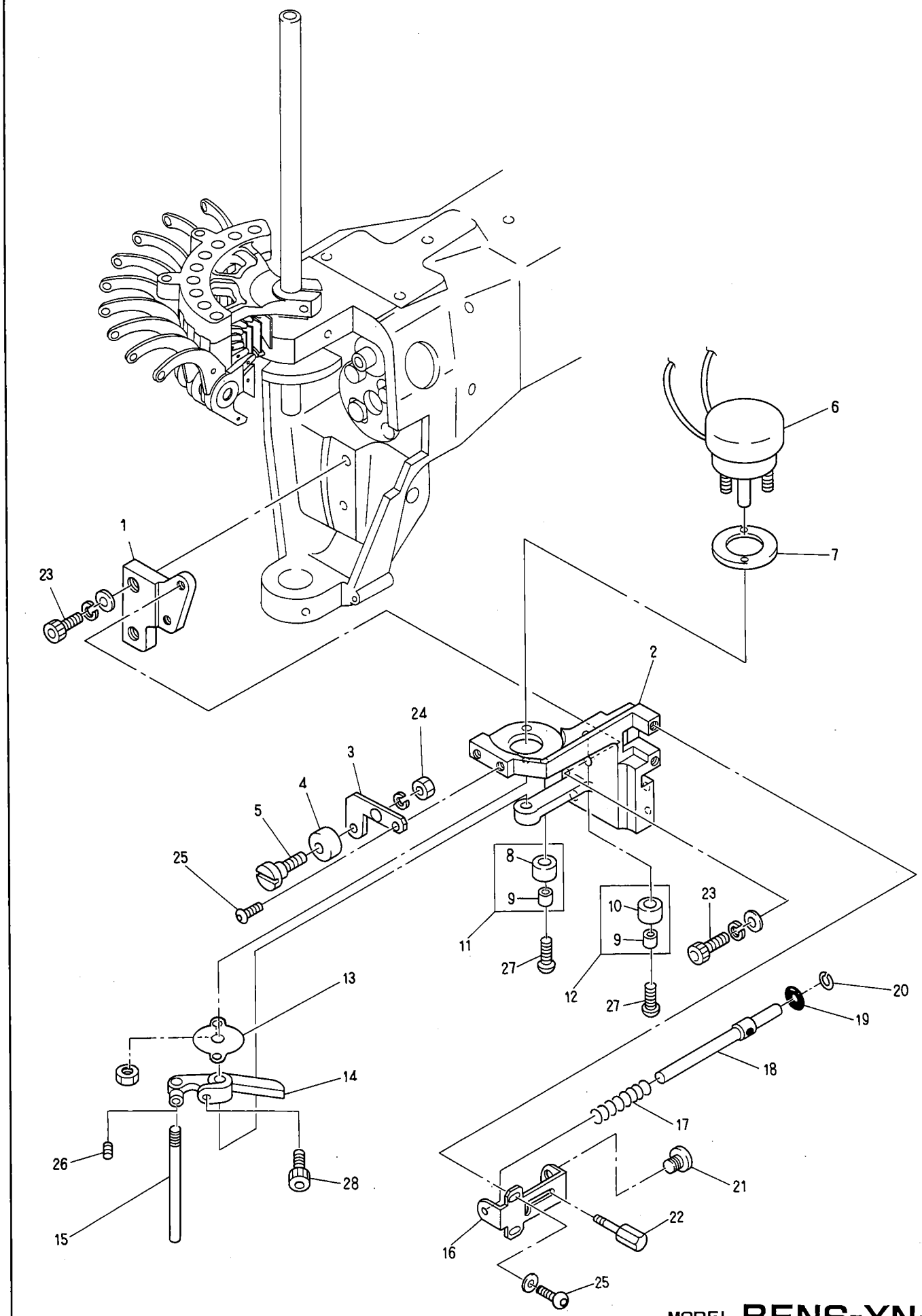

MODEL **BENS-YN**

⑧ Jump mechanism

(H=Head Q'TY)

ITEM	LIST No.	DESCRIPTION	Q'TY	REMARK
1	KB210170	Solenoid bracket fixing base	H×1	
2	KB240030	Jump solenoid fixing bracket	H×1	
3	KB230170	Needle bar stopper fixed bracket	H×1	
4	HB230470	Needle bar stopper	H×1	
5	HB230460	Needle bar stopper fixed pin	H×1	
6	A9056020	Rotary solenoid (3ER35×3×8×9, L=45)	H×1	
7	HB230560	Sheet for rotary solenoid	H×1	
8	HB240310	Eccentric collar (φ12)	H×1	
9	HB240040	Stopper eccentric	H×2	
10	HB240050	Eccentric collar (φ11)	H×1	
11	HB240340	Stopper eccentric a'ssy (φ12)	H×1	
12	HB240330	Stopper eccentric a'ssy (φ11)	H×1	
13	HB230580	Solenoid prevention noise cover	H×1	
14	HB240020	Jump solenoid lever	H×1	
15	HB240030	Jump solenoid lever pin	H×1	
16	KB240040	Cancel bracket	H×1	
17	HB240110	Cancel return spring	H×1	
18	HB240070	Cancel rod	H×1	
19	A9014051	O-Ring P−5	H×1	
20	A9012051	E-Ring (φ6)	H×1	
21	HB240090	Cancel rod guide	H×1	
22	HB240080	Manual cancel pin	H×1	
23		Hex. socket bolt M4×12		
24		Hex. nut M4		
25		Hex. socket button bolt M4×10		
26		Hex. socket set screw M4×4 (With adhesion)	H×1	
27		Hex. socket button bolt M4×12 (With adhesion)	H×2	
28		Hex. socket bolt M4×8		

⑨ Thread guide mechanism

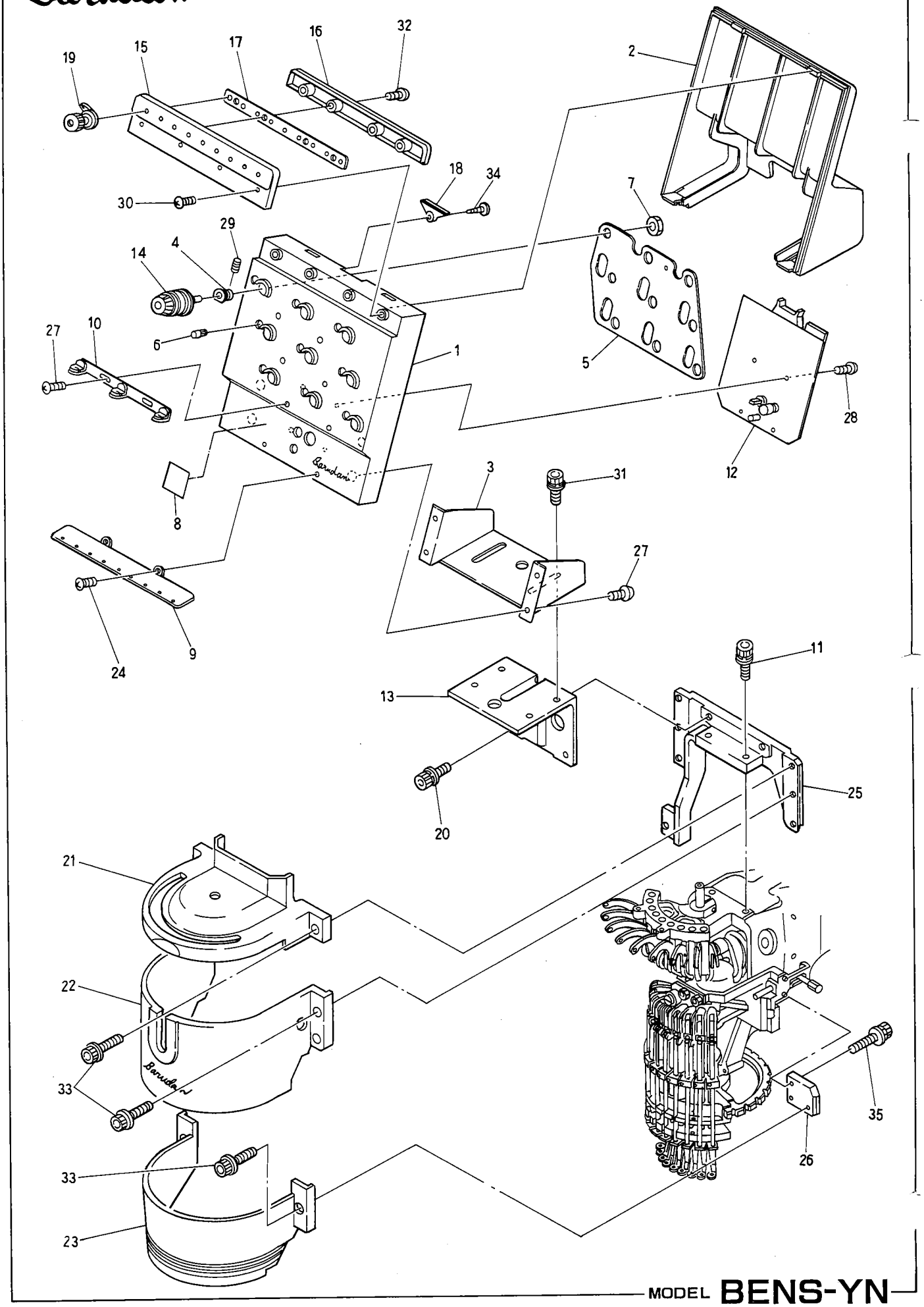

⑨ Thread guide mechanism

(H=Head Q'TY)

ITEM	LIST No.	DESCRIPTION	Q'TY	REMARK
1	HT240120	Tension base case	H×1	
2	HT240130	Tension base cover	H×1	
3	HT240140	Tension base	H×1	
4	HT240150	Base	H×9	
5	HT240160	Tension earth plate	H×1	
6	HT240170	Upper thread detection pin	H×9	
7	HT240180	SM-Nut	H×9	
8		No. Label	H×1	
9	HT240020	Second thread guide plate	H×1	
10	HT240060	First thread guide	H×3	
11		Hex. socket bolt M5×20		
12	EBY01100	4619 Head board	H×1	
13	KB240051	Tension base bracket [Maruchi (MS)]	H×1	
14	HT240320	Dial type tension unit complete (YN)	H×9	
15	HT240210	Upper thread guid fixing case	H×1	
16	HT240220	Upper thread guid fixing cover	H×1	
17	HT240230	Upper thread guid fixing base	H×1	
18	HT240240	Blind cap	H×1	
19	HT240330	Thread guide for upper tension	H×9	
20		Hex. socket bolt M5×15 (With plain washer, Spring washer)		
21	KB250020	Sewing head cover (A)	H×1	
22	KB250030	Sewing head cover (B)	H×1	
3	KB250040	Sewing head cover (C)	H×1	
24		Tapping truss screw M4×10		
25	KB250050	Sewing head cover fixing bracket	H×1	
26	KB250060	Sewing head cover fixing stay	H×1	
27		Truss screw M4×10		
28		Pan head tapping screw M3×8		
29		Hex. socket set screw M4×12		
30		Pan screw M3×6		
31		Hex. socket bolt with washer M5×10		
32		Tapping screw II M3×12		
33		Hex. socket bolt M4×6 (With plain washer, Spring washer)		
34		Tapping screw M3×12		
35		Hex. socket bolt M4×15 (With plain washer, Spring washer)		

⑩ Automatic thread cutting mechanism Ⅱ
(Thread away section)

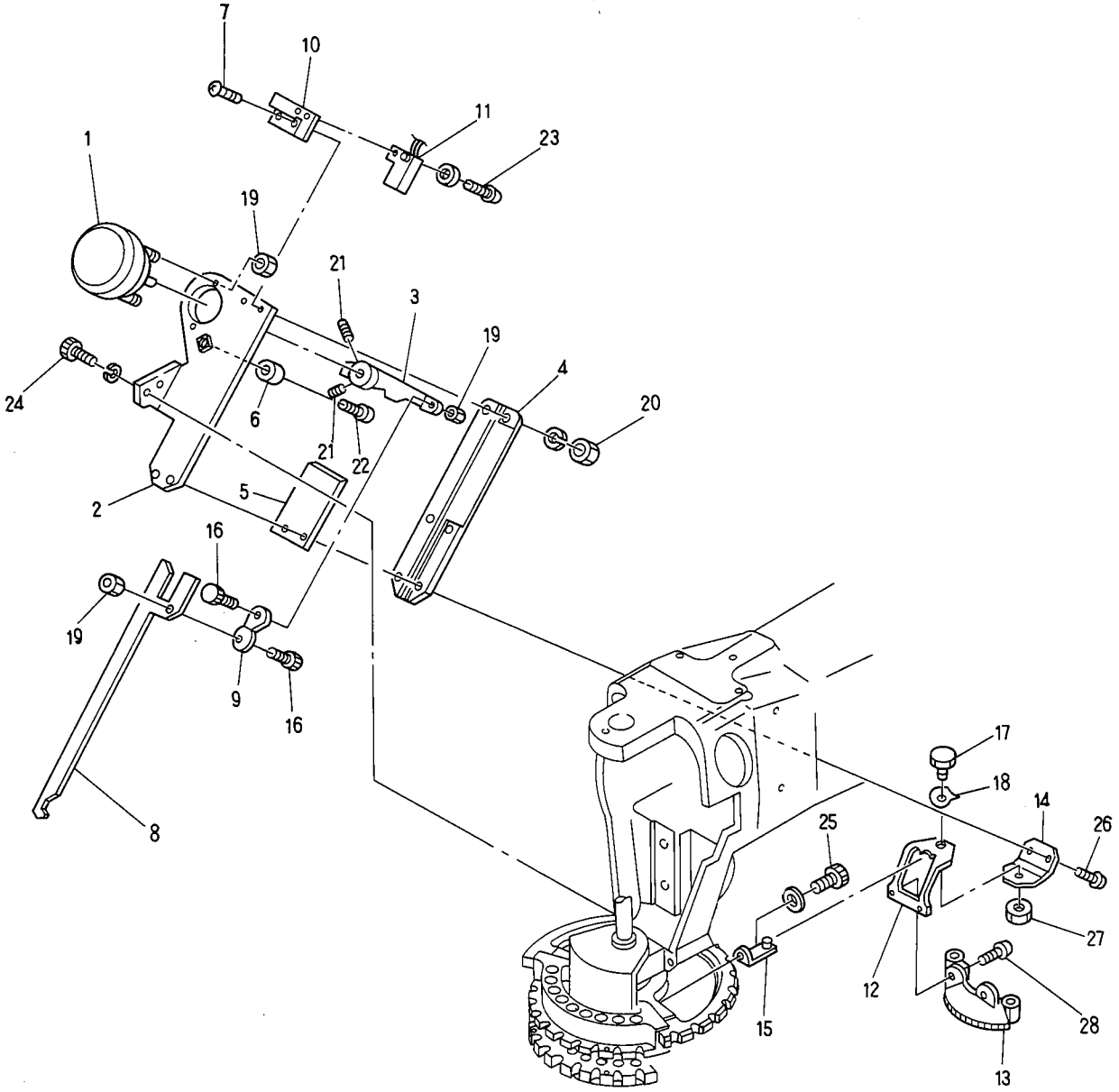

⑩ Automatic thread cutting mechanism Ⅱ (Thread away section)

(H=Head Q'TY)

ITEM	LIST No.	DESCRIPTION	Q'TY	REMARK
1	A9056018	Rotary solenoid (4ER67.5-34×8 ×9) Orange	H×1	
2	KL270081	Thread away base	H×1	
3	KL270110	Thread away solenoid lever	H×1	
4	KL270091	Thread away hook guide	H×1	
5	KL270450	Hook guide plate	H×1	
6	KL272400	Stopper eccentric	H×1	
7		Truss screw M3×10		
8	KL270101	Thread away hook	H×1	
9	KL270120	Connecting plate	H×1	
10	KL270260	Switch stay	H×1	
11	A9052028	Proximity switch (RS-603)	H×1	
12	KL270430	Thread hanger plate fixing stay	H×1	
13	KL270400	Thread hanger plate CMP	H×1	
14	KL270440	Rotary shaft fixing stay	H×1	
15	KL270420	Thrad hanger driving pin	H×1	
16	KL270130	Lever connecting pin	H×2	
17	KL270410	Thread hanger plate rotary shaft	H×1	
18	A9013045	Wave washer (WW5)	H×1	
19		Hex. nut M4		
20		Hex. nut M3		
21		Hex. socket set screw M4×8		
22		Truss screw M4×16		
3		Truss screw M3×6		
24		Hex. socket bolt M4×12		
25		Hex. socket bolt M3×8		
26		Truss screw M3×7		
27		Hex. nut M3		
28		Truss screw M3×4		

(IE)1.100

⑪ Automatic thread cutting mechanism Ⅲ
(Thread support section)

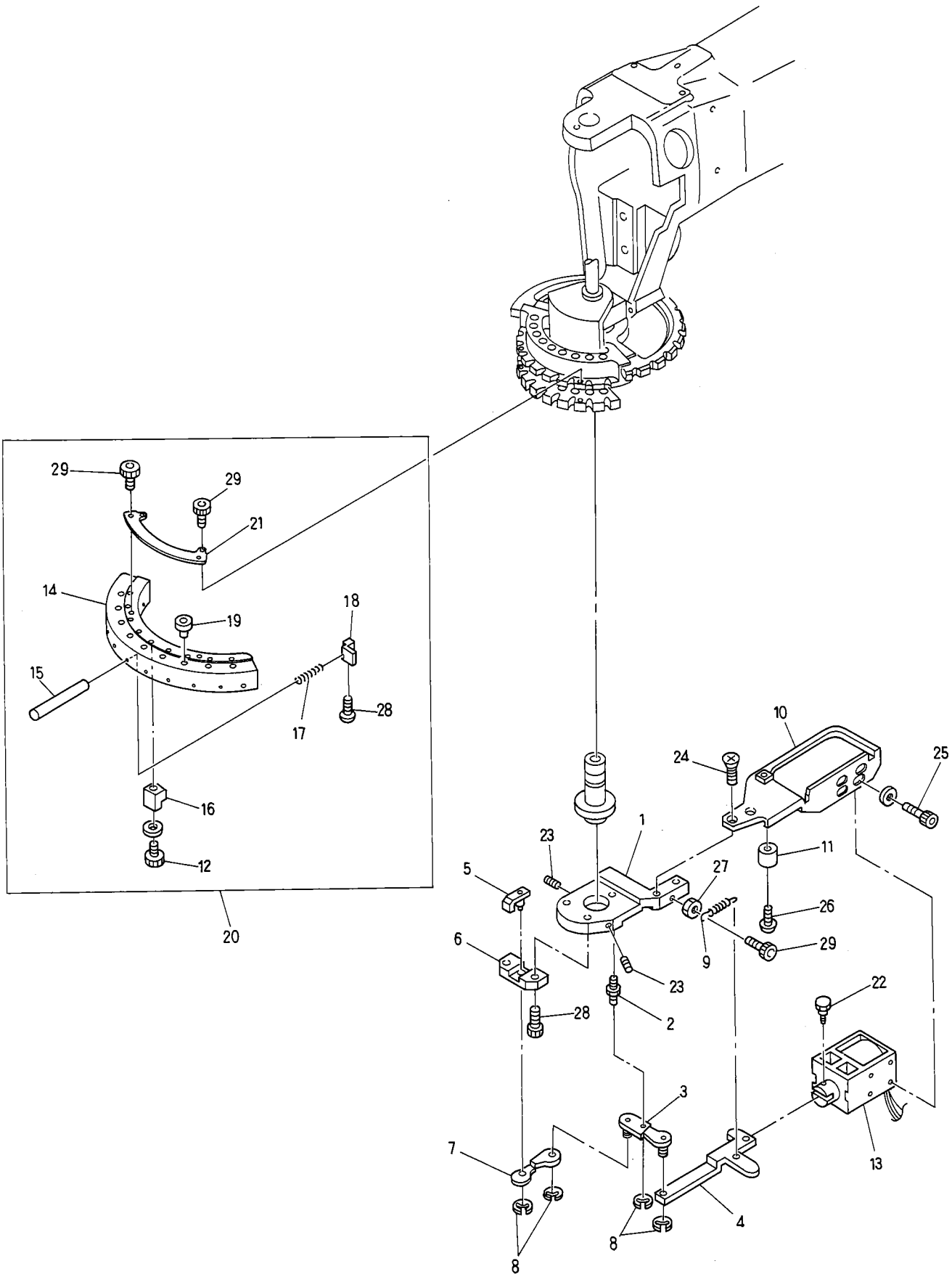

⑪ Automatic thread cutting mechanismⅢ(Thread support section)

(H=Head Q'TY)

ITEM	LIST No.	DESCRIPTION	Q'TY	REMARK
1	KL270000	Fixing base	H×1	
2	KL270040	Lever turret	H×1	
3	KL270050	Solenoid lever	H×1	
4	KL270060	Lever connecting plate	H×1	
5	KL270020	Thread support slider	H×1	
6	KL270010	Slide base	H×1	
7	KL270030	Driving plate	H×1	
8	A9012056	E-Ring φ3	H×1	
9	KL270520	Return spring	H×1	
10	KL270070	Solenoid stay	H×1	
11	KN272400	Stopper eccentric	H×1	
12		Hex. socket bolt M3×10		
13	A9056013	Keep solenoid (TDS-K10SL)	H×1	
14	HT270001	Thread support apron	H×1	
15	HT270040	Thread support shaft	H×9	
16	KC270292	Thread support block	H×9	
17	KC270271	Support spring	H×9	
18	HT270020	Thread support clamp	H×9	
19	KF230580	Take up lever ceramic	H×9	
20	HT270030	Thread support apron a'ssy	H×1	
21	HT270010	Thread support apron fixing stay	H×1	
22	KC270101	Solenoid pin	H×1	
3		Hex. socket set screw M4×8		
24		Flush screw M4×8		
25		Hex. socket bolt M3×6		
26		Truss screw M4×16		
27		Hex. nut M4		
28	HT270061	Hex. socket button bolt M3×6	H×9	
29		Hex. socket bolt (Planting) M3×6	H×4	

⑫ Automatic thread cutting mechanism Ⅳ
(Thread cutting drive section)

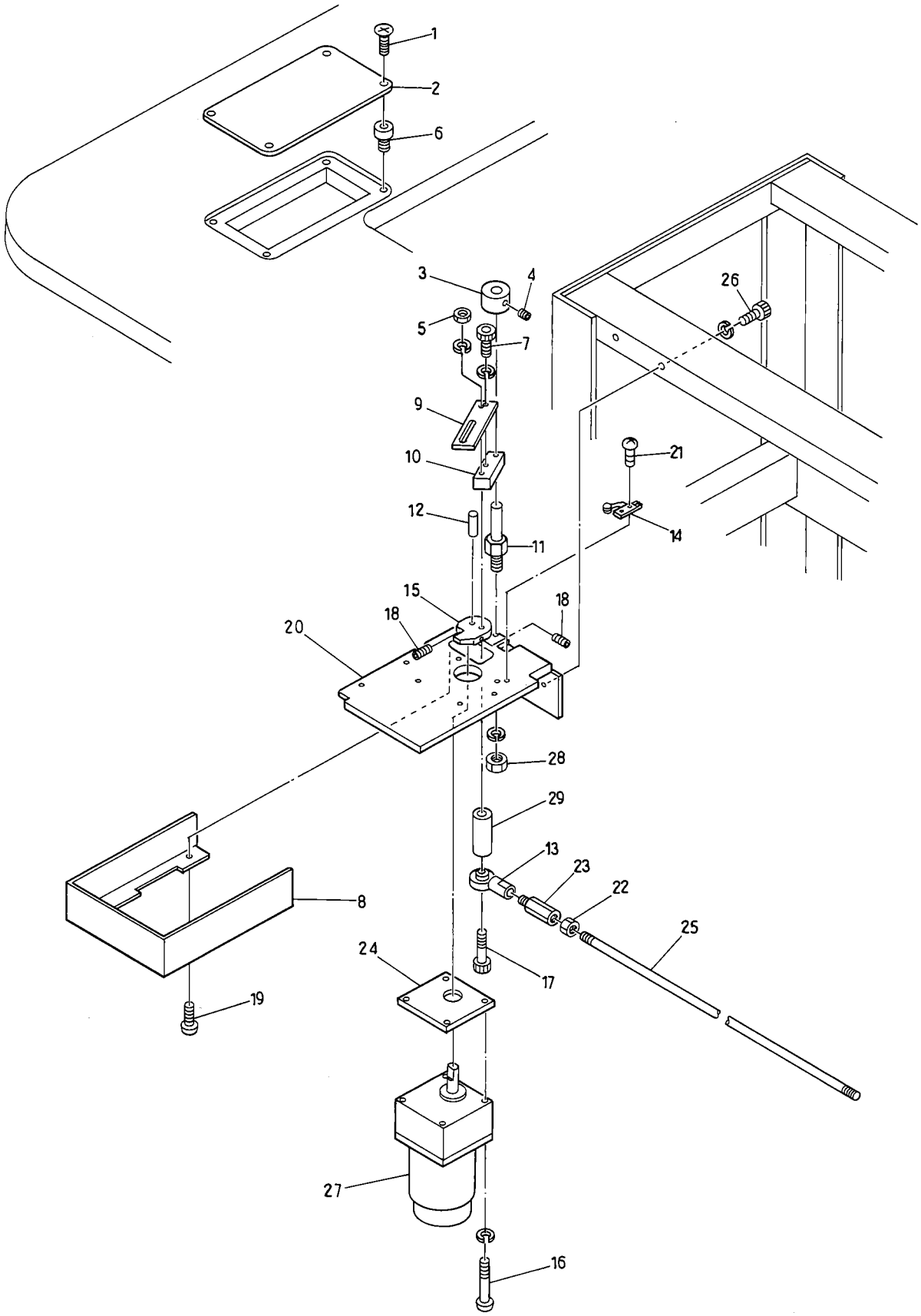

⑫ Automatic thread cutting mechanismⅣ (Thread cutting drive section)

ITEM	LIST No.	DESCRIPTION	Q'TY	REMARK
1		Flush screw M4×8 (Under cut)		
2	KC271440	Drive service cover	1	
3	KC330180	Collar φ10	1	
4		Hex. socket set screw M5×6		
5		Hex. nut M6		
6		Rag nut (C) M4		
7		Hex. socket bolt M6×15		
8	KN271712	Motor bracket cover	1	
9	KN271990	Motor lever	1	
10	KN271781	Drive lever	1	
11	KN271750	Motor lever turret shaft	1	
12	KN272350	Parallel pin φ6 (L=35)	1	
13	A9012002	Uniball joint (PR-6)	1	
14	A9052005	Micro switch (V-01L2255)	1	
15	KN271732	Drive cam	1	
16		Pan screw M5×65		
17		Hex. socket bolt M6×55		
18		Hex. socket set screw M5×8		
19		Truss screw M3×6		
20	KN271700	Motor bracket	1	
21		Truss screw M3×15		
22		Hex. nut M5		
23	HH330760	Hex. connecting bar	1	
24	KN271720	Motor spacer	1	
25	KC330410	Lock connecting rod (2M)	2	
26		Hex. socket bolt M8×20		
27	A9065028	Reverside motor RM-F7A12PEAA (7RHD30)	1	
28		Hex. nut M8		
29	KN271800	Drive lever collar	1	

⑬ Color change mechanism I

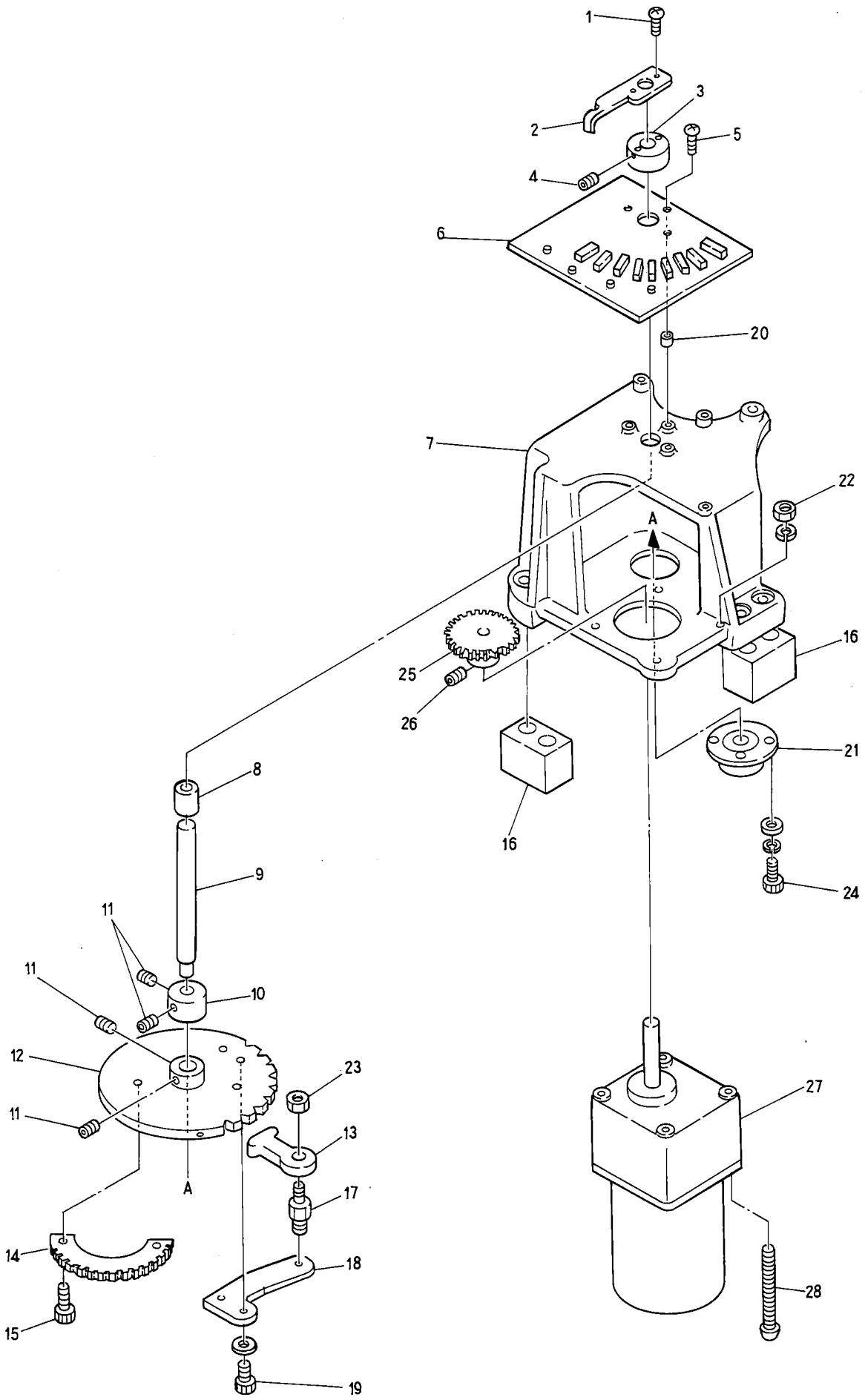

⑬ Color change mechanism I

ITEM	LIST No.	DESCRIPTION	Q'TY	REMARK
1		Truss screw M3×6		
2	KC330280	Needle bar detection plate		
3	KC330170	Detection plate collar	1	
4		Hex. socket set screw M5×10		
5		Truss screw M3×12		
6	EBY01120	3760 Needle positioner	1	
7	KC330180	Needle turning unit base	1	
8	KC330190	Oil-less metal	1	
9	KC330161	Needle turning shaft	1	
10	KC330180	Collar φ10	1	
11		Hex. socket set screw M5×6		
12	KT330000	Control turning plate	1	
13	A9012001	Uniball joint (RD4020R)	1	
14	KG330220	Needle turning gear No.2	1	
15		Hex. socket bolt M5×12		
16	KL330050	Unit base spacer	2	
17	KF230360	Turret plate joint pin	1	
18	KL330040	Turret plate lever	1	
19		Hex. socket bolt M5×15		
20	A9012208	Spacer 5×4	3	
21	KC330610	Oil-less bearing (OCHIAI) S/S LS B-G8-080V	1	
22		Hex. nut M4		
3		Hex. nut M5		
24		Hex. socket bolt M4×12		
25	KC330210	Needle turning gear No.1 (0.8M50T)	1	
26		Hex. socket set screw M4×8		
27	A9065035	Gear motor RM-F6A5PC3R163-120	1	
28		Oval countersunk screw M4×65		

(IE)1.100

⑭ Color change mechanism Ⅱ

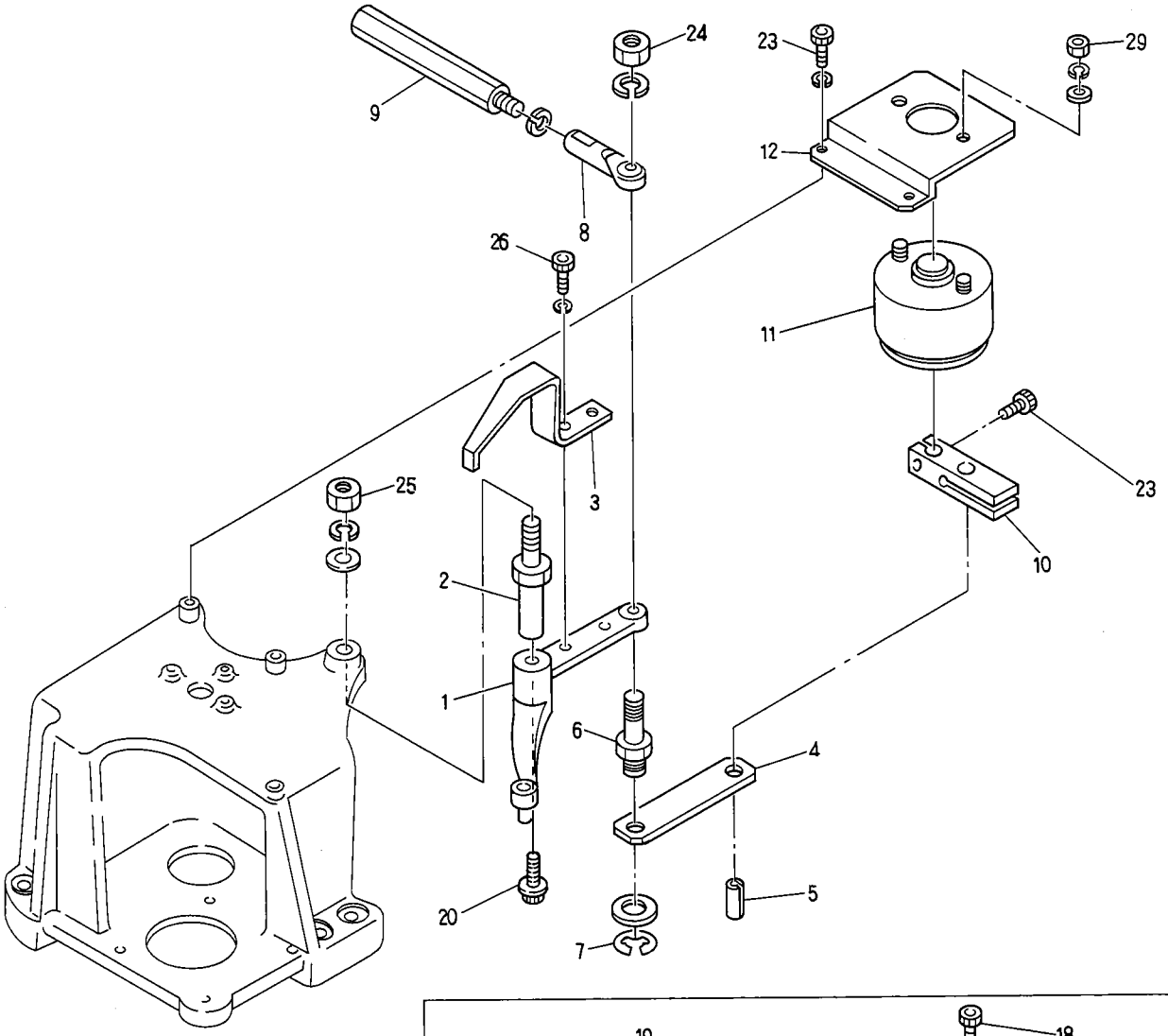

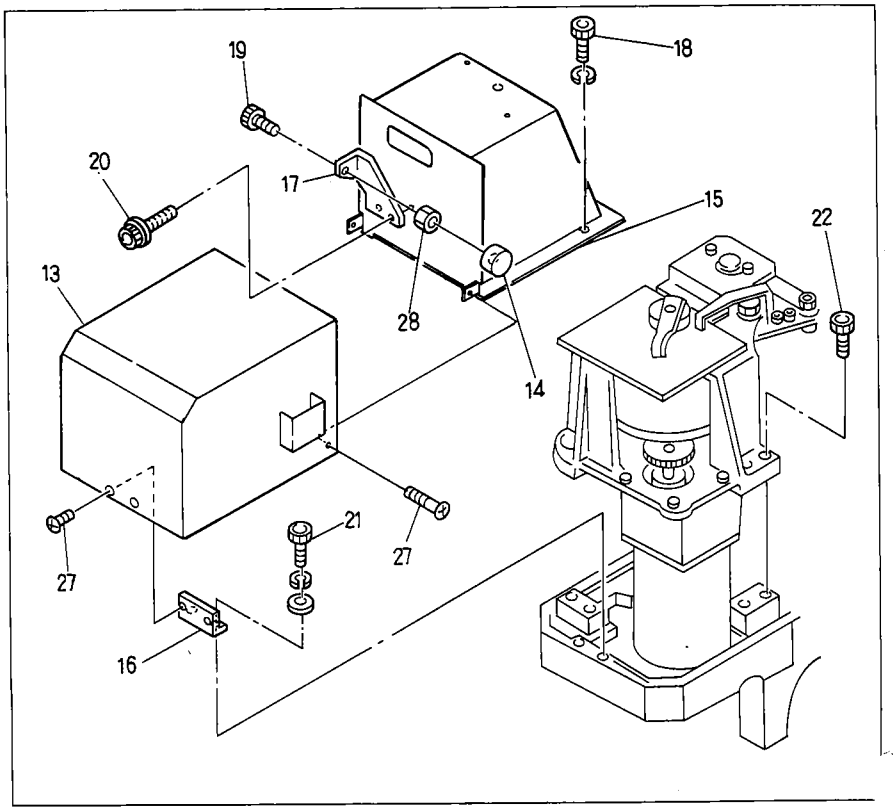

⑭ Color change mechanism Ⅱ

ITEM	LIST No.	DESCRIPTION	Q'TY	REMARK
1	KG230610	Lock lever	1	
2	KF230630	Lock lever shaft	1	
3	KC330290	Lock detection plate	1	
4	KN330250	Lock lever link	1	
5	A9012143	Spring pin φ6 L=12	1	
6	KC330230	Lock lever pin	1	
7	A9012137	Snap ring φ8	1	
8	A9012002	Uniball joint (PR-6)	1	
9	KC330510	Hex. connecting bar (L)	1	
10	KN330240	Lock solenoid lever	1	
11	KC330850	Rotary solenoid 6SR-25(27×4 ×9) L=15	1	
12	KC330260	Rotary solenoid bracket	1	
13	KV330020	Cover ASSY	1	
14	KN121350	Needle bar cap	1	
15	KV330010	Automat base	1	
16	KC330910	Cover bracket	1	
17	KL330020	Lock lever stopper	1	
18		Hex. socket bolt M6×12		
19		Hex. socket bolt M5×30		
20		Hex. socket flang bolt M5×4		
21		Hex. socket bolt M5×10		
22		Hex. socket bolt M6×60		
23		Hex. socket bolt M5×12		
24		Hex. nut M6		
25		Hex. nut M8		
26		Hex. socket bolt M4×8		
27		Truss screw M4×6		
28		Hex. nut M5		
29		Hex. nut M4		

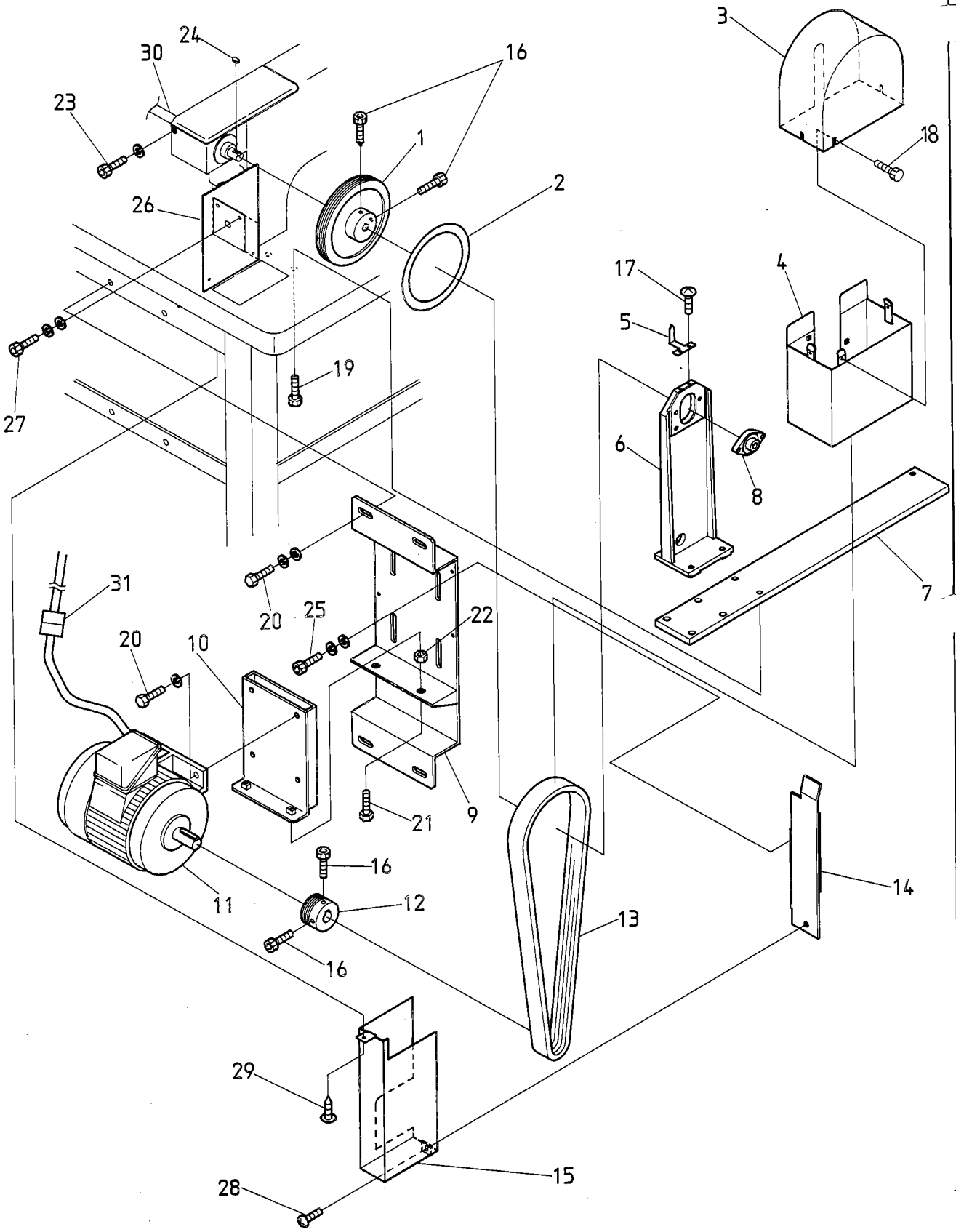
3
24
30
16
23
1
18
2
26
17
4
5
19
27
6
8
7
31
20
25
22
20
10
9
21
16
14
11
12
13
16
29
15
28

⑮ Drive mechanism

LIST	LIST No.	DESCRIPTION	Q'TY	REMARK
1	KR310000	Driving pulley	1	
2	HP313690	Angle label (B)	1	
3	KR310040	Belt cover (Upper)	1	
4	KV310050	Belt cover (Lower)	1	
5	KV310090	Angle gauge	1	
6	KV310020	Shaft holder bracket	1	
7	KV310030	Shaft holder bracket base	1	
8	HP321140	Top shaft connecting unit	1	
9	KV310070	Motor base (BENS)	1	
10	KV310080	Motor fixin base (BENS)	1	
11	HB310280	Motor FBK8-4P-0.75KW VF3 (With cable)	1	
12	KN310010	Motor pulley	1	
13	A9020200	Ribstar belt (4PK−1240)	1	
14	KV310110	Belt cover bracket (BENS)	1	
15	KV310100	Belt cover (BENS)	1	
16		Hex. socket bolt M6×12		
17		Pan screw M4×8		
18	A9012320	Screw	1	
19		Hex. socket bolt M8×20		
20		Hex. bolt M8×15		
21		Hex. bolt M8×55		
22		Hex. nut		
23		Hex. socket bolt M6×60		
24	KV310010	Key both round (5×5×35)	1	
25		Hex. socket bolt M6×12		
26	KR310040	Belt cover bracket	1	
27		Hex. socket bolt M4×6		
28		Pan screw M4×6		
29		Pias biss		
30	KV310120	Top shaft connecting shaft (L=3300)	1	Choice and use
	KV310130	Top shaft connecting shaft (L=5700)	1	Choice and use
31	A9053070	NS-Motor cable (7.5W)	1	

(IE)1.100

⑯ Connecting shaft mechanism

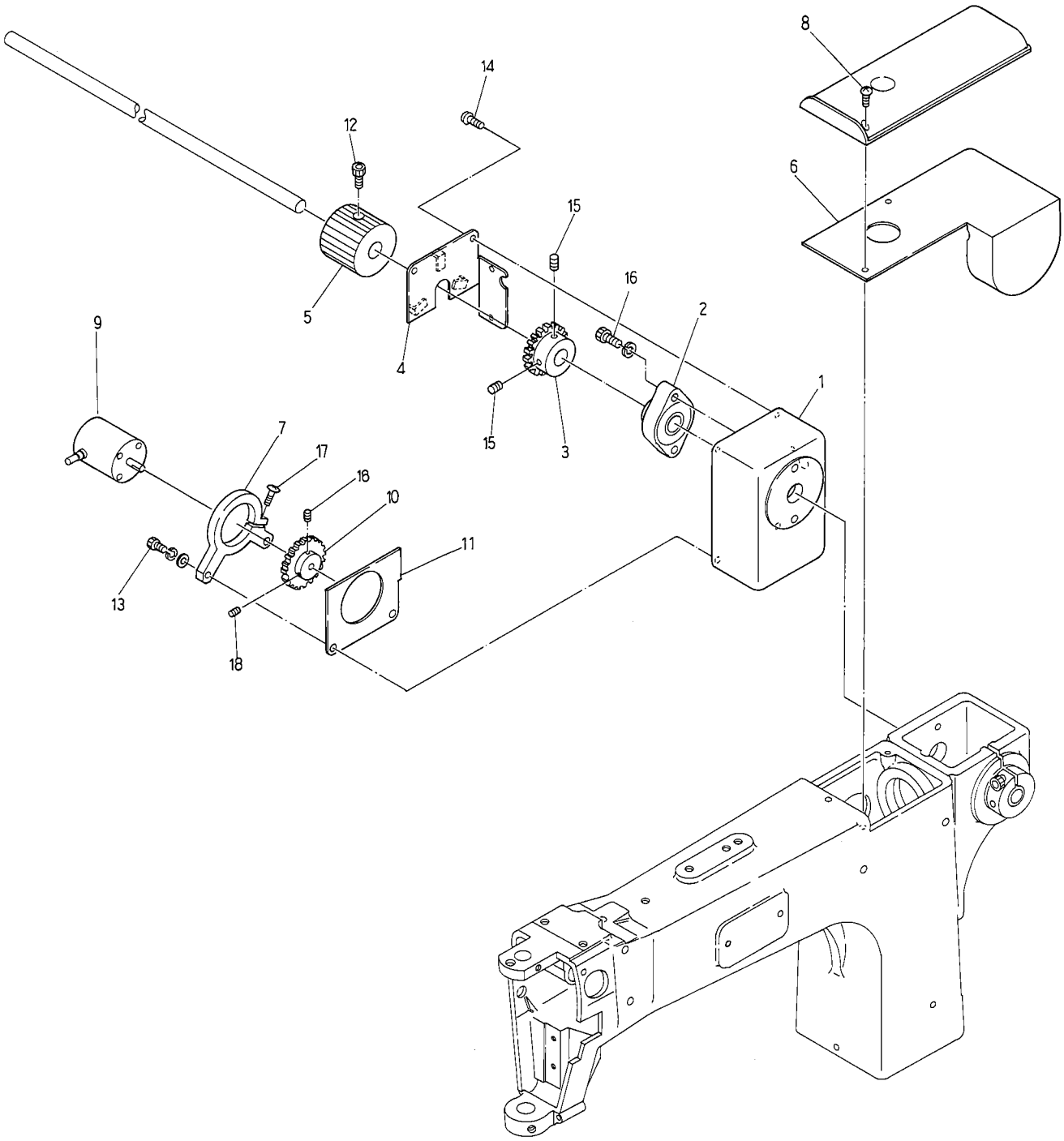

⑯ Connecting shaft mechanism

ITEM	LIST No.	DESCRIPTION	Q'TY	REMARK
1	KR310090	Encorder box	1	
2	KP321140	Top shaft connecting bearing unit (SBFLN02)	1	
3	KR310130	Encorder driving gear No.1	1	
4	KR310120	Encorder box cover A	1	
5	KC320590	Hand pulley	1	
6	KR330110	Shaft sand cover	1	
7	KC312890	Encorder cage	1	
8		Truss screw M4×10		
9	KN511020	Position corder 051	1	
10	KR310100	Encorder driving gear No.2	1	
11	KR310110	Encorder box cover B	1	
12		Hex. socket bolt M6×12		
13		Hex. socket bolt M6×20		
14		Truss screw M4×6		
15		Hex. socket set screw M5×10		
16		Hex. socket bolt M6×40		
17		Truss screw M4×15		
18		Hex. socket set screw M4×10		

⑰ Pantograph drive mechanism I (V・H-Direction)

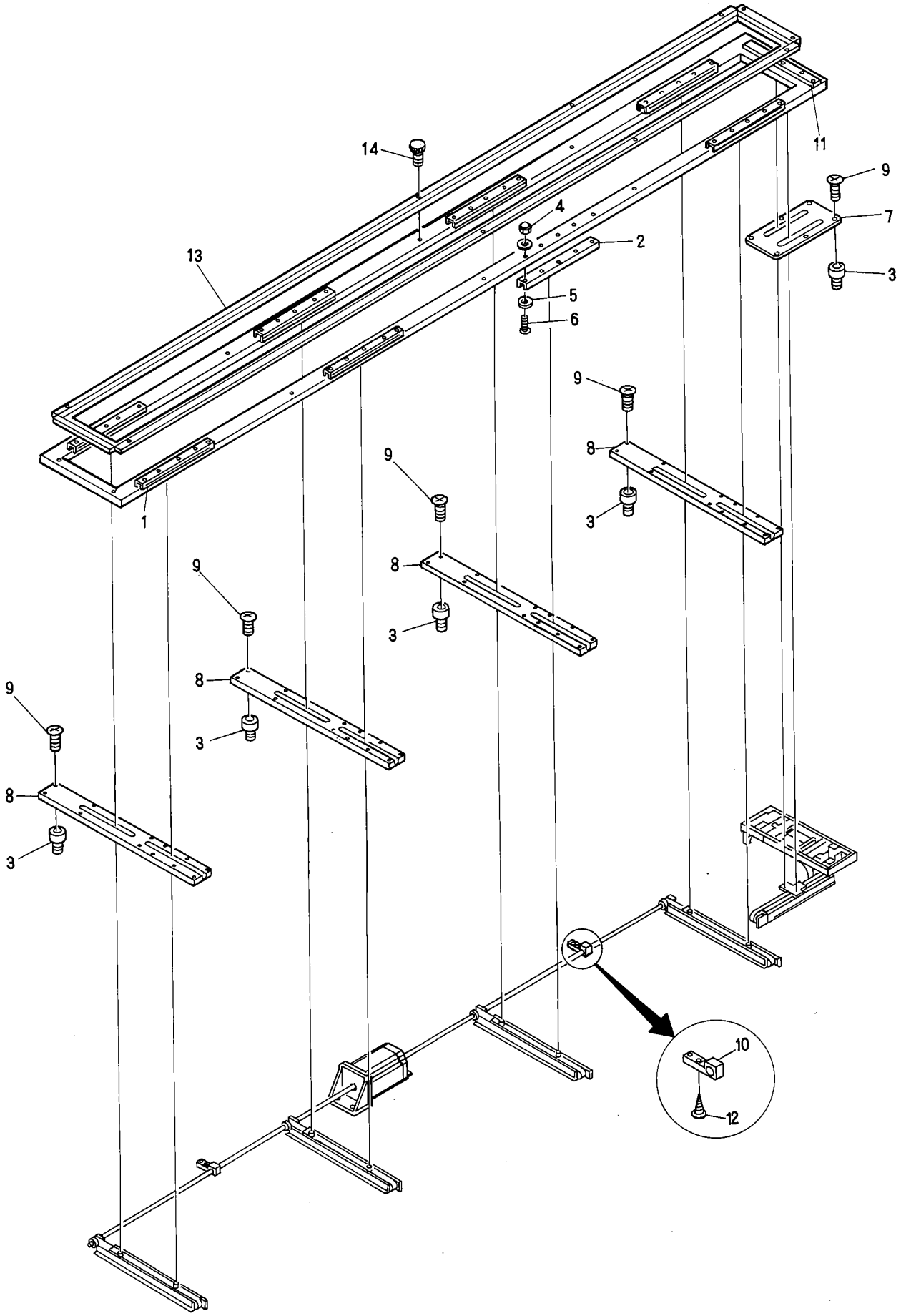

⑰ Pantograph drive mechanism I (V・H-Direction)

ITEM	LIST No.	DESCRIPTION	Q'TY	REMARK
1	KC450020	Pantograph frame a'ssy (HJ－12 320×300)	1	
2	KN480400	Guide rail B (470L)	6	
3		Rag nut (C) M4		
4		Cap nut M4		
5		Washer with gear 4		
6		Flush screw M4×12		
7	KV480040	V-Guide cover (Stroke 350)	1	
8	KV480020	H-Center guide cover	4	
9		Flush screw M4×8 (Under cut)		
10	HV480070	Pulse motor connecting shaft support	2	
11	KC480350	Guide rail (470L)	1	
12		Pias biss 5×23		
13	1LKC450020	Pantograph (SR12 320×300)	1	
14	KF730790	Knurling screw	36	

⑱ Pantograph drive mechanism Ⅱ (H-Direction)

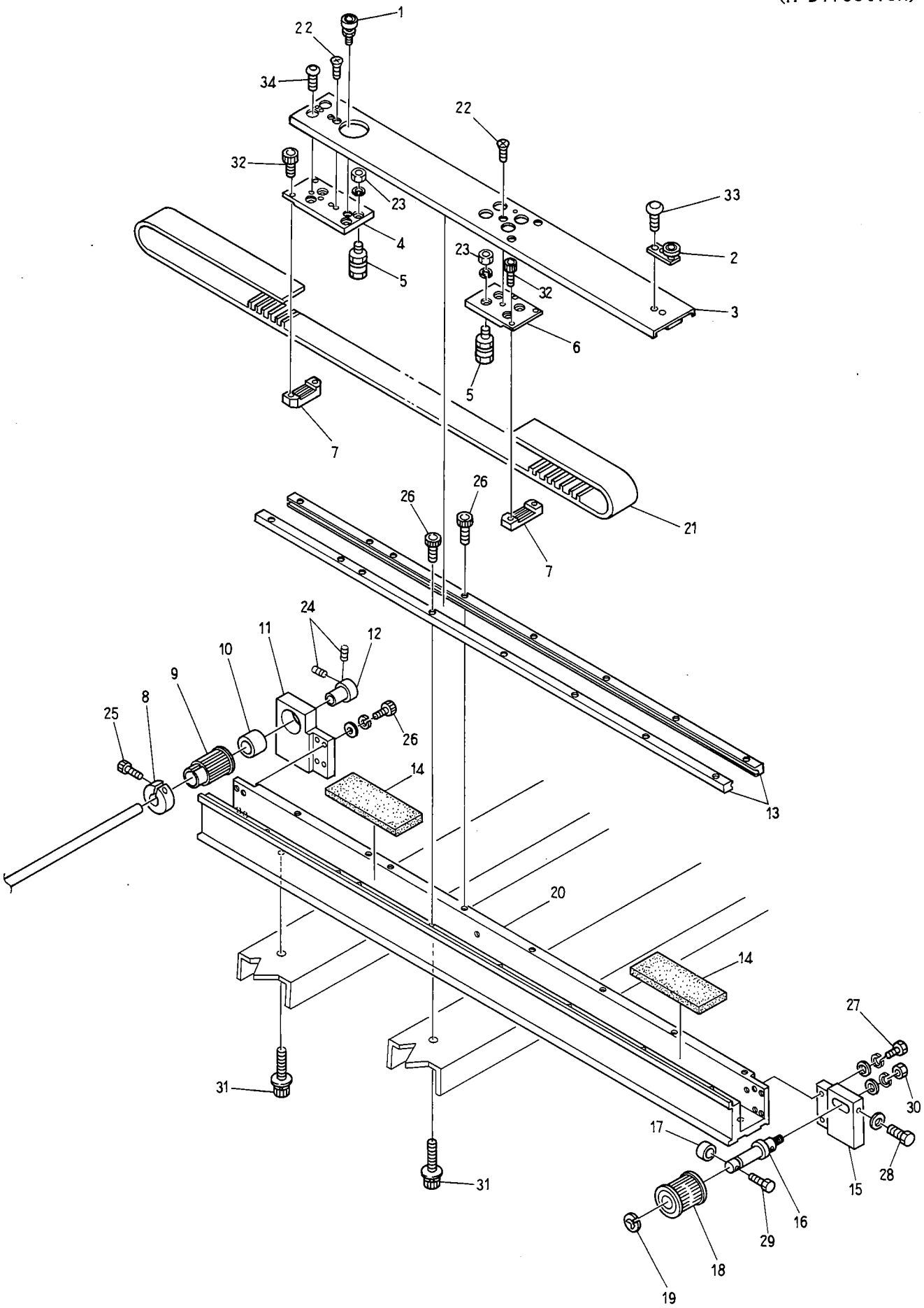

⑱ Pantograph drive mechanism Ⅱ (H-Direction)

(R=H-Rail Q'TY)

ITEM	LIST No.	DESCRIPTION	Q'TY	REMARK
1	HP483370	Guide rail bearing pin a'ssy	R×1	
2	HP483391	Guide rail bearing pin a'ssy (H)	R×1	
3	KN483442	H-Member connectig channel		
	KN483460	H-Member connectig channel	1	For pantograph stop
4	KN482871	H-Roller base (Rear)	R×1	
5	HP482950	Roller pin a'ssy A	R×8	
6	KN482880	H-Roller base (Front)	R×1	
7	HP482940	Timing belt set rack (5M)	R×2	
8	HH481980	Clamping φ19	R×1	
9	HV480040	Pantograph driving pulley (Rear)	R×1	
10	A90110063	Needle bearing (TLA2016)	R×1	
11	KR480060	H・V-Guide rear pulley bracket	R×1	
12	HH481970	Pulse motor connecting shaft collar	R×1	
13	KN483450	V-Guide rail (L=660)	R×2	
14	KN480061	Raile base felt (100×38×6)	R×2	
15	KR480050	H・V-Guide rear pulley bracket	R×1	
16	HH481991	Timing pulley shaft	R×1	
17	HH482110	Pulley shaft bolt cap	R×1	
18	HV480050	Pantograph driving pulley (Front)	R×1	
19	A90120052	E-Ring (φ10)	R×1	
20	KV480010	H-Guide rail base (BENS)	R×1	
21	HV4801101410	Timing belt	R×1	
22		Flush screw M4×8 (Under cut)		
23		Hex. nut M5		
24		Hex. socket set screw M5×8		
25		Hex. socket bolt M5×18		
26		Hex. socket bolt M4×15		
27		Hex. socket bolt M4×18		
28		Hex. bolt M4×25		
29		Hex. bolt M4×35		
30		Hex. nut M8		
31		Hex. socket bolt M8×22 (With plain washer, spring washer)		
32		Hex. socket bolt M3×6		
33		Hex. socket button bolt M4×5		
34		Hex. socket button bolt M4×8		

⑲ Pantograph drive mechanismⅢ (H-Direction•Drive)

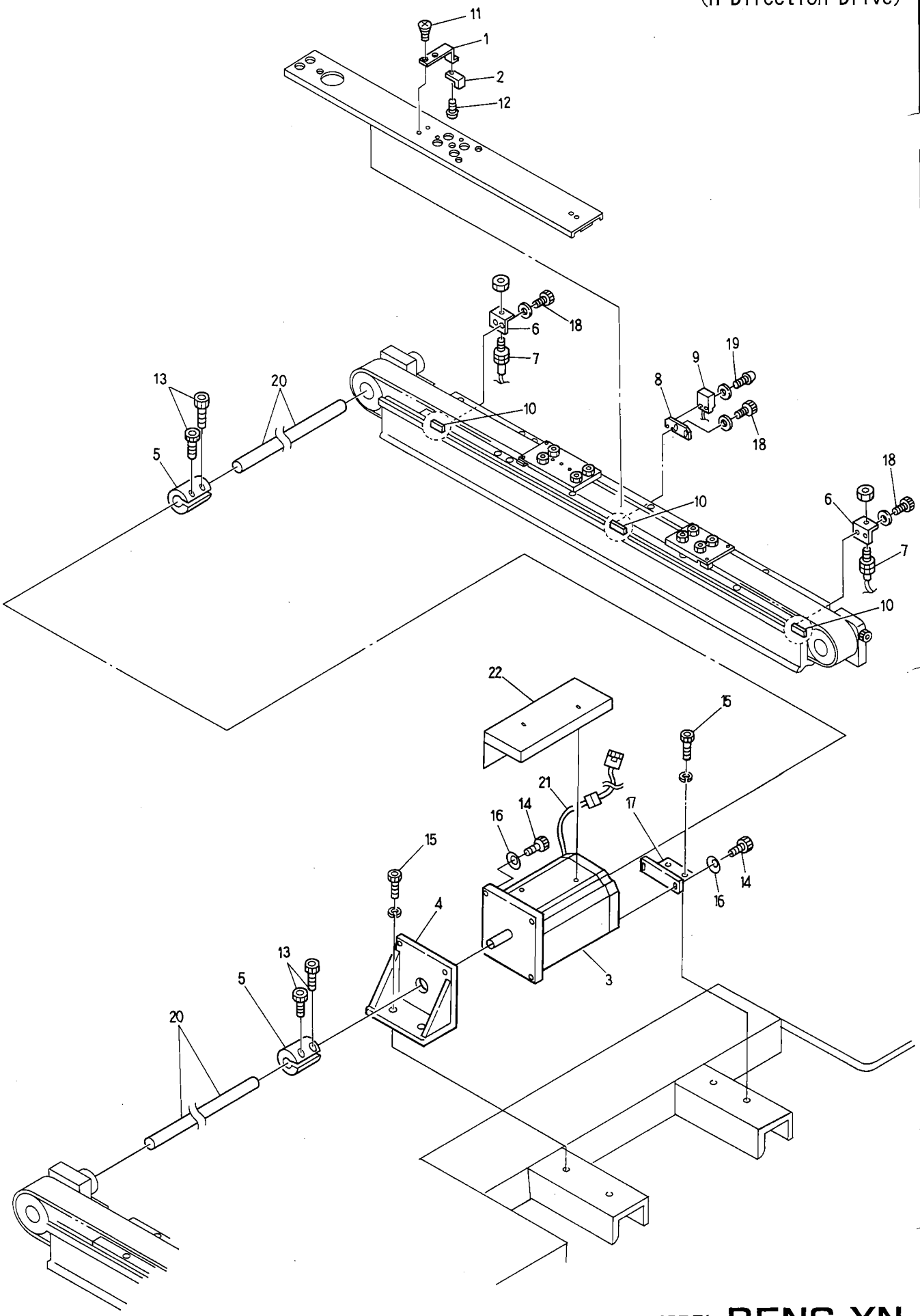

⑲ Pantograph drive mechanismⅢ (H-Direction・Drive)

ITEM	LIST No.	DESCRIPTION	Q'TY	REMARK
1	KU460342	H-Pantograph origin point magnet bracket	1	
2	A9052030	Magnet (M−102A−02)	1	
3	HV480060	Pulse motor (5M)	2	
4	HV480010	H-Pulse motor bracket	1	
5	HH481931	Pulse motor coupling	3	
6	MT460240	RS−001 Bracket (V)	2	
7	A9052024	Switch RS−001	2	
8	KN450300	MH−601A Proximity switch fixing bracket	1	
9	A9052031	Magnet proximity switch (MH−601A)	1	
10	KU460270	Plate nut M3	3	
11		Flush screw M4×8 (Under cut)		
12		Truss screw M3×6		
13		Hex. socket bolt M5×18		
14		Hex. socket bolt M6×22		
15		Hex. socket bolt M8×35		
16		Hex. socket bolt spring M6	4	
17	HV480020	H-Pulse motor auxiliary bracket	1	
18		Hex. socket bolt M3×8		
19		Truss screw M3×10		
20		H-Pulse motor connecting shaft φ15	1	
21	HV510020	H-Pulse motor of cable of extension (L=1500)	1	
22	KV310060	H-Pulse motor cover (BENS)	1	

⑳ Pantograph drive mechanismⅣ (V-Direction•Drive)

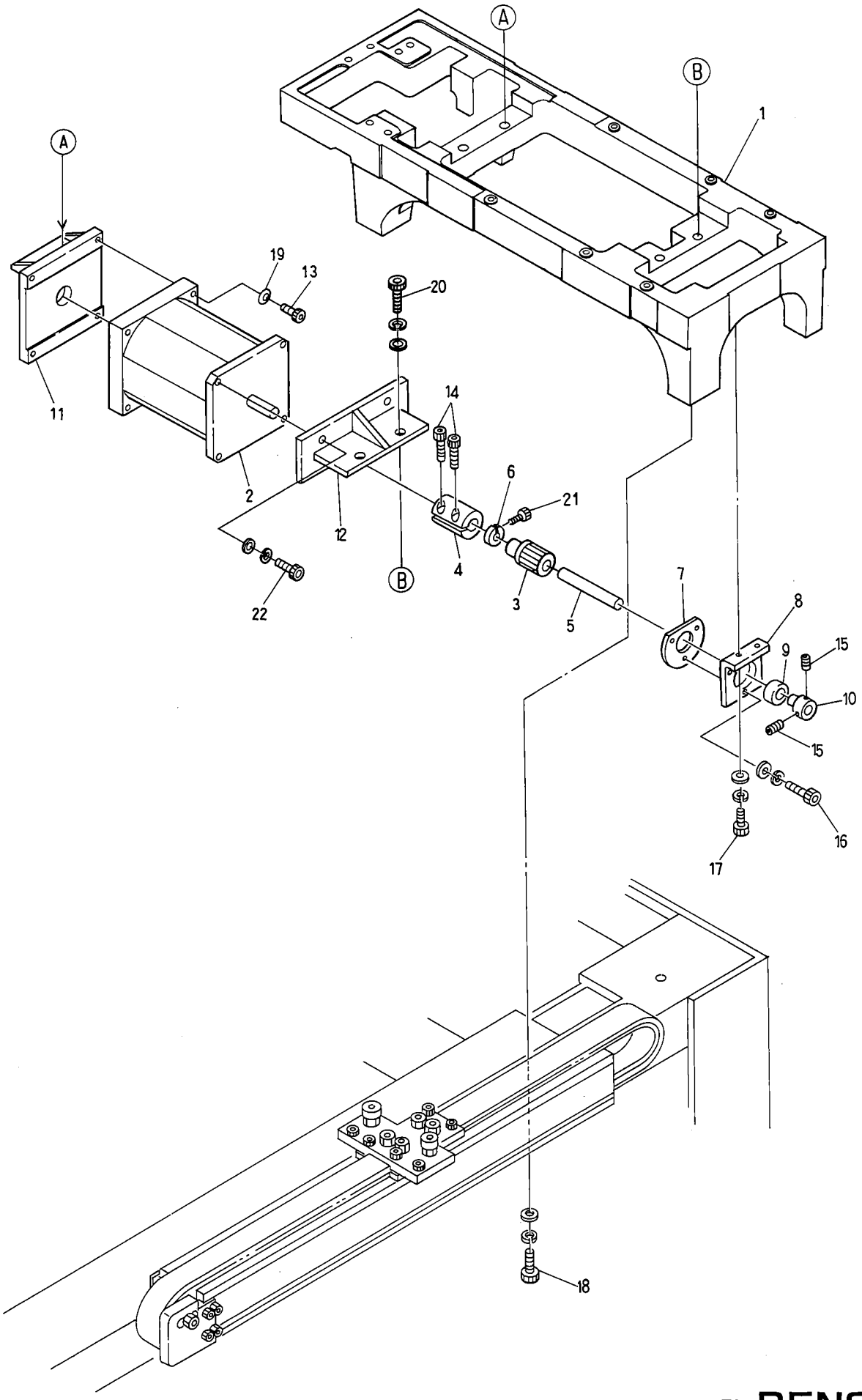

⑳ Pantograph drive mechanismⅣ (V-Direction・Drive)

ITEM	LIST No.	DESCRIPTION	Q'TY	REMARK
1	KV330030	Control unit base	1	
2	HV480060	Pulse motor (5M)	2	
3	HV480040	Pantograph driving pulley (Rear)	1	
4	HH481931	Pulse motor coupling	1	
5	KV470030	V-Pulse motor connecting shaft	1	
6	HH481980	Clamping φ19	1	
7	KN490130	V-Timing belt shaft bearing husing	1	
8	KN490121	Bearing bracket	1	
9	A9011110	Needle bearing (HK2016)	1	
10	HH481970	Pulse motor connecting shaft collar	1	
11	KV470010	Pulse motor bracket A	1	
12	KV470020	Pulse motor bracket B	1	
13		Hex. socket bolt M8×22		
14		Hex. socket bolt M5×28		
15		Hex. socket set screw M5×8		
16		Hex. socket bolt M4×10		
17		Hex. socket bolt M5×12		
18		Hex. socket bolt M8×25		
19		Disc spring 6 for hex. socket bolt		
20		Hex. socket bolt M8×25		
21		Hex. socket bolt M5×18		
22		Hex. socket bolt M6×18		

㉑ Pantograph drive mechanism V
(V-Direction•Guide rail base relation)

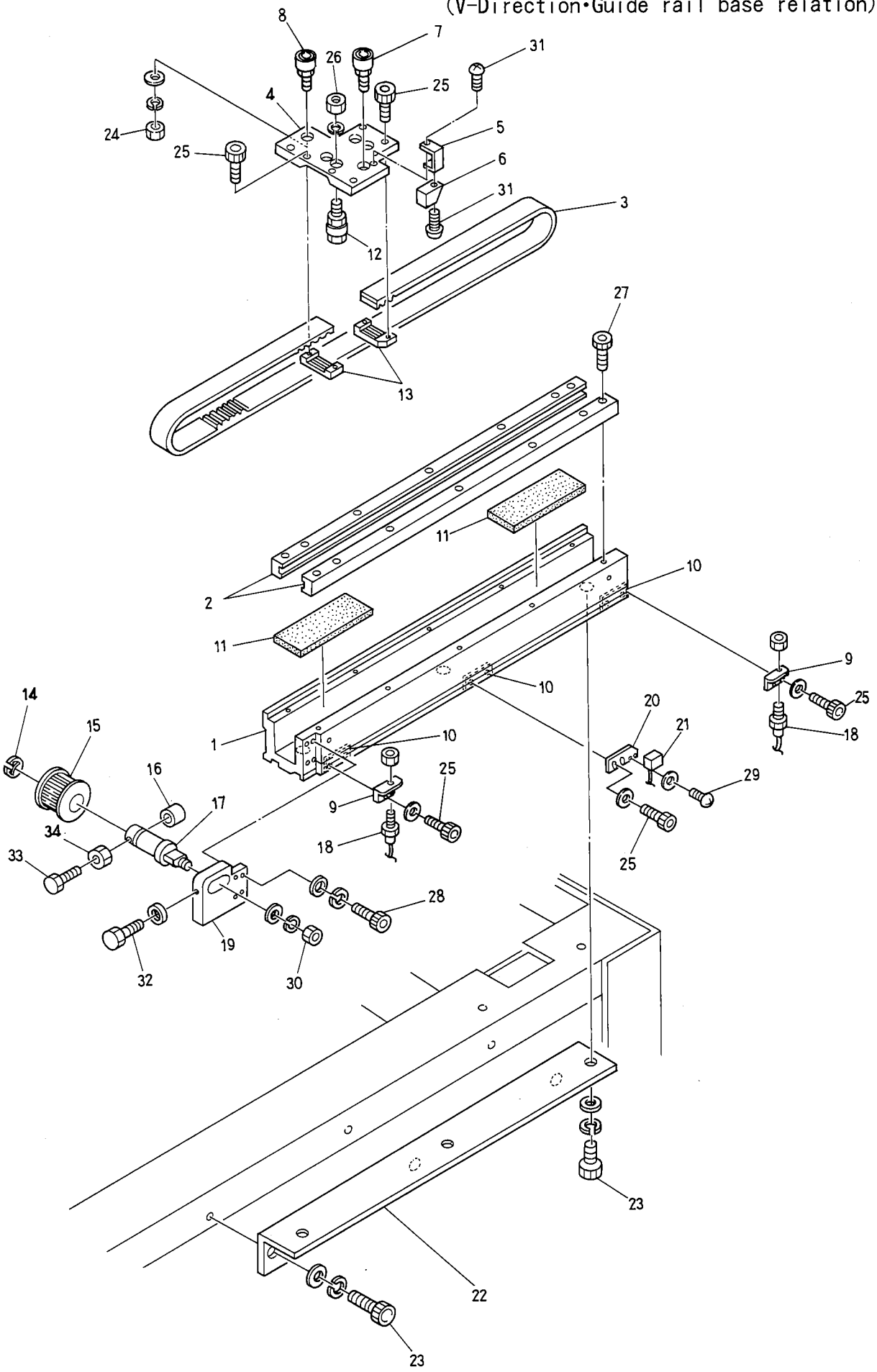

㉑ Pantograph drive mechanism V (V-Direction・Guide rail base relation)

ITEM	LIST No.	DESCRIPTION	Q'TY	REMARK
1	KV480030	V−Guide rail base (Stroke 350)	1	Choice and use
	KV480170	V−Guide rail base (Stroke 480)	1	Choice and use
		V−Guide rail base (Stroke 600)	1	Choice and use
2	KN483450	V−Guide rail (L=660)	2	
3	A9020098	Timing belt (300S5M2000)	1	
4	KN482890	V-Roller base	1	
5	KN450311	V-Pantograph origin point magnet bracket	1	
6	A9052030	Magnet (M−102A−02)	1	
7	HP483370	Guide rail bearing pin a'ssy	1	
8	HP483111	Guide rail bearing pin a'ssy B	1	
9	MT460240	RS−001 Bracket (V)	2	
10	KU460270	Plate nut (M3)	3	
11	KN480061	Rail base felt (SR100×38×6)	2	
12	HP482950	Roller pina'ssy A	4	
13	HP482940	Timing belt rack (5M)	2	
14	A9012052	E-Ring (φ10)	1	
15	HV480040	Pantograph drive pulley (Rear) (S5M)	1	
16	HH482110	Pulley shaft bolt cap	1	
17	HH481991	Timing pulley shaft	1	
18	A9052024	Switch RS−001	2	
19	KR480060	H-Guide pulley bracket	1	
20	KN450300	Promixity fixing bracket MH−601A	1	
21	A9052031	Magnetic memory promixing swith MH−601A	1	
22	KC470460	V-Guide rail base bracket (Stroke 350、480)	1	Choice and use
	KN482620	V-Guide rail base bracket (Stroke 600)	1	Choice and use
23		Hex. socket bolt M8×20		
24		Hex. nut M6		
25		Hex. socket bolt M3×6		
26		Hex. nut M5		
27		Hex. socket bolt M4×15		
28		Hex. socket bolt M4×18		
29		Truss screw M3×6		
30		Hex. nut M8		
31		Truss screw M3×6		
32		Hex. bolt M4×25		
33		Hex. bolt M4×35		
34		Hex. nut M4		

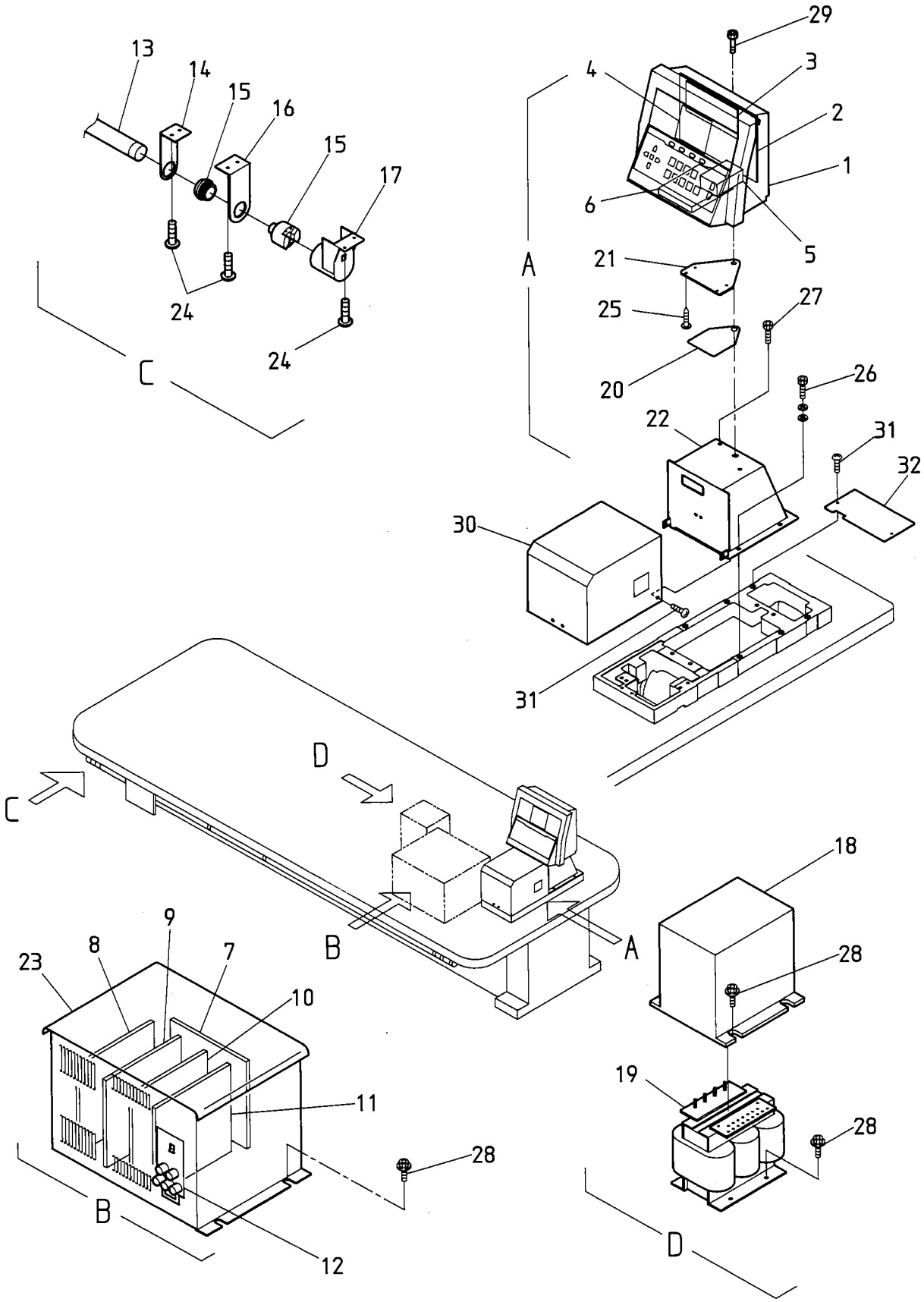
29
13
14
15
16
15
17
4
3
2
1
6
5
A
21
25
27
24
24
20
26
C
22
31
32
30
31
D
C
18
9
8
7
23
10
B
A
28
11
19
28
28
B
12
D

㉒ Contorol system

ITEM	LIST No.	DESCRIPTION	Q'TY	REMARK
1		Automat controller BENS	1	
2	EBY01250	CPU-Board	1	
3	EBY01240	Memory board	1	
4	EBY01260	LCD-Display unit	1	
5	EBY01270	Automat power	1	
6	EBY01350	Floppy disk drive	1	
7	EBY01330	Back board	1	
8	EBY10310	Pulse motor drive unit	1	
9	EBY01340	Inverter unit	1	
10	EBY01300	CPU-Board	1	
11	EBY01320	Power board	1	
12	EBY01290	Power control unit	1	
13	KF530160	Switch bar	1	
14	KC530240	Bar switch bracket (Small)	5	
15	KF530120	Push botton switch MS319 (Green)	1	
	KF530111	Push botton switch MS319 (Red)	1	
16	KC530230	Bar switch bracket (Large)	4	
17	KF530150	Push botton switch cap	1	
18	KC520020	Transformer cover set	1	
19		Automat transformer 3P (MSH)	1	
		Automat transformer 1P (MSH)	1	
20	HV330010	Automat bracket	1	
1	HV330020	Automat bracket specer	1	
22	KV330010	Automat base	1	
23		Automat driver	1	
24		Tapping screw M4×20		
25		Truss tapping screw 3.5×8		
26		Hex. socket bolt M8×20		
27		Hex. socket flang bolt M6×20		
28		Hex. socket flang bolt M6×12		
29		Hex. socket bolt		
30	KV330020	Turning cover a'ssy		
31		Truss screw M4×6		
32	KV330040	Unit base cover	1	
	HV330010	Automat bracket		

(IE)1.100

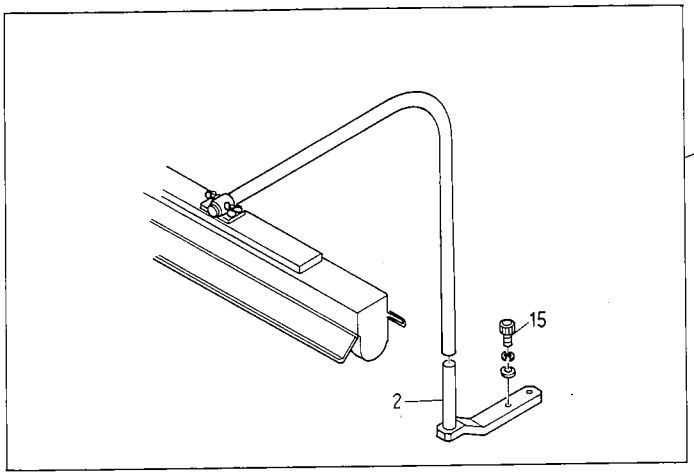
1
2
15

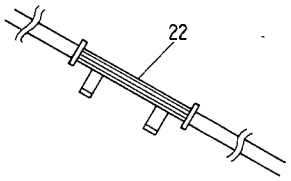
22

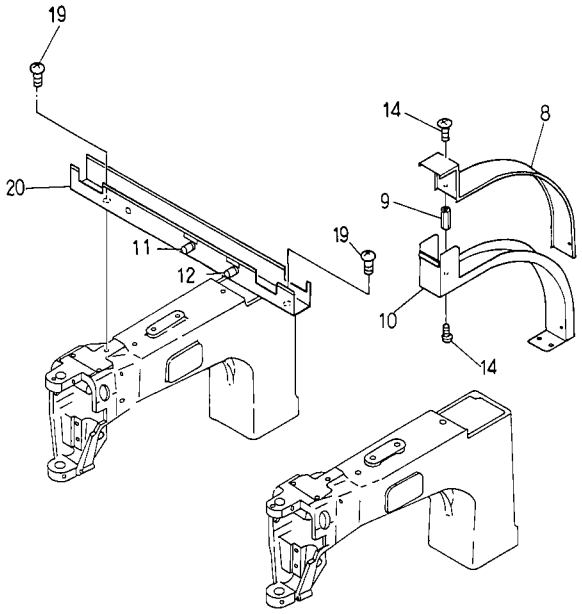
19
20
11
12
19
14
8
9
10
14

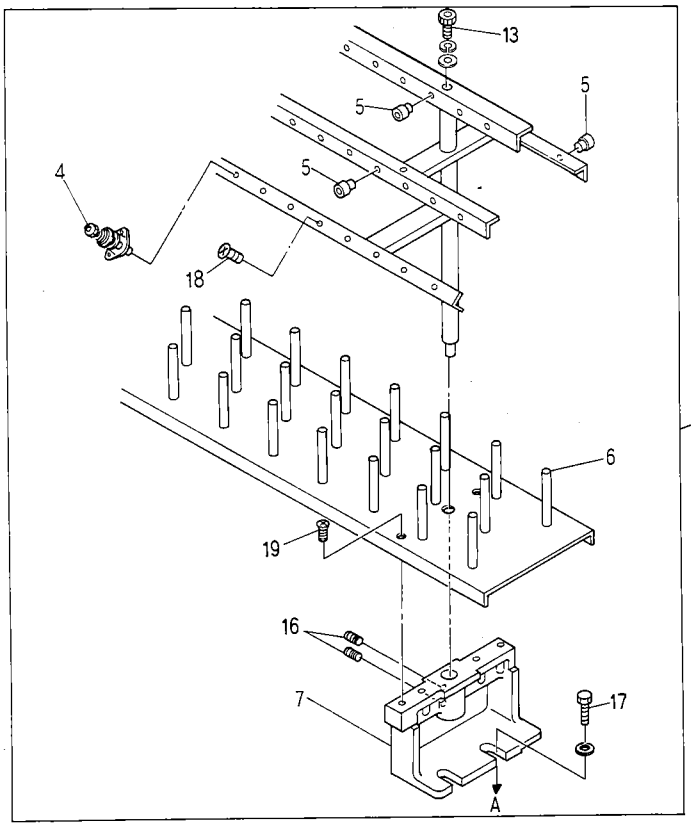
13
5
5
5
4
18
3
6
19
16
7
17
A

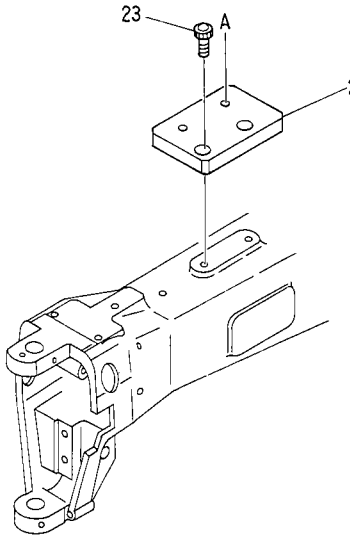
23
A
21

㉓ Option

ITEM	LIST No.	DESCRIPTION	Q'TY	REMARK
1	KF710300	Fiuorescent lamp set LRP 4012K 15/16LG (904,906 100V)	1	
	KF710100	Fiuorescent lamp set LRP 4012K 25LG (904,906 200V)	1	
	HH710300	Fiuorescent lamp set LRP 4013K 15/16LG (908 100V)	1	
	HH710100	Fiuorescent lamp set LRP 4013K 25LG (908 200V)	1	
2	KG710161	Fiuorescent lamp stand base		
3	1HP02520	Spool holder (BEATME-902-YF)	1	
4	HP241430	Second tention unit complete (D=13.5)		
5	KF240900	Thread guide ceramic (For spool stand)		
6	HT710000	Spool stand pin	H×9	
7	HP710791	Spool stand base		
8	KR510130	Cable duct No.4 cover	1	
9	MT510791	Nut for cable duct	2	
10	KR510120	Cable duct No.4	1	
11	A9052036	Push button switch SB-221N/O OFF Red		906…4 908…5
12	A9052032	Push button switch SB-221N/O ON Green		906…4 908…5
13		Hex. socket bolt M8×45		
14		Pan screw M4×6		
15		Hex. socket bolt M6×15		
16		Hex. socket set screw M5×8		
17		Hex. bolt M8×20		
18		Flush screw M5×6		
19		Flush screw M4×12		
20	1UKV15320	Duct cable (BENS)	1	
21	KR330160	Spool stand base spacer		
22	2DKV15320	Spool stand base fixing base NS-15P320	1	
23		Hex. socket bolt		

(IE)1.100

㉔ Thread guide mechanism (Lower thread sensorium)

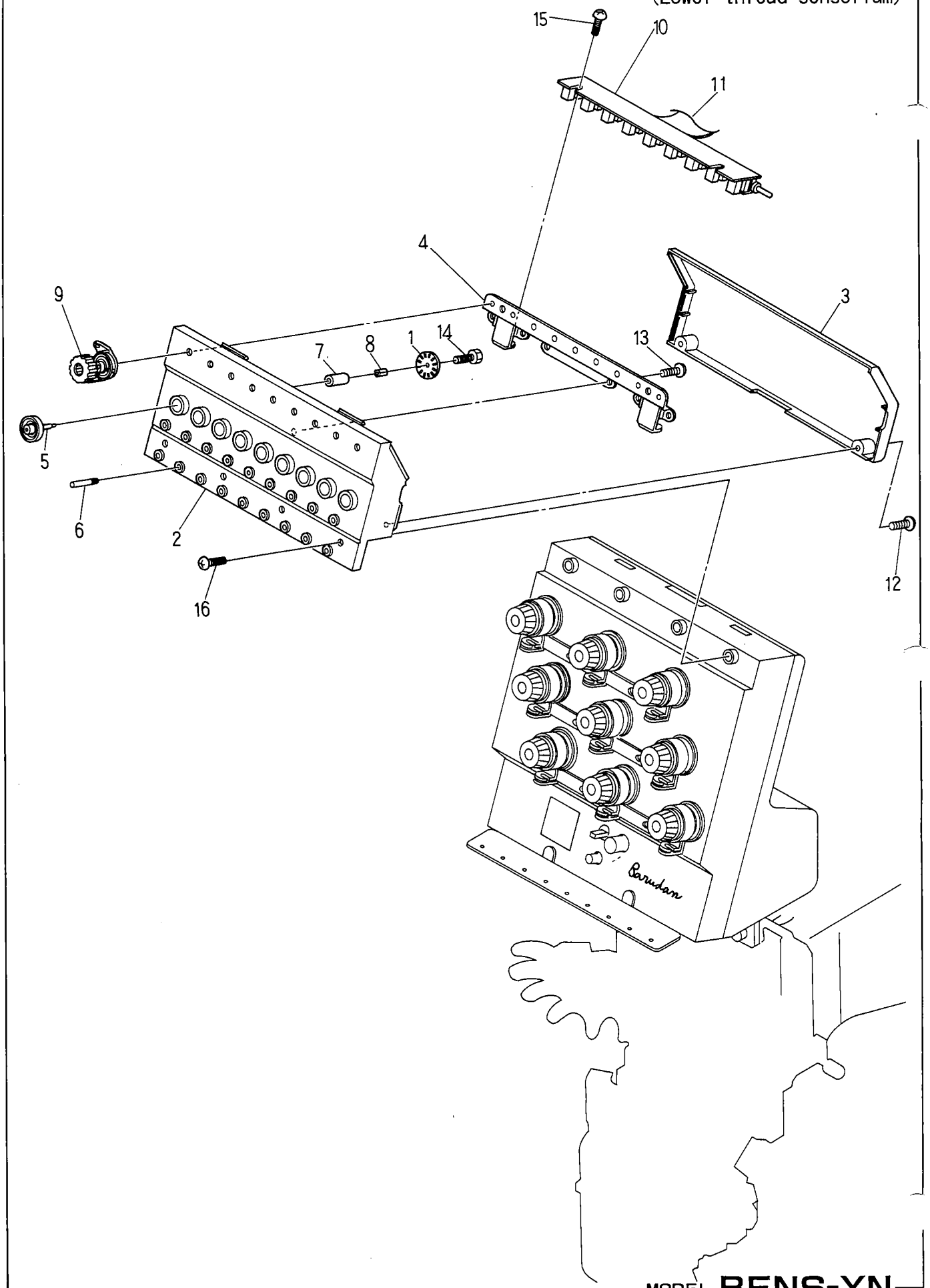

㉔ Thread guide mechanism (Lower thread sensorium)

(H=Head Q'TY)

ITEM	LIST No.	DESCRIPTION	Q'TY	REMARK
1	HT240100	Lower thread sensorium sensor disc (YN)	H×9	
2	HT240250	Lower thread sensorium box case (YN)	H×1	
3	HT240270	Lower thread sensorium box case (YN)	H×1	
4	HT240280	Lower thread sensorium box base (YN)	H×1	
5	HT240290	Tension wheel	H×9	
6	HT240300	Thread guide pin	H×18	
7	HT240310	Tension wheel bearing	H×9	
8	KN540510	Tension wheel nut	H×9	
9	HT240340	Second tension unit complete	H×9	
10		4690 Lower thread sensorium sensor board	H×1	
11		Sensor cable		
12		Pan screw M3×6		
13		Tapping pan screw 3×8		
14		Hex. socket bolt M2×3		
15		Tapping pan screw 3×12		
16		Hex. socket truss screw M4×10		

(IE)1.100

I N D E X

LIST No.	PAGE	ITEM No.	LIST No.	PAGE	ITEM No.
1HP02520	47	3	A9052032	47	12
1LKC450020	35	13	A9052036	47	47
1UKV15320	47	20	A9053070	31	31
2DKV15320	47	22	A9056010	9	27
A9010017	5	5	A9056013	23	13
A9011021	11	7	A9056018	21	1
A9011021	13	21	A9056020	17	6
A9011022	13	23	A9065028	25	27
A9011023	13	20	A9065035	27	27
A9011063	37	37	EBY01100	19	12
A9011110	41	9	EBY01120	27	6
A9011115	15	9	EBY01240	45	3
A9011152	11	6	EBY01250	45	2
A9012001	27	13	EBY01260	45	4
A9012002	25	13	EBY01270	45	5
A9012002	29	8	EBY01290	45	12
A9012007	5	31	EBY01300	45	45
A9012051	17	20	EBY01320	45	45
A9012052	37	19	EBY01330	45	7
A9012052	43	14	EBY01340	45	45
A9012053	13	31	EBY01350	45	6
A9012053	13	31	EBY10310	45	8
A9012056	23	8	HB220010	7	14
A9012137	29	7	HB230140	13	22
A9012143	29	5	HB230160	11	20
A9012164	11	29	HB230170	13	24
A9012190	15	4	HB230270	11	21
A9012208	27	20	HB230372	15	15
A9012291	13	17	HB230383	15	5
A9012320	31	18	HB230390	15	3
A9013045	21	18	HB230401	15	1
A9013066	9	15	HB230414	15	12
A9014051	17	19	HB230420	15	15
A9014055	13	19	HB230460	17	5
A9014063	5	18	HB230470	17	4
A9020098	43	3	HB230560	17	7
A9020200	31	13	HB230580	17	13
A9052005	25	14	HB230590	15	2
A9052024	39	7	HB230650	11	35
A9052024	43	18	HB230750	11	22
A9052028	21	21	HB240020	17	14
A9052030	39	2	HB240030	17	15
A9052030	43	6	HB240040	17	17
A9052031	39	9	HB240050	17	17
A9052031	43	21	HB240070	17	18

I N D E X

LIST No.	PAGE	ITEM No.	LIST No.	PAGE	ITEM No.
HB240080	17	22	HT230130	13	3
HB240090	17	21	HT230141	13	13
HB240110	17	17	HT230151	13	4
HB240310	17	8	HT230180	13	28
HB240330	17	12	HT230190	13	2
HB240340	17	11	HT230201	15	21
HB310280	30	11	HT230251	13	8
HH330760	25	23	HT230650	13	35
HH481931	39	5	HT240000	11	2
HH481931	41	4	HT240010	11	18
HH481970	37	12	HT240020	19	19
HH481970	41	41	HT240060	19	19
HH481980	37	8	HT240100	49	1
HH481980	41	6	HT240120	19	1
HH481991	37	16	HT240130	19	2
HH481991	43	17	HT240140	19	3
HH482110	37	17	HT240150	19	4
HH482110	43	16	HT240160	19	5
HH710100	47	1	HT240170	19	6
HH710300	47	1	HT240180	19	7
HP231390	5	13	HT240210	19	15
HP241430	47	4	HT240220	19	16
HP272550	9	1	HT240230	19	17
HP272560	9	2	HT240240	19	18
HP272570	9	26	HT240250	49	2
HP313690	31	2	HT240270	49	3
HP321140	5	25	HT240280	49	4
HP321140	31	8	HT240290	49	5
HP482940	37	7	HT240300	49	6
HP482940	43	13	HT240310	49	7
HP482950	37	5	HT240320	19	14
HP482950	43	12	HT240330	19	19
HP483111	43	8	HT240340	49	49
HP483370	37	1	HT270001	23	14
HP483370	43	7	HT270010	23	21
HP483391	37	2	HT270020	23	18
HP710791	47	7	HT270030	23	20
HT230000	13	18	HT270040	23	15
HT230041	13	7	HT270061	23	28
HT230051	13	5	HT270160	9	6
HT230062	13	16	HT270180	9	7
HT230080	11	15	HT710000	47	6
HT230090	11	11	HV330010	45	20
HT230100	11	12	HV330020	45	21
HT230110	13	15	HV480010	39	4

I N D E X

LIST No.	PAGE	ITEM No.	LIST No.	PAGE	ITEM No.
HV480020	39	17	KC270970	9	14
HV480040	37	37	KC270980	9	12
HV480040	41	3	KC271440	25	2
HV480040	43	15	KC312890	33	7
HV480050	37	18	KC320590	33	5
HV480060	39	3	KC330161	27	27
HV480060	41	2	KC330170	27	3
HV480070	35	35	KC330180	25	3
HV4801101410	37	21	KC330180	27	7
HV510020	39	21	KC330180	27	27
KB210160	5	1	KC330190	27	8
KB210170	17	1	KC330210	27	25
KB210180	7	1	KC330230	29	6
KB230011	5	30	KC330260	29	12
KB230021	5	30	KC330280	27	2
KB230030	5	27	KC330290	29	3
KB230040	5	27	KC330410	13	25
KB230050	5	28	KC330410	15	18
KB230060	15	8	KC330410	25	25
KB230070	15	7	KC330510	29	29
KB230080	15	6	KC330610	27	21
KB230090	11	5	KC330850	29	11
KB230100	11	8	KC330910	29	16
KB230110	11	11	KC450020	35	1
KB230161	11	1	KC470460	43	22
KB230170	17	3	KC480350	35	11
KB240010	11	14	KC520020	45	18
KB240021	11	3	KC530230	45	16
KB240030	17	2	KC530240	45	14
KB240040	17	16	KF220130	5	11
KB240051	19	13	KF220230	7	13
KB250020	19	21	KF220271	7	4
KB250030	19	22	KF220290	7	8
KB250040	19	23	KF220302	7	16
KB250050	19	25	KF220410	7	15
KB250060	19	26	KF220421	7	15
KC110910	3	4	KF220440	7	16
KC120830	3	8	KF220460	5	19
KC120841	3	3	KF220470	7	5
KC120860	3	2	KF220480	7	7
KC220210	7	17	KF220511	7	12
KC251330	5	29	KF220511	9	21
KC270101	23	22	KF220750	7	14
KC270271	23	17	KF230230	13	12
KC270292	23	16	KF230240	13	13

I N D E X

LIST No.	PAGE	ITEM No.	LIST No.	PAGE	ITEM No.
KN271732	25	15	KR480060	43	19
KN271750	25	11	KR510120	47	47
KN271781	25	25	KR510130	47	8
KN271800	25	29	KT230000	11	19
KN271980	9	2	KT230010	11	17
KN271990	25	25	KT230020	11	4
KN272000	9	23	KT230030	11	11
KN272350	25	12	KT230040	11	16
KN272400	9	3	KT230050	11	36
KN272400	21	6	KT330000	27	12
KN272400	23	11	KU460270	39	39
KN310010	31	12	KU460270	43	43
KN330240	29	29	KU460342	39	1
KN330250	29	4	KV140010	3	3
KN450300	39	8	KV310010	31	24
KN450300	43	20	KV310020	31	6
KN450311	43	5	KV310030	31	7
KN480061	37	14	KV310050	31	4
KN480061	43	11	KV310060	39	22
KN480400	35	2	KV310070	31	31
KN482620	43	22	KV310080	31	31
KN482871	37	4	KV310090	31	5
KN482880	37	6	KV310100	31	15
KN482890	43	4	KV310110	31	14
KN483442	37	3	KV310120	31	30
KN483450	37	13	KV310130	5	5
KN483450	43	2	KV310130	31	30
KN483460	37	3	KV330010	29	15
KN490121	41	8	KV330010	45	22
KN490130	41	7	KV330020	29	13
KN511020	33	33	KV330020	45	30
KN540510	49	8	KV330030	41	1
KP321140	33	2	KV330040	45	32
KR310000	31	1	KV470010	41	11
KR310040	31	3	KV470020	41	12
KR310040	31	26	KV470030	41	5
KR310090	33	1	KV480010	37	20
KR310100	33	33	KV480020	35	8
KR310110	33	11	KV480030	43	1
KR310120	33	4	KV480040	35	7
KR310130	33	3	KV480170	43	1
KR330110	33	6	MT460240	39	6
KR330160	47	21	MT460240	43	43
KR480050	37	15	MT510791	47	47
KR480060	37	11			

I N D E X

LIST No.	PAGE	ITEM No.	LIST No.	PAGE	ITEM No.
KF230250	13	14	KL230280	15	13
KF230360	27	17	KL250040	5	7
KF230420	5	23	KL250051	7	3
KF230500	11	13	KL270000	23	1
KF230580	23	19	KL270010	23	6
KF230630	15	14	KL270020	23	5
KF230630	29	2	KL270030	23	7
KF230640	9	25	KL270040	23	2
KF230640	15	16	KL270050	23	3
KF230650	15	15	KL270060	23	4
KF230661	15	19	KL270070	23	23
KF230670	15	20	KL270081	21	2
KF230910	13	13	KL270091	21	4
KF230930	13	11	KL270101	21	8
KF240900	47	5	KL270110	21	3
KF250900	7	18	KL270120	21	21
KF330381	13	27	KL270130	21	16
KF330381	15	17	KL270260	21	21
KF530111	45	15	KL270400	21	13
KF530120	45	15	KL270410	21	17
KF530150	45	17	KL270420	21	15
KF530160	45	13	KL270430	21	12
KF710100	47	1	KL270440	21	14
KF710300	47	1	KL270450	21	5
KF730790	35	14	KL270520	23	23
KG230610	29	1	KL320000	5	24
KG330220	27	14	KL320020	5	22
KG710161	47	2	KL330020	29	17
KL210140	5	2	KL330040	27	18
KL220000	5	5	KL330050	27	16
KL220010	5	17	KN140950	3	7
KL220022	5	26	KN210210	7	1
KL220030	5	15	KN231350	29	14
KL220040	5	6	KN250131	7	2
KL220050	5	21	KN250131	9	8
KL220060	7	7	KN270952	9	13
KL220070	7	7	KN270961	9	11
KL220080	5	12	KN271521	9	1
KL220090	5	4	KN271560	9	17
KL220100	5	3	KN271620	9	26
KL220120	7	11	KN271630	9	28
KL220130	5	14	KN271644	9	4
KL220140	5	20	KN271700	25	20
KL220140	7	6	KN271712	25	8
KL220150	5	8	KN271720	25	24