Barudan

HIGH SPEED AUTOMATIC EMBROIDERY MACHINE

BEVY - Z12C/Z15C

PARTS LIST

BEVY - Z12C/Z15C
HIGH SPEED AUTOMATIC EMBROIDERY MACHINE

CONTENTS

	Machine layout (BEVY)
00A-1	Table· Frame A(2T/4T)
00A-2	Table· Frame A(6T/8T)
00B	Table· Frame B
01A	Head· Bed A
01B	Head· Bed B
02A	Thread cut A
02B	Thread cut B
02C	Thread cut C
03	Take up lever
04A-1	Needle bar A(Z12)
04A-2	Needle bar A(Z15)
04B	Needle bar B
04C	Needle bar C
04D	Needle bar D
04E	Needle bar ED
05	Jump
06-1	Thread guide(Z12)
06-2	Thread guide(Z15)
07	Color change
08-1	Drive(2T/4T)
08-2	Drive(6T/8T)
10A	Pantograph drive A
10B	Pantograph drive B
10C	Pantograph drive C
10D	Pantograph drive D
10E	Pantograph drive E
10F	Pantograph drive F
10G	Pantograph drive G
10H	Pantograph drive H
10I	Pantograph drive I
10J	Pantograph drive J
10K	Pantograph drive K
11A	Control A
11B-1	Control B(2T/4T)
11B-2	Control B(6T/8T)
12-1	Accessories(Z12)
12-2	Accessories(Z15)

Machine layout (BEVY-Z12C)

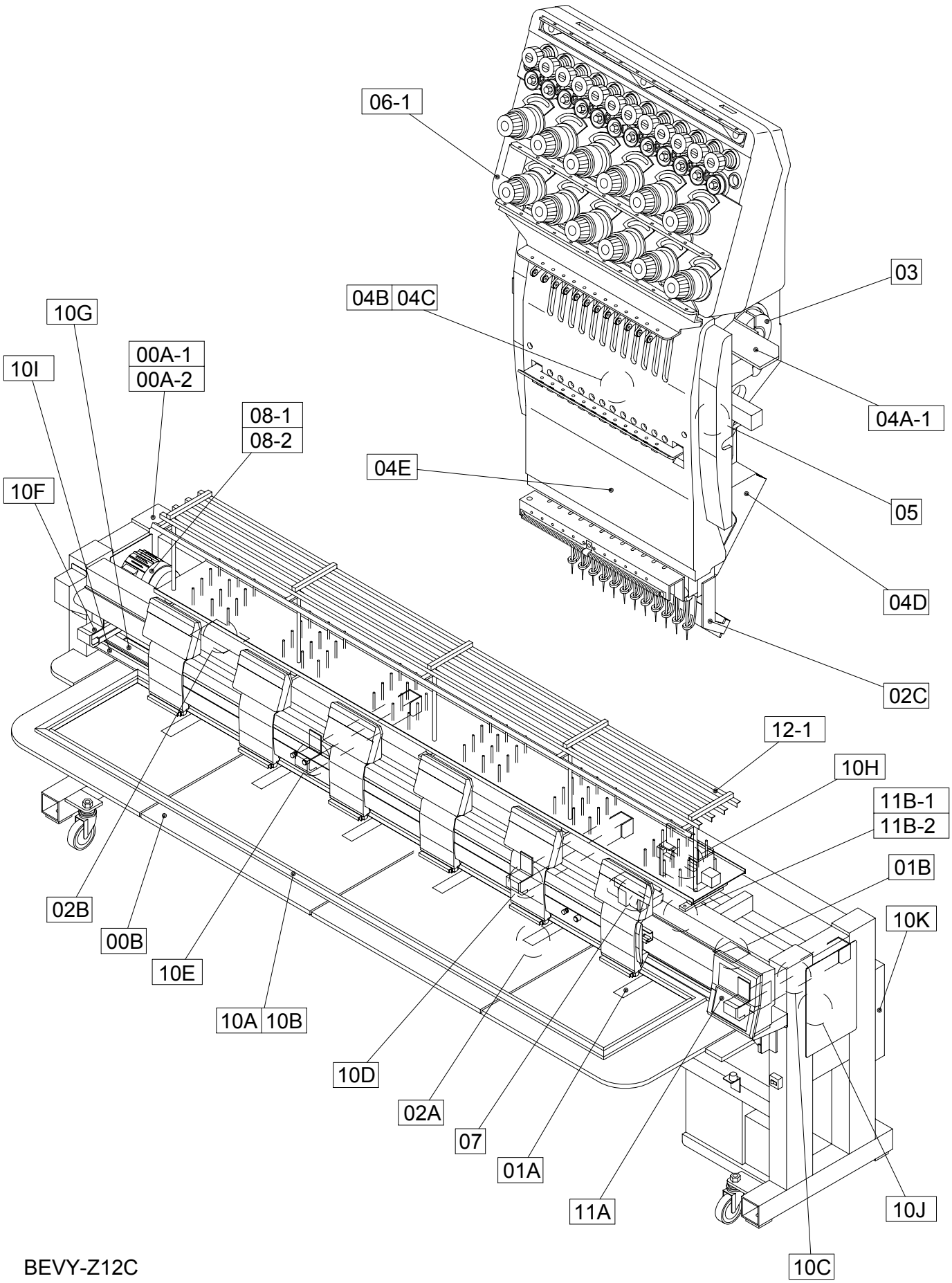

BEVY-Z12C

060411

Machine layout (BEVY-Z15C)

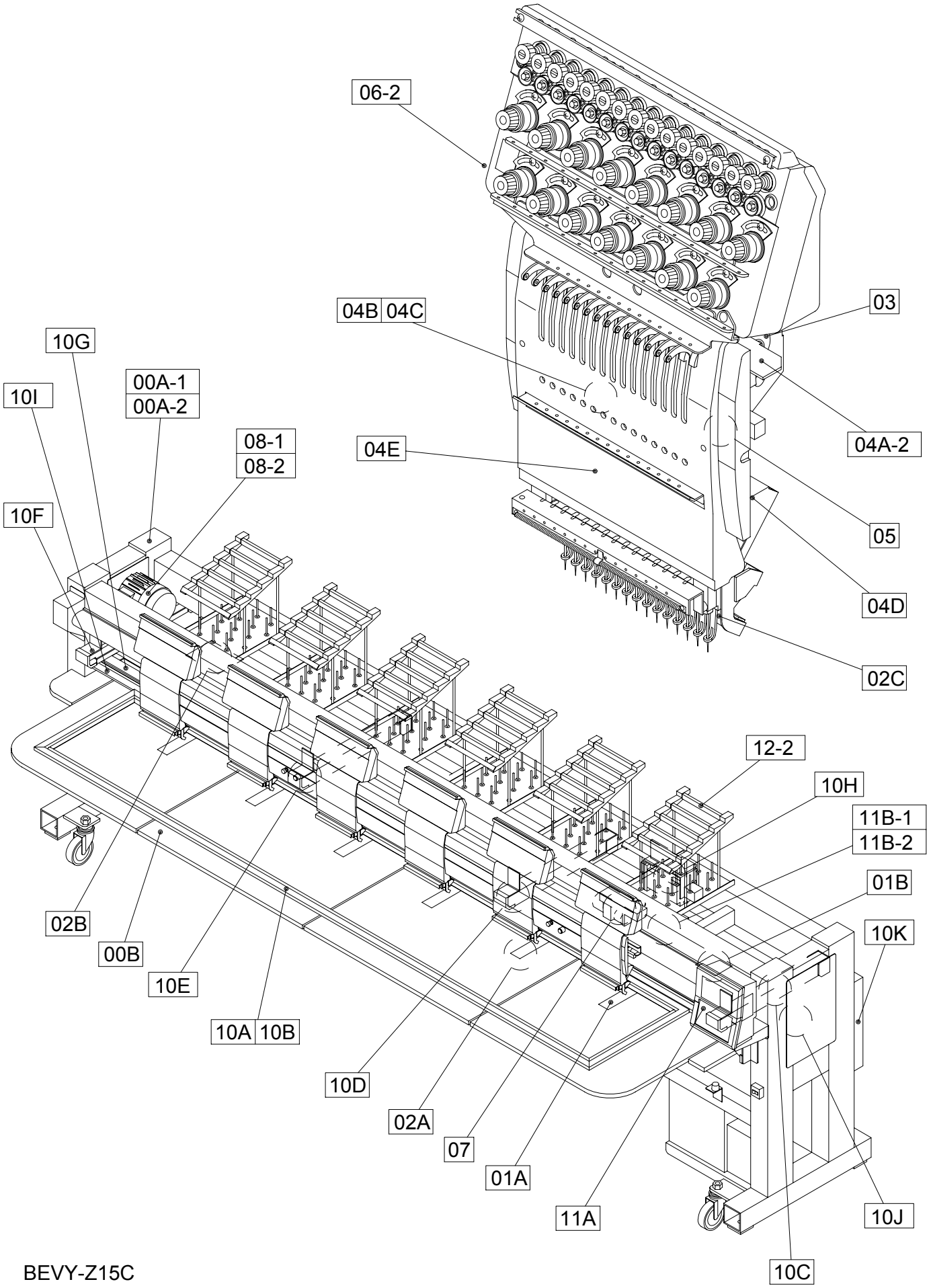

BEVY-Z15C

060411

00A-1 Table Frame A(2T/4T)

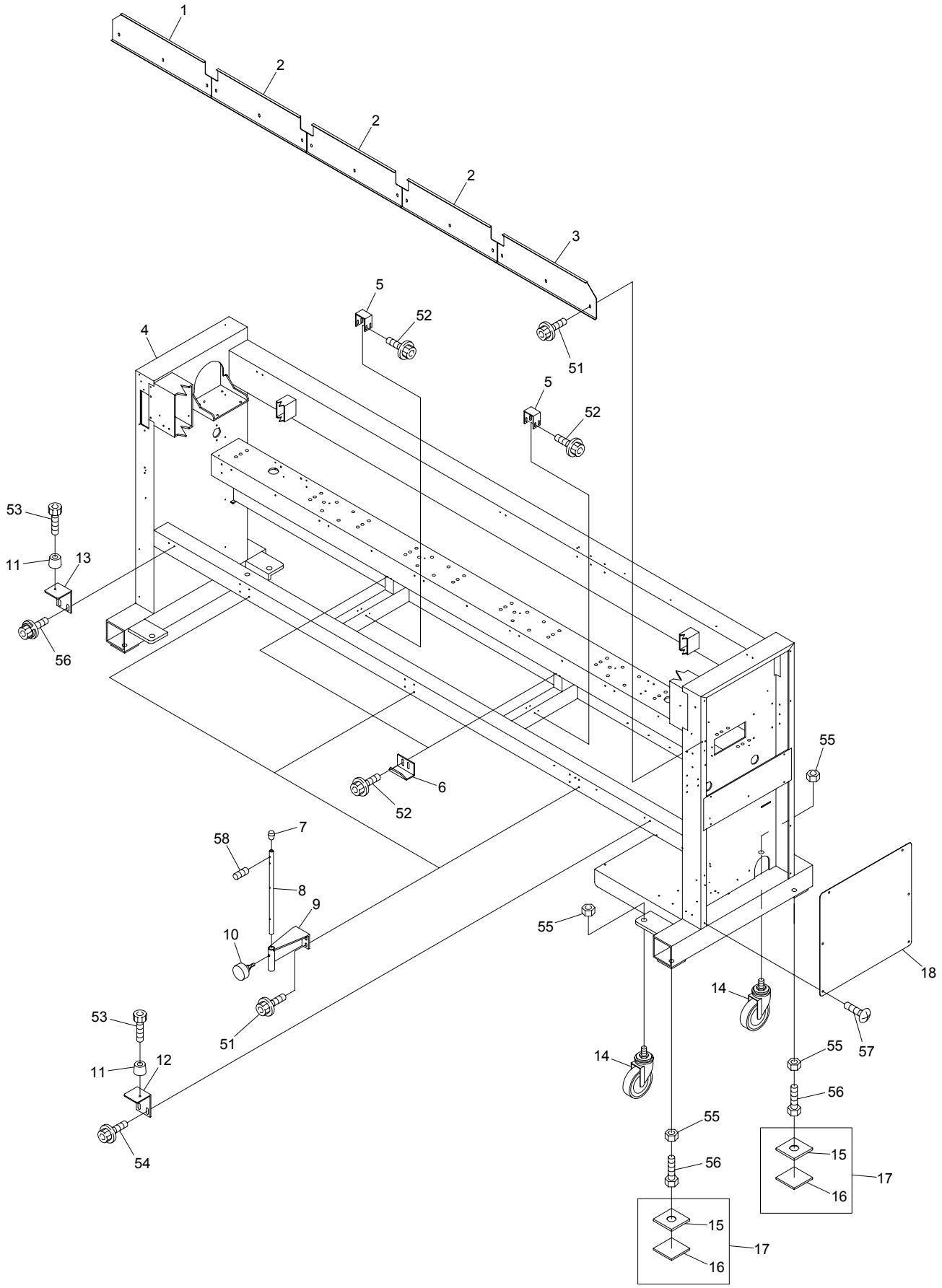

BEVY-Y9C BEVY-Z12C/Z15C

00A-1　Table・Frame A(2T/4T)

ITEM	LIST No.	DESCRIPTION	Q'TY	NOTE
1	SJ140050	Oil store(L) DYHE P=520	1	
2	SJ140060	Oil store(Center) DYHE P=520	1	2T
			3	4T
3	SJ140040	Oil store(R) DYHE P=520	1	
4	SJ160891	Frame BEDYHE-Z12-C02 450×520/520	1	2T
	SJ160461	Frame BEDYHE-ZQ6-C02 450×520/520	1	2T
	SJ160911	Frame BEDYHE-Z12-C04 450×520/520	1	4T
	SJ160532	Frame BEDYHE-ZQ6-C04 450×520/520	1	4T
5	SC140130	Table bracket	1	2T
			2	4T
6	SC140120	Table stopper	1	2T
			2	4T
7	A9014161	Rubber foot for pipes(C-31-5)	2	2T
			3	4T
8	SJ140120	Table stand(DYHE)	2	2T
			3	4T
9	SJ140130	Table stand bracket(DYHE-C)	2	2T
			3	4T
10	SJ140220	Table stand fixed knob bolt	2	2T
			3	4T
11	A9014163	Color rubber foot(C-30-FRB-3225)	2	
12	SC140160	Support table catch stay(R)	1	
13	SC140170	Support table catch stay(L)	1	
14	A9019049	Caster(SSC-125NU)	4	
15	SC160010	Mount base(Compact machine)	4	
16	SC160020	Vibroisolating pad(Compact machine)	4	
17	SC160030	Mount base a'ssy(Compact machine)	4	
18	SJ160040	Frame under cover(DYHE)	2	
51		Hex.socket flange bolt M6×12(Chromate)		
52		Hex.socket flange bolt M5×10(Chromate)		
53		Hex.socket bolt M5×15(With adhesive) Black(Screw lock red)		
54		Hex.socket flange bolt M5×12		
55		Hex.nut M20		
56		Hex.bolt M20×75		
57		Truss screw M5×10		
58		Hex.socket set screw M5×20		

00A-2 Table Frame A(6T/8T)

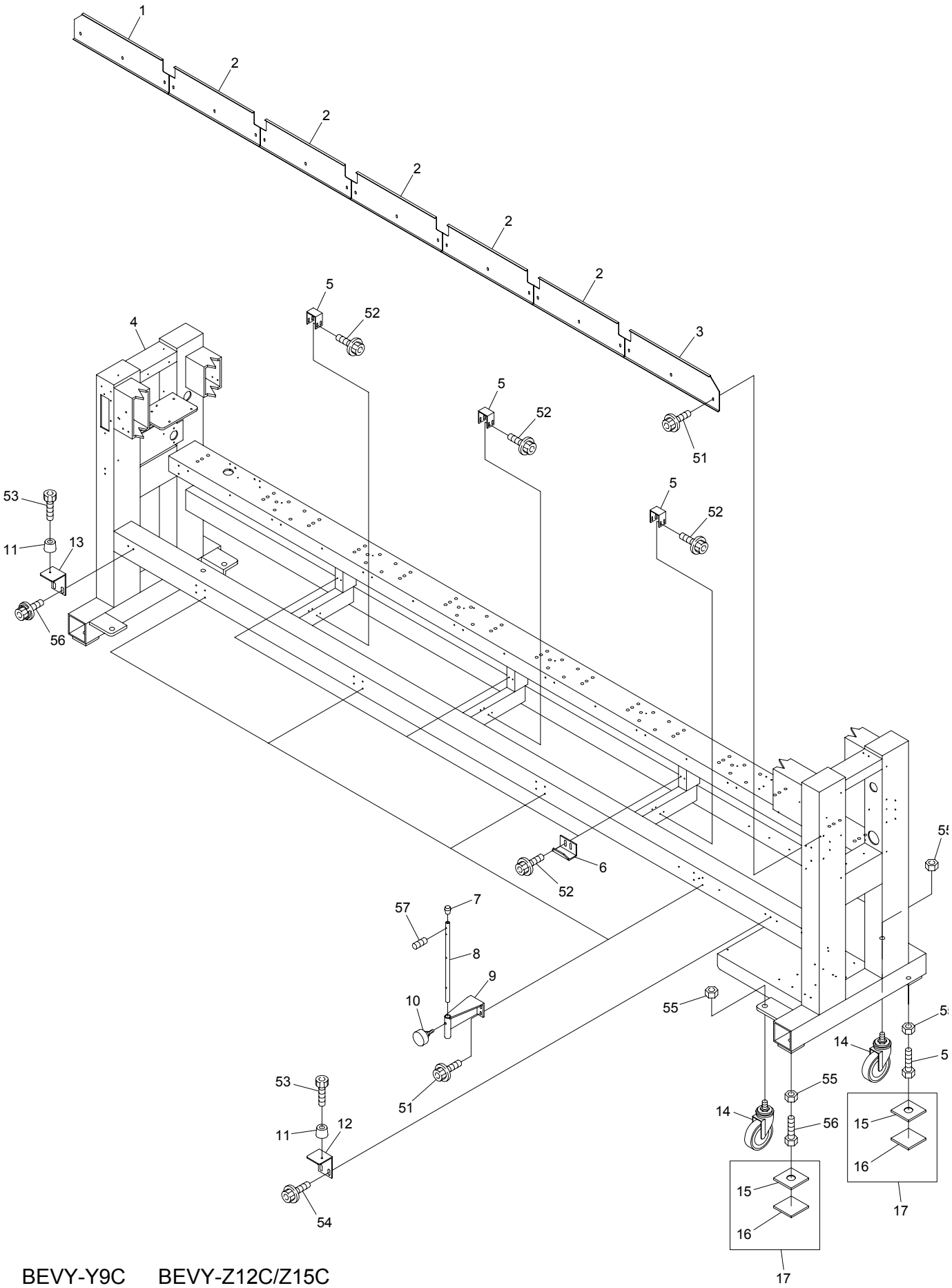

BEVY-Y9C BEVY-Z12C/Z15C

06051

00A-2　Table・Frame A(6T/8T)

ITEM	LIST No.	DESCRIPTION	Q'TY	NOTE
1	SJ140050	Oil store(L) DYHE P=520	1	6T
	SJ140080	Oil store(L) DYHE P=380	1	8T
2	SJ140060	Oil store(Center) DYHE P=520	5	6T
	SJ140090	Oil store(Center) DYHE P=380	7	8T
3	SJ140040	Oil store(R) DYHE P=520	1	6T
	SJ140070	Oil store(R) DYHE P=380	1	8T
4	SJ160961	Frame DYHE-Z12-C06,450×520	1	6T
	SJ160652	Frame BEDYHE-ZQ6-C06 450×520/520	1	6T
	SJ160981	Frame DYHE-Z12-C08,450×380/380	1	8T
	SJ160691	Frame DYHE-ZQ6-C08,450×380/380	1	8T
5	SC140130	Table bracket	3	
6	SC140120	Table stopper	3	
7	A9014161	Rubber foot for pipes(C-31-5)	4	
8	SJ140120	Table stand(DYHE)	4	
9	SJ140130	Table stand bracket(DYHE-C)	4	
10	SJ140220	Table stand fixed knob bolt	4	
11	A9014163	Color rubber foot(C-30-FRB-3225)	2	
12	SC140160	Support table catch stay(R)	1	
13	SC140170	Support table catch stay(L)	1	
14	A9019049	Caster(SSC-125NU)	4	
15	SC160010	Mount base(Compact machine)	4	
16	SC160020	Vibroisolating pad(Compact machine)	4	
17	SC160030	Mount base a'ssy(Compact machine)	4	
51		Hex.socket flange bolt M6×12(Chromate)		
52		Hex.socket flange bolt M5×10(Chromate)		
53		Hex.socket bolt M5×15(With adhesive) Black(Screw lock red)		
54		Hex.socket flange bolt M5×12		
55		Hex.nut M20		
56		Hex.bolt M20×75		
57		Hex.socket set screw M5×20		

00B Table Frame B

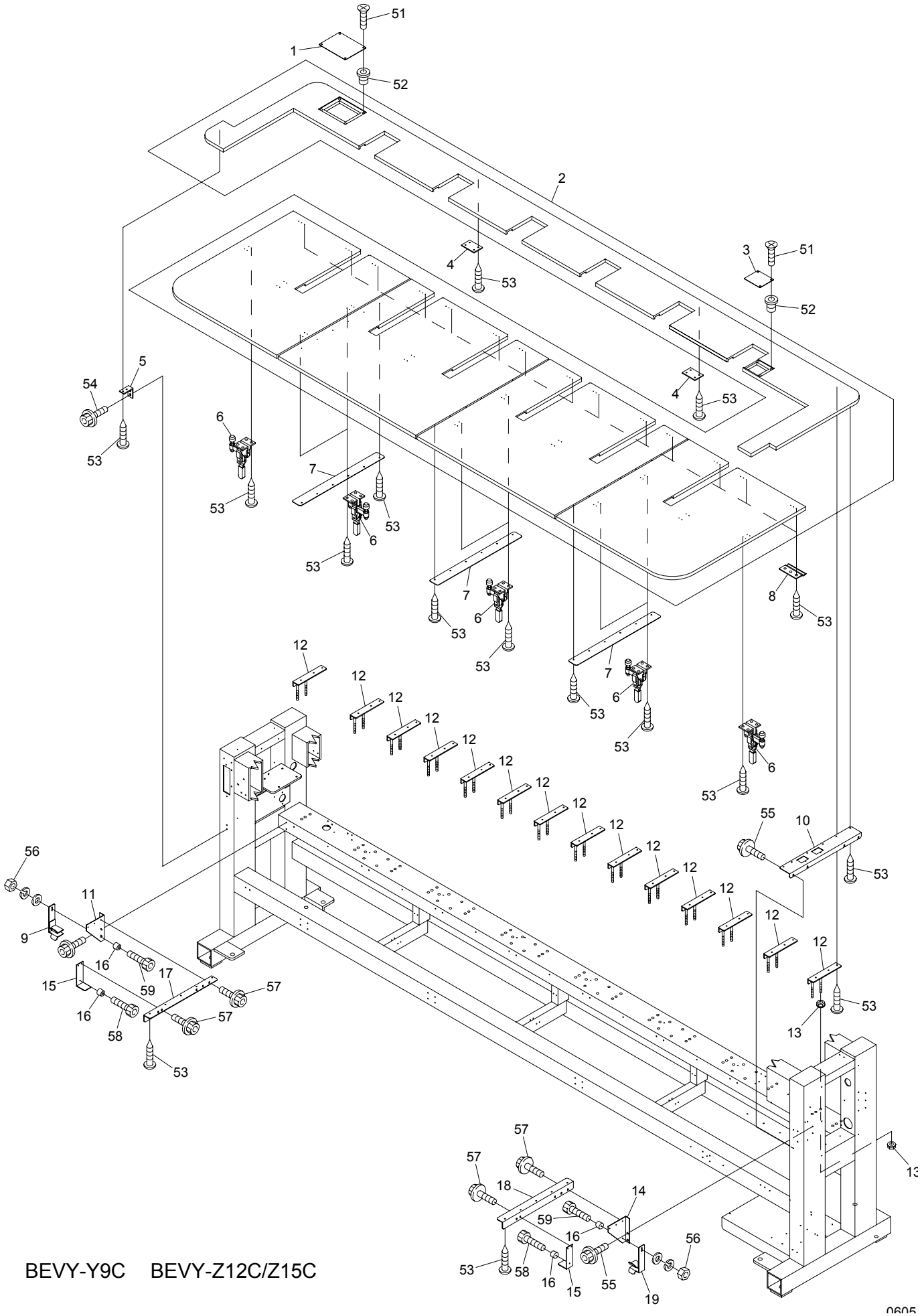
51
1
52
2
3
51
52
4
53
4
53
5
54
53
6
53
7
53
6
53
7
6
53
8
53
12
12
12

00B　Table・Frame B

(H=Head Q'TY)

ITEM	LIST No.	DESCRIPTION	Q'TY	NOTE
1	SC120030	Thread cut service cover	1	
2	SJ120001	Table BEDYHE-ZQ-C02 450×520/520	1	2T
	SJ120011	Table BEDYHE-ZQ-C04 450×520/520	1	4T
	SJ120031	Table BEDYHE-ZQ-C06 450×520/520	1	6T
	SJ120042	Table BEDYHE-ZQ-C06 450×520/520	1	8T
3	SC120040	Encoder service cover	1	
4	RQ120080	Jointed plate	2	
5	SC140090	Table support angle	1	
6	A9013070	Toggle clamp(KAKUTA No.40A)	2	2T
			6	4T
			8	6T/8T
7	SC120010	Joint plate	2	4T
			3	6T/8T
8	HM140120	Table stopper(Front)	H×2＋2	
9	SJ140110	Table support L-lower(DYHE-C)	1	
10	SJ140020	R-side stand table support(DYHE)	1	
11	SJ140010	LH-table support bracket(DYHE)	1	
12	SC140140	Table support(L=200)	H×2＋2	
13	SC210010	Adjust nut M10	２４	2T
			４０	4T
			５６	6T
			７２	8T
14	SJ140000	RH-table support bracket(DYHE)	1	
15	SC140041	Table support stay	2	
16	A9014163	Color rubber foot(C-30-FRB-3225)	4	
17	SC140030	LH-table support	1	
18	SC140020	RH-table support	1	
19	SJ140100	Table support R-lower(DYHE-C)	1	
51		Flush screw(Under cut) M4×8		
52		Rag nut(C) M4		
53		Pierce screw M5×19		
54		Hex.socket flange bolt M6×12		
55		Hex.socket flange bolt M6×12(Chromate)		
56		Hex.nut M5		
57		Hex.socket flange bolt M5×10(Chromate)		
58		Hex.socket bolt M5×15(Black)		
59		Hex.socket bolt M5×30(Black)		

01A Head Bed A

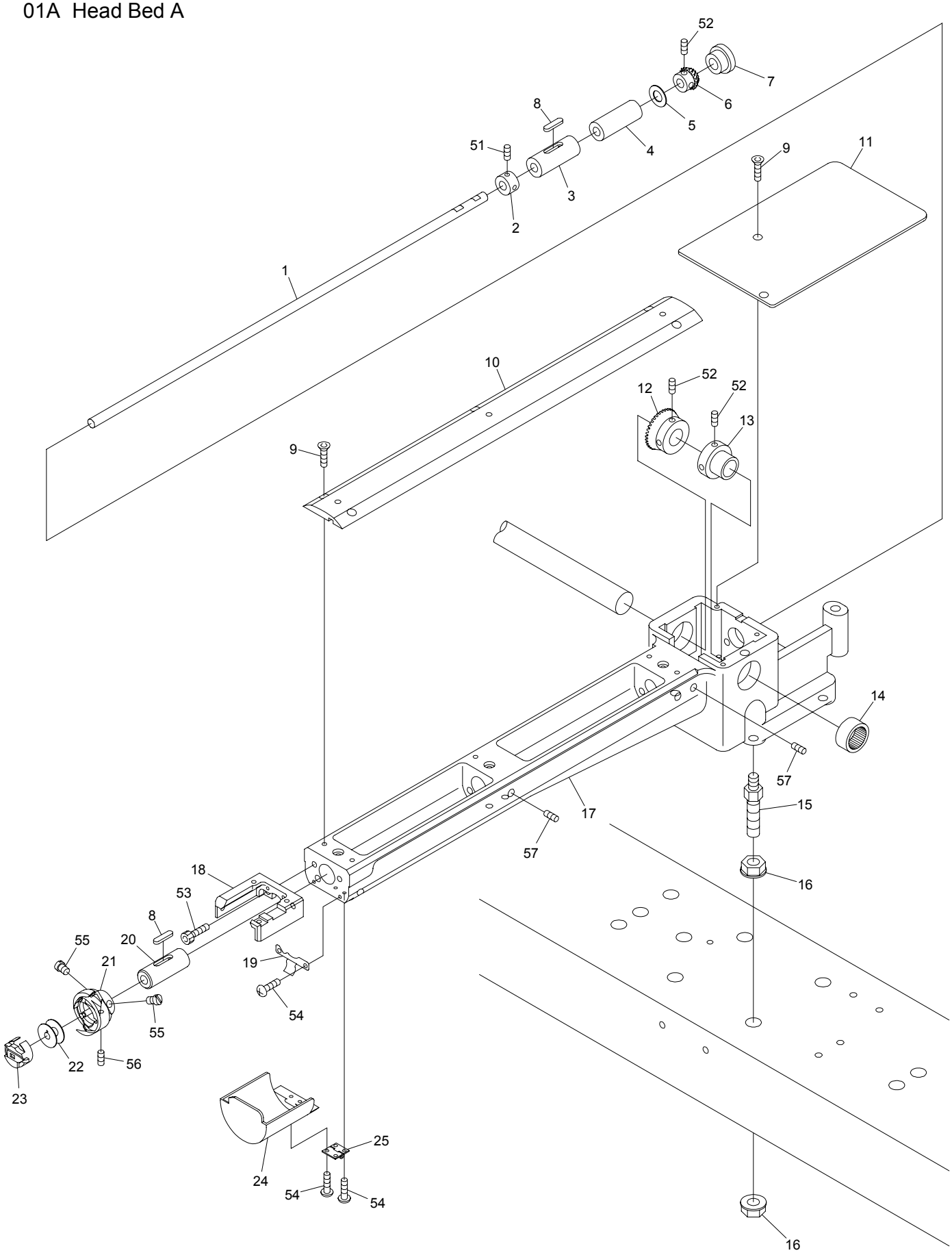

BEVY-Y9C

BEDSHE-ZQ-BS BEVS-Z12C/Z15C BEVY-Z12C/Z15C BEDLHE-Z12/ZQ-C

01A　Head・Bed A

(H=Head Q'TY)

ITEM	LIST No.	DESCRIPTION	Q'TY	NOTE
1	HS210021	Lower shaft	H×1	Small bobbin 小釜
	HS210020	Lower shaft	H×1	Middle bobbin 中釜
2	KF220290	Lower shaft collar	H×1	
3	KF220230	Lower shaft metal(Front)	H×1	
4	HS220010	Lower shaft metal(Cylinder back side)	H×1	
5	HT220061	Thrust washer (Lower shaft)	H×1	
6	SJ220010	Lower shaft gear(Small gear,Korean)	H×1	
7	A9014059	Gromet MG(MG-1)	H×1	
8	KL220140	Oil felt C(5×25×20)	H×2	
9	KX250080	Throat plate set screw(Hex.socket)	H×7	
10	SJ210120	Cylinder bed cover,correspond barrel frame	H×1	
11	HS210042	Bed cover	H×1	
12	SJ320010	Lower shaft gear(Large gear,Korean)	H×1	
13	HP321090	Lower shaft connecting shaft collar	H×1	
14	A9011111	Needle bearing(TLA-2012Z)	H×1	
15	SC210000	Adjust bolt	H×4	
16	SC210010	Adjust nut M10	H×8	
17	SJ210090	Bsrrel bed(Small bobbin) correspond barrel frame	H×1	Small bobbin 小釜
	SJ210150	Bsrrel bed R-type(Middle bobbin) correspond barrel frame	H×1	Middle bobbin 中釜
18	SJ210080	Throat plate base,correspond barrel frame	H×1	
19	KC250482	Barrel bed cover hold spring	H×1	
20	KF220240	Vertical shaft metal(Upper)	H×1	
21	KF220700	Rotating hook HSL-ATR(M1QTS)	H×1	Small bobbin 小釜
	KF221040	Middle bobbin for automatic feed oil HSM-A(MQ2L)	H×1	Middle bobbin 中釜
22	KF220530	Bobbin	H×1	Small bobbin 小釜
	KF220421	Bobbin (HSM)(DBM)(For aluminum,middle bobbin)	H×1	Middle bobbin 中釜
23	KF221020	Bobbin case(4B19-S6-BA)	H×1	Small bobbin 小釜
	KF220302	Bobbin case BC-DBM(Z2)-NBL5 middle bobbin	H×1	Middle bobbin 中釜
24	HS210031	Barrel bed cover(Short type)	H×1	
25	A9012027	Hinge(TH-TN-72)	H×1	
51		Hex.socket set screw SM1/4 40×4		
52		Hex.socket set screw M5×6		
53		Hex.socket bolt M5×15		
54		Pan screw M3×6		
55		Screw(SM11/64 40×5)		
56		Set screw(SM11/64 40×5)		

01B Head Bed B

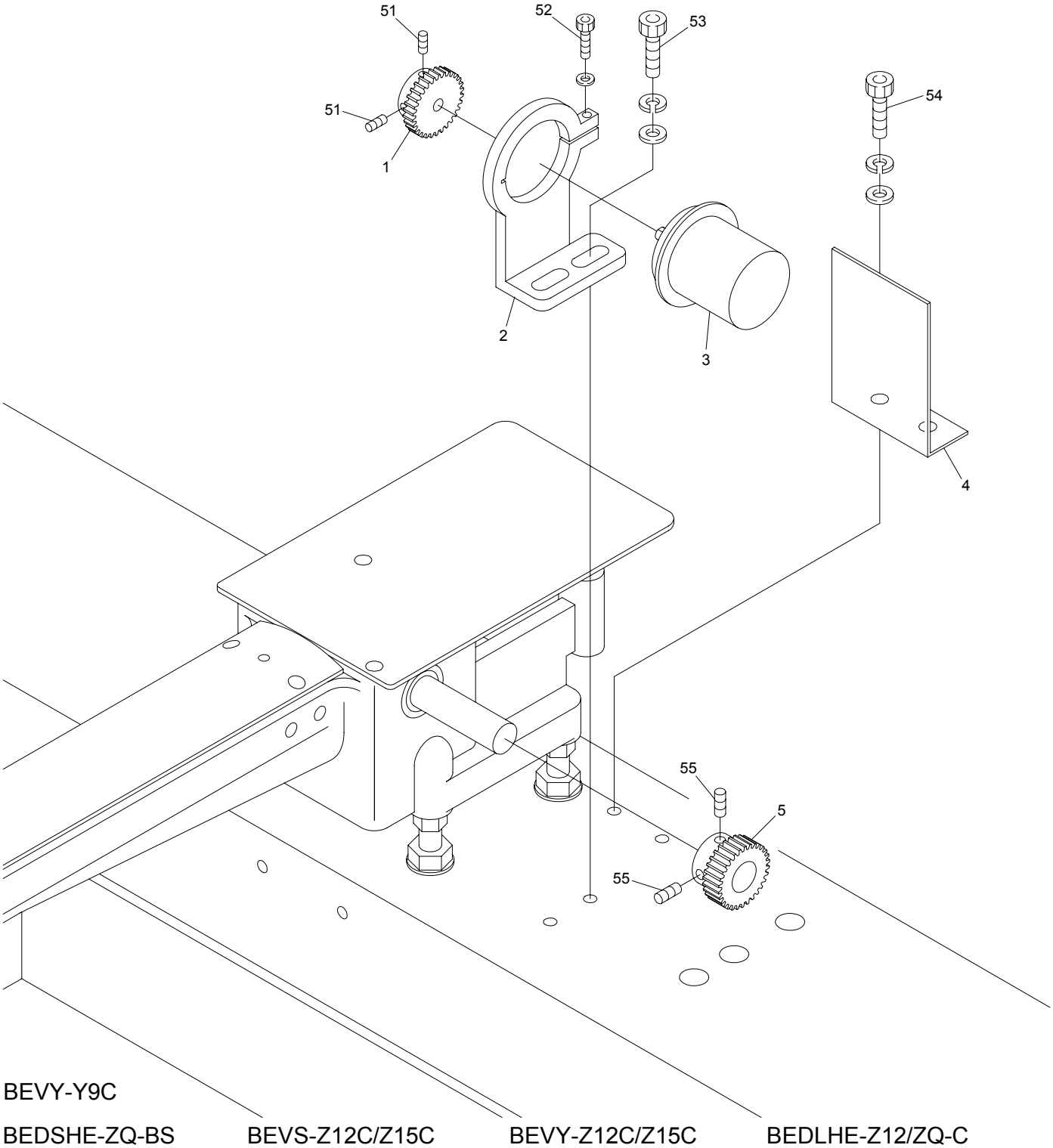

01B Head･Bed B

ITEM	LIST No.	DESCRIPTION	Q'TY	NOTE
1	HP321720C	Encoder driving gear No.2	1	
2	SC330131	Encoder retainer	1	
3	KN511020	Position coder TS5307N54	1	
4	SC250080	Encoder safety cover	1	
5	HP321710C	Encoder driving gear No.1	1	
51		Hex.socket set screw M4×8		
52		Hex.socket bolt M4×14		
53		Hex.socket bolt M6×25		
54		Hex.socket bolt M6×15		
55		Hex.socket set screw M5×5		

02A Thread cut A

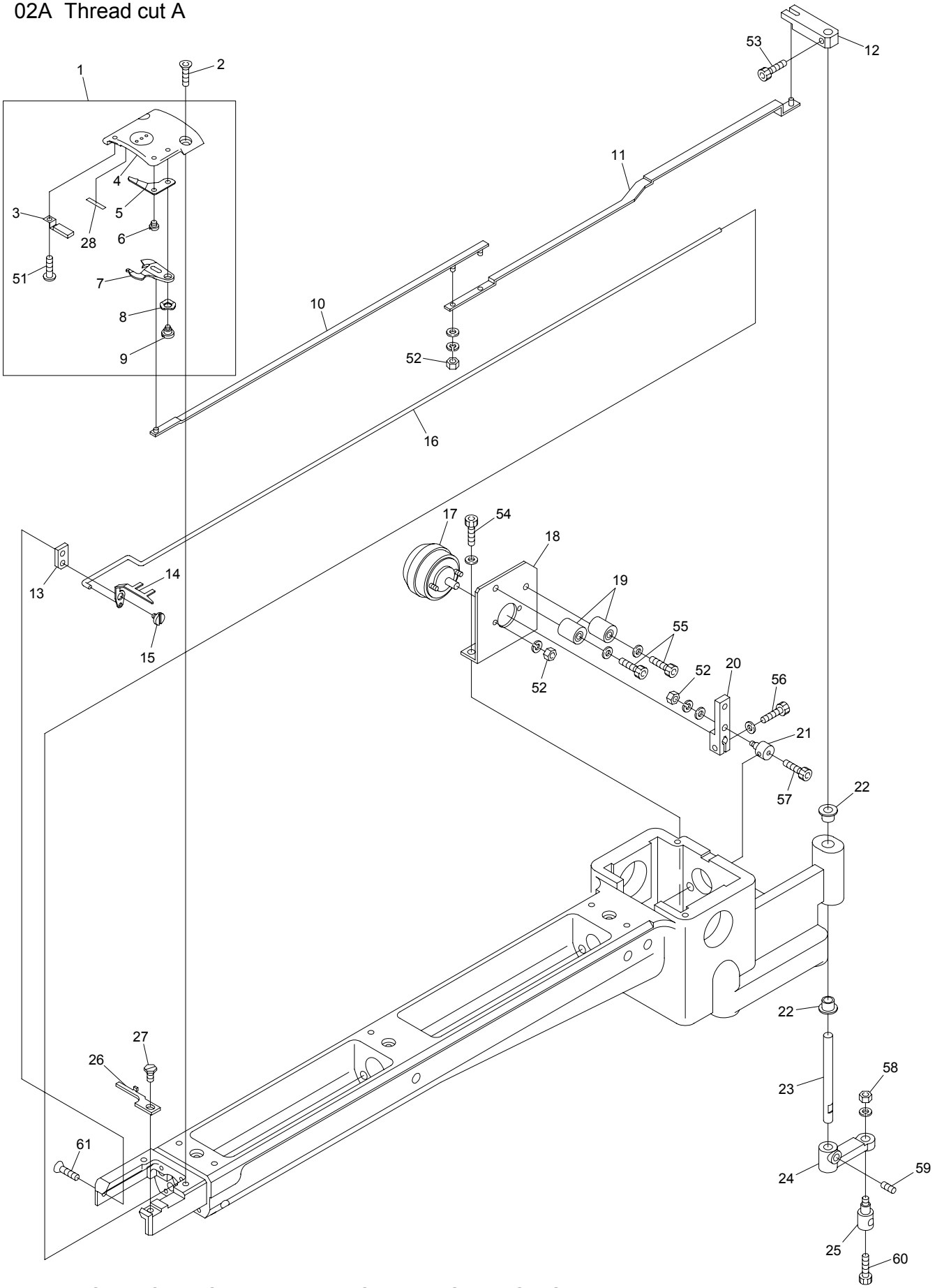

BEVS-Z12C/Z15C BEVY-Y9C BEDSHE-ZQ-BS

BEVY-Z12C/Z15C BEVT-Z1201C/Z1501C BEDLHE-Z12/ZQ-C

02A Thread cut A

(H=Head Q'TY)

ITEM	LIST No.	DESCRIPTION	Q'TY	NOTE
1	SJ270121	Throat plate a'ssy(With lower thread support) Barrel frame correspondence	H×1	
2	KX250080	Throat plate set screw(Hex.socket)	H×2	
3	HT270182	Lower thread support stay(Cylinder) CMP	H×1	
4	SJ270020	Cylinder throat plate Barrel frame correspondence	H×1	
5	SJ270040	Fixed knife barrel frame correspondence	H×1	
6	KX270010	Fixed knife set screw	H×1	
7	SJ270030	Driving knife barrel frame correspondence	H×1	
8	A9013066	Wave washer(WW5)(SK)	H×1	
9	KN272010	Lower thread knife rotary shaft	H×1	
10	HS210111	Lower thread knife drive rod A	H×1	
11	HS210121	Lower thread knife drive rod B	H×1	
12	HS210100	Lower thread knife drive lever upper	H×1	
13	HS210051	Hook fixed stay(Short type)	H×1	
14	HS210300	Hook(Cylinder MK5)	H×1	
15	KC271001	Upper thread knife rotary shaft	H×1	
16	HS210070	Hook drive rod	H×1	
17	A9056008	Rotary solenoid 3ER25-35×3×8×9	H×1	
18	SJ210040	Solenoid stay(Short small bobbin)	H×1	
	HS210060	Solenoid stay(For middle bobbin)	H×1	
19	KN272401	Stopper eccentric	H×2	
20	KC271940C	Soleroid lever A	H×1	
21	HS210080	Connecting clamp	H×1	
22	A9011284	DU bush with flange(K5F0606-12)	H×2	
23	HS210090	Knife lever rotary shaft	H×1	
24	KN271560C	Knife lever	H×1	
25	HM270000	Connecting bar clamp	H×1	
26	KX270000	Rotating hook bobbin case holder position bracket	H×1 H×1	
27	KX270430	Screw(Cylinder)	H×1	
28	SJ270110	Lower thread support hook and loop fastener (For cylinder)	H×1	
51		Pan screw M3×3		
52		Hex.nut M3		
53		Hex.socket bolt M4×6		
54		Hex.socket bolt M4×8(With plain washer)		
55		Hex.socket bolt M4×18		
56		Hex.socket bolt M4×10		
57		Hex.socket bolt M3×5		
58		Hex.nut M4		
59		Hex.socket set screw M5×6		
60		Hex.socket bolt M4×8		
61		Hex.socket flush screw M4×6		

02B Thread cut B

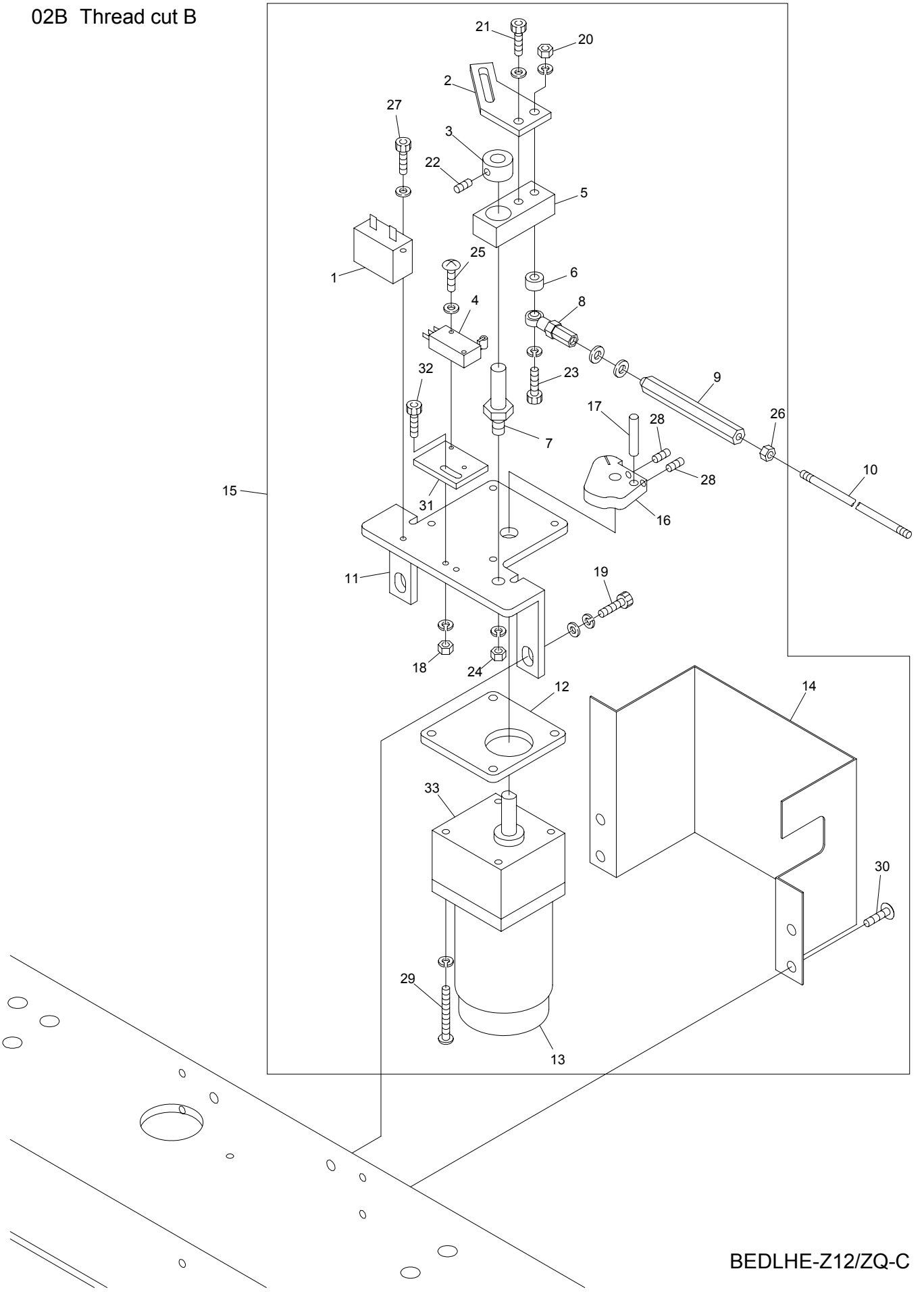

BEDLHE-Z12/ZQ-C

BEVY-Y9C BEDSHE-ZQ-BS BEVS-Z12C/Z15C BEVY-Z12C/Z15C

0606

02B Thread cut B

ITEM	LIST No.	DESCRIPTION	Q'TY	NOTE
1		Condenser(CH45UL)	1	Motor accessory モーター付属品
2	HS270030	Motor cam lever	1	
3	KC330180	Collar φ10	1	
4	A9052078	Micro switch(D2VW-01L2A-1)	1	
5	KN271782	Drive lever	1	
6	HM270010	Motor lever collar	1	
7	KN271750	Motor lever rotary shaft	1	
8	A9012002	Uniball joint(PR-6)	1	
9	KC330510	Hex.connecting rod(Large)	1	
10	KC330410	Lock connecting rod(2M)	3	
11	SJ270070	Thread cutter motor bracket (Barrel frame correspondence)	1	
12	SJ270080	Motor spacer(Barrel frame correspondence)	1	
13	A9065092	Reversible motor 3RJ10GB-AUL-E4	1	
14	SJ270060	Thread cutter central drive cover (Barrel frame correspondence)	1	
15	SJ270100	Thread cutter central drive a'ssy MK5 (Barrel frame) CE	1 set	Z12
	SJ270050	Thread cutter central drive a'ssy MK5 (Barrel frame)	1 set	Z15
16	SJ270090	Drive cam(Barrel frame correspondence)	1	
17	KN272350	Drive pin	1	
18		Hex.nut M3		
19		Hex.socket bolt M8×20		
20		Hex.nut M6		
21		Hex.socket bolt M6×12		
22		Hex.socket set screw M5×6		
23		Hex.socket bolt M6×55		
24		Hex.nut M8		
25		Truss screw M3×15,M3×20		
26		Hex.nut M5		
27		Hex.socket bolt M4×10		
28		Hex.socket set screw M5×6		
29		Pan screw M5×65		
30		Truss screw M6×10		
31	HS270070	Switch fixed bracket(Cylinder)		
32		Hex.socket bolt M4×12		
33	A9065107	Gear head 3GB36K	1	
	A9053082	Thread cutter motor cable 0.75×6×4M	1	

02C Thread cut C

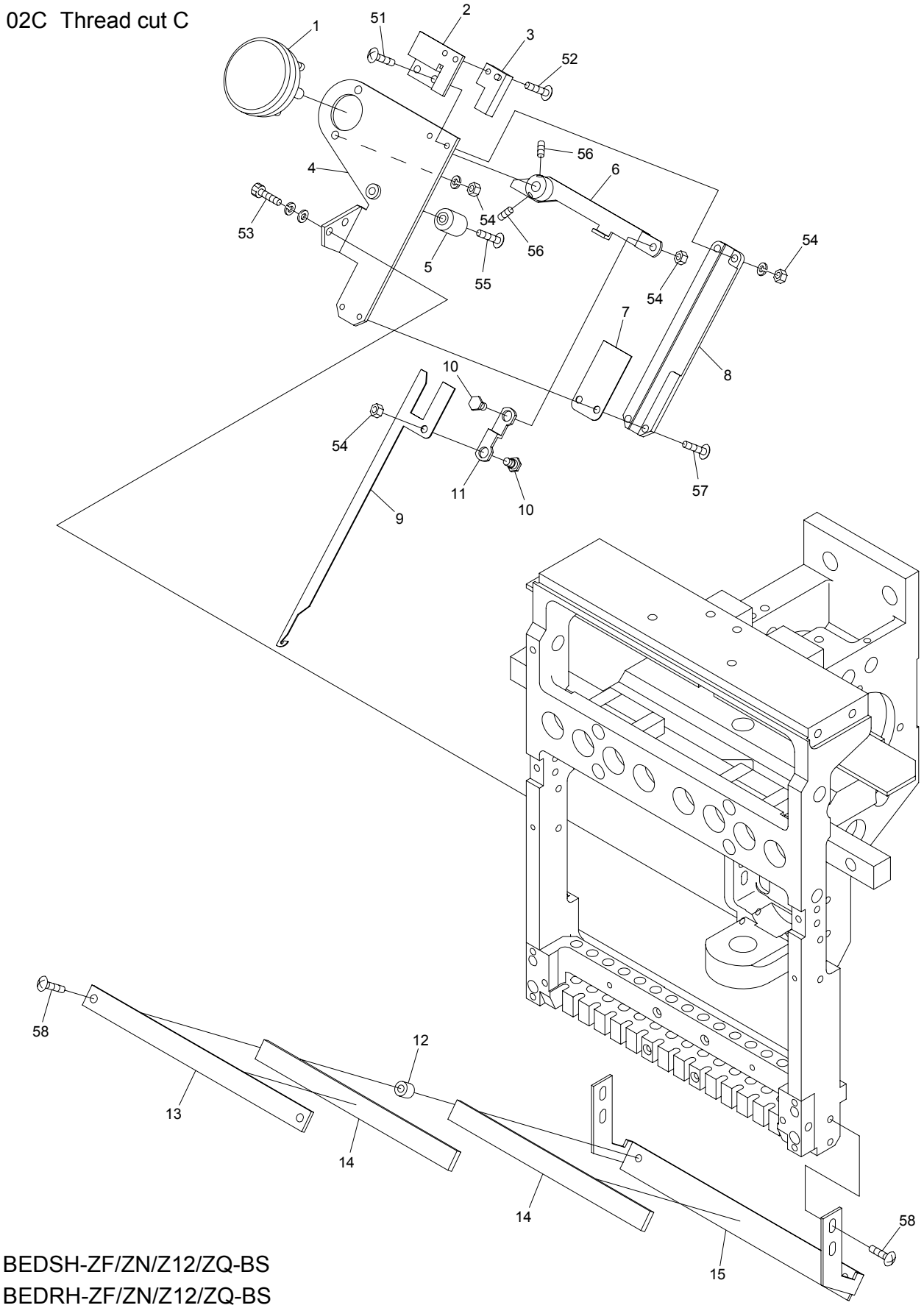

BEDSH-ZF/ZN/Z12/ZQ-BS
BEDRH-ZF/ZN/Z12/ZQ-BS
BEDSHE-ZQ-BS
BEVS-Z9/Z12/Z15 BEVS-Z12C/Z15C BEDYH-Z12/ZQ BEDYH-Z12-C
BEDLH-Z12/ZQ BEDLH-Z12-C BEDLHE-Z12/ZQ-C
BEVY-Z12/Z15 BEVY-Z12F BEVY-Z12C/Z15C BEVT-Z1201C/Z1501C

02C Thread cut C

(H=Head Q'TY)

ITEM	LIST No.	DESCRIPTION	Q'TY	NOTE
1	A9056038	Rotary solenoid 4ER45-33×3×8×9 (ETL)	H×1	
2	KL270260C	Switch stay	H×1	
3	A9052028	Proximity switch(RS-603)	H×1	
4	SG270081	Thread away base	H×1	
5	KN272401	Stopper eccentric	H×1	
6	SG270090	Thread away solenoid lever	H×1	
7	KL270450	Hook guide plate	H×1	
8	KL270091	Thread away hook guide	H×1	
9	KL270101	Thread away hook	H×1	
10	KL270131C	Lever connecting pin	H×2	
11	KL270120C	Connecting plate	H×1	
12	KX270070	Thread guard disk spacer	H×2	
13	SG270040	Thread guard disk bracket upper	H×1	Z12
	RD270040	Thread guard disk bracket upper	H×1	Z15
14	SG270100	Napped plate	H×2	Z12
	RD270020	Napped plate	H×2	Z15
15	SG270030	Thread guard disk bracket(Z12)	H×1	Z12
	LA270080	Thread guard disk bracket(ZQ-A)	H×1	Z15
51		Truss screw M3×10		
52		Truss screw M3×6(With plain washer)		
53		Hex.socket bolt M4×12(Spring washer)		
54		Hex.nut M4(With spring washer)		
55		Truss screw M4×16		
56		Hex.socket set screw M4×8		
57		Truss screw M3×8		
58		Truss screw M4×12		

03 Take up lever

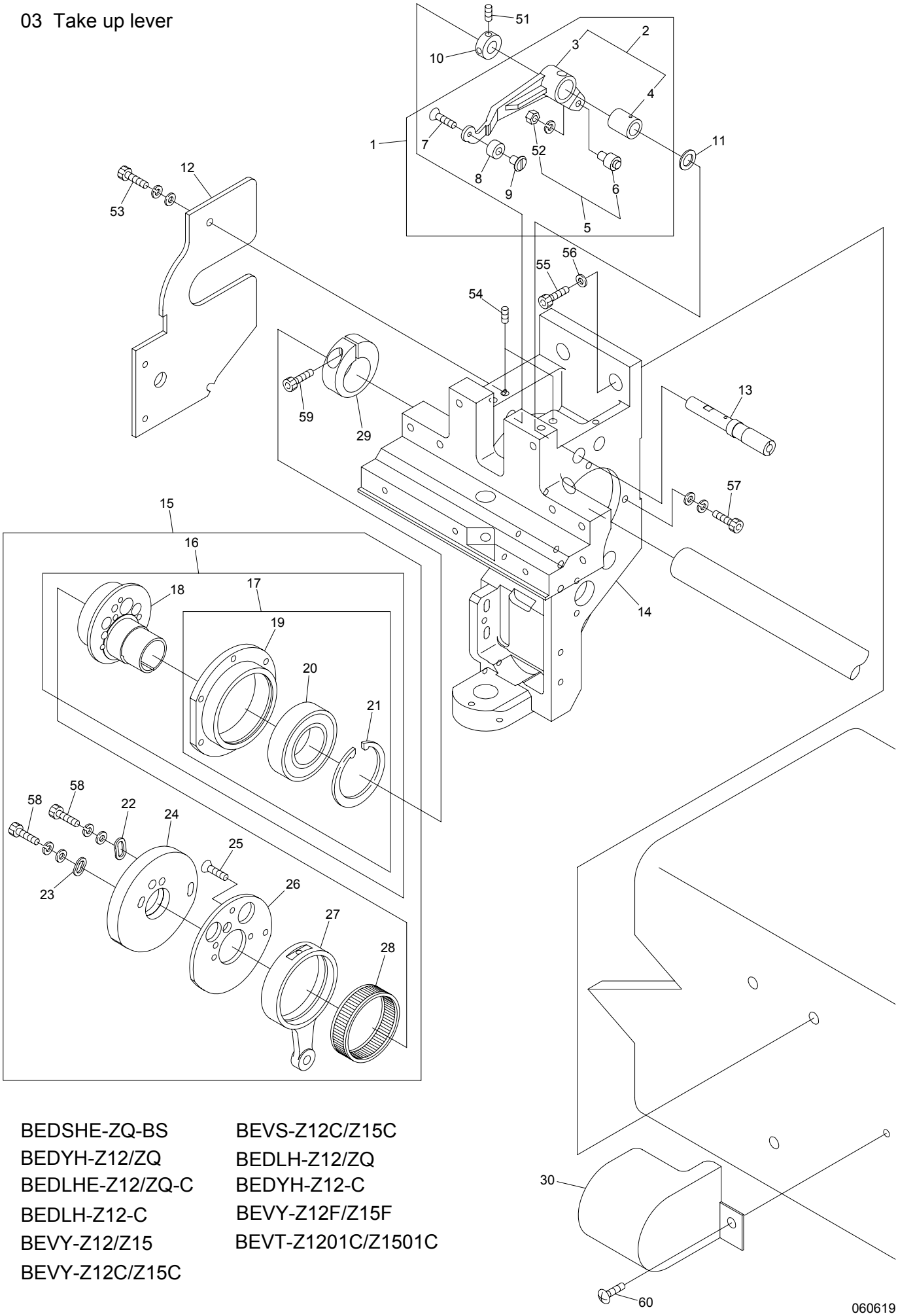

BEDSHE-ZQ-BS
BEDYH-Z12/ZQ
BEDLHE-Z12/ZQ-C
BEDLH-Z12-C
BEVY-Z12/Z15
BEVY-Z12C/Z15C
BEVS-Z12C/Z15C
BEDLH-Z12/ZQ
BEDYH-Z12-C
BEVY-Z12F/Z15F
BEVT-Z1201C/Z1501C

060619

03 Take up lever

(H=Head Q'TY)

ITEM	LIST No.	DESCRIPTION	Q'TY	NOTE
1	RV230070	Take up lever driving lever a'ssy	H × 1	
2	RH230801	Take up lever driving lever(Metal)	H × 1	
3	RH230311	Take up lever driving lever	H × 1	
4	RH230810	Take up lever metal	H × 1	
5	KF230501	Take up lever roller a'ssy	H × 1	
6	KF230680	Cam followers(KR×4×7.9×15-1P×1)	H × 1	
7	HB230650	Flush screw(With adhesion)	H × 1	
8	RV230060	Take up lever driving roller	H × 1	
9	RD230130	Take up lever driving roller shaft	H × 1	
10	HB230800	Take up lever drive lever fixed pin set collar	H × 1	
11	RH230610	Thrust washer	H × 1	
12	SL230130	Arm reinforcement bracket	H × 1	
13	RH230320	Take up lever driving lever fixing pin	H × 1	
14	SL210090	Arm	H × 1	1st head 1頭目
	SL210081	Arm	H × 1	Except for 1st head 1頭目除く
15	SG230350	Take up lever･Needle bar drive a'ssy	H × 1	
16	RN230010	Needle bar driving cam a'ssy	H × 1	
17	RN230030	Bearing case a'ssy	H × 1	
18	RN230020C	Needle bar driving cam(Eccentric 9.2 φ20)	H × 1	
19	RN230040	Bearing case	H × 1	
20	A9010073	Ball bearing(6005ZZ)	H × 1	
21	A9012421	C-ring for hole φ47	H × 1	
22	HB230080C	Washer for cam(2)	H × 1	
23	HB230070C	Washer for cam(1)	H × 1	
24	SG230340	Take up lever cam H6RN(φ20)	H × 1	
25	HB230620	Flush screw	H × 3	
26	RH230300	Take up lever cam base	H × 1	
27	RH230280	Needle bar crank rod	H × 1	
28	RH230271	Needle bearing	H × 1	
29	RH230330	Needle bar driving cam set collar	H × 1	
30	SJ250240	Side cover(First head) DYHE	1	
51		Hex.socket set screw M4×4(With adhesion)		
52		Hex.nut M4(With spring washer)		
53		Hex.socket bolt M4×10(With washers)		
54		Hex.socket set screw M5×5		
55		Hex.socket bolt M8×25		
56		Disc spring 8		
57		Hex.socket bolt M4×15(With washers)		
58		Hex.socket bolt M4×8		
59		Hex.socket bolt M5×18		
60		Truss screw M5×8		

04A-1 Needle bar A(Z12)

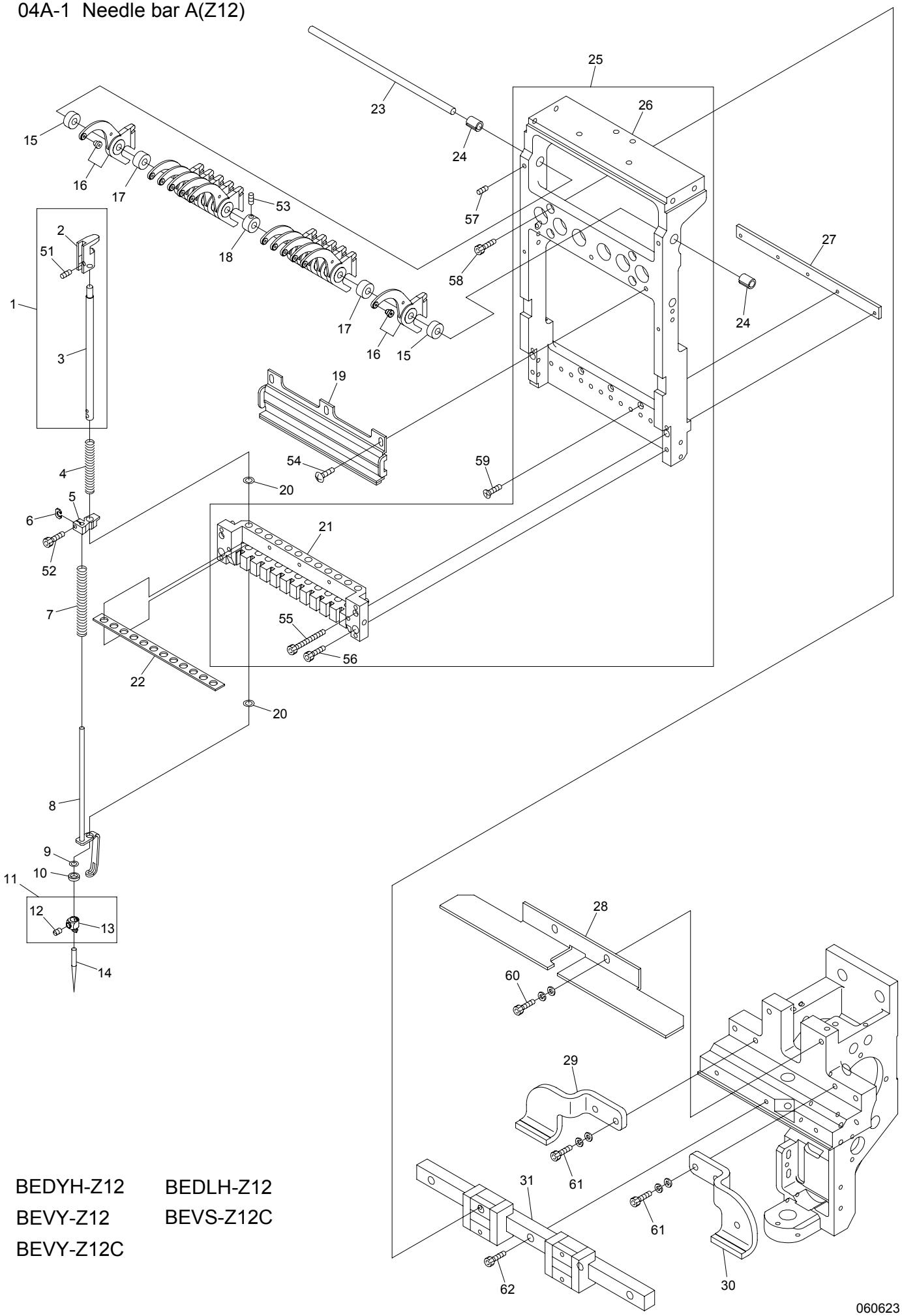

BEDYH-Z12 BEDLH-Z12

BEVY-Z12 BEVS-Z12C

BEVY-Z12C

060623

04A-1 Needle bar A(Z12)

(H=Head Q'TY)

ITEM	LIST No.	DESCRIPTION	Q'TY	NOTE
1	SG230330	Slide block a'ssy	H×1	
2	RD230480	Needle bar a'ssy	H×12	
3	RD230490	Needle bar guide	H×12	
4	RH230410	Needle bar	H×12	
5	KV230040	Needle bar spring(Upper,for thick type)	H×12	
6	HT230330	Cloth hold set clamp	H×12	
7	HT230263	Washer for set clamp	H×12	
8	SG230220	Needle bar spring lower	H×12	
9	RD230370	Cloth hold(ZQ4)	H×12	
10	KF230910	O-ring(AN6227-5)	H×12	
11	HT230120	Washer 2.4	H×12	
12	RH230440	Needle clamp(With hook,set screw)	H×12	
13	RH230460	Needle clamp screw	H×12	
14	RH230450	Needle clamp(With hook)	H×12	
15	FN070011RG	Needle(DBXK5 11RG)	H×12	
16	SG230230	Take up lever spacer(t=6.1)	H×2	
17	KX230152	Take up lever(ZN multi)	H×12	
18	KX230141	Take up lever spacer	H×10	
19	RD230201	Take up lever spacer collar	H×1	
20	SG230040	Needle bar stocker	H×1	
21	A9014167	O-ring SS065	H×24	
22	SG230070	Needle bar base	H×1	
23	SG230150	Needle bar felt	H×1	
24	SG230140	Take up lever shaft(Z12)	H×1	
25	SG230200	Take up lever collar(Z12)	H×2	
26	SG230050	Slide block set	H×1-1	Except for 1st head
	SG230360	Slide block set (For color change connecting head)	1	1st head 1頭目
27	SG230060	Slide block	H×1	
28	SG230110	Bearing plate	H×1	
29	SG230410	Take up lever stocker(Z12)	H×1	
30	SL230200	LM-guide support left	H×1	1st head 1頭目
31	SL230190	LM-guide support right	H×1	1st head 1頭目
32	SG230390	LM-guide(Z12)	H×1	
51		Hex.socket double point screw M4×4		
52		Hex.socket bolt M3×8		
53		Hex.socket set screw M4×4		
54		Truss screw M4×8		
55		Hex.socket bolt M3×35		
56		Hex.socket bolt M4×12		
57		Hex.socket set screw M4×8		
58		Hex.socket bolt M4×10		
59		Hex.socket flush screw M3×14		
60		Hex.nut M4(With washers)		
61		Hex.socket bolt M5×18(With washers)		
62		Hex.socket bolt M4×14		

04A-2 Needle bar A(Z15)

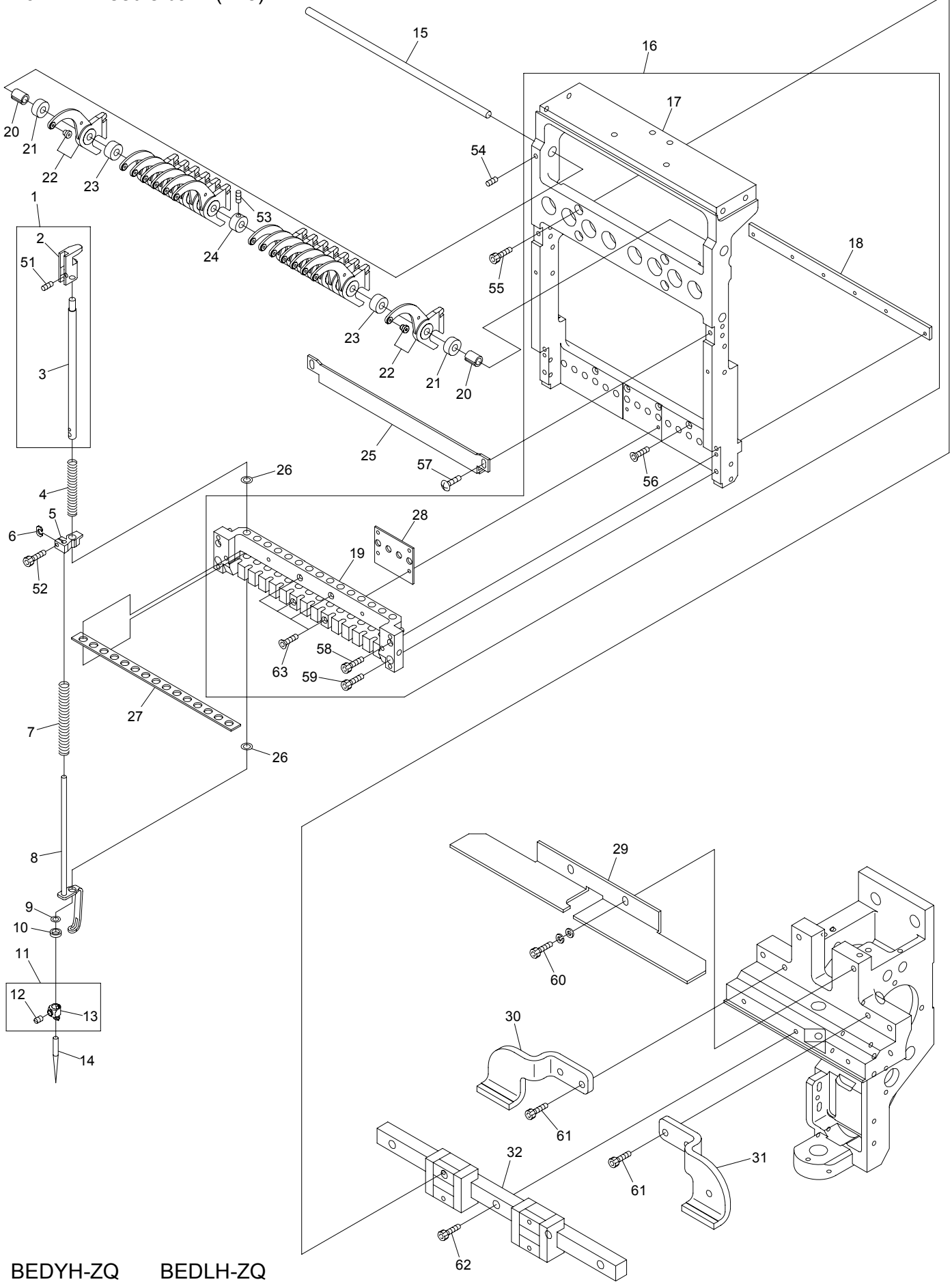

BEDYH-ZQ BEDLH-ZQ
BEVS-Z15C BEVY-Z15C
BEVY-Z15

060623

04A-2 Needle bar A(Z15)

(H=Head Q'TY)

ITEM	LIST No.	DESCRIPTION	Q'TY	NOTE
1	RD230480	Needle bar a'ssy	H×15	
2	RD230490	Needle bar guide	H×15	
3	RH230410	Needle bar	H×15	
4	KV230040	Needle bar spring(Upper,for thick type)	H×15	
5	HT230330	Cloth hold set clamp	H×15	
6	HT230263	Washer for set clamp	H×15	
7	SG230220	Needle bar spring lower	H×15	
8	RD230370	Cloth hold(ZQ4)	H×15	
9	KF230910	O-ring(AN6227-5)	H×15	
10	HT230120	Washer 2.4	H×15	
11	RH230440	Needle clamp(With hook,set screw)	H×15	
12	RH230460	Needle clamp screw	H×15	
13	RH230450	Needle clamp(With hook)	H×15	
14	FN070011RG	Needle(DBXK5 11RG)	H×15	
15	SL230070	Take up lever shaft(ZQ6)	H×1	
16	SL230001	Slide block set(ZQ6)	H×1-1	Except for 1st head
	SL230011	Slide block set (For color change connecting head)	1	1st head 1頭目
17	SL230021	Slide block	H×1	
18	RD230060	Bearing plate	H×1	
19	SL230031	Needle bar base	H×1	
20	SG230200	Take up lever collar(Z12)	H×2	
21	SG230230	Take up lever spacer(t=6.1)	H×2	
22	KX230152	Take up lever(ZN multi)	H×15	
23	KX230141	Take up lever spacer	H×13	
24	RD230201	Take up lever spacer collar	H×1	
25	SL230040	Needle bar stocker(ZQ6)	H×1	
26	A9014167	O-ring SS065	H×30	
27	SL230080	Needle bar felt	H×1	
28	SL230090	Slide block sim	H×1	
29	RV230180	Take up lever stocker	H×1	
30	SL230200	LM-guide support left	H×1	1st head 1頭目
31	SL230190	LM-guide support right	H×1	1st head 1頭目
32	SL230140	LM-guide(ZQ6)	H×1	
51		Hex.socket double point screw M4×4		
52		Hex.socket bolt M3×8		
53		Hex.socket set screw M4×4		
54		Hex.socket set screw M4×8		
55		Hex.socket bolt M4×10		
56		Hex.socket flush screw M3×14		
57		Truss screw M4×8		
58		Hex.socket bolt M3×35		
59		Hex.socket bolt M4×12		
60		Hex.socket bolt M5×15(With washers)		
61		Hex.socket bolt M5×18(With washers)		
62		Hex.socket bolt M4×14		

04B Needle bar B

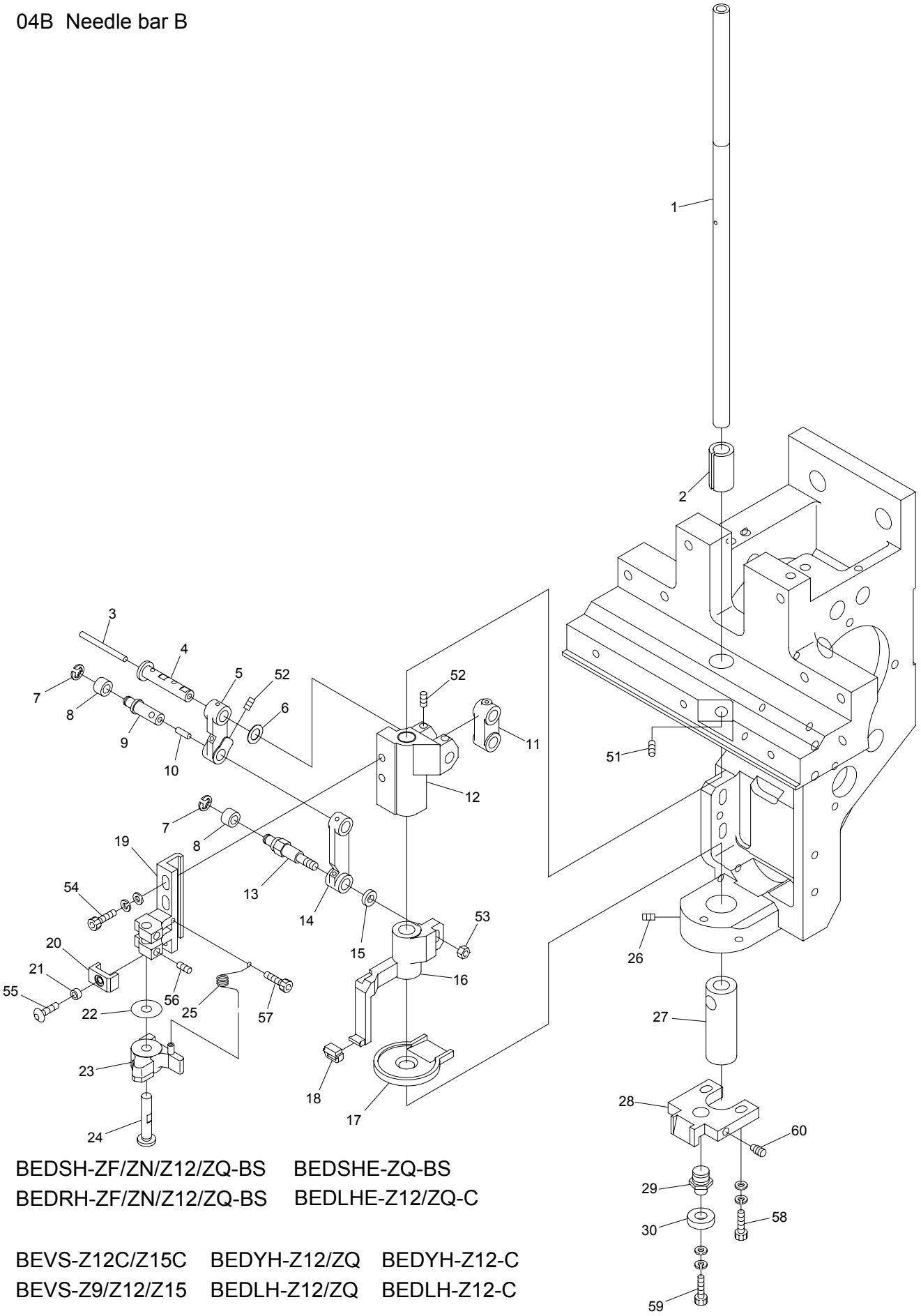

BEDSH-ZF/ZN/Z12/ZQ-BS BEDSHE-ZQ-BS
BEDRH-ZF/ZN/Z12/ZQ-BS BEDLHE-Z12/ZQ-C

BEVS-Z12C/Z15C BEDYH-Z12/ZQ BEDYH-Z12-C
BEVS-Z9/Z12/Z15 BEDLH-Z12/ZQ BEDLH-Z12-C

BEVY-Z12/Z15 BEVY-Z12F BEVY-Z12C/Z15C BEVT-Z1201C/Z1501C

04B Needle bar B

(H=Head Q'TY)

ITEM	LIST No.	DESCRIPTION	Q'TY	NOTE
1	SG230170	Driving shaft	H×1	
2	RD230150	Driving shaft bush upper(BEMAX)	H×1	
3	HT230750	Oil core(30mm)	H×1	
4	HT230471	Small link pin	H×1	
5	HT230491	Link(Small)	H×1	
6	HT230730	Shim ring(φ10 t=0.3)	H×1	
7	A9012127	E-ring(φ3)	H×2	
8	KF230530	Roller(For take up lever)	H×2	
9	HT230450	Link roller joint pin	H×1	
10	HT230760	Oil core(8mm)	H×1	
11	HB230200	Needle bar driving link	H×1	
12	HT230510	Needle bar driver slide block	H×1	
13	SG230180	Link roller joint pin(Large)	H×1	
14	HT230480	Link(Large)	H×1	
15	SG230190	Washer for joint pin	H×1	
16	SG230031	Cloth hold support slide block	H×1	
17	SG230000	Oil receive plate	H×1	
18	HT230340	Cloth hold support rubber	H×1	
19	HT230290	Needle bar beat fixing base	H×1	
20	HT230520	Needle bar driving stopper	H×1	
21	A9012368	Spacer(Roll bush)	H×1	
22	RH230550	Shim ring	H×1	
23	RH230540	Needle bar driver	H×1	
24	HT230280	Needle bar driver pin	H×1	
25	HT230560	Needle bar driver return spring	H×1	
26	A9012415	Double point screw M6×7(P0.75)	H×2	
27	SL230180	Driving shaft bush(Lower)	H×1	
28	LA230140	Bearing guide	H×1	
29	SG230300	Bearing pin	H×1	
30	A9010065	Ball bearing 686zz	H×1	
51		Hex.socket set screw M4×10		
52		Hex.socket set screw M4×6(With nylon)		
53		Hex.nut M4		
54		Hex.socket bolt M4×12(With washers)		
55		Hex.socket button bolt M3×6		
56		Hex.socket set screw M4×4(With nylon)		
57		Hex.Socke bolt M2.5×6		
58		Hex.socket bolt M4×15(With washers)		
59		Hex.socket bolt M4×6(With washers)		
60		Hex.socket set screw(Dog point) M4×12		

04C Needle bar C

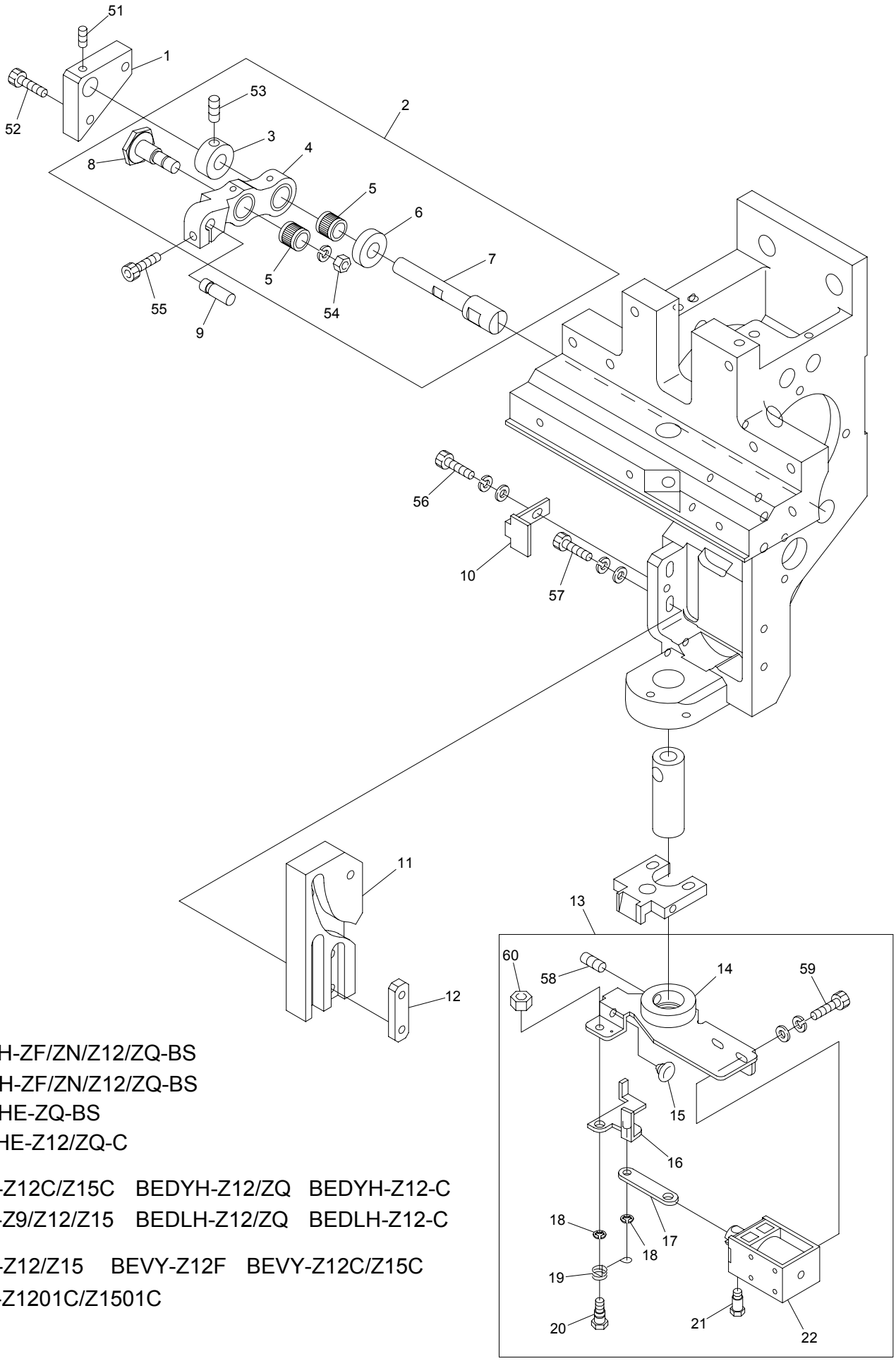

BEDSH-ZF/ZN/Z12/ZQ-BS
BEDRH-ZF/ZN/Z12/ZQ-BS
BEDSHE-ZQ-BS
BEDLHE-Z12/ZQ-C

BEVS-Z12C/Z15C BEDYH-Z12/ZQ BEDYH-Z12-C
BEVS-Z9/Z12/Z15 BEDLH-Z12/ZQ BEDLH-Z12-C

BEVY-Z12/Z15 BEVY-Z12F BEVY-Z12C/Z15C
BEVT-Z1201C/Z1501C

04C Needle bar C

(H=Head Q'TY)

ITEM	LIST No.	DESCRIPTION	Q'TY	NOTE
1	HT230590	Lever pin block	H×1	
2	RR230090	Needle bar driving lever set(P25.65)	H×1	
3	HB230271C	Needle bar driving lever fixing pin set collar	H×1	
4	RR230080	Needle bar driving lever(P25.65)	H×1	
5	HB230361	Needle roller with retainer(KV8×11×10SV2)	H×2	
6	HB230281C	Needle bar driving lever fixing pin collar	H×1	
7	HT230410C	Needle bar driving lever fixing pin	H×1	
8	HB230261	Needle bar driving lever connecting pin	H×1	
9	HB230220C	Needle bar driving lever pin(B)	H×1	
10	SG230270	Cam guide plate	H×1	
11	SG230210	Cloth hold cam(K3)	H×1	
12	MK230080C	Cam tap plate	H×1	
13	SG270190	Thread support a'ssy	H×1	
	MM270000	Thread support a'ssy(24V) DTHE	H×1	DTHE-ZQ-C01
14	SG270050	Thread support base	H×1	
15	A9014166	Plug cushion rubber TM-96-6	H×1	
16	SG270060	Thread support lever	H×1	
17	SG270070	Thread support link	H×1	
18	A9012127	E-ring(φ3)	H×2	
19	SG270120	Thread support return spring	H×1	
20	SG270110	Thread support lever pin screw	H×1	
21	KC270101	Solenoid pin	H×1	
22	A9056037	Keep solenoid TDS-K10SL(With cover)	H×1	
	A9056042	Keep solenoid(24V) TDS-K10SL-368	H×1	DTHE-ZQ-C01
51		Hex.socket set screw M4×4(With nylon)		
52		Hex.socket bolt M4×12(With washers)		
53		Hex.socket set screw M5×5		
54		Hex.nut M6(With spring washer)		
55		Hex.socket bolt M4×14(With adhesive)		
56		Hex.socket bolt M4×8(With washers)		
57		Hex.socket bolt M4×15(With washers)		
58		Hex.socket set screw M5×8		
59		Hex.socket bolt M3×6(With washers)		
60		Hex.nut M4		

04D Needle bar D

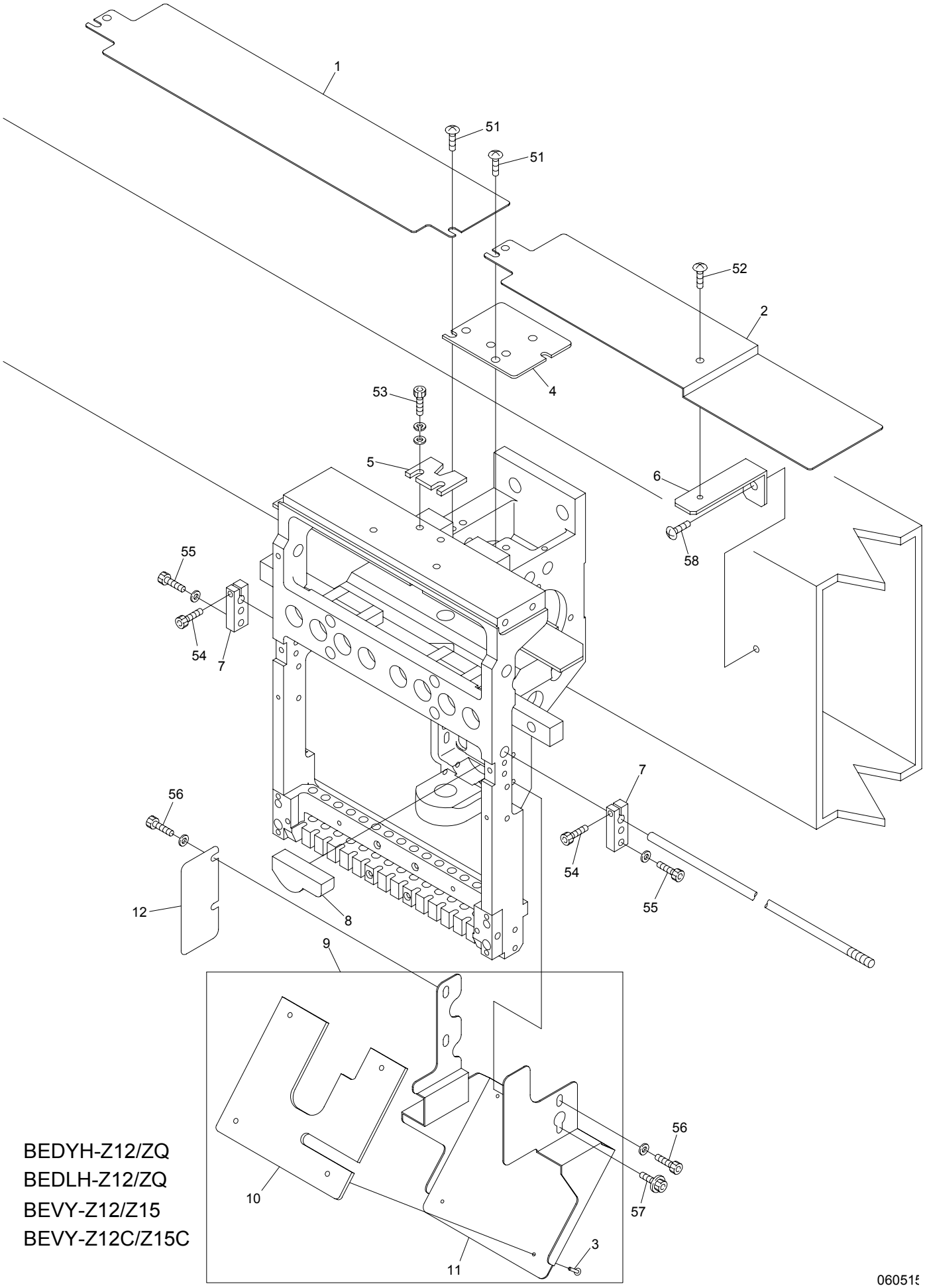

BEDYH-Z12/ZQ
BEDLH-Z12/ZQ
BEVY-Z12/Z15
BEVY-Z12C/Z15C

060515

04D Needle bar D

(H=Head Q'TY)

ITEM	LIST No.	DESCRIPTION	Q'TY	NOTE
1	SL250110	Upper shaft guard(Needle between 380)	H - 2	
	SL250140	Upper shaft guard(Needle between 520)	H - 2	
2	SL250160	Upper shaft guard(DYH,needle between 380)	1	First head left side
	SL250150	Upper shaft guard(DYH,needle between 520)	1	First head left side
3	A9014168	Brass rivet φ2×11.5(Brass)	H × 4	
4	RV250070	Arm upper cover	H × 1	
5	SG230160	Slide block fixed plate	H × 1	Machine shipment remove
6	SG250120	Upper shaft guard support(DYH)	1	
7	SG230290	Slide block holder	H × 2	
8	SG230280	Oil save felt	H × 1	
9	SL250081	Cap cover set 2	H × 1	
10	SG250060	Oil holder felt	H × 1	
11	SL250091	Cap cover 2	H × 1	
12	SL250230	Head left cover	1	
51		Truss screw M5×6		
52		Truss screw M4×6		
53		Hex.socket bolt M5×10		
54		Hex.socket bolt M4×14		
55		Hex.socket bolt M4×15(With plain washer)		
56		Hex.socket bolt M4×6(With plain washer)		
57		Hex.socket bolt M4×25(With washers)		
58		Truss screw M5×8		

04E Needle bar E

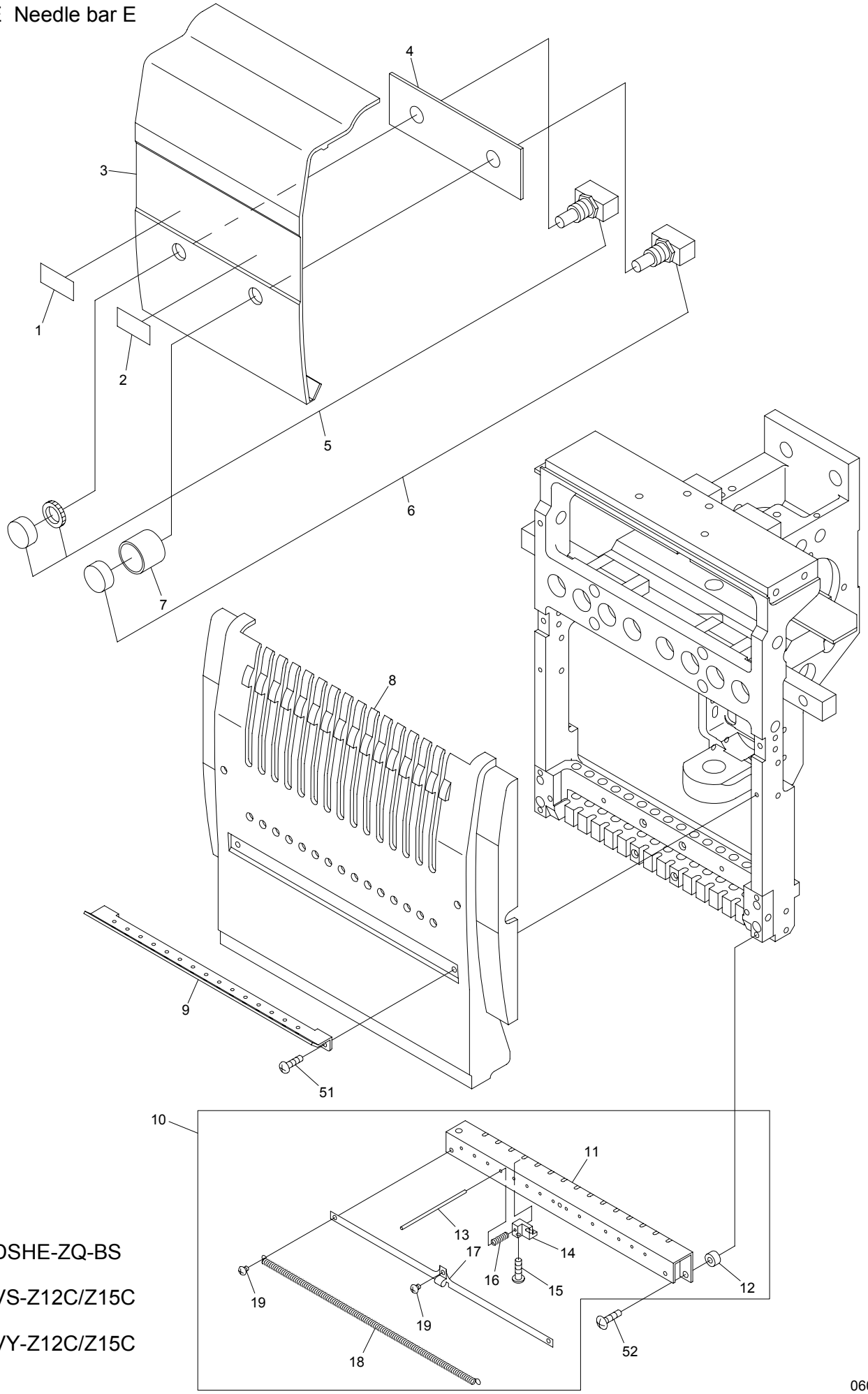

BEDSHE-ZQ-BS

BEVS-Z12C/Z15C

BEVY-Z12C/Z15C

060622

04E Needle bar E

(H=Head Q'TY)

ITEM	LIST No.	DESCRIPTION	Q'TY	NOTE
1	SF250150	Name plate(Stop)	2	
2	SF250140	Name plate(Start)	2	
3	PF250010P380	Head between cover(Z12,P=380)	2	
	PF250020P380	Head between cover(Z12,P=380) with hole	2	
	PF250010P520	Head between cover(Z12,P=520)	1	
	PF250020P520	Head between cover(Z12,P=520) with hole	2	
	PG250010P380	Head between cover(Z15,P=380)	2	
	PG250020P380	Head between cover(Z15,P=380) with hole	2	
	PG250010P520	Head between cover(Z15,P=520)	2	
	PG250020P520	Head between cover(Z15,P=520) with hole	2	
4	SM250160	Support plate	2	
5	A9052081	Push button switch(SB-221 N/O,AT-412R)	2	
6	A9052080	Push button switch(SB-221 N/O,AT-412M)	2	
7	KX510140	Switch cover	2	
8	PF250000	Head cover(Z12)	H×1	Z12
	PG250000	Head cover(Z15)	H×1	Z15
9	SG240000	Thread guard(With ceramic)	H×1	Z12
	RD240271	Thread guard(With ceramic)	H×1	Z15
10	SG270170	Thread support apron a'ssy	H×1	Z12
	SL270000	Thread support apron a'ssy	H×1	Z15
11	SG270010	Thread support apron	H×1	Z12
	SL270010	Thread support apron	H×1	Z15
12	SG270140	Thread support apron spacer	H×2	
13	SG270130	Thread support pin	H×12	Z12
			H×15	Z15
14	SG270000	Thread support clamp	H×12	Z12
			H×15	Z15
15	HT270063	Thread support clamp set screw	H×12	Z12
			H×15	Z15
16	SG270180	Thread support spring	H×12	Z12
			H×15	Z15
17	SG270150	Thread holder spring support	H×1	Z12
	SL270030	Thread holder spring support	H×1	Z15
18	SG270160	Thread holder spring	H×1	Z12
	SL270020	Thread holder spring	H×1	Z15
19	SL270040	Thread holder spring fixed screw	H×3	
51		Pan screw M3×8		
52		Truss screw M4×12		

05 Jump

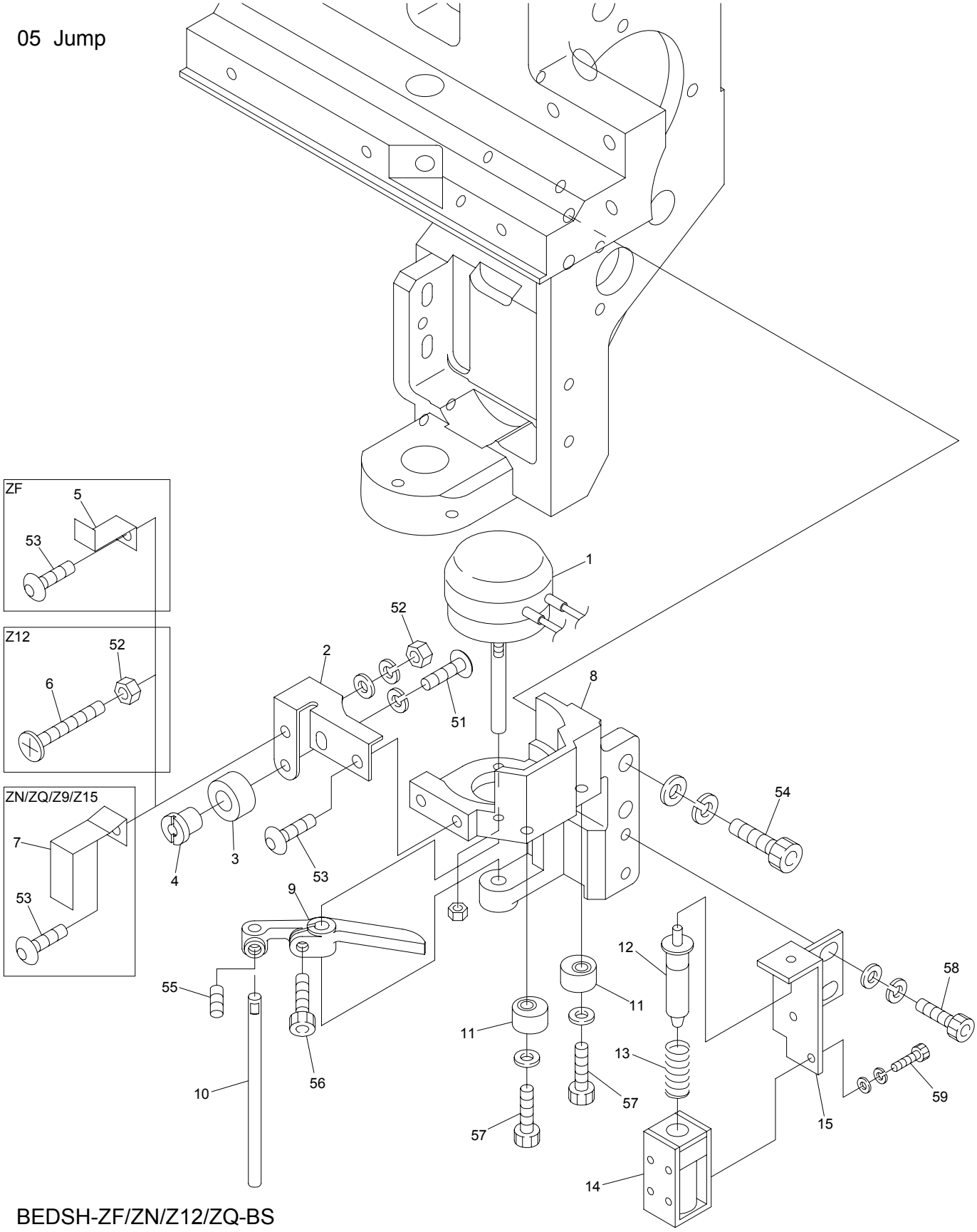

BEDSH-ZF/ZN/Z12/ZQ-BS
BEDRH-ZF/ZN/Z12/ZQ-BS

BEDSHE-ZQ-BS BEVS-Z9/Z12/Z15 BEVS-Z12C/Z15C BEDYH-Z12/ZQ
BEDLH-Z12/ZQ

BEDYH-Z12-C BEVY-Z12/Z15 BEVY-Z12F BEVY-Z12C/Z15C BEDLHE-Z12/ZQ-C
BEDLH-Z12-C

05 Jump

(H=Head Q'TY)

ITEM	LIST No.	DESCRIPTION	Q'TY	NOTE
1	A9056036	Rotary solenoid 3ER35-35×3×8×9 M990386R(ETL)	H × 1	
2	SG230260	Needle bar stopper fixing bracket	H × 1	
3	HT230220	Needle bar stopper	H × 1	
4	HT230620C	Needle bar stopper fixing pin	H × 1	
5	MN230090	Indication plate	H × 1	Z5
6	SG230310	Needle bar indication bolt	H × 1	Z12
7	MH230161	Indication plate	H × 1	Z9/Z15
8	RD230250	Jump solenoid fixing bracket	H × 1	
9	HB240020C	Jump solenoid lever	H × 1	
10	HB240030C	Jump solenoid lever pin	H × 1	
11	HB240041	Jump eccentric	H × 2	
12	HB560080	Solenoid plunger a'ssy	H × 1	
13	HB560060	Keep solenoid spring	H × 1	
14	HB560211	Keep solenoid TDS-K07A(ETL)	H × 1	
15	RV230050	Keep solenoid fixed plate	H × 1	
51		Hex.socket button bolt M4×8		
52		Hex.nut M4		
53		Hex.socket button bolt M4×6		
54		Hex.socket bolt M5×16(With washers)		
55		Hex.socket set screw M4×4(With adhesion)		
56		Hex.socket bolt M4×8		
57		Hex.socket bolt M4×12(With plain washer) (With adhesion)		
58		Hex.socket bolt M4×8(With washers)		
59		Hex.socket bolt M2.6×5(With washers)		

06-1 Thread guide(Z12)

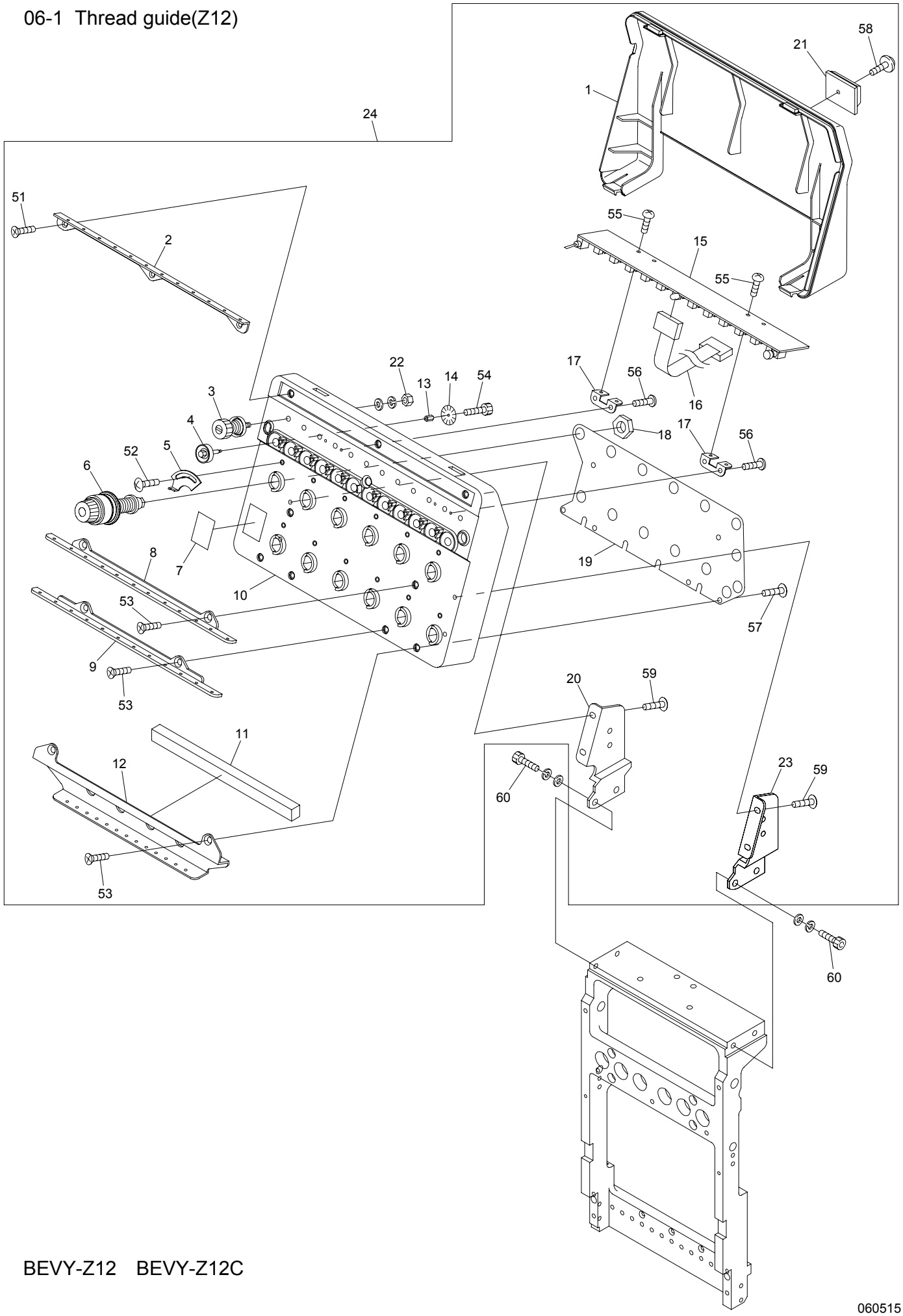

BEVY-Z12 BEVY-Z12C

060515

06-1 Thread guide(Z12)

(H=Head Q'TY)

ITEM	LIST No.	DESCRIPTION	Q'TY	NOTE
1	PN240010	Tension base cover(VY-Z12)	H×1	
2	SG240040	Upper part thread guide plate(DSH-Z12)	H×1	
3	RR240300C	Tension a'ssy(DS)	H×12	
4	HT240290	Tension wheel a'ssy	H×12	
5	RR240510	Thread spring adjusting plate	H×12	
6	RD240154	Dial tension a'ssy	H×12	
7	RR240390	Number label	H×1	
8	SG240050	Thread guide plate upper(DSH-Z12)	H×1	
9	SG240060	Thread guide plate lower(DSH-Z12)	H×1	
10	PF240010	Tension base case a'ssy(VS-Z12)	H×1	
11	SG240110	Sponge rubber(DSH-Z12)	H×1	
12	SG240070	Second thread guide plate lower(DSH-Z12)	H×1	
13	KN540510	Tension wheel nut	H×12	
14	HT240101	Lower thread detection sensor disk(YN)	H×12	
15	EBY02600	8580· switch board with thread detection	H×1	
16	EBY01627	H2074 16 needle flat cable(Z12)	H×1	
17	RR240330	Switch board fixed base(DS)	H×2	
18	HT240180	SM-nut	H×12	
19	SG240080	Tension earth plate(DSH-Z12)	H×1	
20	SG240100	Tension base bracket· L(DSH-Z12)	H×1	
21	A9068032	FCW clamp(FCW-26)	H×1	
22	FA999052	Hex.nut SM11/64(With washers)	H×12	
23	SG240090	Tension base bracket· R(DSH-Z12)	H×1	
24	PN240000	Tension base a'ssy(VY-Z12)	H×1	
51		Flush screw M3×8		
52		Truss screw M3×5		
53		Flush screw M4×8		
54		Hex.socket bolt M2×3		
55		Pan screw M3×4		
56		Pan head tapping screw B tight M3×8		
57		Pan screw M4×6		
58		Pan head tapping screw B tight M3×5		
59		Truss screw M4×10		
60		Hex.socket bolt M5×15(With washers)		

06-2 Thread guide(Z15)

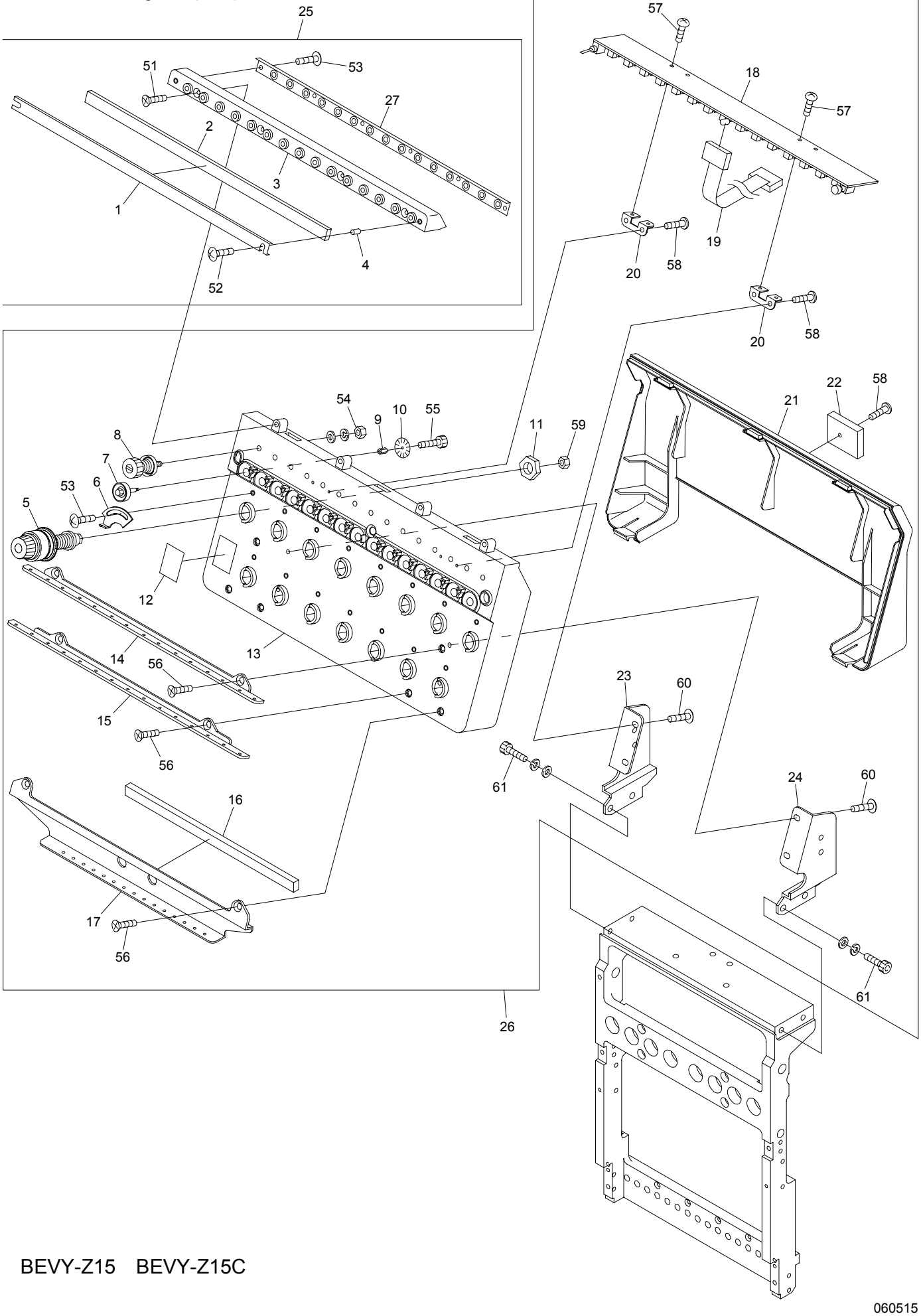

BEVY-Z15 BEVY-Z15C

060515

06-2 Thread guide(Z15)

(H=Head Q'TY)

ITEM	LIST No.	DESCRIPTION	Q'TY	NOTE
1	RV240100	Felt frame(DSH-ZQ)	H×1	
2	RV240110	Felt(DSH-ZQ)	H×1	
3	PG240040	Thread collar base(VS-Z15)	H×1	
4	A9012438	Felt hold spacer(DSH-ZQ)	H×2	
5	RD240154	Dial tension a'ssy(DS)	H×15	
6	RR240510	Thread spring adjusting plate	H×15	
7	HT240290	Tension wheel a'ssy	H×15	
8	RR240300	Tension a'ssy(DS)	H×15	
9	KN540510	Tension wheel nut	H×15	
10	HT240101	Lower thread detection sensor disk(YN)	H×15	
11	HT240180	SM-nut	H×15	
12	RR240390	Number label	H×1	
13	PG240010	Tension base case a'ssy(VS-Z15)	H×1	
14	RV240040	Thread guide plate upper(DSH-ZQ)	H×1	
15	RV240050	Thread guide plate lower(DSH-ZQ)	H×1	
16	RV240091	Sponge rubber(DSH-ZQ)	H×1	
17	RV240062	Second thread guide plate(DSH-ZQ)	H×1	
18	EBY02610	8560· switch board with thread detection	H×1	
19	EBY01625	H1842 16 needle flat cable	H×1	
20	RR240330	Switch board fixed base	H×2	
21	PG240020	Tension base cover(VS-Z15)	H×1-1	Except for 1st head
	PP240010	Tension base cover(VY-Z15 1st head)	1	1st head
22	A9068032	FCW clamp(FCW-26)	H×1	
23	RV240081	Tension base bracket· L(DSH-ZQ)	H×1	
24	RV240071	Tension base bracket· R(DSH-ZQ)	H×1	
25	PG240030	Thread collar base a'ssy(VS-Z15)	H×1	
26	PG240000	Tension base a'ssy(VS-Z15)	H×1-1	Except for 1st head
	PP240000	Tension base a'ssy(VY-Z15) 1st head	1	1st head
27	RV240180	Tube holder(D-ZQ)	H×1	
51		Flush screw M3×8		
52		Truss screw M3×14		
53		Truss screw M3×5		
54		Hex.nut SM11/64(With washers)		
55		Hex.socket bolt M2×3		
56		Flush screw M4×8		
57		Pan screw M3×4		
58		Pan head tapping screw B tight M3×8		
59		Hex.nut M4 I		
60		Truss screw M4×10		
61		Hex.socket bolt M5×15(With washers)		

07 Color change

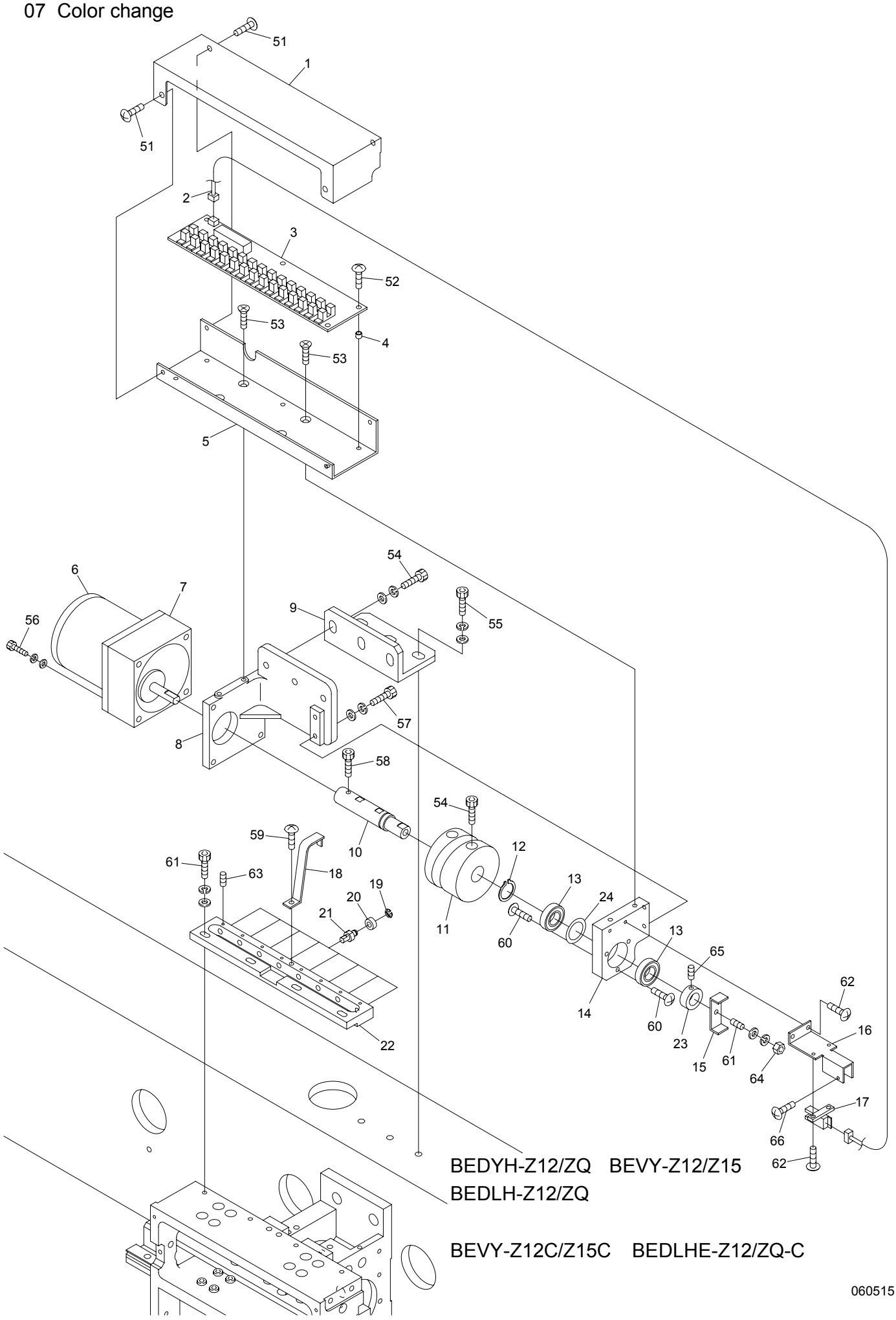

060515

07 Color Change

ITEM	LIST No.	DESCRIPTION	Q'TY	NOTE
1	SC330110	Color change cover	1	
2	A9053079	Lock sensor cable Z type	1	
3	EBY01650	Color change board	1	
4	A9012208	Spacer(Roll bush) φ5×4L	5	
5	SC330100	Color change board base plate	1	
6	A9065092	Reversible motor 3RJ10GB-AUL-E4	1	
7	A9065093	Gear head 3GB18K	1	
8	SC330080C	Color change base	1	
9	SJ330021	Color change bracket(DYHE)	1	
10	SC330041	Color change cam connecting shaft	1	
11	SC330010	Color change cam(Compact)	1	
12	A9012068	C-ring(For shaft φ15)	1	
13	A9010113	Bearing 6901ZZ	2	
14	SC330091C	Color change bearing	1	
15	SC330052	Revolution sensor plate	1	
16	SC330061	sensor stay	1	
17	A9060063	Photo micro sensor EE-SX672A(OMRON)	1	
18	SC330120	Color change sense plate	1	
19	A9012127	E-ring φ3	7	Z12
			8	Z15
20	A9010063	Bearing MR105ZZ(NSK)	7	Z12
			8	Z15
21	SC330030	Connecting collar shaft	7	Z12
			8	Z15
22	SJ330041	Connecting block(Z12)	1	Z12
	SC330021	Connecting block(ZQ)	1	Z15
23	SJ330050	Color change set collar	1	
24	SJ330060	Shim ring(For color change)	1	
51		Truss screw M4×8(Chromate)		
52		Truss screw M4×8		
53		Flush screw M4×8		
54		Hex.socket bolt M6×15(Black)		
55		Hex.socket bolt M6×18(Black)		
56		Hex.socket bolt M4×60(With washers)		
57		Hex.socket bolt M4×8(Black)		
58		Hex.socket bolt M4×8		
59		Truss screw M4×6		
60		Truss screw M4×5		
61		Hex.socket set screw M6×20		
62		Truss screw M3×8		
63		Hex.socket set screw M3×4(With screw lock)		
64		Hex.nut M6		
65		Hex.socket set screw M4×5		
66		Truss screw M3×12		

08-1 Drive(2T/4T)

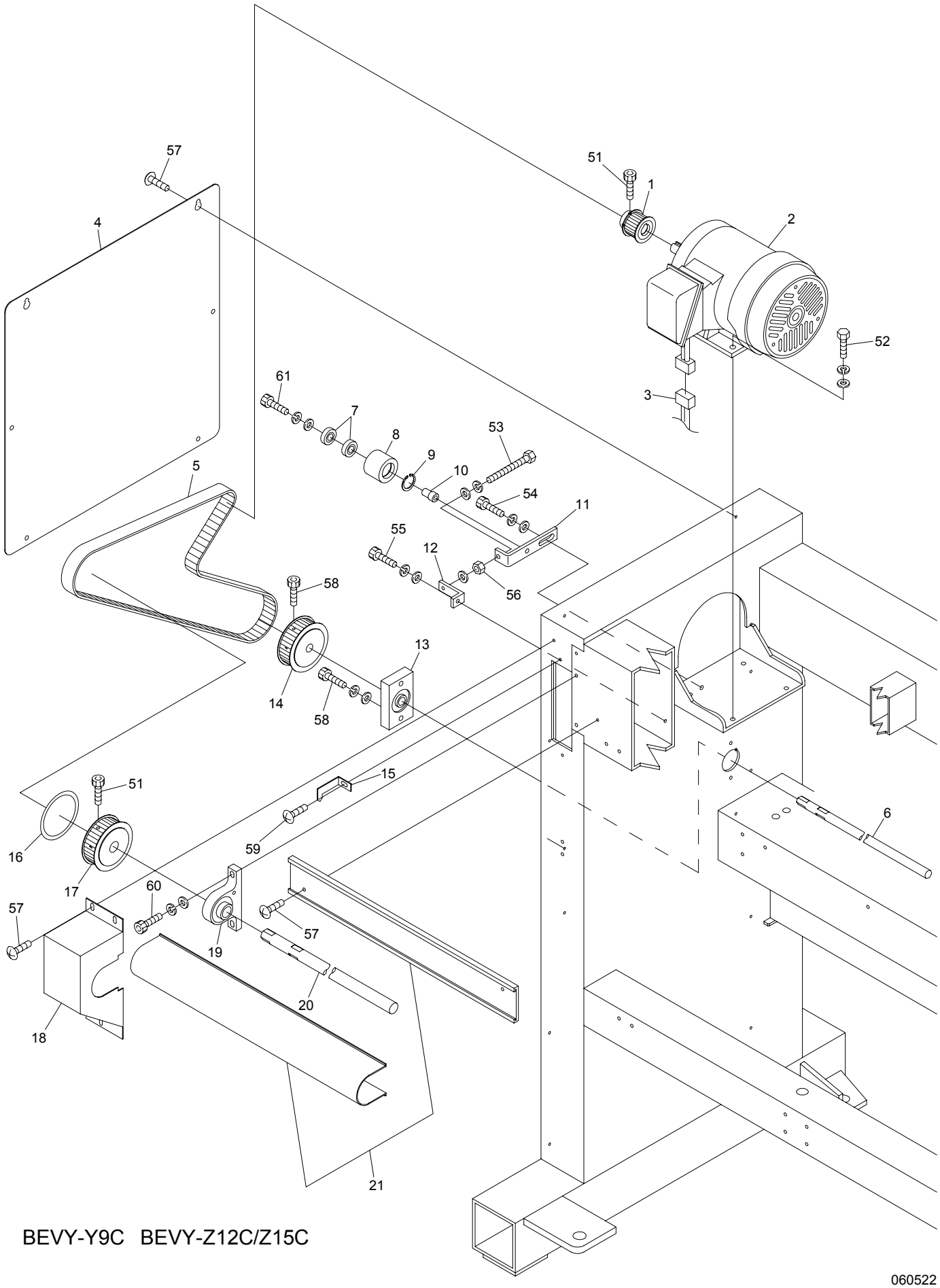

BEVY-Y9C BEVY-Z12C/Z15C

060522

08-1 Drive(2T/4T)

ITEM	LIST No.	DESCRIPTION	Q'TY	NOTE
1	SC481370	Motor pulley(S5M-26,0.2kw)	1	2T
	RP310170	Motor pulley(S5M-26)	1	4T
2	RA310380	Main motor 1K-FCKL8-4P-0.2kw(ETL)	1	2T
	RP310201	Main motor IK-FBKK8-4P-0.55kw VF3(ETL)	1	4T
3	EP530030	Main motor cable(CE) DYHE	1	
	A9053081	Motor cable 1.25×4×5m	1	
4	SJ160030	Frame upper cover	2	
5	A9020180	Timing belt B250S5M1420	1	
6	SC310130	Lower shaft φ15(For 2T)	1	2T
	SC310110	Lower shaft φ15(For 4T)	1	4T
7	A9010003	Bearing 6001ZZ	2	
8	RQ310000	Idler	1	
9	A9012063	C-ring(For hole φ28)	1	
10	SC310021	Idler shaft	1	
11	SC310030	Idler bracket	1	
12	SC310150	Tension bracket	1	
13	SC310062	Lower shaft housing	1	
14	SC310010	φ15 lower shaft timing pulley(S5M-52)	1	
15	SC310050	Angle instructions plate	1	
16	SC310100	Rotary angle label	1	
17	SC310000	φ20 upper shaft timing pulley(S5M-52)	1	
18	SJ250041	Pulley box(DYHE)	1	
19	SC310071	Upper shaft housing	1	
20	SC310140	Upper shaft φ20(For 2T)	1	2T
	SC310120	Upper shaft φ20(For 4T)	1	4T
21	1SPP5205200	Shaft mogol & cover(VY-C,520/520)	1	P=520
	1SPP3803800	Shaft mogol & cover(VY-C,380/380)	1	P=380
51		Hex.socket bolt M6×15(Black)		
52		Hex.bolt M8×20		
53		Hex.bolt M6×60(Full screw)		
54		Hex.socket bolt M8×20(Black)		
55		Hex.socket bolt M6×15(Chromate)		
56		Hex.nut M6		
57		Truss screw M5×10		
58		Hex.socket bolt M5×8		
59		Truss screw M5×6		
60		Hex.socket bolt M6×18(Black)		
61		Hex.socket bolt M8×35(Black)		

08-2 Drive(6T/8T)

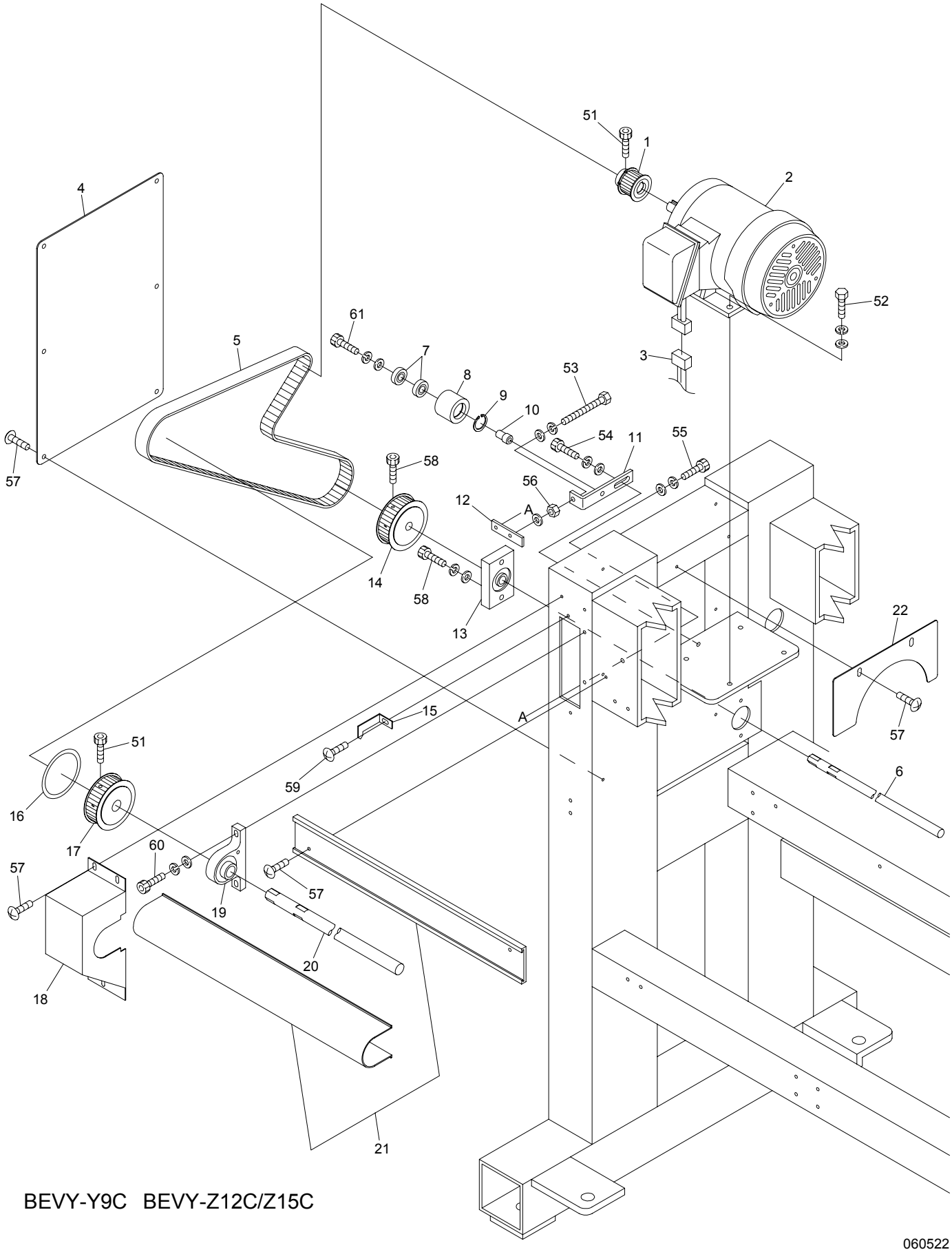

BEVY-Y9C BEVY-Z12C/Z15C

060522

08-2 Drive(6T/8T)

ITEM	LIST No.	DESCRIPTION	Q'TY	NOTE
1	RP310170	Motor pulley(S5M-26)	1	
2	RP310201	Main motor IK-FBKK8-4P-0.55kw VF3(ETL)	1	
3	EP530030	Main motor cable(CE) DYHE	1	
	A9053081	Motor cable 1.25×4×5m	1	
4	SC160041	Stand cover	2	
5	A9020180	Timing belt B250S5M1420	1	
6	SC310080	Lower shaft φ15	1	6T
	SC310160	Lower shaft φ15(C08,P=380)	1	8T
7	A9010003	Bearing 6001ZZ	2	
8	RQ310000	Idler	1	
9	A9012063	C-ring(For hole φ28)	1	
10	SC310021	Idler shaft	1	
11	SC310030	Idler bracket	1	
12	SC310040	Tension plate	1	
13	SC310062	Lower shaft housing	1	
14	SC310010	φ15 lower shaft timing pulley(S5M-52)	1	
15	SC310050	Angle instructions plate	1	
16	SC310100	Rotary angle label	1	
17	SC310000	φ20 upper shaft timing pulley(S5M-52)	1	
18	SJ250041	Pulley box(DYHE)	1	
19	SC310071	Upper shaft housing	1	
20	SC310090	Upper shaft φ20	1	6T
	SC310170	Upper shaft φ20(C08,P=380)	1	8T
21	1SPP5205200	Shaft mogol & cover(VY-C,520/520)	1	P=520
	1SPP3803800	Shaft mogol & cover(VY-C,380/380)	1	P=380
22	SJ250080	Drive motor cover(DYHE)	1	DYHE
51		Hex.socket bolt M6×15(Black)		
52		Hex.bolt M8×20		
53		Hex.bolt M6×60(Full screw)		
54		Hex.socket bolt M8×20(Black)		
55		Hex.socket bolt M6×15(Chromate)		
56		Hex.nut M6		
57		Truss screw M5×10		
58		Hex.socket bolt M5×8		
59		Truss screw M5×6		
60		Hex.socket bolt M6×18(Black)		
61		Hex.socket bolt M8×35(Black)		

10A Pantograph drive A

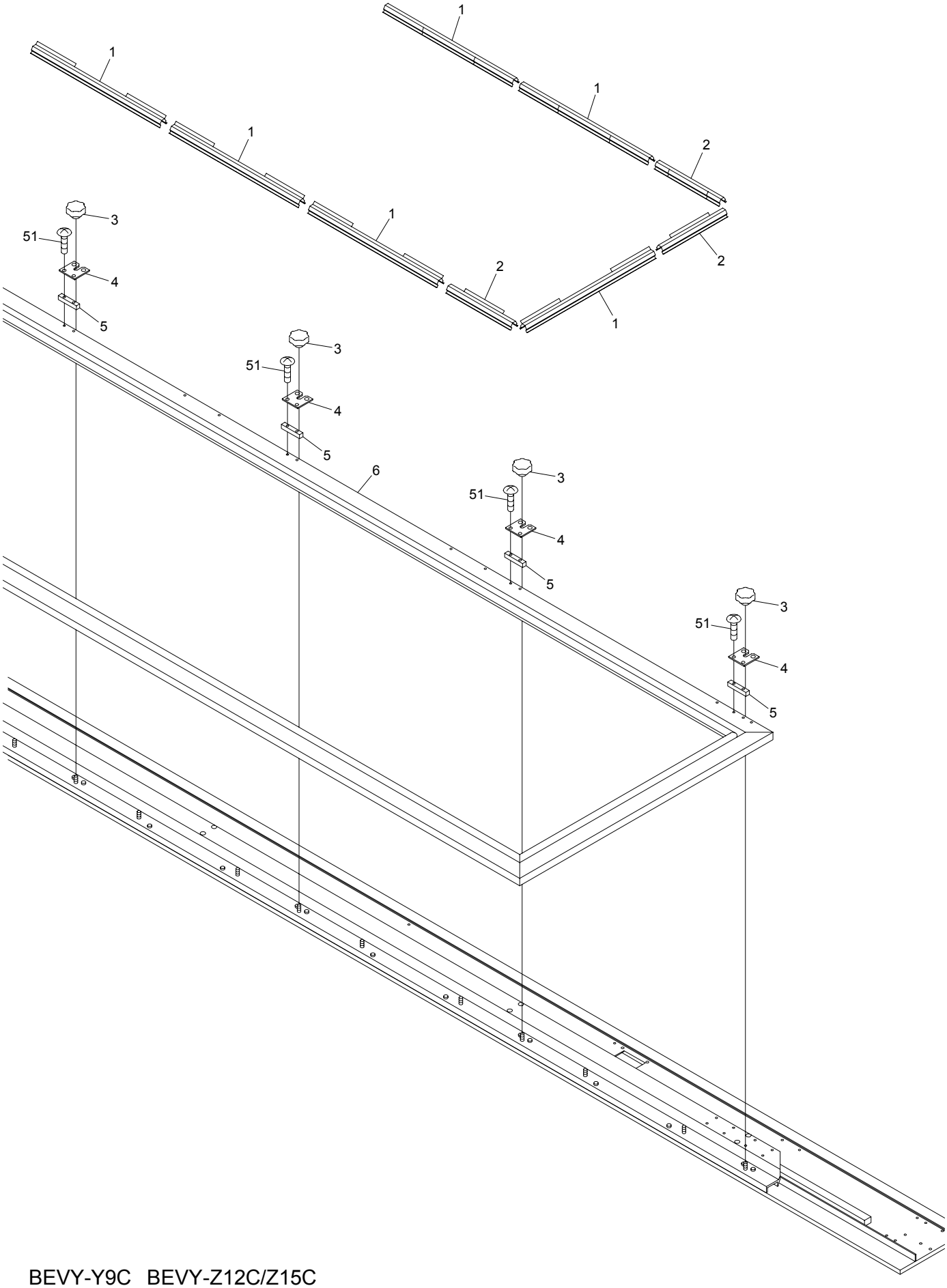

BEVY-Y9C BEVY-Z12C/Z15C

10A Pantograph drive A

(H=Head Q'TY)(※ Depends on machine type)

ITEM	LIST No.	DESCRIPTION	Q'TY	NOTE
1	KF730750	Clip(300L)	8	2T
			16	4T
			22	6T/8T
2	KF730760	Clip(150L)	2	4T/8T
			4	6T/2T
3	A9012437	Knob nut(φ32 M6 tap hole)	H + 1	
4	SC730041	Pantograph fixing plate	H + 1	
5	SC730030	Pantograph fixed spacer B	H + 1	
6	SC730380	Pantograph a'ssy(C02,520P)	1	2T
	SC730340	Pantograph a'ssy(C04,520P)	1	4T
	SC730360	Pantograph a'ssy(C06,520P)	1	6T
	SC730370	Pantograph a'ssy(C08,380P)	1	8T
51		Truss screw M4×20		

10B Pantograph drive B

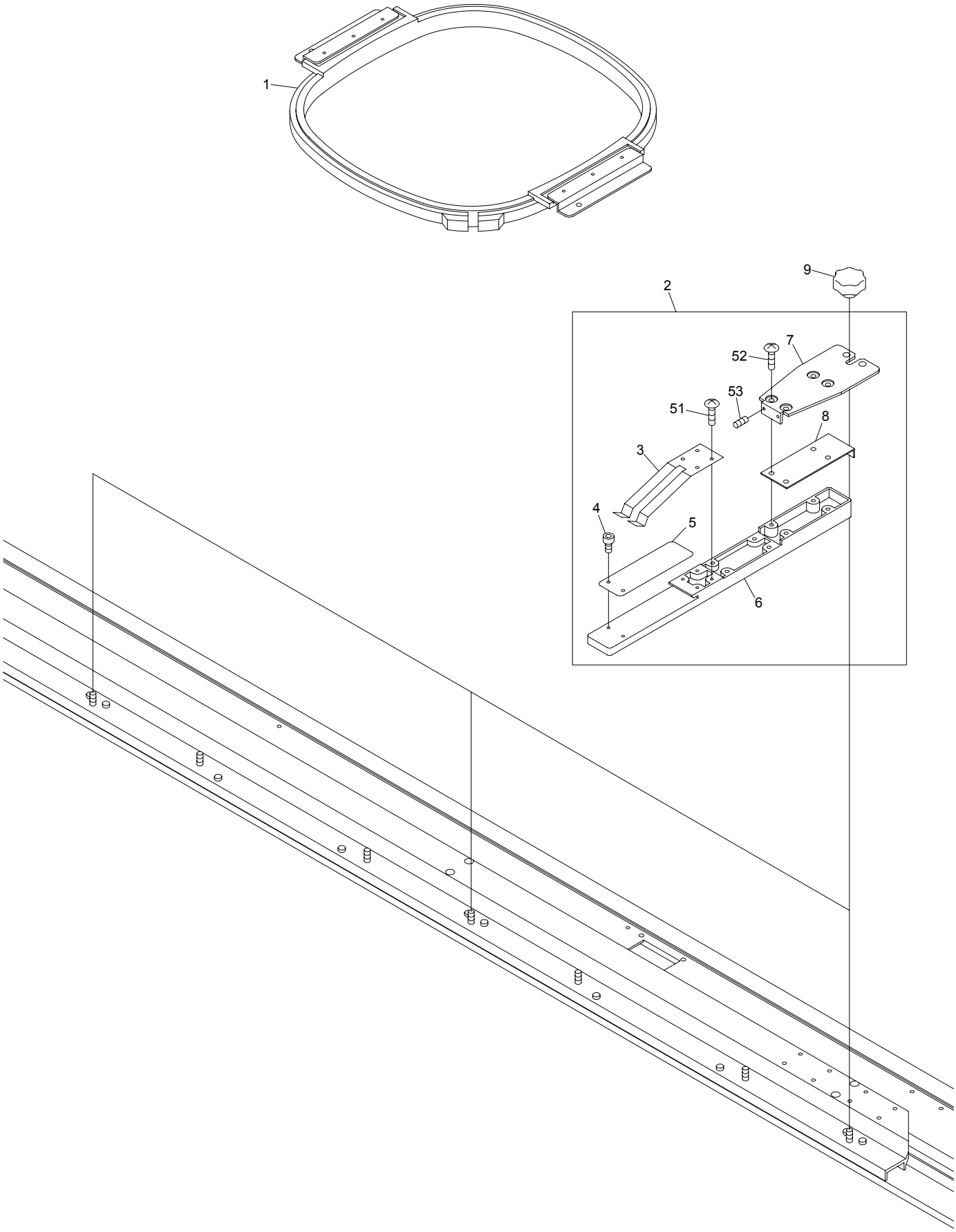

BEVY-Y9C BEVY-Z12C/Z15C

060522

10B Pantograph drive B

(H=Head Q'TY)

ITEM	LIST No.	DESCRIPTION	Q'TY	NOTE
1	FR92460434A520S	Square pantograph a'ssy(460×434)	H× 1	2T/4T/6T
	FR92300290A380A	Square pantograph a'ssy(300×290)	H× 1	8T
2	SC730092	Product pantograph stay a'ssy for compact mashine	H + 1	
3	LA730650	Product pantograph hold spring	H + 1	
4	LA730610	Positioning pin	H×2+2	
5	LA730630	Slide plate	H + 1	
6	LA730590	Pantograph stay main body	H + 1	
7	SC730102	Stay bracket for compact mashine	H + 1	
8	SC730111	Spacer	H + 1	
9	A9012437	Knob nut(φ32 M6 tap hole)	H + 1	
51		Truss screw M3×10		
52		Truss screw M4×10		
53		Hex.socket set screw M3×8(With nylons)		

10C Pantograph drive C

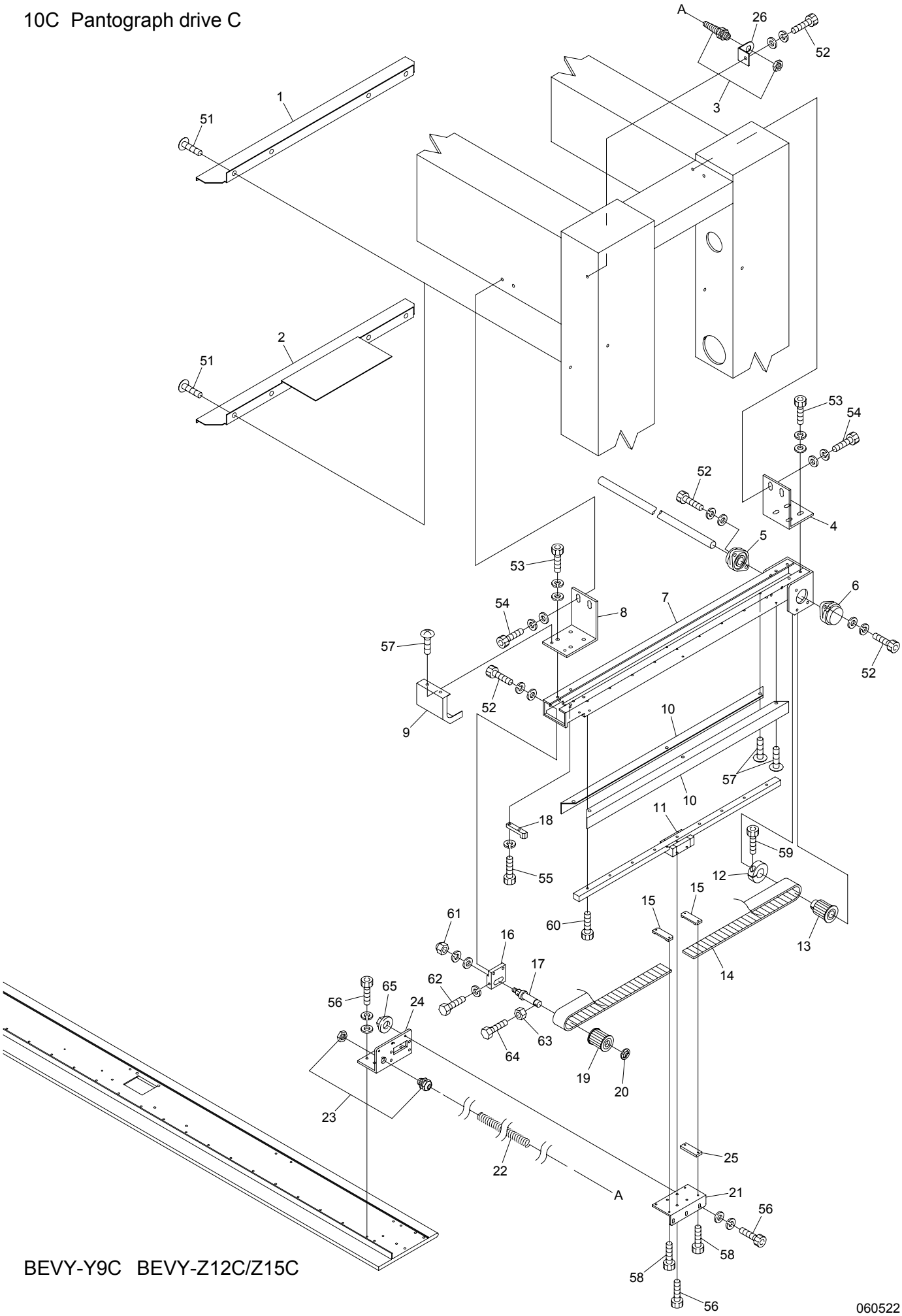

BEVY-Y9C BEVY-Z12C/Z15C

060522

10C Pantograph drive C

ITEM	LIST No.	DESCRIPTION	Q'TY	NOTE
1	SJ250060	V-spline cover(DYHE)	1	2T/4T
2	SJ250090	V-spline cover(DYHE) for 6· 8 heads	1	6T/8T
3	A9068030	Bushing NW-7RP	1	
4	SC480330	H-rail base fixed stay(Rear)	1	
5	A9011243	Bearing unit(UFL002C)	1	
6	A9011244	Bearing unit(UFL002D)	1	
7	SJ480060	H-rail base CE(ST=450) DYHE	1	
	SJ480010	H-rail base(ST=450) DYHE	1	
8	SC480210	H-rail base fixed stay(Front)	1	
9	SC250040	H-rail frout cover	1	
10	SC250070	H-rail side cover	2	
11	SC480040	LM guide(540L)	1	
12	HH481980	φ19 clamp	1	
13	SJ480000	Pantograph drive pulley(16 tooth)	1	
14	SC480020	Timing belt MA5	1	
15	HP482940	Timing belt set rack(5M)	2	
16	SJ480081	Pulley bracket	1	
17	HH481991	Timing pulley shaft	1	
18	RP480201	Pulley stopper	1	
19	SC480010	Pantograph drive pulley(Front)	1	
20	A9012052	E-ring(φ10)	1	
21	SC480120	Guide base(R)	1	
22	A9068049	Curl cord(Compact machine)	1	
23	A9068050	Super seal(NW-7R)	1	
24	SC480080	Guide stay(R)	1	
25	SJ480020	Rack spacer	1	
26	SC480290	Erectrical bracket	1	
51		Truss screw M6×10		
52		Hex.socket bolt M6×15(Chromate)		
53		Hex.socket bolt M5×15(Chromate)		
54		Hex.socket bolt M6×20(Chromate)		
55		Hex.socket bolt M4×12(With spring washer)		
56		Hex.socket bolt M4×12(With adhesion)		
57		Truss screw M4×6(Chromate)		
58		Hex.socket bolt M3×15(Black)		
59		Hex.socket bolt M5×20(Black)		
60		Hex.socket bolt M4×10(Black)		
61		Hex.cap nut M8(Chromate)		
62		Hex.bolt M4×30(Chromate)		
63		Hex.nut M4		
64		Hex.bolt M4×40(Chromate)		
65		Flange nut M4		

10D Pantograph drive D

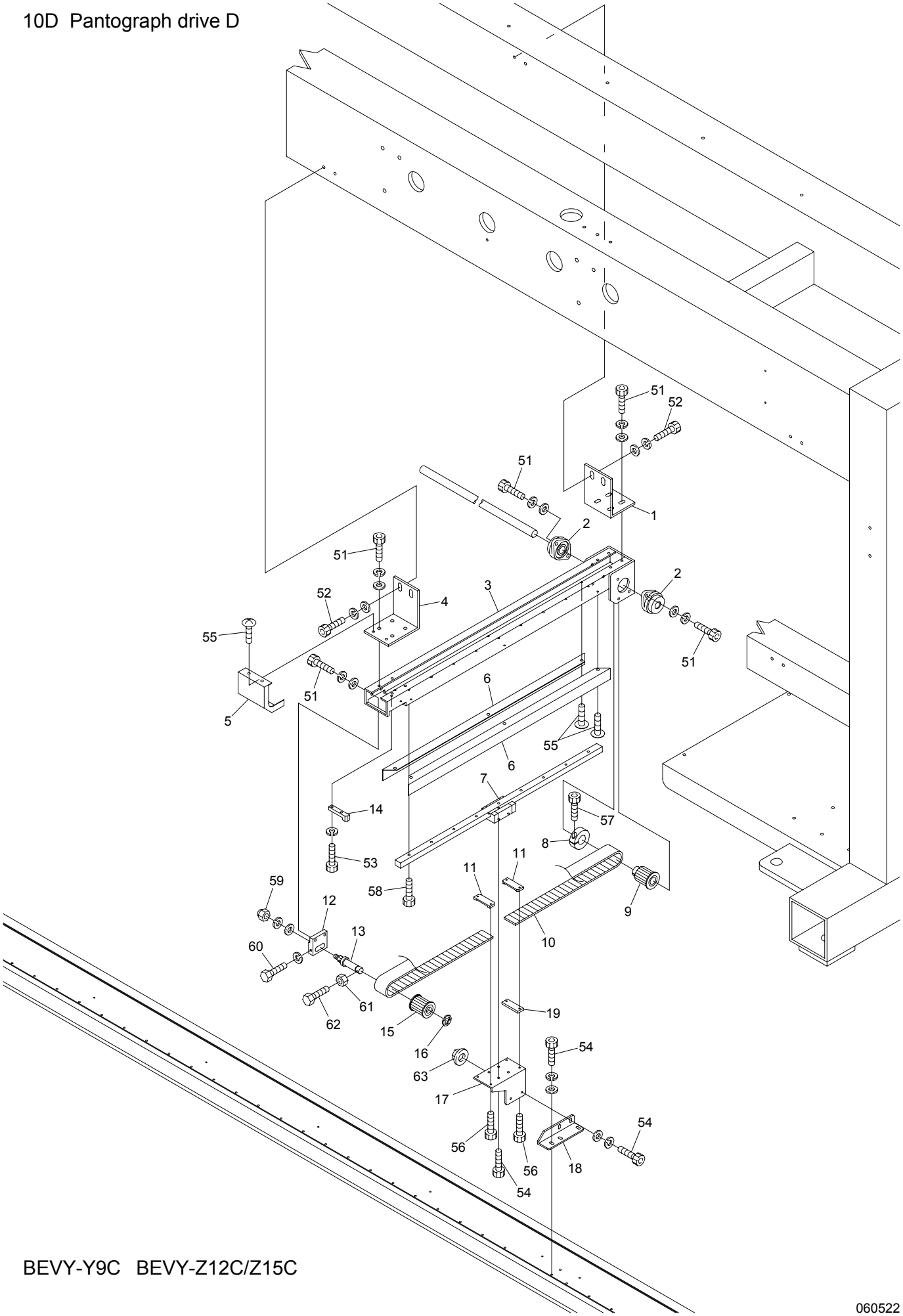

BEVY-Y9C BEVY-Z12C/Z15C

060522

10D Pantograph drive D

ITEM	LIST No.	DESCRIPTION	Q'TY	NOTE
1	SC480330	H-rail base fixed stay(Rear)	1	4T/6T/8T
2	A9011243	Bearing unit(UFL002C)	2	4T/6T
3	SJ480060	H-rail base CE(ST=450) DYHE	1	4T/6T
	SJ480010	H-rail base(ST=450) DYHE	1	4T/6T
4	SC480210	H-rail base fixed stay(Front)	1	4T/6T
5	SC250040	H-rail frout cover	1	4T/6T
6	SC250070	H-rail side cover	2	4T/6T
7	SC480040	LM guide(540L)	1	4T/6T
8	HH481980	φ19 clamp	1	4T/6T
9	SJ480000	Pantograph drive pulley(16 tooth)	1	4T/6T
10	SC480020	Timing belt MA5	1	4T/6T
11	HP482940	Timing belt set rack(5M)	2	4T/6T
12	SJ480081	Pulley bracket	1	4T/6T
13	HH481991	Timing pulley shaft	1	4T/6T
14	RP480201	Pulley stopper	1	4T/6T
15	SC480010	Pantograph drive pulley(Front)	1	4T/6T
16	A9012052	E-ring(φ10)	1	4T/6T
17	SC480140	Guide base(RC)	1	4T/6T
18	SC480100	Guide stay(RC)	1	4T/6T
19	SJ480020	Rack spacer	1	4T/6T
51		Hex.socket bolt M5×15(Chromate)		4T/6T
52		Hex.socket bolt M6×20(Chromate)		4T/6T
53		Hex.socket bolt M4×12(With spring washer)		4T/6T
54		Hex.socket bolt M4×12(With adhesion)		4T/6T
55		Truss screw M4×6(Chromate)		4T/6T
56		Hex.socket bolt M3×15(Black)		4T/6T
57		Hex.socket bolt M5×20(Black)		4T/6T
58		Hex.socket bolt M4×10(Black)		4T/6T
59		Hex.cap nut M8(Chromate)		4T/6T
60		Hex.bolt M4×30(Chromate)		4T/6T
61		Hex.nut M4		4T/6T
62		Hex.bolt M4×40(Chromate)		4T/6T
63		Flange nut M4		4T/6T

10E Pantograph drive E

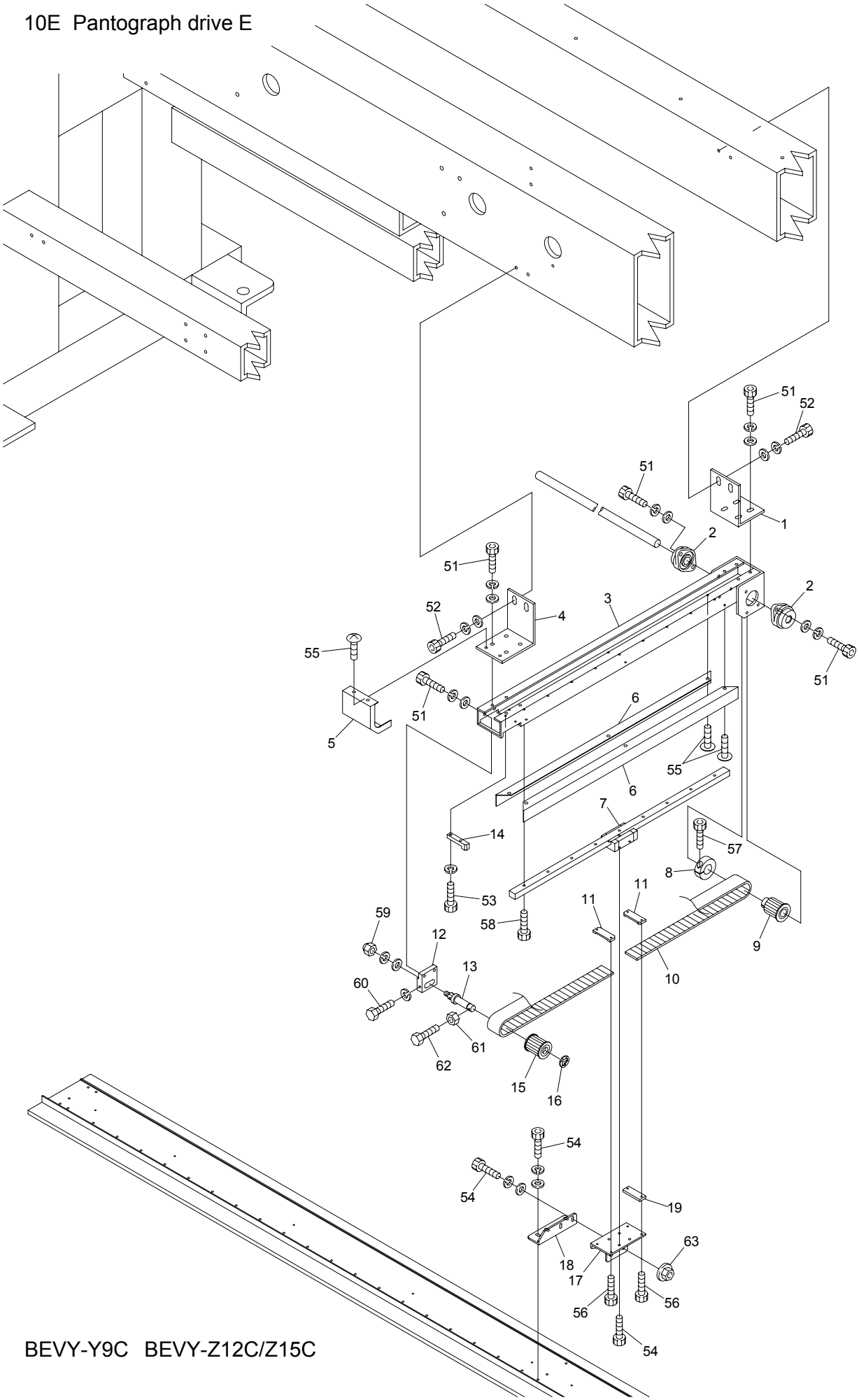

BEVY-Y9C BEVY-Z12C/Z15C

060522

10E Pantograph drive E

ITEM	LIST No.	DESCRIPTION	Q'TY	NOTE
1	SC480330	H-rail base fixed stay(Rear)	1	6T/8T
2	A9011243	Bearing unit(UFL002C)	2	6T
3	SJ480060	H-rail base CE(ST=450) DYHE	1	6T
	SJ480010	H-rail base(ST=450) DYHE	1	6T
4	SC480210	H-rail base fixed stay(Front)	1	6T
5	SC250040	H-rail frout cover	1	6T
6	SC250070	H-rail side cover	2	6T
7	SC480040	LM guide(540L)	1	6T
8	HH481980	φ19 clamp	1	6T
9	SJ480000	Pantograph drive pulley(16 tooth)	1	6T
10	SC480020	Timing belt MA5	1	6T
11	HP482940	Timing belt set rack(5M)	2	6T
12	SJ480081	Pulley bracket	1	6T
13	HH481991	Timing pulley shaft	1	6T
14	RP480201	Pulley stopper	1	6T
15	SC480010	Pantograph drive pulley(Front)	1	6T
16	A9012052	E-ring(φ10)	1	6T
17	SC480150	Guide base(LC)	1	6T
18	SC480110	Guide stay(LC)	1	6T
19	SJ480020	Rack spacer	1	6T
51		Hex.socket bolt M5×15(Chromate)		6T
52		Hex.socket bolt M6×20(Chromate)		6T
53		Hex.socket bolt M4×12(With spring washer)		6T
54		Hex.socket bolt M4×12(With adhesion)		6T
55		Truss screw M4×6(Chromate)		6T
56		Hex.socket bolt M3×15(Black)		6T
57		Hex.socket bolt M5×20(Black)		6T
58		Hex.socket bolt M4×10(Black)		6T
59		Hex.cap nut M8(Chromate)		6T
60		Hex.bolt M4×30(Chromate)		6T
61		Hex.nut M4		6T
62		Hex.bolt M4×40(Chromate)		6T
63		Flange nut M4		6T

10F Pantograph drive F

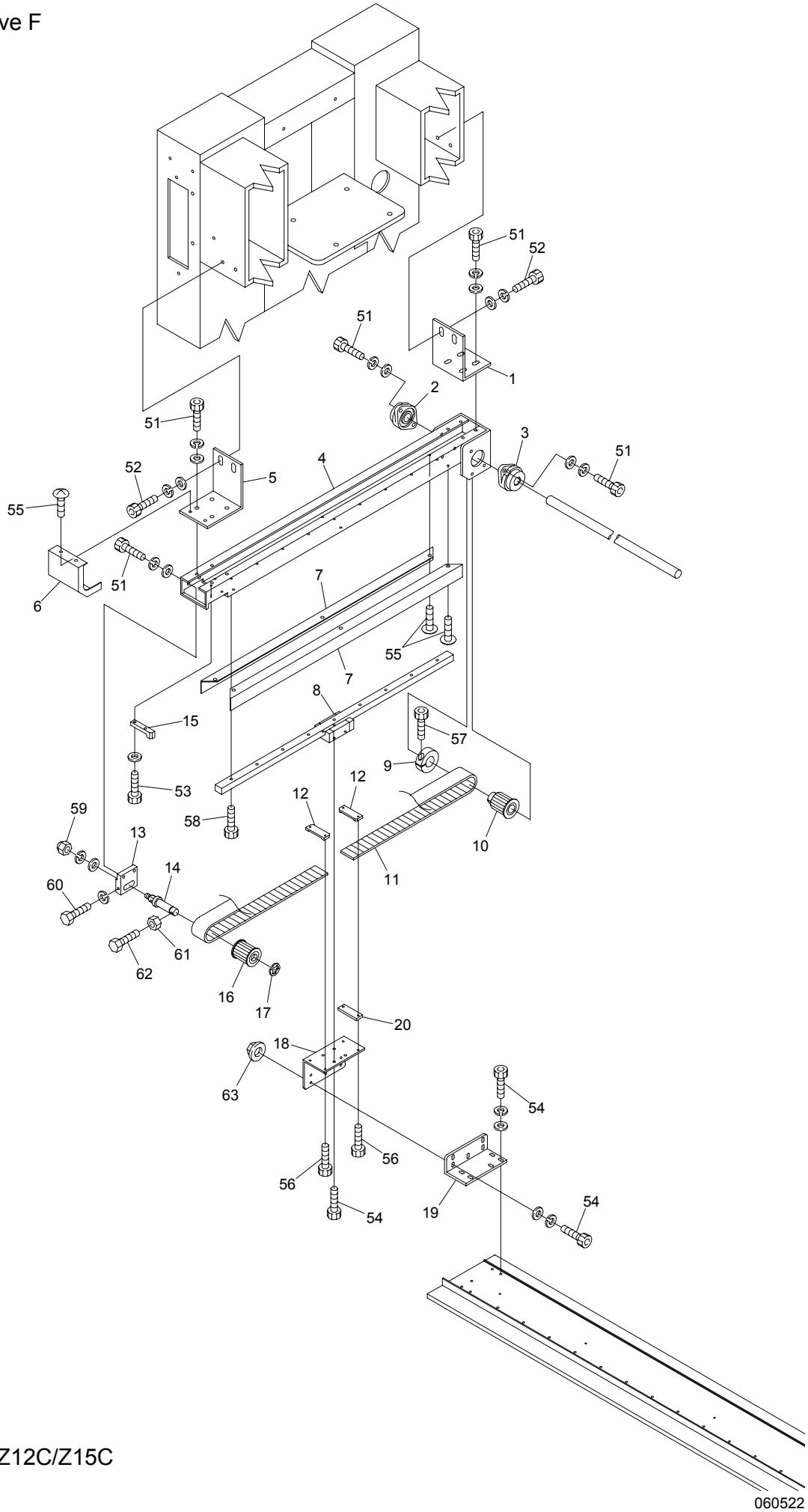

BEVY-Y9C BEVY-Z12C/Z15C

060522

10F Pantograph drive F

ITEM	LIST No.	DESCRIPTION	Q'TY	NOTE
1	SC480330	H-rail base fixed stay(Rear)	1	
2	A9011244	Bearing unit(UFL002D)	1	
3	A9011243	Bearing unit(UFL002C)	1	
4	SJ480060	H-rail base CE(ST=450) DYHE	1	
	SJ480010	H-rail base(ST=450) DYHE	1	
5	SC480210	H-rail base fixed stay(Front)	1	
6	SC250040	H-rail frout cover	1	
7	SC250070	H-rail side cover	2	
8	SC480040	LM guide(540L)	1	
9	HH481980	φ19 clamp	1	
10	SJ480000	Pantograph drive pulley(16 tooth)	1	
11	SC480020	Timing belt MA5	1	
12	HP482940	Timing belt set rack(5M)	2	
13	SJ480081	Pulley bracket	1	
14	HH481991	Timing pulley shaft	1	
15	RP480201	Pulley stopper	1	
16	SC480010	Pantograph drive pulley(Front)	1	
17	A9012052	E-ring(φ10)	1	
18	SC480130	Guide base(L)	1	
19	SC480090	Guide stay(L)	1	
20	SJ480020	Rack spacer	1	
51		Hex.socket bolt M5×15(Chromate)		
52		Hex.socket bolt M6×20(Chromate)		
53		Hex.socket bolt M4×12(With spring washer)		
54		Hex.socket bolt M4×12(With adhesion)		
55		Truss screw M4×6(Chromate)		
56		Hex.socket bolt M3×15(Black)		
57		Hex.socket bolt M5×20(Black)		
58		Hex.socket bolt M4×10(Black)		
59		Hex.cap nut M8(Chromate)		
60		Hex.bolt M4×30(Chromate)		
61		Hex.nut M4		
62		Hex.bolt M4×40(Chromate)		
63		Flange nut M4		

10G Pantograph drive G

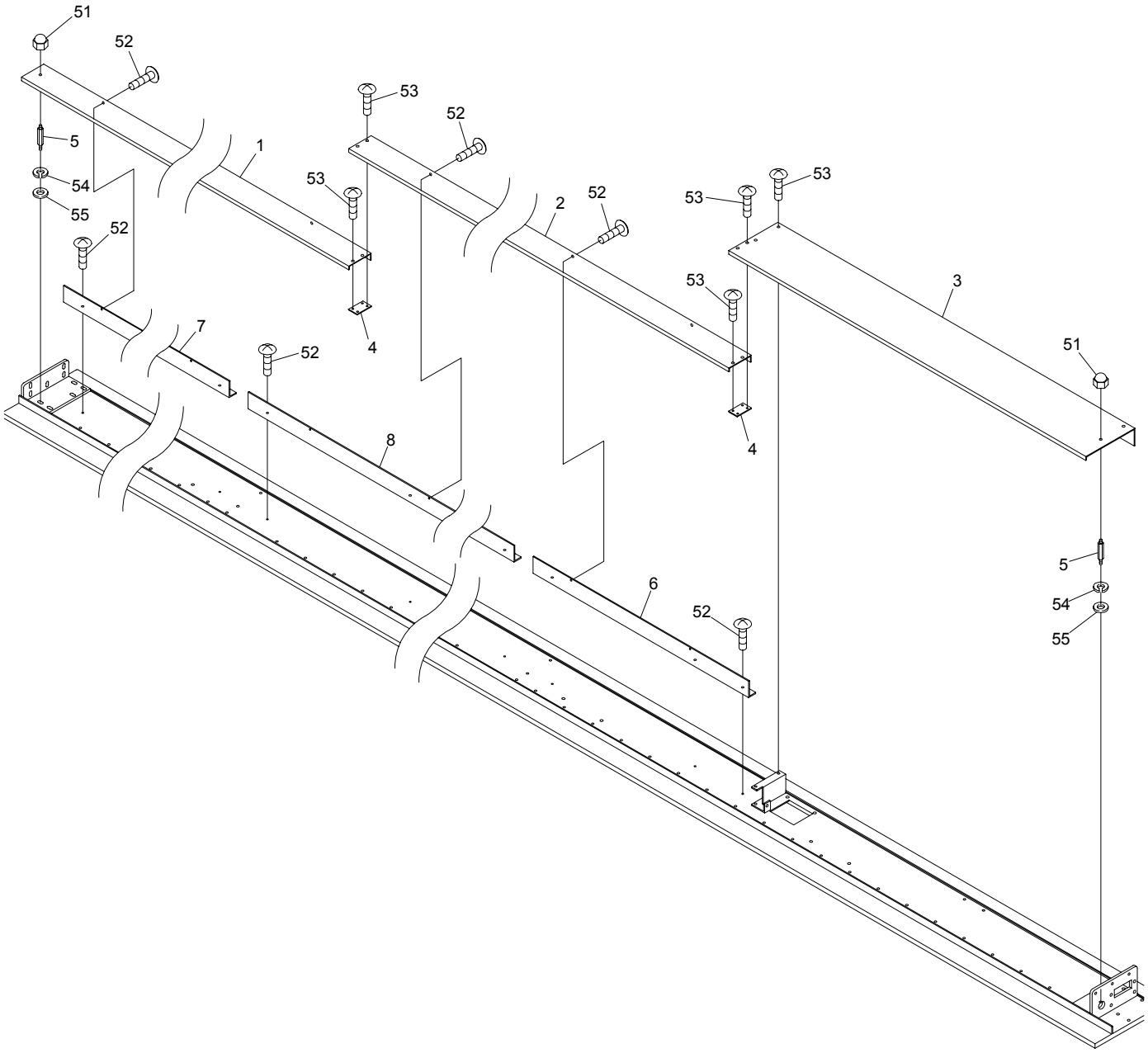

BEVY-Y9C BEVY-Z12C/Z15C

060522

10G Pantograph drive G

ITEM	LIST No.	DESCRIPTION	Q'TY	NOTE
1	SC481310	V-guide cover L(For 2T)	1	2T
	SC481230	V-guide cover L(For 4T)	1	4T
	SC481040	V-guide cover L	1	6T
	SC481490	V-guide cover L(C08,P=380)	1	8T
2	SC481050	V-guide cover R	1	6T/8T
3	SC481061	V-guide drive cover(ST=520)	1	P=520
	SC481451	V-guide drive cover(ST=380)	1	P=380
4	SC481080	V-guide cover fixed plate	1	2T/4T
			2	6T/8T
5	SC481120	V-guide cover stad A	3	
6	SC481220	V-guide cover stay R(For 4T)	1	4T
	SC481090	V-guide cover stay R	1	6T
	SC481460	V-guide cover stay R(C08,P=380)	1	8T
7	SC481300	V-guide cover stay L(For 2T)	1	2T
	SC481210	V-guide cover stay L(For 4T)	1	4T
	SC481110	V-guide cover stay L	1	6T
	SC481480	V-guide cover stay L(C08,P=380)	1	8T
8	SC481100	V-guide cover stay C	1	6T
	SC481470	V-guide cover stay C(C08,P=380)	1	8T
51		Hex.cap nut M4		
52		Truss screw M3×6(Chromate)		
53		Truss screw M4×6(Chromate)		
54		Plain washer M4		
55		Spring washer M4		

10H Pantograph drive H

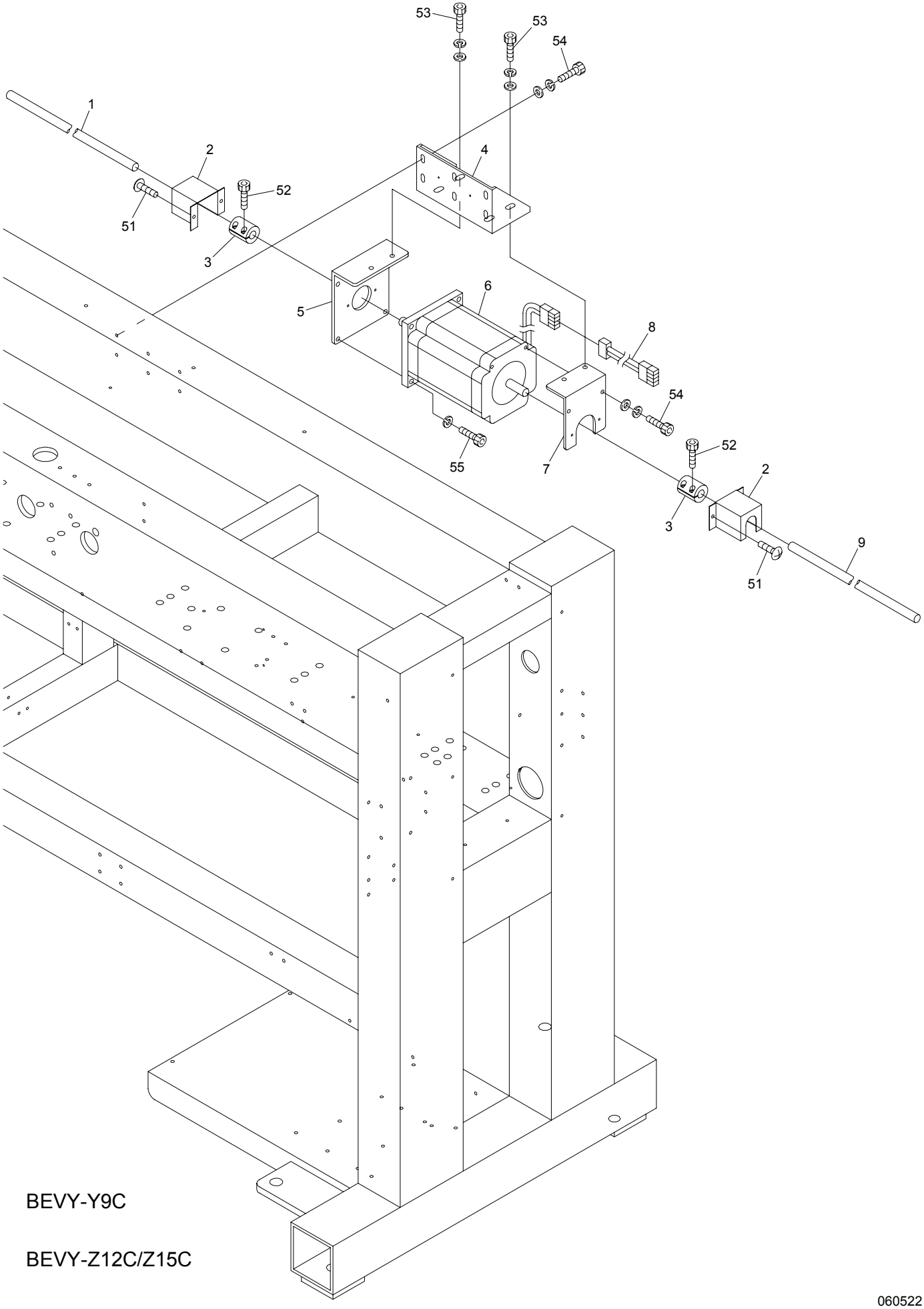

BEVY-Y9C

BEVY-Z12C/Z15C

060522

10H Pantograph drive H

ITEM	LIST No.	DESCRIPTION	Q'TY	NOTE
1	SC481330	H-pantograph drive shaft L(For 2T)	1	2T
	SC481140	H-pantograph drive shaft L(For 4T)	1	4T
	SC480371	H-pantograph drive shaft L(C06,P520) 2764L	1	6T
	SC481421	H-pantograph drive shaft L(C08,P=380) 2544L	1	8T
2	SC250110	Connecting cover(CE)	2	
	SC250030	Connecting cover	2	
3	HH481932	Pulse motor coupling	2	
4	SC480220	H-pulse motor bracket	1	
5	SC480340	H-pulse motor stay A	1	
6	KA480010	Pulse motor(TS3560N1)	1	2T
	HV480060	Pulse motor(TS3560N2)	1	4T/6T/8T
7	SC481280	H-pulse motor stay C	1	2T
	SC480350	H-pulse motor stay B	1	4T/6T/8T
8	EAY053A0	H2313 pulse motor convert cable for NY-B	1	4T/6T/8T
9	SC480361	H-pantograph drive shaft R(794L)	1	
51		Truss screw M4×6(Chromate)		
52		Hex.socket bolt M5×14(Black)		
53		Hex.socket bolt M8×20(Black)		
54		Hex.socket bolt M6×20(Black)		
55		Hex.socket bolt M8×25(Black)		

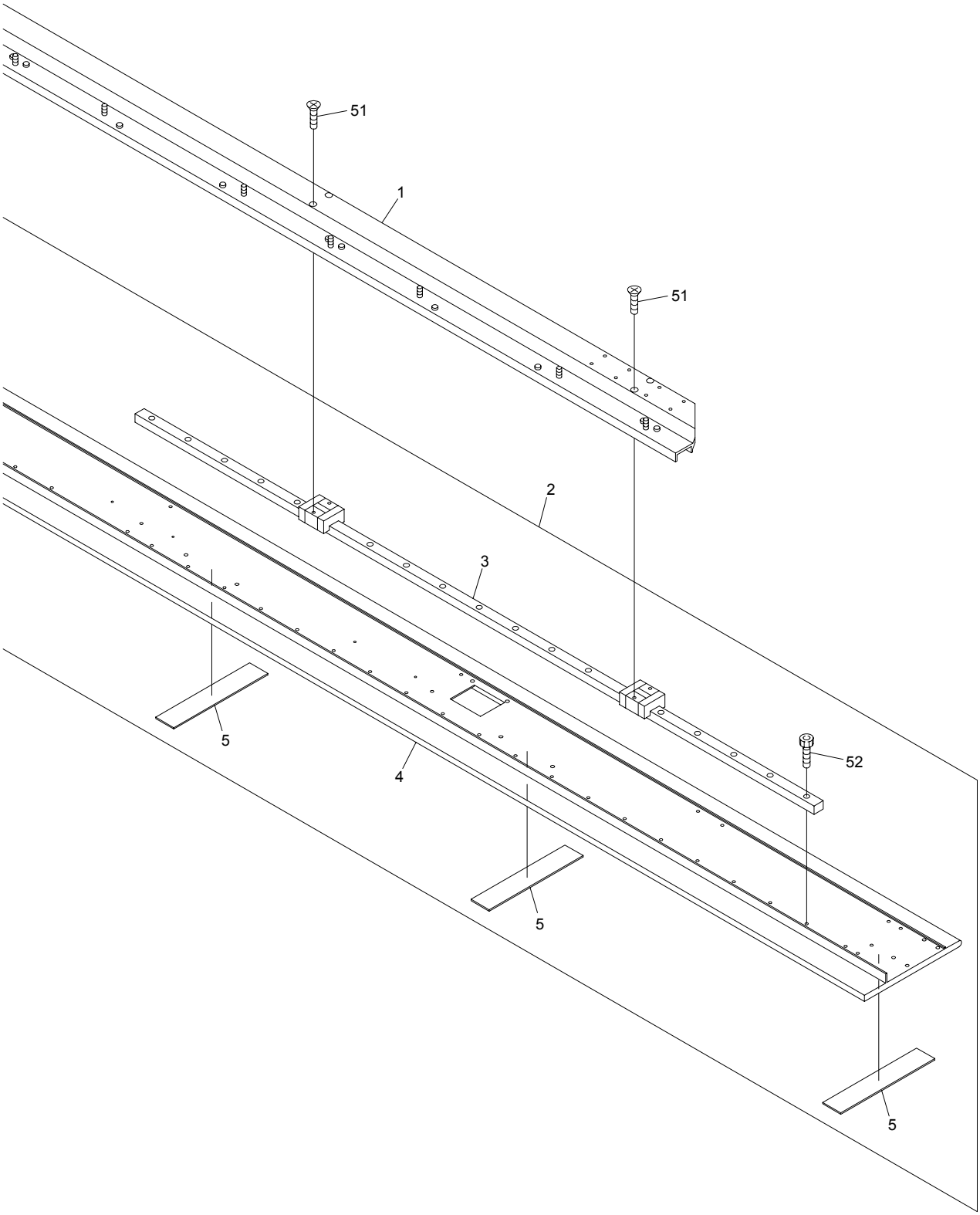
51
1
51
2
3
5
4
52
5
5

10I Pantograph drive I

ITEM	LIST No.	DESCRIPTION	Q'TY	NOTE
1	SC481730	V-slide bracket for QS(For 2T) P=520	1	2T
	SC481750	V-slide bracket for QS(For 4T) P=520	1	4T
	SC481770	V-slide bracket for QS(For 6T) P=520	1	6T
	SC481780	V-slide bracket for QS(For 8T) P=380	1	8T
2	SC481401	V-guide pantograph frame a'ssy(2T,P=520)	1	2T
	SC481201	V-guide pantograph frame a'ssy(4T,P=520)	1	4T
	SC480801	V-guide pantograph frame a'ssy(6T,P=520)	1	6T
	SC481431	V-guide pantograph frame a'ssy(8T,P=380)	1	8T
3	SC481290	LM guide(L=1540)	1	2T
	SC480820	LM guide(L=1120)	2	4T
			3	6T
	SC481540	LM guide(L=940)	1	8T
	SC481550	LM guide(L=1060)	2	8T
4	SC481241	V-guide pantograph frame(For 2T) P=520	1	2T
	SC481191	V-guide pantograph frame(For 4T) P=520	1	4T
	SC480811	V-guide pantograph frame(For 6T) P=520	1	6T
	SC481501	V-guide pantograph frame(For 8T) P=380	1	8T
5	SC480830	V-guide felt(L=150)	H + 2	
51		Flush screw M4×10		
52		Hex.socket bolt M4×12(Black)		

10J Pantograph drive J

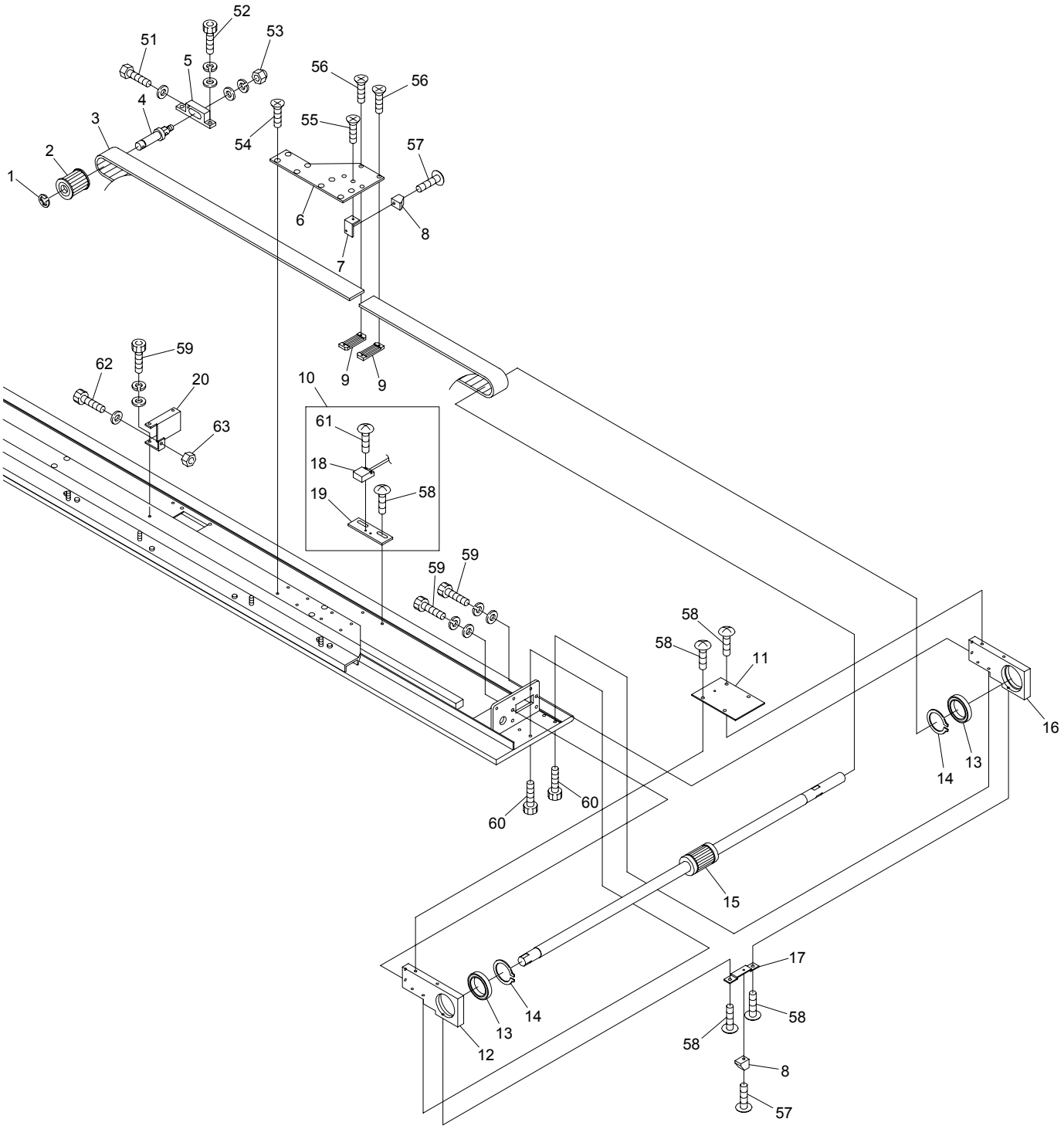

BEVY-Y9C BEVY-Z12C/Z15C

060522

10J Pantograph drive J

ITEM	LIST No.	DESCRIPTION	Q'TY	NOTE
1	A9012052	E-ring(φ10)	1	
2	SC480010	Pantograph drive pulley(Front)	1	
3	SC480020	Timing belt MA5	1	
4	HH481991	Timing pulley shaft	1	
5	SJ480090	V-pulley bracket	1	
6	SC480260	V-guide base plate	1	
7	SC480190	V-side magnet fixed bracket a'ssy	1	
8	A9052030	Magnet M-102A-02	2	
9	HP482940	Timing belt set rack(5M)	2	
10	SC480201	V-side origin sensor bracket a'ssy	1	
11	SC480230	V-slide block plate	1	
12	SC480300C	V-slide block R	1	
13	A9010061	Bearing No.6806	2	
14	A9012401	Stop ring S-30	2	
15	SJ480050	Ball spline LT +pulley(S5M) for small pulse DYHE	1	
16	SC480310C	V-slide block L	1	
17	SC480241	V-slide block bar	1	
18	A9052031	Switch(MH-601AM)	1	
19	SC481720	V-side origin sensor bracket	1	
20	SJ480200	Pulley tension support stay(V-side)	1	
51		Hex.bolt M4×25		
52		Hex.socket bolt M5×15(Black)		
53		Hex.cap nut M8		
54		Flush screw M4×6		
55		Flush screw M3×8		
56		Flush screw M3×10		
57		Truss screw M3×8		
58		Truss screw M4×8		
59		Hex.socket bolt M4×10		
60		Hex.socket bolt M4×12		
61		Truss screw M3×8(SUS)		
62		Hex.socket bolt M4×40(Black)		
63		Hex.nut M4		

10K Pantograph drive K

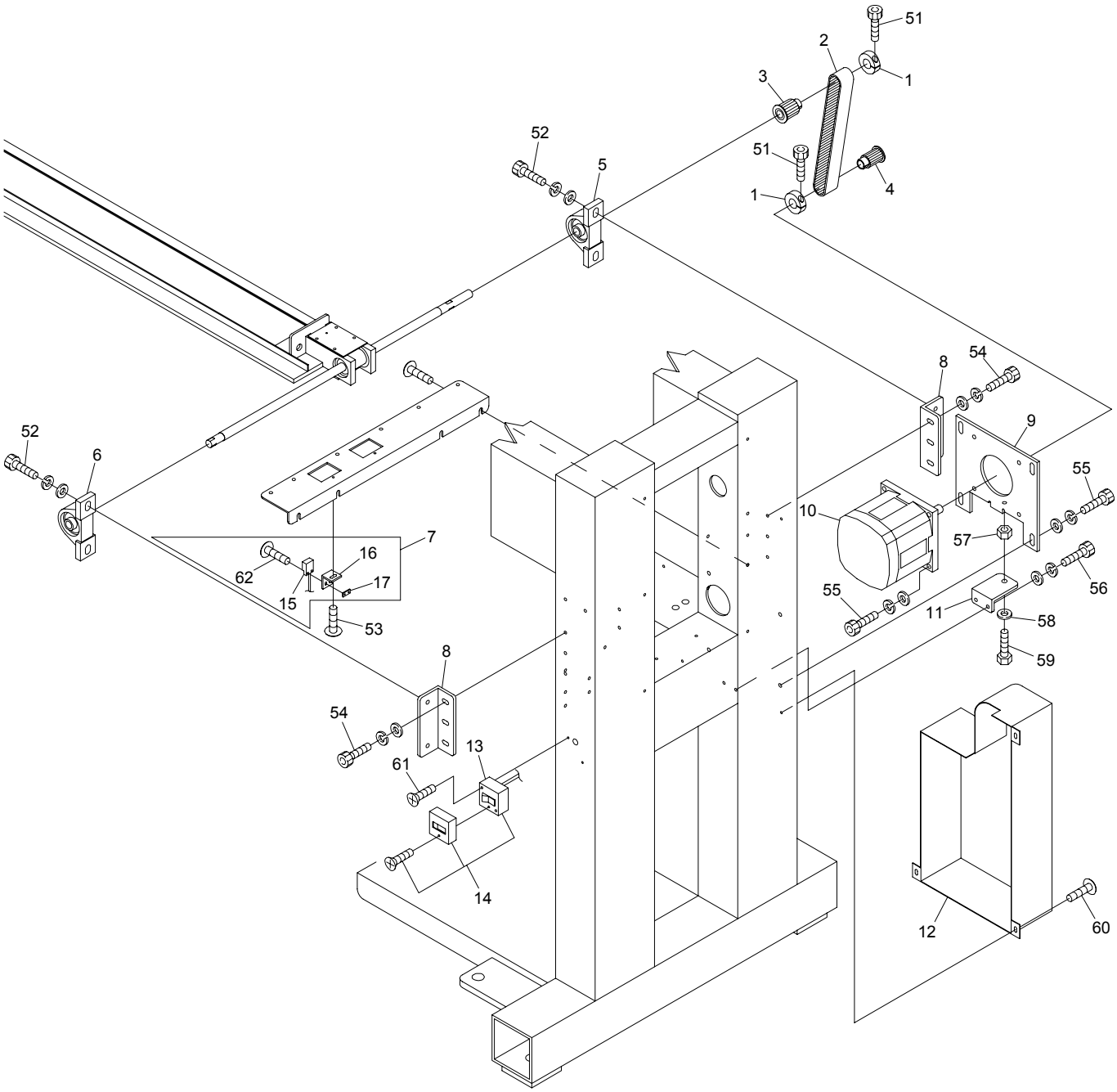

BEVY-Y9C BEVY-Z12C/Z15C

060522

10K Pantograph drive K

ITEM	LIST No.	DESCRIPTION	Q'TY	NOTE
1	HH481980	φ19 clamp	2	
2	A9020211	Timing belt(030-MA5-0120E-F)	1	
3	SC480000	Pantograph drive pulley(Rear)	1	
4	SJ480000	Pantograph drive pulley(16 tooth)	1	
5	A9011128	Pillow unit(UCP202E4)	1	
6	A9011242	Pillow unit(UCP202DE4)	1	
7	SC480181	H-side origin sensor bracket a'ssy	1	
8	SC480070	Spline bearing bracket	2	
9	SJ480030	V-pulse motor fixed plate	1	
10	SC480170	V-pulse motor(TS3650N3)	1	
11	SJ480040	Tension bracket(V-side)	1	
12	SJ250070	Timing belt cover(DYHE)	1	
13	KW710060	Fluorescent lamp cable(100V)	1	
	KW710070	Fluorescent lamp cable(200V)	1	
14	A9052029	Exposure switch WS3001	1	
15	A9052031	Switch(MH-601AM)	1	
16	SC481710	H-side origin sensor bracket	1	
17	RF450041	Origin sensor fixed nut	1	
51		Hex.socket bolt M5×20(Black)		
52		Hex.socket bolt M8×25(Black)		
53		Truss screw M4×10		
54		Hex.socket bolt M6×18		
55		Hex.socket bolt M8×22		
56		Hex.socket bolt M6×15(Chromate)		
57		Hex.nut M8		
58		Plain washer(Large) M8		
59		Hex.bolt M8×45		
60		Truss screw M5×8		
61		Flush screw M4×12		
62		Truss screw M3×12(SUS)		

11A Control A

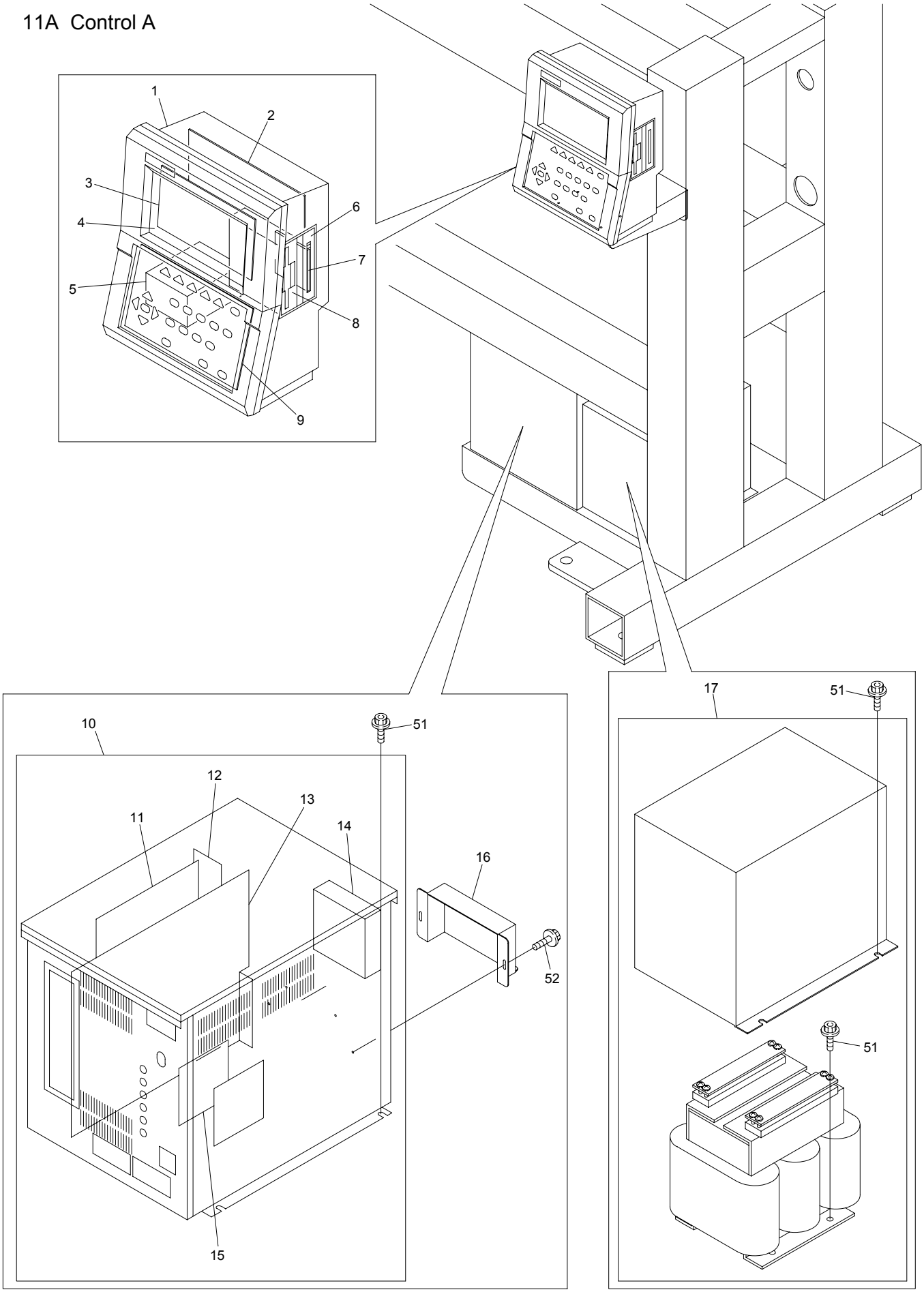

BEVY-Y9 BEVY-Y9F BEVY-Y9C BEVY-Z12/Z15 BEVY-Z12F BEVY-Z12C/Z15C

11A Control A

ITEM	LIST No.	DESCRIPTION	Q'TY	NOTE
1	E A Y 0 9 1 A 1	VS automat controller	1	
2	E B Y 0 3 0 1 0	10210 CPU board(VS)	1	
3	E D Y 0 0 2 4 0	Back-light inverter for LCD CXA-L0612A	1	
4	E D Y 0 0 2 3 0	Color LCD(TCG057QV1AC)	1	
5	E D Y 0 0 2 5 0	Switching power(MTW030)	1	
6	E B Y 0 3 0 3 0	10260 CF board(VS)	1	
7	A 9 0 5 4 0 5 4	Compact flash 32MB	1	
8	E B Y 0 2 4 4 0	Floppy disk drive(YD-702D)	1	
9	E B Y 0 3 0 2 0	10220 KS board(VS)	1	
10	E A Y 0 9 0 A 2	UAD-16 VY driver	1	
11	E B Y 0 3 0 7 0	8691 inverter unit	1	
12	E B Y 0 3 0 4 0	10110 back board(VY)	1	
13	E B Y 0 3 0 5 0	10120 control board(VY)	1	
14	F A 9 0 4 1 4 7	DC fan PUDC12Z4	1	
15	E B Y 0 3 0 6 0	10130 PMD unit(VY)	1	
16	P N 5 1 0 0 0 1	Driver cable cover hold	1	
17	E A Y 0 9 1 A 3	VY transformer 1P(T1506A)	1	
	E A Y 0 9 0 A 3	VY transformer 3P(T1507A)	1	
51		Hex.socket flange bolt M6×12		
52		Hex.socket flange bolt M3×6		

11B-1 Control B(2T/4T)

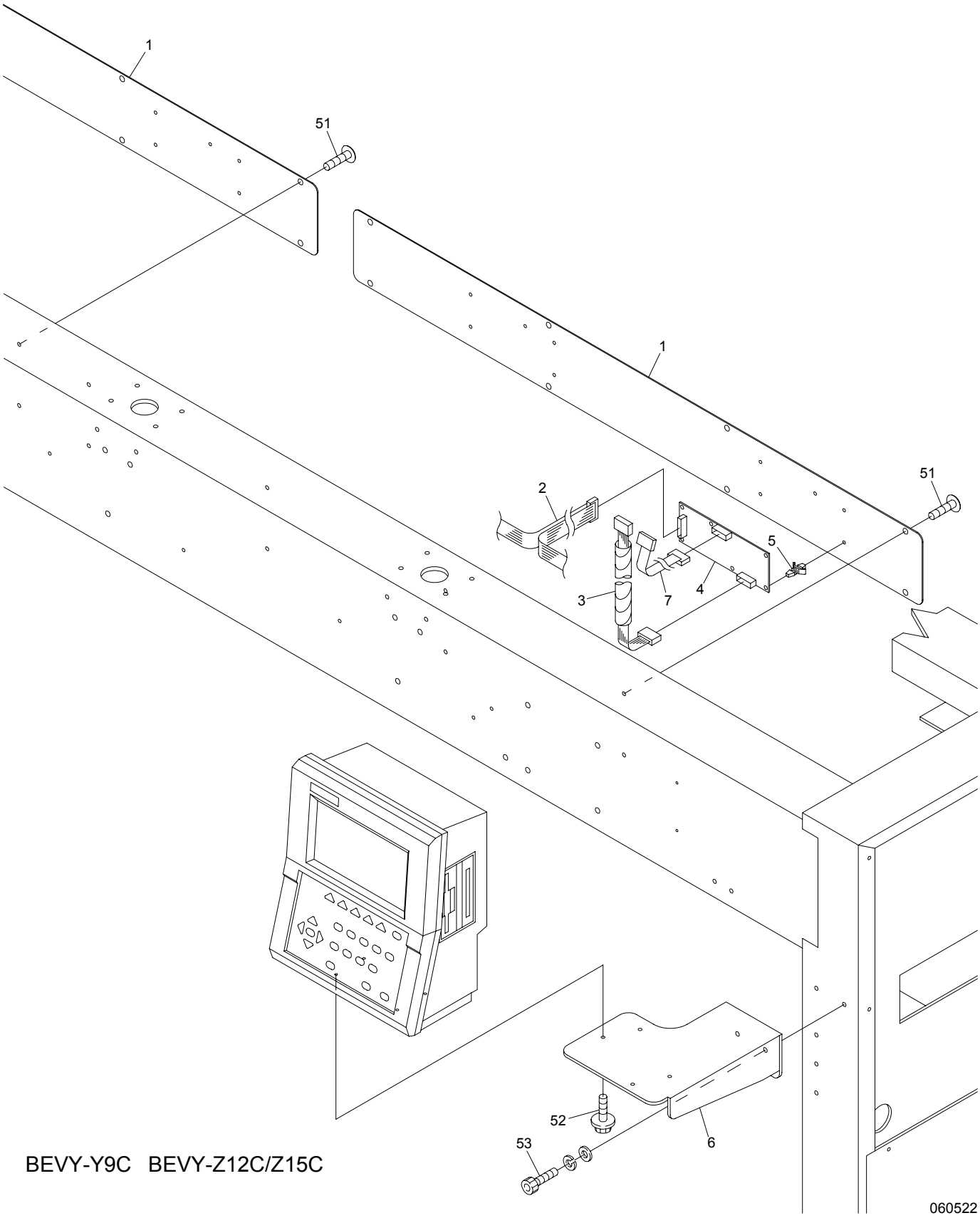

BEVY-Y9C BEVY-Z12C/Z15C

11B-1 Control B(2T/4T)

(H=Head Q'TY)

ITEM	LIST No.	DESCRIPTION	Q'TY	NOTE
1	SC510091	Cable cover(C02)	2	2T
	SC510180	Cable cover(C04) P=520	2	4T
2	2DSJ02520	Flat cable(DYHE-C02,P=520)	1	2T
	2DSJ04520	Flat cable(DYHE-C04,P=520)	1	4T
3	RD510030	Middle harness(Between duct and head)	H×1	
4	EBY01663	8511 Duct board	H×1	
5	A9068048	Locking guard spacer	H×5	
6	SJ510000	Controler fixed base	1	
7	EBY01625	H1842 16 needle flat cable	H×1	
51		Truss screw M6×10		
52		Hex.socket flange bolt M4×10(Chromate)		
53		Hex.socket bolt M6×15(Chromate)		

11B-2 Control B(6T/8T)

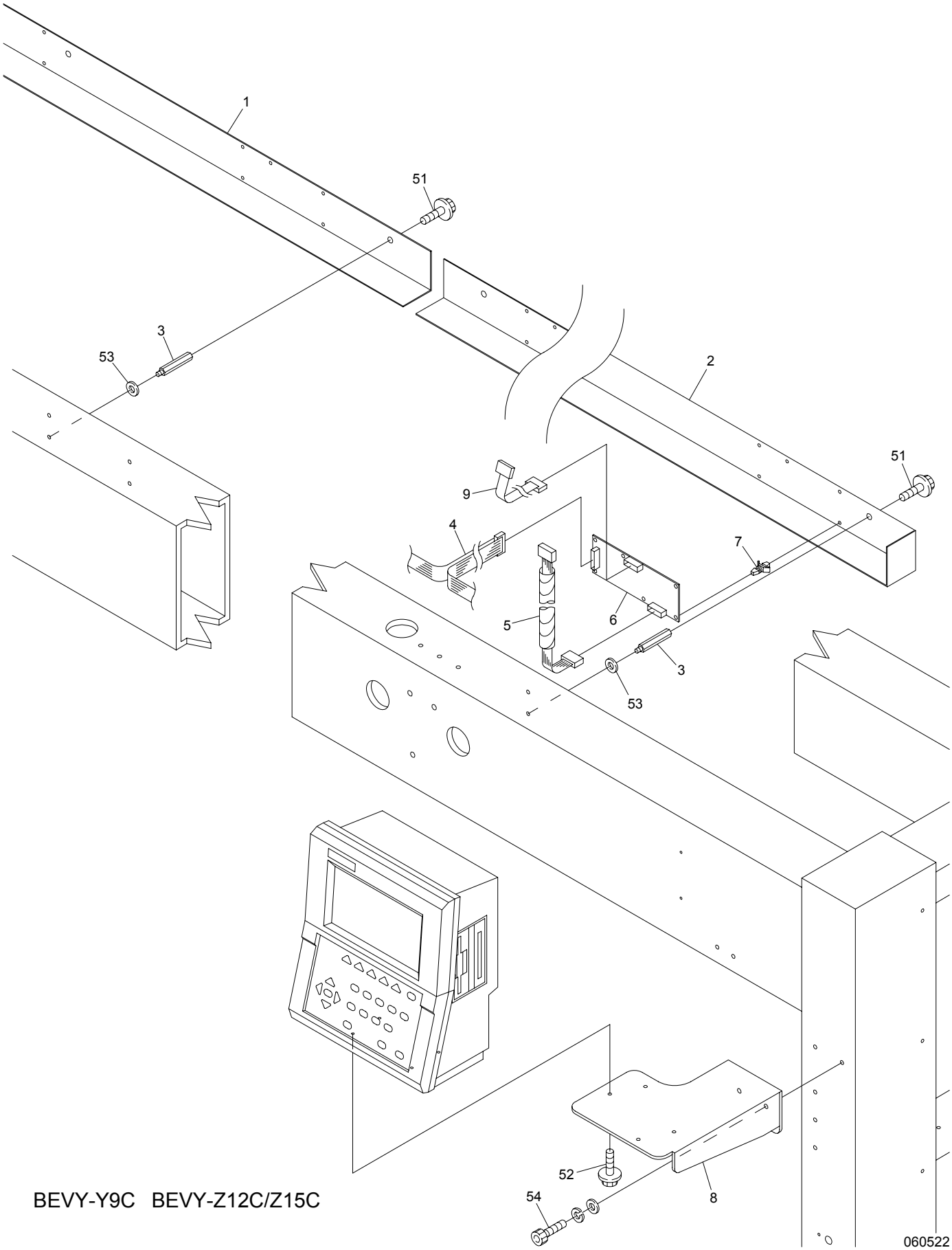

BEVY-Y9C BEVY-Z12C/Z15C

11B-2 Control B(6T/8T)

(H=Head Q'TY)

ITEM	LIST No.	DESCRIPTION	Q'TY	NOTE
1	SC510040	Cable case L	1	6T
	SC510120	Cable case L(For 8T) P=380	1	8T
2	SC510030	Cable case R	1	6T
	SC510110	Cable case R(For 8T) P=380	1	8T
3	SC510020C	Roof stad	6	
4	2DSJ06520	Flat cable(DYHE-C06,P=520)	1	6T
	2DSJ08380	Flat cable(DYHE-C08,P=380)	1	8T
5	HV510200	Between ducthead and duct harness(CE)	H×1	
	RD510030	Middle harness(Between duct and head)	H×1	
6	EBY01663	8511 Duct board	H×1	
7	A9068048	Locking guard spacer	H×5	
8	SJ510000	Controler fixed base	1	
9	EBY01625	H1842 16 needle flat cable	H×1	
51		Hex.socket flange bolt M6×12(Chromate)		
52		Hex.socket flange bolt M4×10(Chromate)		
53		Plain washer M6		
54		Hex.socket bolt M6×15(Chromate)		

12-1 Accessories(Z12)

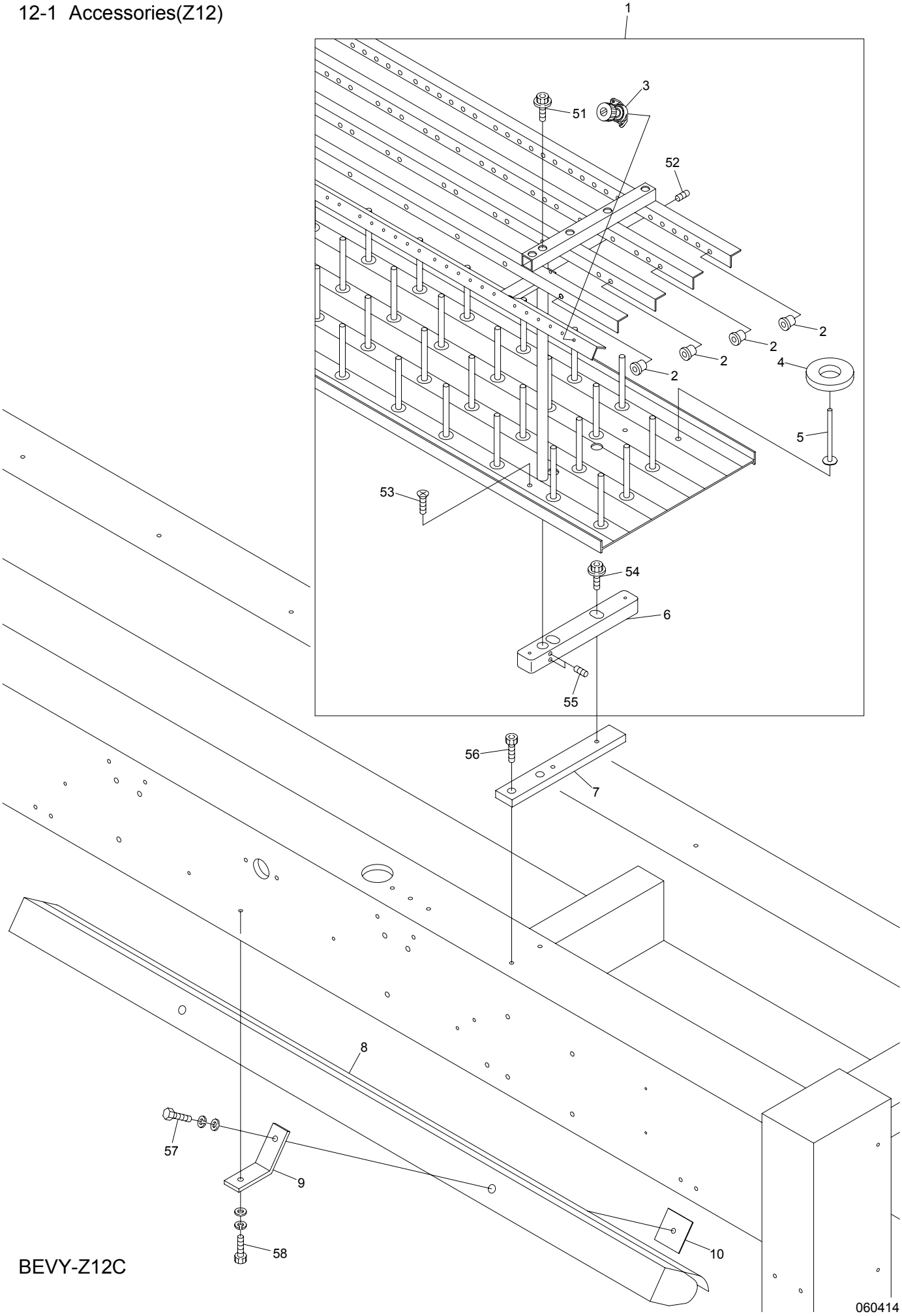

BEVY-Z12C

12-1 Accessories(Z12)

(H=Head Q'TY)(* Depends on machine type)

ITEM	LIST No.	DESCRIPTION	Q'TY	NOTE
1	2CSJ1202520	Spool holder a'ssy(DYHE-Z12-C02,P=520)	1	2T
	2CSJ1204520	Spool holder a'ssy(DYHE-Z12-C04,P=520)	1	4T
	2CSJ1206520	Spool holder a'ssy(DYHE-Z12-C06,P=520)	1	6T
	2CSJ1208520	Spool holder a'ssy(DYHE-Z12-C08,P=380)	1	8T
2	HT240480	Thread guide ceramic(White)	H×26	
	HT240490	Thread guide ceramic(Gray)	H×4	First needle only
3	HP241430	Second tension unit complete	H×12	
4	KF710390	Spool holder felt(8×34×φ70)	H×12	
5	HT710000	Spool holder rod	H×12	
6	SK710000	Spool holder base block	5	*
7	SH710010	Spool holder plate(DYH-Z12)	5	*
8	HV710010	Fluorescent lamp MK-4111T3-A/B(100V)	2	4T/6T/8T
	HV710020	Fluorescent lamp MK-4111T4-C/D(200V)	2	4T/6T/8T
9	SC510000	Fluorescent lamp fixing bracket	4	4T/6T/8T
10	HB710020	Fluorescent lamp fixing bracket	4	4T/6T/8T
51		Hex.socket bolt M5×10(With spring washer)		
52		Hex.socket set screw M5×8		
53		Flush screw M4×8		
54		Hex.socket flang bolt M6×25		
55		Hex.socket set screw M6×8		
56		Hex.socket bolt M6×15(Black)		
57		Hex.bolt M6×20		
58		Hex.socket bolt M6×18(With washer)		

12-2 Accessories(Z15)

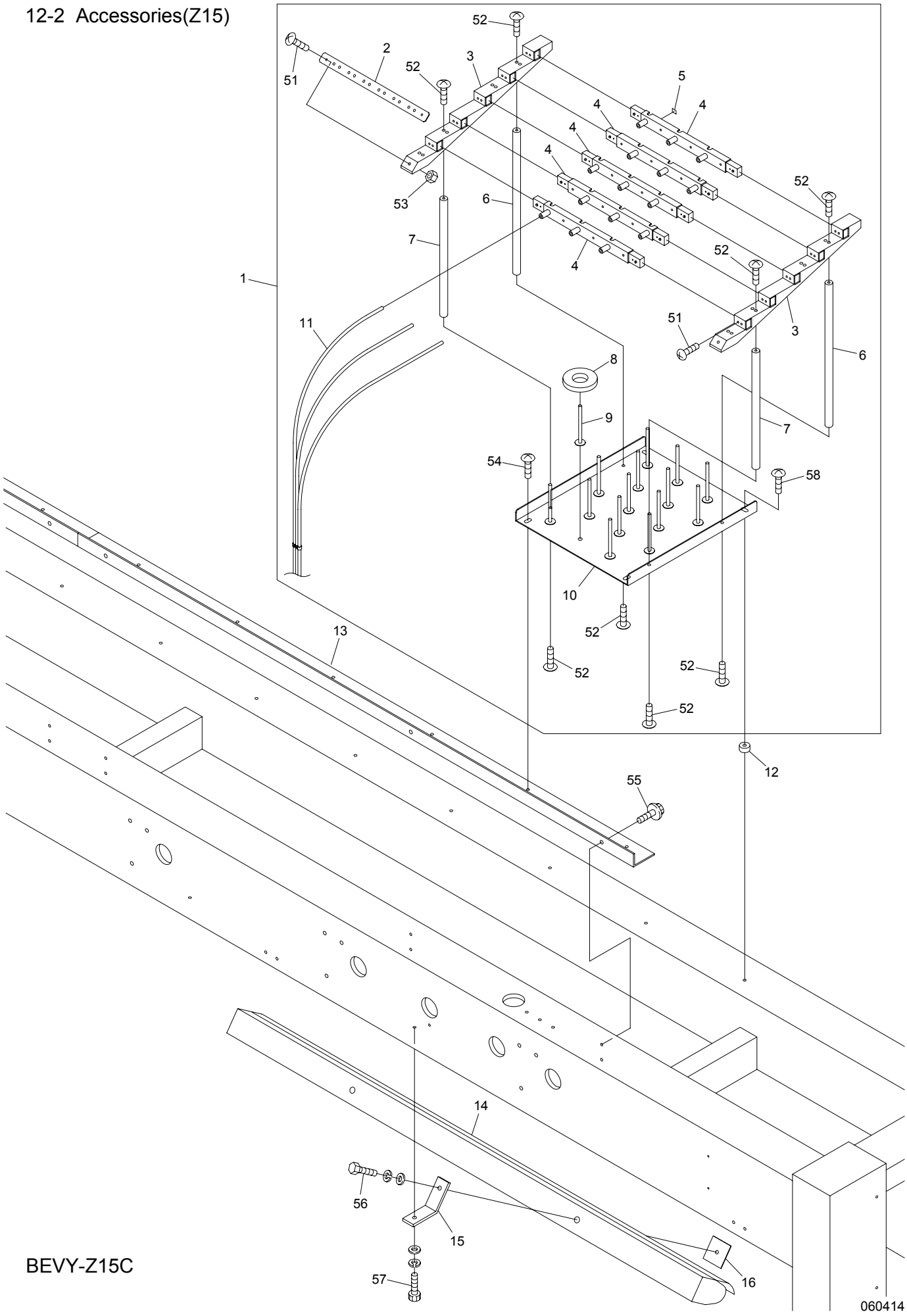

BEVY-Z15C

12-2 Accessories(Z15)

(H=Head Q'TY)

ITEM	LIST No.	DESCRIPTION	Q'TY	NOTE
1	PP710000	Spool holder a'ssy(VY-Z15)	H×1	Includes below parts RV240020,RV240100 RV240110 RV240180 A9012438 Truss screw M3×14 Truss screw M3×5
2	RD710370	Hose hold bracket	H×1	
3	RD710340	Guide base(15 needles)	H×2	
4	RD710330	Thread guide base	H×5	
5	RD710380	Number seal	H×1	
6	RD710361	Pillar B	H×2	
7	RD710351	Pillar A	H×2	
8	KF710390	Spool holder felt(8×34×φ70)	H×15	
9	HT710000	Spool holder pin	H×15	
10	SC710010	Spool holder base	H×1	
11	RV710050	Spool tube DB3-6×4		Cut product
12	SC710030	Spool holder spacer	H×2	
13	SJ710050	Spool holder bracket(Type 2 piece) P=520	1	2T
			2	4T
	SJ710090	Spool holder bracket(ZQ6-C06) P=520	1	6T
	SJ710080	Spool holder bracket(ZQ6-C08) P=380	1	8T
14	HV710010	Fluorescent lamp M-4111T3-A/B(100V)	2	4T/6T/8T
	HV710020	Fluorescent lamp M-4111T4-C/D(200V)	2	4T/6T/8T
15	SC510000	Fluorescent lamp bracket	4	4T/6T/8T
16	HB710020	Fluorescent lamp mount plate	4	4T/6T/8T
51		Truss screw M4×10		
52		Truss screw M5×12		
53		Hex.nut M4		
54		Truss screw M6×10		
55		Hex.socket flange bolt M6×12(Chromate)		
56		Hex.bolt M6×20		
57		Hex.socket bolt M6×18(Chromate)		
58		Truss screw M6×20		

INDEX

LIST No.	SECTION No.	ITEM	LIST No.	SECTION No.	ITEM
1SPP3803800	08-1	21	A9012415	04B	26
1SPP3803800	08-2	21	A9012421	03	21
1SPP5205200	08-1	21	A9012437	10A	3
1SPP5205200	08-2	21	A9012437	10B	9
2CSJ1202520	12-1	1	A9012438	06-2	4
2CSJ1204520	12-1	1	A9013066	02A	8
2CSJ1206520	12-1	1	A9013070	00B	6
2CSJ1208520	12-1	1	A9014059	01A	7
2DSJ02520	11B-1	2	A9014161	00A-1	7
2DSJ04520	11B-1	2	A9014161	00A-2	7
2DSJ06520	11B-2	4	A9014163	00A-1	11
2DSJ08380	11B-2	4	A9014163	00A-2	11
A9010003	08-1	7	A9014163	00B	16
A9010003	08-2	7	A9014166	04C	15
A9010061	10J	13	A9014167	04A-1	21
A9010063	07	20	A9014167	04A-2	26
A9010065	04B	30	A9014168	04D	3
A9010073	03	20	A9019049	00A-1	14
A9010113	07	13	A9019049	00A-2	14
A9011111	01A	14	A9020180	08-1	5
A9011128	10K	5	A9020180	08-2	5
A9011242	10K	6	A9020211	10K	2
A9011243	10C	5	A9052028	02C	3
A9011243	10D	2	A9052029	10K	14
A9011243	10E	2	A9052030	10J	8
A9011243	10F	3	A9052031	10J	18
A9011244	10C	6	A9052031	10K	15
A9011244	10F	2	A9052078	02B	4
A9011284	02A	22	A9052080	04E	6
A9012002	02B	8	A9052081	04E	5
A9012027	01A	25	A9053079	07	2
A9012052	10C	20	A9053081	08-1	3
A9012052	10D	16	A9053081	08-2	3
A9012052	10E	16	A9053082	02B	33
A9012052	10F	17	A9054054	11A	7
A9012052	10J	1	A9056008	02A	17
A9012063	08-1	9	A9056036	05	1
A9012063	08-2	9	A9056037	04C	22
A9012068	07	12	A9056038	02C	1
A9012127	04B	7	A9056042	04C	22
A9012127	04C	18	A9060063	07	17
A9012127	07	19	A9065092	02B	13
A9012208	07	4	A9065092	07	6
A9012368	04B	21	A9065093	07	7
A9012401	10J	14	A9065107	02B	33

INDEX

LIST No.	SECTION No.	ITEM	LIST No.	SECTION No.	ITEM
A906803 0	10C	3	HB230271C	04C	3
A9068032	06-1	21	HB230281C	04C	6
A9068032	06-2	22	HB230361	04C	5
A9068048	11B-1	5	HB230620	03	25
A9068048	11B-2	7	HB230650	03	7
A9068049	10C	22	HB230800	03	10
A9068050	10C	23	HB240020C	05	9
EAY053A0	10H	8	HB240030C	05	10
EAY090A2	11A	10	HB240041	05	11
EAY090A3	11A	17	HB560060	05	13
EAY091A1	11A	1	HB560080	05	12
EAY091A3	11A	17	HB560211	05	14
EBY01625	06-2	19	HB710020	12-1	10
EBY01625	11B-1	7	HB710020	12-2	16
EBY01625	11B-2	9	HH481932	10H	3
EBY01627	06-1	16	HH481980	10C	12
EBY01650	07	3	HH481980	10D	8
EBY01663	11B-1	4	HH481980	10E	8
EBY01663	11B-2	6	HH481980	10F	9
EBY02440	11A	8	HH481980	10K	1
EBY02600	06-1	15	HH481991	10C	17
EBY02610	06-2	18	HH481991	10D	13
EBY03010	11A	2	HH481991	10E	13
EBY03020	11A	9	HH481991	10F	14
EBY03030	11A	6	HH481991	10J	4
EBY03040	11A	12	HM140120	00B	8
EBY03050	11A	13	HM270000	02A	25
EBY03060	11A	15	HM270010	02B	6
EBY03070	11A	11	HP241430	12-1	3
EDY00230	11A	4	HP321090	01A	13
EDY00240	11A	3	HP321710C	01B	5
EDY00250	11A	5	HP321720C	01B	1
EP530030	08-1	3	HP482940	10C	15
EP530030	08-2	3	HP482940	10D	11
FA904147	11A	14	HP482940	10E	11
FA999052	06-1	22	HP482940	10F	12
FN070011RG	04A-1	15	HP482940	10J	9
FN070011RG	04A-2	14	HS210020	01A	1
FR92300290A380A	10B	1	HS210021	01A	1
FR92460434A520S	10B	1	HS210031	01A	24
HB230070C	03	23	HS210042	01A	11
HB230080C	03	22	HS210051	02A	13
HB230200	04B	11	HS210060	02A	18
HB230220C	04C	9	HS210070	02A	16
HB230261	04C	8	HS210080	02A	21

INDEX

LIST No.	SECTION No.	ITEM	LIST No.	SECTION No.	ITEM
HS210090	02A	23	HV510200	11B-2	5
HS210100	02A	12	HV710010	12-1	8
HS210111	02A	10	HV710010	12-2	14
HS210121	02A	11	HV710020	12-1	8
HS210300	02A	14	HV710020	12-2	14
HS220010	01A	4	KA480010	10H	6
HS270030	02B	2	KC250482	01A	19
HS270070	02B	31	KC270101	04C	21
HT220061	01A	5	KC271001	02A	15
HT230120	04A-1	11	KC271940C	02A	20
HT230120	04A-2	10	KC330180	02B	3
HT230220	05	3	KC330410	02B	10
HT230263	04A-1	7	KC330510	02B	9
HT230263	04A-2	6	KF220230	01A	3
HT230280	04B	24	KF220240	01A	20
HT230290	04B	19	KF220290	01A	2
HT230330	04A-1	6	KF220302	01A	23
HT230330	04A-2	5	KF220421	01A	22
HT230340	04B	18	KF220530	01A	22
HT230410C	04C	7	KF220700	01A	21
HT230450	04B	9	KF221020	01A	23
HT230471	04B	4	KF221040	01A	21
HT230480	04B	14	KF230501	03	5
HT230491	04B	5	KF230530	04B	8
HT230510	04B	12	KF230680	03	6
HT230520	04B	20	KF230910	04A-1	10
HT230560	04B	25	KF230910	04A-2	9
HT230590	04C	1	KF710390	12-1	4
HT230620C	05	4	KF710390	12-2	8
HT230730	04B	6	KF730750	10A	1
HT230750	04B	3	KF730760	10A	2
HT230760	04B	10	KL220140	01A	8
HT240101	06-1	14	KL270091	02C	8
HT240101	06-2	10	KL270101	02C	9
HT240180	06-1	18	KL270120C	02C	11
HT240180	06-2	11	KL270131C	02C	10
HT240290	06-1	4	KL270260C	02C	2
HT240290	06-2	7	KL270450	02C	7
HT240480	12-1	2	KN271560C	02A	24
HT240490	12-1	2	KN271750	02B	7
HT270063	04E	15	KN271782	02B	5
HT270182	02A	3	KN272010	02A	9
HT710000	12-1	5	KN272350	02B	17
HT710000	12-2	9	KN272401	02A	19
HV480060	10H	6	KN272401	02C	5

INDEX

LIST No.	SECTION No.	ITEM	LIST No.	SECTION No.	ITEM
KN511020	01B	3	PN240010	06-1	1
KN540510	06-1	13	PN510001	11A	16
KN540510	06-2	9	PP240000	06-2	26
KV230040	04A-1	5	PP240010	06-2	21
KV230040	04A-2	4	PP710000	12-2	1
KW710060	10K	13	RA310380	08-1	2
KW710070	10K	13	RD230060	04A-2	18
KX230141	04A-1	18	RD230130	03	9
KX230141	04A-2	23	RD230150	04B	2
KX230152	04A-1	17	RD230201	04A-1	19
KX230152	04A-2	22	RD230201	04A-2	24
KX250080	01A	9	RD230250	05	8
KX250080	02A	2	RD230370	04A-1	9
KX270000	02A	26	RD230370	04A-2	8
KX270010	02A	6	RD230480	04A-1	2
KX270070	02C	12	RD230480	04A-2	1
KX270430	02A	27	RD230490	04A-1	3
KX510140	04E	7	RD230490	04A-2	2
LA230140	04B	28	RD240154	06-1	6
LA270080	02C	15	RD240154	06-2	5
LA730590	10B	6	RD240271	04E	9
LA730610	10B	4	RD270020	02C	14
LA730630	10B	5	RD270040	02C	13
LA730650	10B	3	RD510030	11B-1	3
MH230161	05	7	RD510030	11B-2	5
MK230080C	04C	12	RD710330	12-2	4
MM270000	04C	13	RD710340	12-2	3
MN230090	05	5	RD710351	12-2	7
PF240010	06-1	10	RD710361	12-2	6
PF250000	04E	8	RD710370	12-2	2
PF250010P380	04E	3	RD710380	12-2	5
PF250010P520	04E	3	RF450041	10K	17
PF250020P380	04E	3	RH230271	03	28
PF250020P520	04E	3	RH230280	03	27
PG240000	06-2	26	RH230300	03	26
PG240010	06-2	13	RH230311	03	3
PG240020	06-2	21	RH230320	03	13
PG240030	06-2	25	RH230330	03	29
PG240040	06-2	3	RH230410	04A-1	4
PG250000	04E	8	RH230410	04A-2	3
PG250010P380	04E	3	RH230440	04A-1	12
PG250010P520	04E	3	RH230440	04A-2	11
PG250020P380	04E	3	RH230450	04A-1	14
PG250020P520	04E	3	RH230450	04A-2	13
PN240000	06-1	24	RH230460	04A-1	13

INDEX

LIST No.	SECTION No.	ITEM	LIST No.	SECTION No.	ITEM
RH230460	04A-2	12	RV710050	12-2	11
RH230540	04B	23	SC120010	00B	7
RH230550	04B	22	SC120030	00B	1
RH230610	03	11	SC120040	00B	3
RH230801	03	2	SC140020	00B	18
RH230810	03	4	SC140030	00B	17
RN230010	03	16	SC140041	00B	15
RN230020C	03	18	SC140090	00B	5
RN230030	03	17	SC140120	00A-1	6
RN230040	03	19	SC140120	00A-2	6
RP310170	08-1	1	SC140130	00A-1	5
RP310170	08-2	1	SC140130	00A-2	5
RP310201	08-1	2	SC140140	00B	12
RP310201	08-2	2	SC140160	00A-1	12
RP480201	10C	18	SC140160	00A-2	12
RP480201	10D	14	SC140170	00A-1	13
RP480201	10E	14	SC140170	00A-2	13
RP480201	10F	15	SC160010	00A-1	15
RQ120080	00B	4	SC160010	00A-2	15
RQ310000	08-1	8	SC160020	00A-1	16
RQ310000	08-2	8	SC160020	00A-2	16
RR230080	04C	4	SC160030	00A-1	17
RR230090	04C	2	SC160030	00A-2	17
RR240300	06-2	8	SC160041	08-2	4
RR240300C	06-1	3	SC210000	01A	15
RR240330	06-1	17	SC210010	00B	13
RR240330	06-2	20	SC210010	01A	16
RR240390	06-1	7	SC250030	10H	2
RR240390	06-2	12	SC250040	10C	9
RR240510	06-1	5	SC250040	10D	5
RR240510	06-2	6	SC250040	10E	5
RV230050	05	15	SC250040	10F	6
RV230060	03	8	SC250070	10C	10
RV230070	03	1	SC250070	10D	6
RV230180	04A-2	29	SC250070	10E	6
RV240040	06-2	14	SC250070	10F	7
RV240050	06-2	15	SC250080	01B	4
RV240062	06-2	17	SC250110	10H	2
RV240071	06-2	24	SC310000	08-1	17
RV240081	06-2	23	SC310000	08-2	17
RV240091	06-2	16	SC310010	08-1	14
RV240100	06-2	1	SC310010	08-2	14
RV240110	06-2	2	SC310021	08-1	10
RV240180	06-2	27	SC310021	08-2	10
RV250070	04D	4	SC310030	08-1	11

INDEX

LIST No.	SECTION No.	ITEM	LIST No.	SECTION No.	ITEM
SC310030	08-2	11	SC480040	10F	8
SC310040	08-2	12	SC480070	10K	8
SC310050	08-1	15	SC480080	10C	24
SC310050	08-2	15	SC480090	10F	19
SC310062	08-1	13	SC480100	10D	18
SC310062	08-2	13	SC480110	10E	18
SC310071	08-1	19	SC480120	10C	21
SC310071	08-2	19	SC480130	10F	18
SC310080	08-2	6	SC480140	10D	17
SC310090	08-2	20	SC480150	10E	17
SC310100	08-1	16	SC480170	10K	10
SC310100	08-2	16	SC480181	10K	7
SC310110	08-1	6	SC480190	10J	7
SC310120	08-1	20	SC480201	10J	10
SC310130	08-1	6	SC480210	10C	8
SC310140	08-1	20	SC480210	10D	4
SC310150	08-1	12	SC480210	10E	4
SC310160	08-2	6	SC480210	10F	5
SC310170	08-2	20	SC480220	10H	4
SC330010	07	11	SC480230	10J	11
SC330021	07	22	SC480241	10J	17
SC330030	07	21	SC480260	10J	6
SC330041	07	10	SC480290	10C	26
SC330052	07	15	SC480300C	10J	12
SC330061	07	16	SC480310C	10J	16
SC330080C	07	8	SC480330	10C	4
SC330091C	07	14	SC480330	10D	1
SC330100	07	5	SC480330	10E	1
SC330110	07	1	SC480330	10F	1
SC330120	07	18	SC480340	10H	5
SC330131	01B	2	SC480350	10H	7
SC480000	10K	3	SC480361	10H	9
SC480010	10C	19	SC480371	10H	1
SC480010	10D	15	SC480801	10I	2
SC480010	10E	15	SC480811	10I	4
SC480010	10F	16	SC480820	10I	3
SC480010	10J	2	SC480830	10I	5
SC480020	10C	14	SC481040	10G	1
SC480020	10D	10	SC481050	10G	2
SC480020	10E	10	SC481061	10G	3
SC480020	10F	11	SC481080	10G	4
SC480020	10J	3	SC481090	10G	6
SC480040	10C	11	SC481100	10G	8
SC480040	10D	7	SC481110	10G	7
SC480040	10E	7	SC481120	10G	5

INDEX

LIST No.	SECTION No.	ITEM	LIST No.	SECTION No.	ITEM
SC481140	10H	1	SC730111	10B	8
SC481191	10I	4	SC730340	10A	6
SC481201	10I	2	SC730360	10A	6
SC481210	10G	7	SC730370	10A	6
SC481220	10G	6	SC730380	10A	6
SC481230	10G	1	SF250140	04E	2
SC481241	10I	4	SF250150	04E	1
SC481280	10H	7	SG230000	04B	17
SC481290	10I	3	SG230031	04B	16
SC481300	10G	7	SG230040	04A-1	20
SC481310	10G	1	SG230050	04A-1	26
SC481330	10H	1	SG230060	04A-1	27
SC481370	08-1	1	SG230070	04A-1	22
SC481401	10I	2	SG230110	04A-1	28
SC481421	10H	1	SG230140	04A-1	24
SC481431	10I	2	SG230150	04A-1	23
SC481451	10G	3	SG230160	04D	5
SC481460	10G	6	SG230170	04B	1
SC481470	10G	8	SG230180	04B	13
SC481480	10G	7	SG230190	04B	15
SC481490	10G	1	SG230200	04A-1	25
SC481501	10I	4	SG230200	04A-2	20
SC481540	10I	3	SG230210	04C	11
SC481550	10I	3	SG230220	04A-1	8
SC481710	10K	16	SG230220	04A-2	7
SC481720	10J	19	SG230230	04A-1	16
SC481730	10I	1	SG230230	04A-2	21
SC481750	10I	1	SG230260	05	2
SC481770	10I	1	SG230270	04C	10
SC481780	10I	1	SG230280	04D	8
SC510000	12-1	9	SG230290	04D	7
SC510000	12-2	15	SG230300	04B	29
SC510020C	11B-2	3	SG230310	05	6
SC510030	11B-2	2	SG230330	04A-1	1
SC510040	11B-2	1	SG230340	03	24
SC510091	11B-1	1	SG230350	03	15
SC510110	11B-2	2	SG230360	04A-1	26
SC510120	11B-2	1	SG230390	04A-1	32
SC510180	11B-1	1	SG230410	04A-1	29
SC710010	12-2	10	SG240000	04E	9
SC710030	12-2	12	SG240040	06-1	2
SC730030	10A	5	SG240050	06-1	8
SC730041	10A	4	SG240060	06-1	9
SC730092	10B	2	SG240070	06-1	12
SC730102	10B	7	SG240080	06-1	19

INDEX

LIST No.	SECTION No.	ITEM	LIST No.	SECTION No.	ITEM
SG240090	06-1	23	SJ140130	00A-1	9
SG240100	06-1	20	SJ140130	00A-2	9
SG240110	06-1	11	SJ140220	00A-1	10
SG250060	04D	10	SJ140220	00A-2	10
SG250120	04D	6	SJ160030	08-1	4
SG270000	04E	14	SJ160040	00A-1	18
SG270010	04E	11	SJ160461	00A-1	4
SG270030	02C	15	SJ160532	00A-1	4
SG270040	02C	13	SJ160652	00A-2	4
SG270050	04C	14	SJ160691	00A-2	4
SG270060	04C	16	SJ160891	00A-1	4
SG270070	04C	17	SJ160911	00A-1	4
SG270081	02C	4	SJ160961	00A-2	4
SG270090	02C	6	SJ160981	00A-2	4
SG270100	02C	14	SJ210040	02A	18
SG270110	04C	20	SJ210080	01A	18
SG270120	04C	19	SJ210090	01A	17
SG270130	04E	13	SJ210120	01A	10
SG270140	04E	12	SJ210150	01A	17
SG270150	04E	17	SJ220010	01A	6
SG270160	04E	18	SJ250041	08-1	18
SG270170	04E	10	SJ250041	08-2	18
SG270180	04E	16	SJ250060	10C	1
SG270190	04C	13	SJ250070	10K	12
SH710010	12-1	7	SJ250080	08-2	22
SJ120001	00B	2	SJ250090	10C	2
SJ120011	00B	2	SJ250240	03	30
SJ120031	00B	2	SJ270020	02A	4
SJ120042	00B	2	SJ270030	02A	7
SJ140000	00B	14	SJ270040	02A	5
SJ140010	00B	11	SJ270050	02B	15
SJ140020	00B	10	SJ270060	02B	14
SJ140040	00A-1	3	SJ270070	02B	11
SJ140040	00A-2	3	SJ270080	02B	12
SJ140050	00A-1	1	SJ270090	02B	16
SJ140050	00A-2	1	SJ270100	02B	15
SJ140060	00A-1	2	SJ270110	02A	28
SJ140060	00A-2	2	SJ270121	02A	1
SJ140070	00A-2	3	SJ320010	01A	12
SJ140080	00A-2	1	SJ330021	07	9
SJ140090	00A-2	2	SJ330041	07	22
SJ140100	00B	19	SJ330050	07	23
SJ140110	00B	9	SJ330060	07	24
SJ140120	00A-1	8	SJ480000	10C	13
SJ140120	00A-2	8	SJ480000	10D	9

INDEX

LIST No.	SECTION No.	ITEM	LIST No.	SECTION No.	ITEM
SJ480000	10E	9	SL230200	04A-1	30
SJ480000	10F	10	SL230200	04A-2	30
SJ480000	10K	4	SL250081	04D	9
SJ480010	10C	7	SL250091	04D	11
SJ480010	10D	3	SL250110	04D	1
SJ480010	10E	3	SL250140	04D	1
SJ480010	10F	4	SL250150	04D	2
SJ480020	10C	25	SL250160	04D	2
SJ480020	10D	19	SL250230	04D	12
SJ480020	10E	19	SL270000	04E	10
SJ480020	10F	20	SL270010	04E	11
SJ480030	10K	9	SL270020	04E	18
SJ480040	10K	11	SL270030	04E	17
SJ480050	10J	15	SL270040	04E	19
SJ480060	10C	7	SM250160	04E	4
SJ480060	10D	3			
SJ480060	10E	3			
SJ480060	10F	4			
SJ480081	10C	16			
SJ480081	10D	12			
SJ480081	10E	12			
SJ480081	10F	13			
SJ480090	10J	5			
SJ480200	10J	20			
SJ510000	11B-1	6			
SJ510000	11B-2	8			
SJ710050	12-2	13			
SJ710080	12-2	13			
SJ710090	12-2	13			
SK710000	12-1	6			
SL210081	03	14			
SL210090	03	14			
SL230001	04A-2	16			
SL230011	04A-2	16			
SL230021	04A-2	17			
SL230031	04A-2	19			
SL230040	04A-2	25			
SL230070	04A-2	15			
SL230080	04A-2	27			
SL230090	04A-2	28			
SL230130	03	12			
SL230140	04A-2	32			
SL230180	04B	27			
SL230190	04A-1	31			
SL230190	04A-2	31			