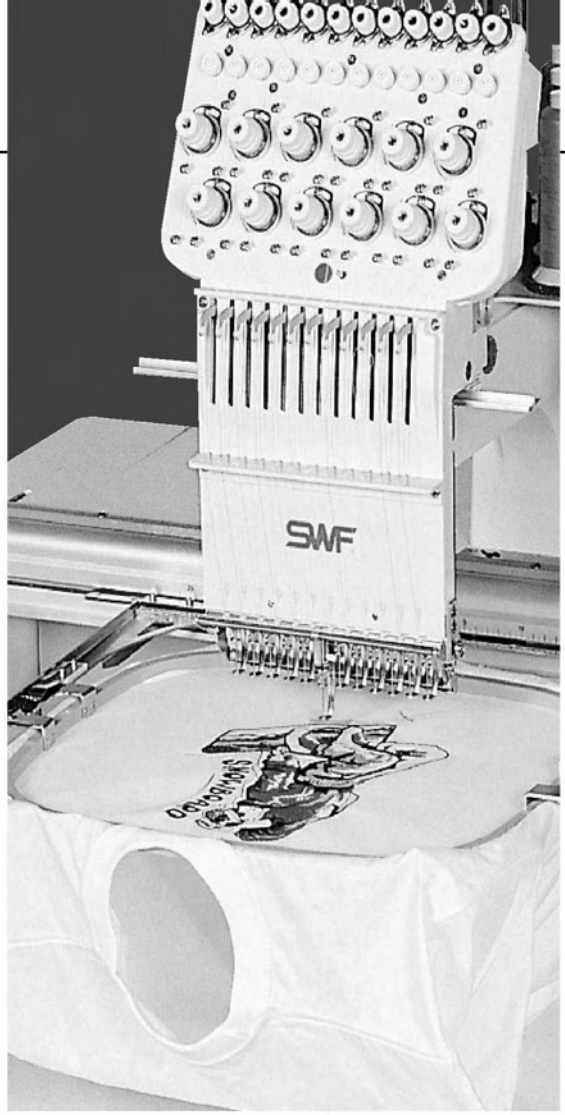

PARTS BOOK

SINGLE-HEAD AUTOMATIC EMBROIDERY MACHINE

SWF®

PME-100326

SunStar CO.,LTD

Machine Layout

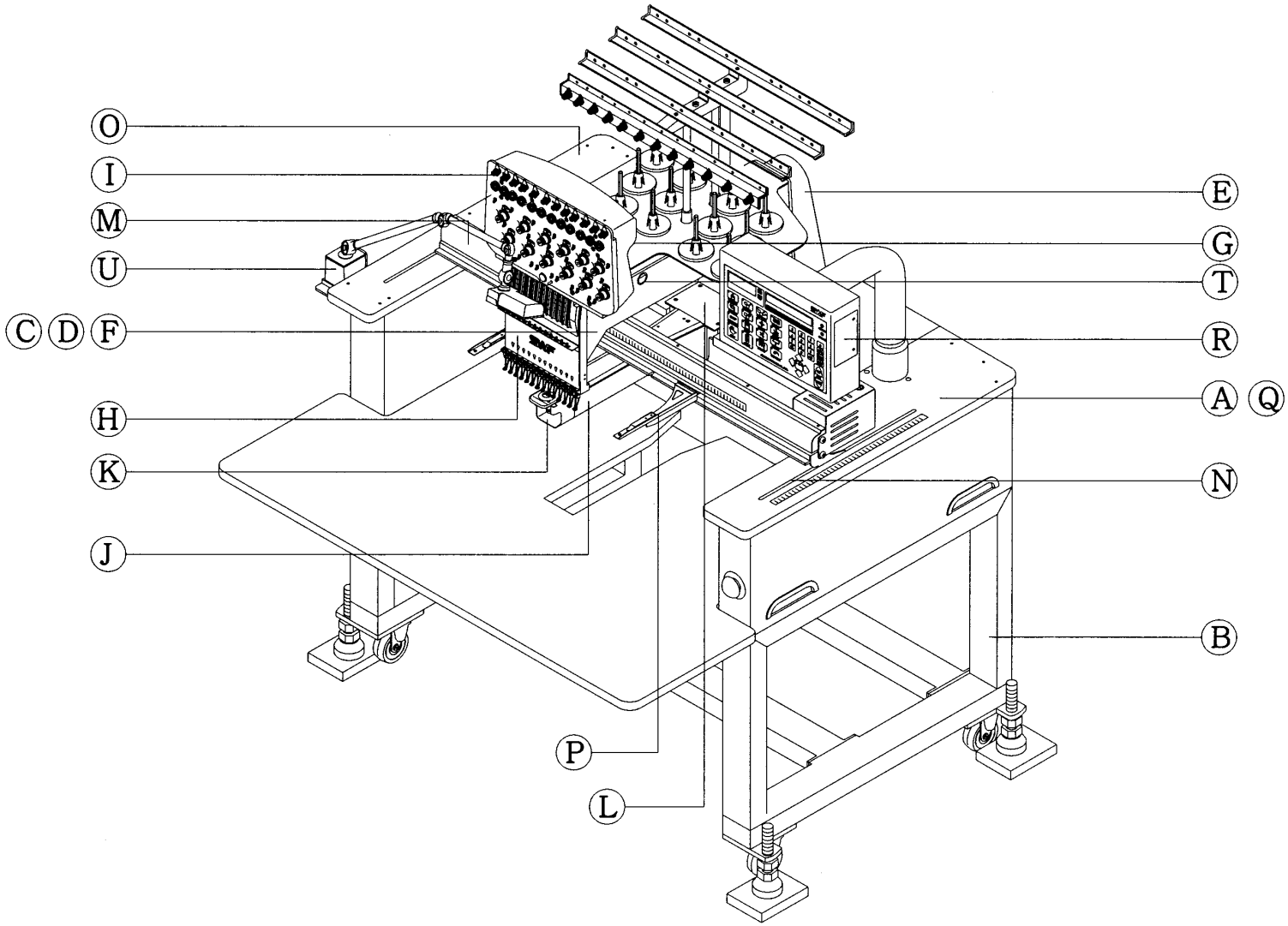

SWF®

CONTENT

A	Body & Table	7
B	Stand (Option)	9
C	Arm I	11
D	Arm II	13
E	Main Drive System	15
F	Wiper Set	17
G	Color Change Set	19
H	Head	21
I	Thread Tension Unit	23
J	Bed	25
K	Picker Set	27
L	Thread Cutting Set	29
M	X-Axis Drive Set	31
N	Y-Axis Drive Set	33
O	Spool Stand	35
P	Border & Tubular Frame	37
Q	Main Controller	39
R	Operation Unit	41
S	Bobbin Winder	43
T	Lubrication	45
U	Lamp (Option)	47

1. 조에 속한 파트는 개별 조립 시 제품의 파손 또는 재봉 불량이 발생될 수 있어 해당 파트에 대한 주문 시에는 조 품목으로만 구입이 가능합니다.
2. 본 책자는Parts Book으로 제작되었으므로 매뉴얼로 사용 불가합니다.

1. The parts classified as ass'y items may cause damage to the machine or bad sewing when they are separately assembled.
   Hence, when they are ordered, they can be purchased as ass'y items only.
2. This is a parts book. It cannot be used as a manual.

A

Body & Table

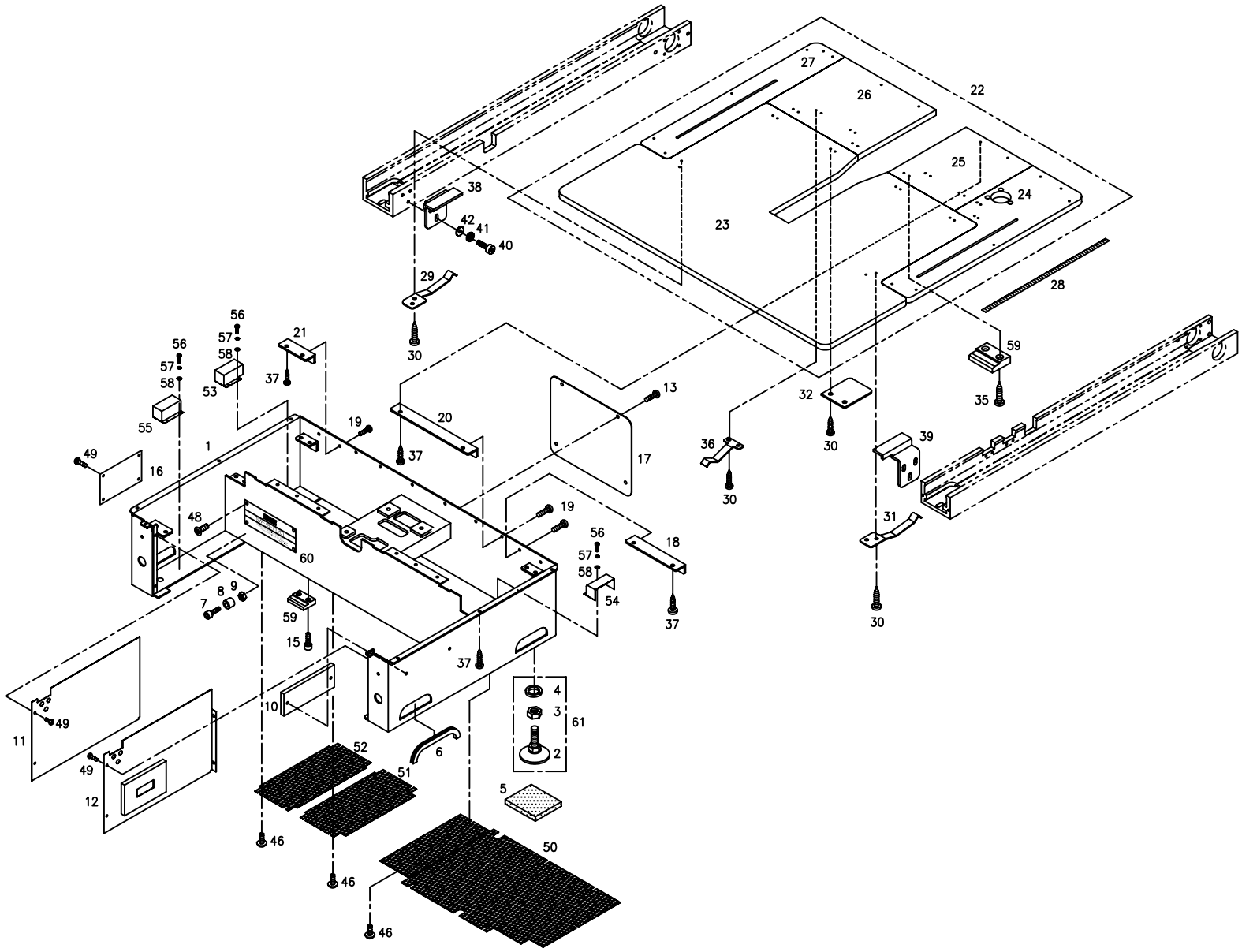
1
2
3
4
5
6
7
8
9
10
11
12
13
15
16
17
18
19
20
21
22
23
24
25
26
27
28
29
30
31
32
35
36
37
38
39
40
41
42
46
48
49
50
51
52
53
54
55
56
57
58
59
60
61

Ref.No	Part No.	Part Names		Q'ty
A-001	01001RW-T121	Body Set		1
A-002	01002SC-T121	Body Bolt Set		4
A-003	14033SN-8211	Hex.Nut	(M12)	4
A-004	14032SW-3115	SPRING WASHER (12@)		4
A-005	01017RB-T121	Rubber		4
A-006	01005RB-T121	Handle Support Rubber		4
A-007	05008SC-4113	Hex.Socket Bolt	(M4*L16)	4
A-008	01008RB-T121	Cover Support Rubber		4
A-009	05016SN-1211	Hex.Nut	(M4)	4
A-010	01019RB-T121	Switch Support Rubber		1
A-011	02023LA-T121	Body Side Cover(L)		1
A-012	02021LA-T121	Body Side Cover(R)		1
A-015	02015SC-7113	HEX.SOCKET BOLT(M4*L10)		8
A-016	02097ET-B001	Model Name Plate		1
A-017	02025LA-T121	Main Motor Cover		1
A-018	14014PR-T121	Table Holder Plate "C"		1
A-019	02031SC-7113	HEX. SOCKET SCREW(M5*L10)		8
A-020	14015PR-T121	Table Holder Plate "D"		2
A-021	14016PR-T121	Table Holder Plate "E"		1
A-022	14001BM-T121	Table Set		1
A-023	14001TA-T121	Table (A)		1
A-024	14008TA-T121	Table (B)		1
A-025	14010TA-T121	Table (D)		1
A-026	14011TA-T121	Table (E)		1
A-027	14009TA-T121	Table (C)		1
A-028	02017ET-T121	Scale Sticker (Y)		1
A-029	14004PR-T121	Table Support Plate (L)		1
A-030	19002SC-1330	Tapping Screw	(4*L16)	22
A-031	14006PR-T121	Table Support Plate (R)		1
A-032	14002PR-T121	Table Holder Plate "A"		4
A-035	17014SC-1330	Tapping Screw	(@4*L20)	8
A-036	17013PR-T121	Table Pressure Plate		4
A-037	15091SC-1330	Tapping Screw	(M5*L16)	16
A-038	17011PR-T121	Table Support (L)		1
A-039	17012PR-T121	Table Support (R)		1
A-040	05008SC-4113	Hex.Socket Bolt	(M4*L16)	6
A-041	02028SW-9115	Spring Washer	(@4)	6
A-042	02063SW-1111	Washer	(@4)	6
A-046	02044SC-3123	Truss Screw	(M5*L8)	18
A-048	09005SC-3123	Plus Screw	(M3*L6)	4

Ref. No	Part No.	Part Names	
A-049	02010SC-3123	Truss Screw	(M4*L8)
A-050	01001900T000	Wire Plate "A"	
A-051	01002000T000	Wire Plate "B"	
A-052	01002100T000	Wire Plate "C"	
A-053	12000100T000	HANDLE SUPPORT COVER (BL)	
A-054	12000200T000	HANDLE SUPPORT COVER (BR)	
A-055	12000300T000	Handle Support Cover (F)	
A-056	14014SC-7113	HEX.SOCKET SET SCREW(M5*L8)	
A-057	18048SW-3115	SPRING WASHER (5@)	
A-058	18049SW-3111	WASHER (@5)	
A-059	05001500T000	Table Hoder	
A-060	08000104T010	MODEL MARK (B-T1201)	
	08000105T010	MODEL MARK (B-T1501)	
A-061	01002BM-T121	BODY SUPPORT BOLT (SET)	

B

Stand (Option)

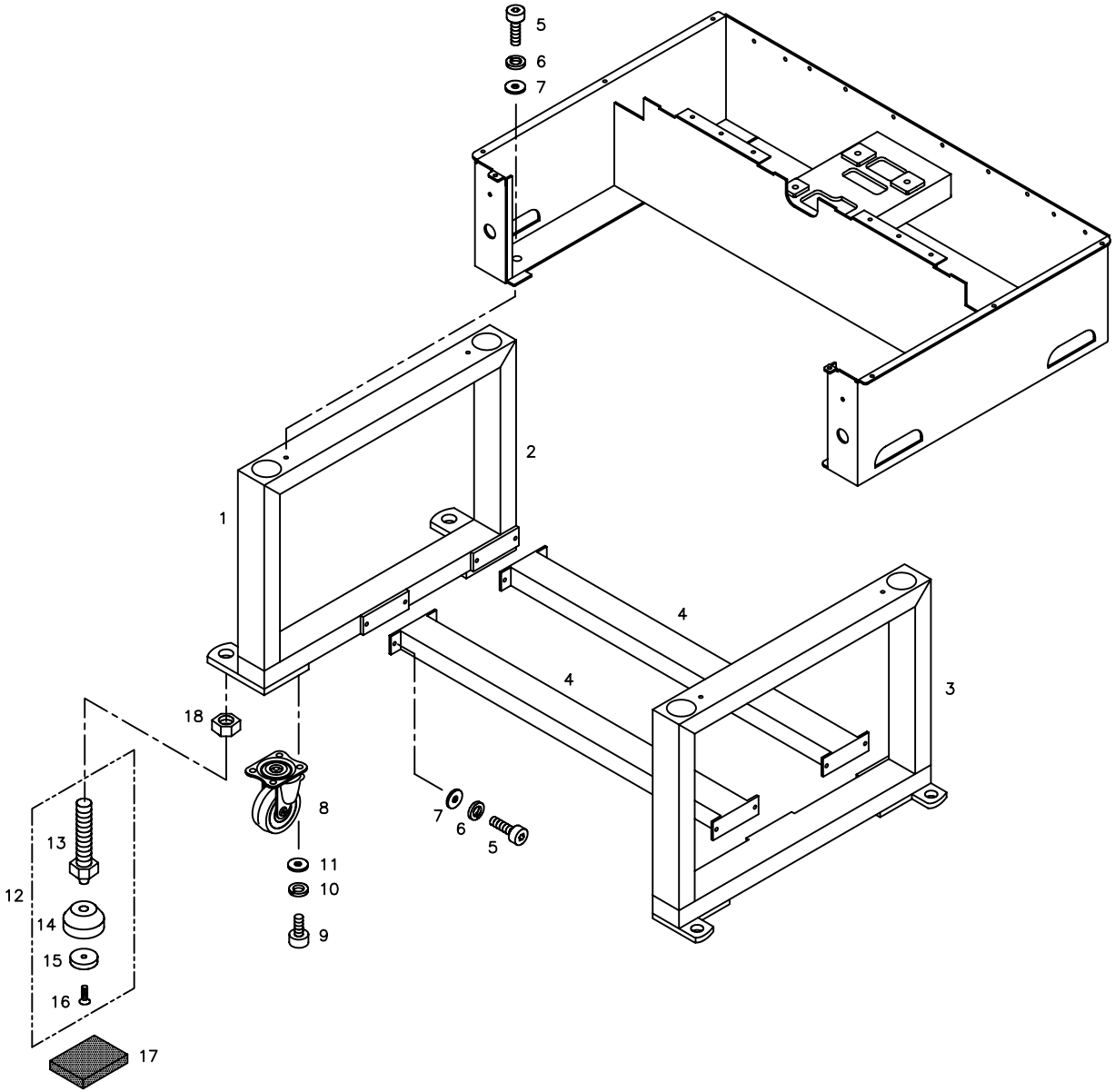

Ref. No	Part No.	Part Names	Q'ty
B-001	26001RW-T121	Stand (Set)	1
B-002		Stand (L)	1
B-003		Stand (R)	1
B-004		Stand Connecting Bracket	2
B-005	08087SC-7113	HEX. SOCKET BOLT (M8*L25)	12
B-006	15095SW-3115	SPRING WASHER (@8)	12
B-007	04029SW-A001	Washer (@8)	12
B-008	24007AF-T121	Caster	4
B-009	08035SC-4113	HEX. SOCKET BOLT (M6*L10)	16
B-010	16014SW-4115	Spring Washer (@6)	16
B-011	08057SW-1111	Washer (@6)	16
B-012	26012BM-T121	Bolt Set	4
B-013	26012SC-T121	Stand Support Bolt	4
B-014	26011CW-T121	Stand Support Base	4
B-015	26013CW-T121	Stand Support Washer	4
B-016	16022AF-8119	Plus Screw (M6*L20)	4
B-017	01017RB-T121	Rubber	4
B-018	02036SN-7211	HEX. NUT (M20-NO2)	4

Ref. No	Part No.	Part Names	Q'ty

C

Arm I

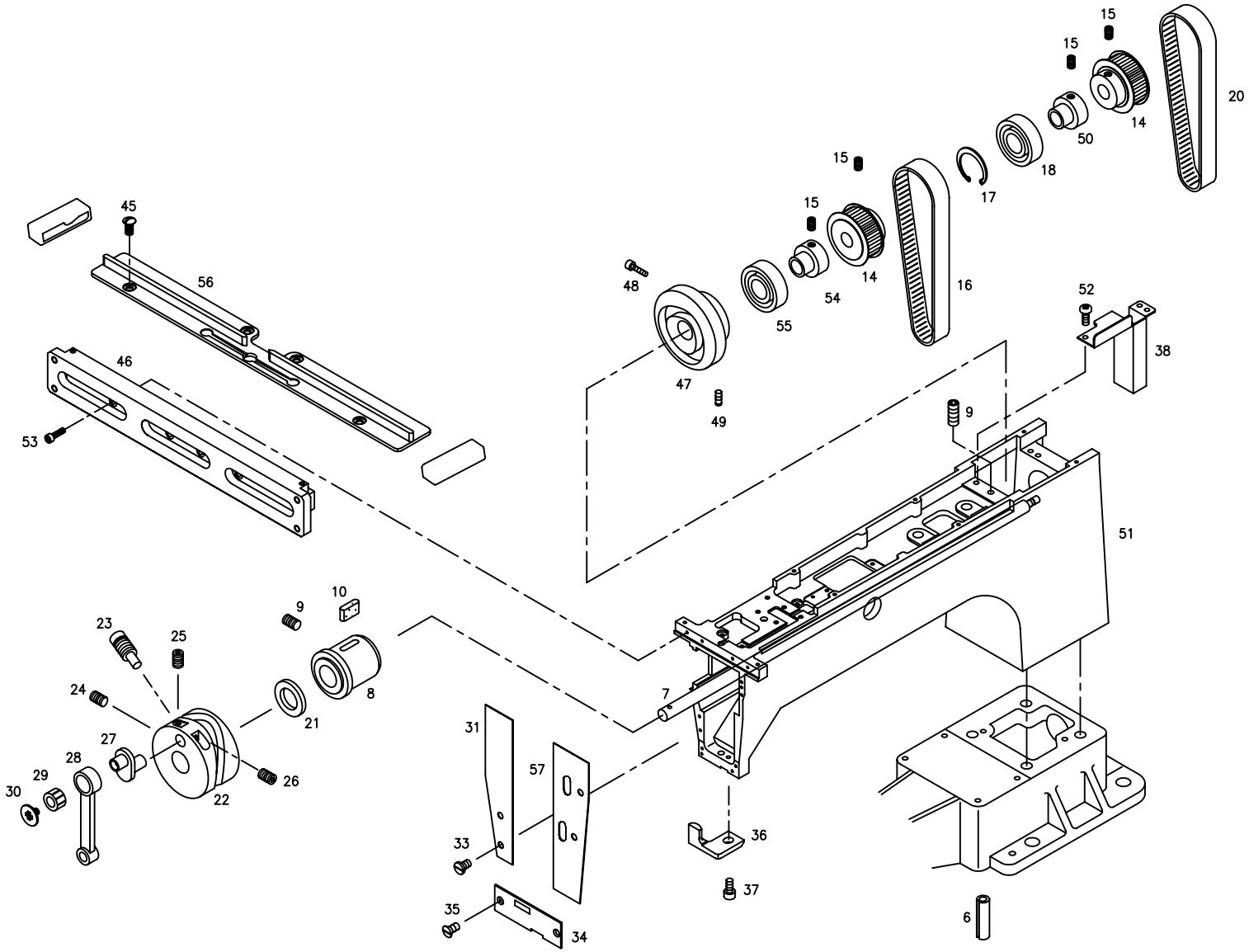
15
15
20
14
50
15
18
17
15
16
15
14
54
55
48
47
49
52
38
45
56
46
53
9
51
10
9
23
25
24
8
21
7
27
28
29
30
26
22
31
57
33
36
37
35
34
6

Ref. No	Part No.	Part Names		Q'ty
C-006	01008ET-T121	Spring Pin	(@6*L30)	2
C-007	01002SH-T121	Upper Shaft		1
C-008	01012MP-T121	Upper Shaft Bush (F)		1
C-009	03004SC-4517	Hex. Socket Set Screw	(15/64" N=28 L=14)	2
C-010	01014SF-T121	Felt		2
C-013	04016AF-A001	Hex. Socket Set Screw	(1/4" n=40 l=6)	2
C-014	01005PU-T121	Upper Shaft Timing Pulley		2
C-015	04012AF-A001	Hex. Socket Set Screw	(15/64" n=28 l=6)	10
C-016	05016SN-1211	Timing Belt		1
C-017	03010SR-4013	C-Ring	(@47)	1
C-018	03013BR-T121	Ball Bearing	(6204Zz)	1
C-020	01043BT-T121	Timing Belt		1
C-021	01015PR-T121	Washer		1
C-022	01016CM-T121	Take-Up Lever Driver Cam		1
C-023	01017CW-T121	Cam Screw	(9/32"N=28 L=17)	1
C-024	01018SC-4515	Cam Screw(A)	(15/64"N=28 L=7.5)	1
C-025	01019SC-4515	Hex. Socket Set Screw(A)	(1/4" N=40 L=4.5)	1
C-026	04016AF-A001	Hex. Socket Set Screw(B)	(1/4" N=40 L=6)	1
C-027	01020FH-T121	Needle Bar Crank		1
C-028	01021FH-T121	Crank Rod		1
C-029	01022BR-T121	Needle Bearing	(KT8128)	1
C-030	01023CW-T121	Crank Screw	(9/64" N=40)	1
C-031	01026PR-T121	Arm Front Cover (L)		1
C-033	03065SC-A001	Pront Cover Screw	(9/64" N=40)	4
C-034	01030PR-T121	Guide Plate		1
C-035	05062SC-A001	Guide Plate Screw	(9/64" N=40)	2
C-036	03056CL-B001	Head Rail Holder		1
C-037	03057SC-A001	Head Rail Holder Screw	(11/64" N=40)	1
C-038	03072PR-T121	Cable Guide		1
C-045	05041SC-A001	Guide Rail Screw	(9/64" N=40)	4
C-046	03068LM-T121	LM Guide Block Set	(12C)	1
	03069LM-T151	LM Guide Block Set	(15C)	
C-047	03073CM-CT01	Presser Foot Driver Cam		1
C-048	11029SC-4113	Hex. Socket Bolt	(M4*L20)	1
C-049	04012AF-A001	Hook Shaft Bush Screw	(15/64" N=28, L=6)	1
C-050	03000900T000	Bearing Collar		1
C-051	01000100T010	Arm,Bed		1
C-052	02010SC-3123	Truss Screw		3
C-053	03071SC-A001	Hex.Scoket Bolt	(M3*L15)	4
C-054	03000900T000	Bearing Collar		1

Ref. No	Part No.	Part Names		Q'ty
C-055	01029BR-A001	Ball Bearing	(6004Zz)	1
C-056	07023AD-CT12	Take-Up Guide Rail (L369)	(12C)	1
	07025AD-T151	Take-Up Guide Rail (L459)	(15C)	
C-057	04000100T000	ARM FRONT COVER (R)		1
C-058	07000100C000	T-UP GUIDE RAIL SIDE RUBBER L		1
C-059	07000200C000	T-UP GUIDE RAIL SIDE RUBBER R		1

D

Arm II

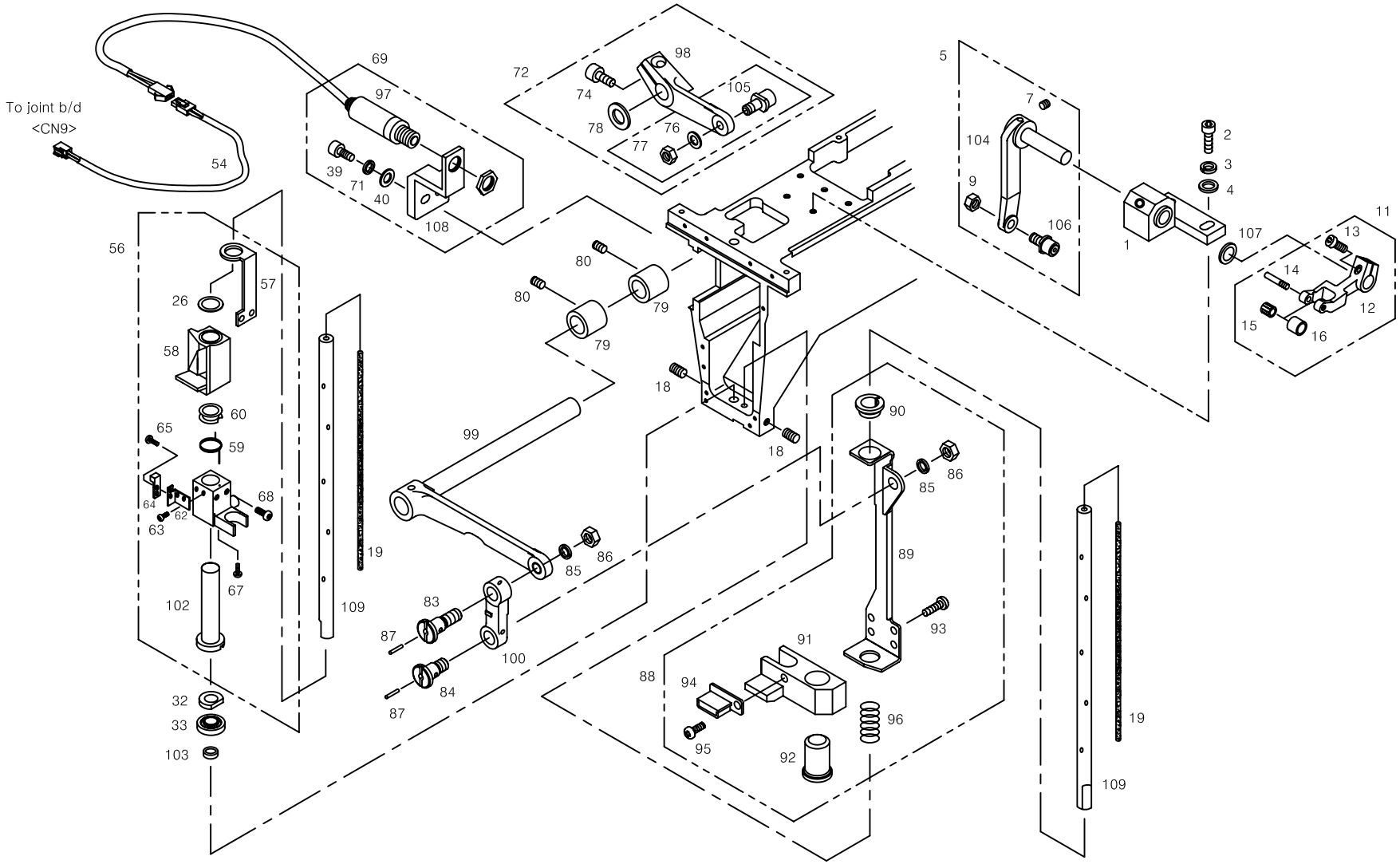
To joint b/d
<CN9>
54
69
97
39
71
40
108
72
74
98
105
78
76
77
5
7
104
9
106
2
3
4
1
107
11
13
14
12
15
16
56
57
26
58
60
59
65
64
62
63
68
67
102
32
33
103
109
19
80
79
18
99
85
86
83
87
84
100
90
89
91
93
88
94
95
96
92

Ref.No	Part No.	Part Names		Q'ty
D-001	04016CL-T121	Take-Up Driving Base Set		1
D-002	03016SC-4113	Hex. Socket Bolt	(M5*L15)	2
D-003	16018SW-1111	Spring Washer	(@5)	2
D-004	18048SW-3115	SPRING WASHER (5@)		2
D-005	04005BM-T121	Take-Up Driving Lever(A) Set		1
D-007	03022SC-4517	Hex. Socket Set Screw	(M4*L5)	1
D-009	12010SN-1211	HEX.NUT (M5)		1
D-011	04017BM-T121	Take-Up Driving Lever(B) Set		1
D-012	04017CA-T121	Take-Up Driving Lever(B)		1
D-013	07016SC-7113	HEX.SOCKET BOLT (M4*L12)		1
D-014	04019CW-T121	Pin Stud Screw		1
D-015	04021BR-T121	Neddle Bearing	(KT367N)	1
D-016	04020AF-T121	Roller		1
D-018	03020SC-A001	Hex.Socket Set Screw	(11/64" n=40)	2
D-026	03048SW-A001	Reciprocator Washer		1
D-032	03042SF-T121	Felt "A"		1
D-033	03051BR-A001	Ball Bearing	(689)	1
D-039	02015SC-7113	HEX.SOCKET BOLT(M4*L10)		2
D-040	06003SW-2111	Washer	(@4-S)	2
D-054	25025EL-T121	Cable	(1HT-25)	1
D-056	03040BM-CT01	Reciprocator Set		1
D-057	GP-044705-00	Driver Link Plate		1
D-058	03049PM-CT01	Needle Bar Reciprocator		1
D-059	03043SP-CT01	Jump Spring		1
D-060	03046CW-B001	Jump Spring Guide		1
D-061	GP-044791-00	Needlebar Driving Shaft Driver		1
D-062	03045PR-CT01	Reciprocator Stopper Bracket		1
D-063	03046SC-8118	Screw	(M2.6*L4)	2
D-064	03047PM-CT01	Reciprocator Stopper		1
D-065	03046SC-8118	Reciprocator Stopper Screw	(M2.6*L4)	2
D-067	03006MC-3123	TRUSS SCREW (M3*L6)		1
D-068	08006SC-8118	Driver Link Plate Screw	(M3*L5)	2
D-069	06000BM-CT01	Jumping Sol. Set		1
D-071	18014SW-3115	Spring Washer	(@4)	2
D-072	03076BM-CT01	Driving Lever(Small) Set		1
D-074	02015SC-7113	HEX.SOCKET BOLT(M4*L10)		1
D-076	18015SW-3111	Washer	(@4)	1
D-077	05016SN-1211	Hex.Nut	(M4)	1
D-078	02004BR-T121	Slide Washer		1
D-080	03022SC-4517	Hex. Socket Set Screw	(M4*L4)	2

Ref. No	Part No.	Part Names		Q'ty
D-083	SC-001606-00	Stud Screw A		1
D-084	SC-001607-00	Stud Screw B		1
D-085	18048SW-3115	SPRING WASHER (5@)		2
D-086	12010SN-1211	HEX.NUT (M5)		2
D-087	-	Wick		2
D-088	03090BM-CT01	Presser Foot Reciprocator Set		1
D-089	03090PR-CT01	Foot Reciprocator Bracket		1
D-090	03091PM-CT01	Foot Reciprocator Bracket B/S		1
D-091	03092AD-CT01	Presser Foot Reciprocator		1
D-092	03093CW-CT01	Presser Foot Reciprocator B/S		1
D-093	08006SC-8118	Plus Screw	(M3*L5)	4
D-094	03095RB-CT01	Presser Foot Stopper		1
D-095	08006SC-8118	Plus Screw	(M3*L5)	1
D-096	03099SP-CT01	Presser Foot Return Spring		1
D-097	11009EL-A000	Jumping Sol.		1
D-098	03007600C000	Presser Foot Driving Lever (S)		1
D-099	03008300C000	Presser Foot Driving Lever (L)		1
D-100	03008500C000	Foot Driving Connecting Link		1
D-101	03000800C000	Presser Foot Dirving Bush		2
D-102	03103900C000	Needle Bar Driving Shaft Bush		1
D-103	03004400A000	Ball Bearing Bush		1
D-104	04006CA-T121	Take-Up Driving Lever(A)		1
D-105	03078BR-CT01	Roller Bearing	(CFS4)	1
D-106	04010BR-CT01	Roller Bearing	(CFS4V)	1
D-107	02004BR-T121	Hook Shaft Bearing Washer		1
D-108	06000110TH00	JUMP SOL BRACKET		1
D-109	03204100A000	NEEDLE BAR DRIVING SHAFT		2

Main Drive System

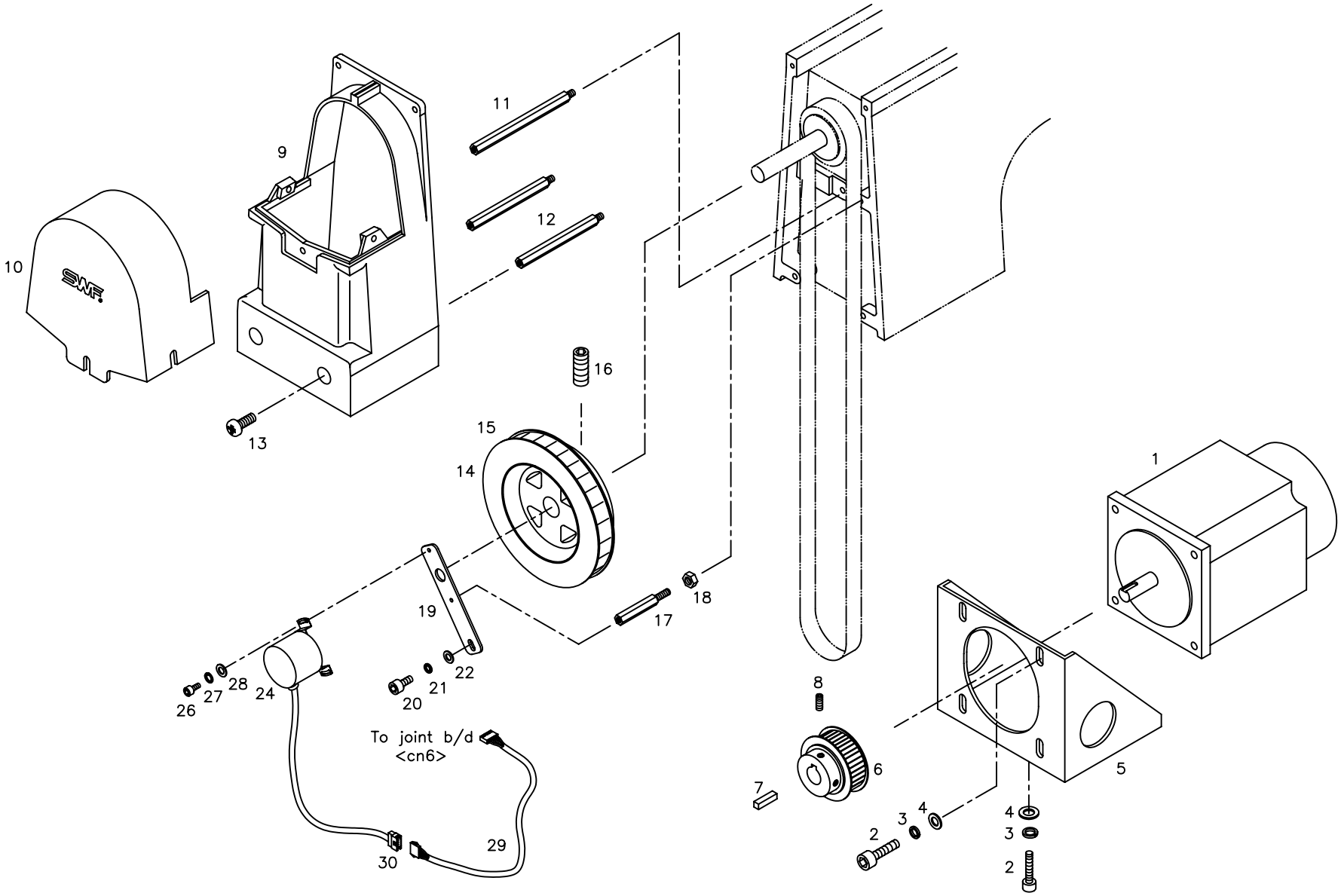

Ref.No	Part No.	PartNames		Q'ty
E-001	SWF-SM-14	Main Motor		1
E-002	08087SC-7113	HEX. SOCKET BOLT (M8*L25)		8
E-003	15095SW-3115	SPRING WASHER (@8)		8
E-004	15077SW-2111	Washer	(@8)	8
E-005	03005PR-T121	Main Motor Bracket		1
E-006	03009PU-T121	Main Motor Timing Pulley		1
E-007	14011ET-T121	Key		1
E-008	04012AF-A001	Hook Shaft Set Screw	(15/64-28)	2
E-009	02001PM-T121	Belt Cover (A)		1
E-010	02002PM-T121	Belt Cover (B)		1
E-011	02004CW-T121	Belt Cover Stud Bolt (B)	(M5*L114)	1
E-012	02003CW-T121	Belt Cover Stud Bolt(A)	(M5*L98)	2
E-013	18153SC-3123	Plus Screw	(M4*L10)	7
E-014	GP-038115-01	Hand Pulley		1
E-015	03030ET-T121	Sticker		1
E-016	14044SC-4517	Hex.Socket Set Screw	(M8*L10)	2
E-017	03033CW-T121	Encoder Stud Bolt		1
E-018	12010SN-1211	HEX.NUT (M5)		1
E-019	03014PR-T121	Encoder Bracket		1
E-020	02015SC-7113	HEX.SOCKET BOLT(M4*L10)		1
E-021	02028SW-9115	Spring Washer	(@4)	1
E-022	06003SW-2111	Washer	(@4)	1
E-024	03013EL-T121	Encoder		1
E-026	02015SC-7113	HEX.SOCKET BOLT(M4*L10)		2
E-027	02028SW-9115	Spring Washer		2
E-028	06003SW-2111	Washer		2
E-029	25031EL-T121	Encoder Cable	(1HT-31)	1
E-030	25103ET-B001	Encoder Connector		1

Ref. No	Part No.	Part Names	Q'ty

F

Wiper Set

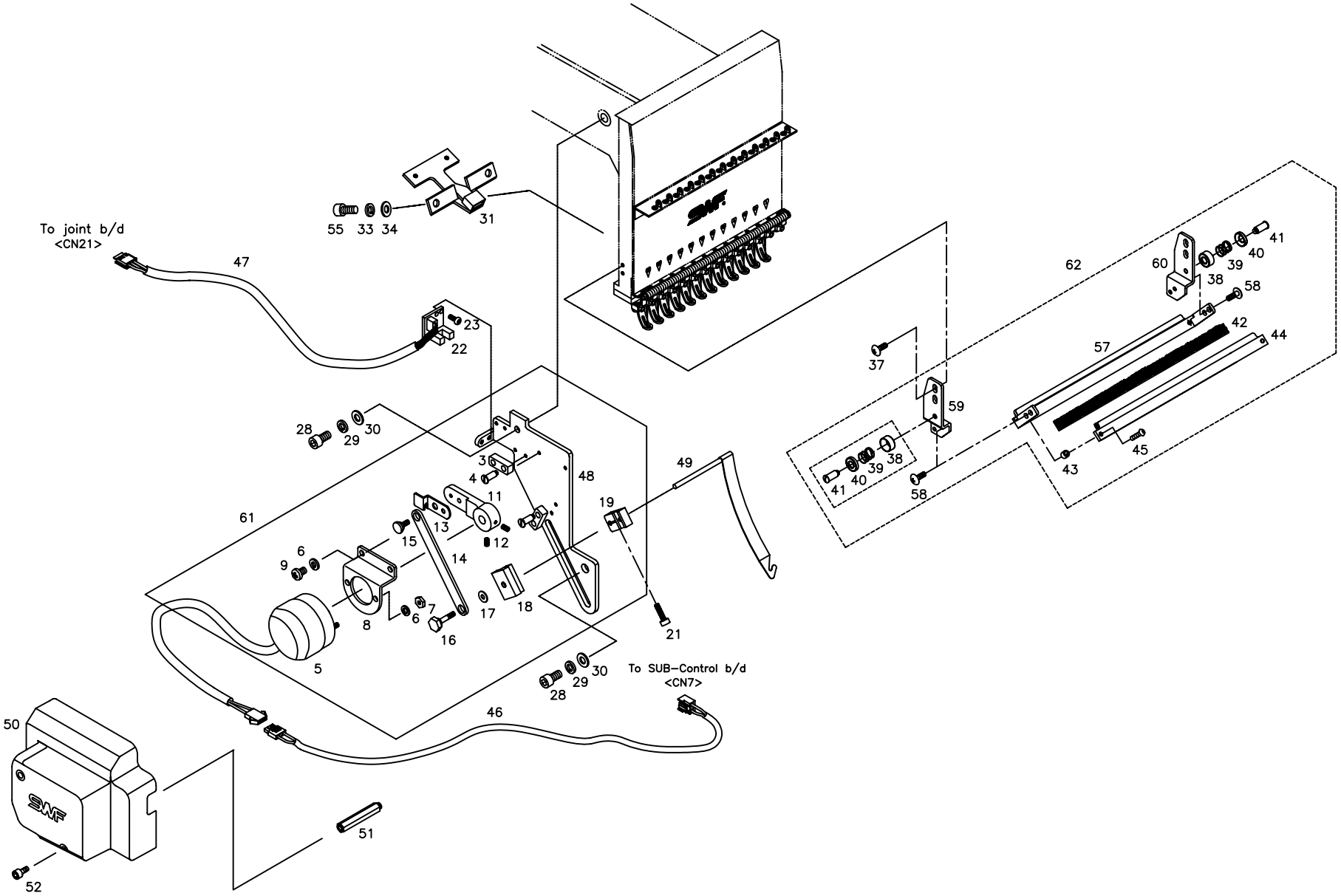

Ref.No	Part No.	Part Names		Q'ty
F-003	09021RB-A001	Cushion Stopper		2
F-004	09033CW-CT01	STOPER SCREW		4
F-005	09012EL-A001	Upper Thread Catcher Sol. Set		1
F-006	02028SW-9115	Spring Washer	(@4)	4
F-007	02029SN-9311	Hex. Nut	(M4-No3)	2
F-008	09015PR-A001	Sol. Base		1
F-009	09018SC-8118	Plus Screw	(M4*L6)	2
F-011	09015CA-T121	Sol. Connecting Lever		1
F-012	05016SN-1211	Hex. Socket Set Screw	(M4*L5)	2
F-013	09014PR-T121	Sensor Plate		1
F-014	09012PR-T121	Driving Link		1
F-015	09013CW-T121	Driving Link Stud Screw		1
F-016	09010CW-T121	Stud Screw		1
F-017	09009PR-T121	Positioning Collar Washer		1
F-018	09008PM-T121	Positioning Collar		1
F-019	09006AD-T121	Positioning Collar Bracket		1
F-021	09007SC-7113	HEX. SOCKET BOLT (M3*L12)		1
F-022	09017EL-T121	Sensor Set		1
F-023	08006SC-8118	Plus Screw	(M3*L5)	2
F-028	08076SC-7113	HEX. SOCKET BOLT (M5*L12)		2
F-029	18048SW-3115	SPRING WASHER (5@)		2
F-030	18049SW-3111	WASHER (@5)		2
F-031	09046PR-T121	Upper Thread Catcher Guide Set		1
F-033	18014SW-3115	Spring Washer	(@4)	2
F-034	18015SW-3111	Washer	(@4)	2
F-037	02009SC-A001	Bass Screw		4
F-038	09044PR-A001	Upper Thread Holder Disk "A"		2
F-039		Spring		
F-040		Upper Thread Holder Disk "B"		
F-041		Upper Thread Holder Stud		
F-042	09027ET-AB00	Velcro	(12C)	2
	09027ET-T151	Velcro	(15C)	2
F-043	09038CW-A001	Thread Presser Space		2
F-044	09029PR-AB00	Presser Base Cover	(12C)	1
	09029PR-T151	Presser Base Cover	(15C)	1
F-045	07018SC-8118	Plus Screw	(M3*L8)	2
F-046	25023EL-T121	Sol.Con To Joint B/D	(1HT-23)	1
F-047	25054EL-T121	Return Sensor Cable	(1HT-54)	1
F-048	09001PR-T121	Upper Thread Catcher Base		1
F-049	09005PR-CT01	Upper Thread Catcher		1

Ref. No	Part No.	Part Names		Q'ty
F-050	09035PM-CT01	Upper Thread Catcher Cover		1
F-051	09036CW-CT01	Wiper Cover Stud Bolt		2
F-052	02023SC-7113	HEX.SOCKET BOLT (M4*L8)		2
F-055	04010MC-7113	Hex.Socket Bolt	(M4*L10)	2
F-057	09026PR-AB00	Upper Thread Presser Base	(12C)	1
	09052PR-T151	Upper Thread Presser Base	(15C)	
F-058	06010SC-8118	Plus Screw	(M3*L4)	4
F-059	09040PR-A001	Bracket (L)		1
F-060	09041PR-A001	Bracket (R)		1
F-061	08500000T000	Upper Thread Catcher Set		1
F-062	08600004B000	Upper Thread Base Set	(12C)	1
	08600005B000	Upper Thread Base Set	(15C)	

G

Color Change Set

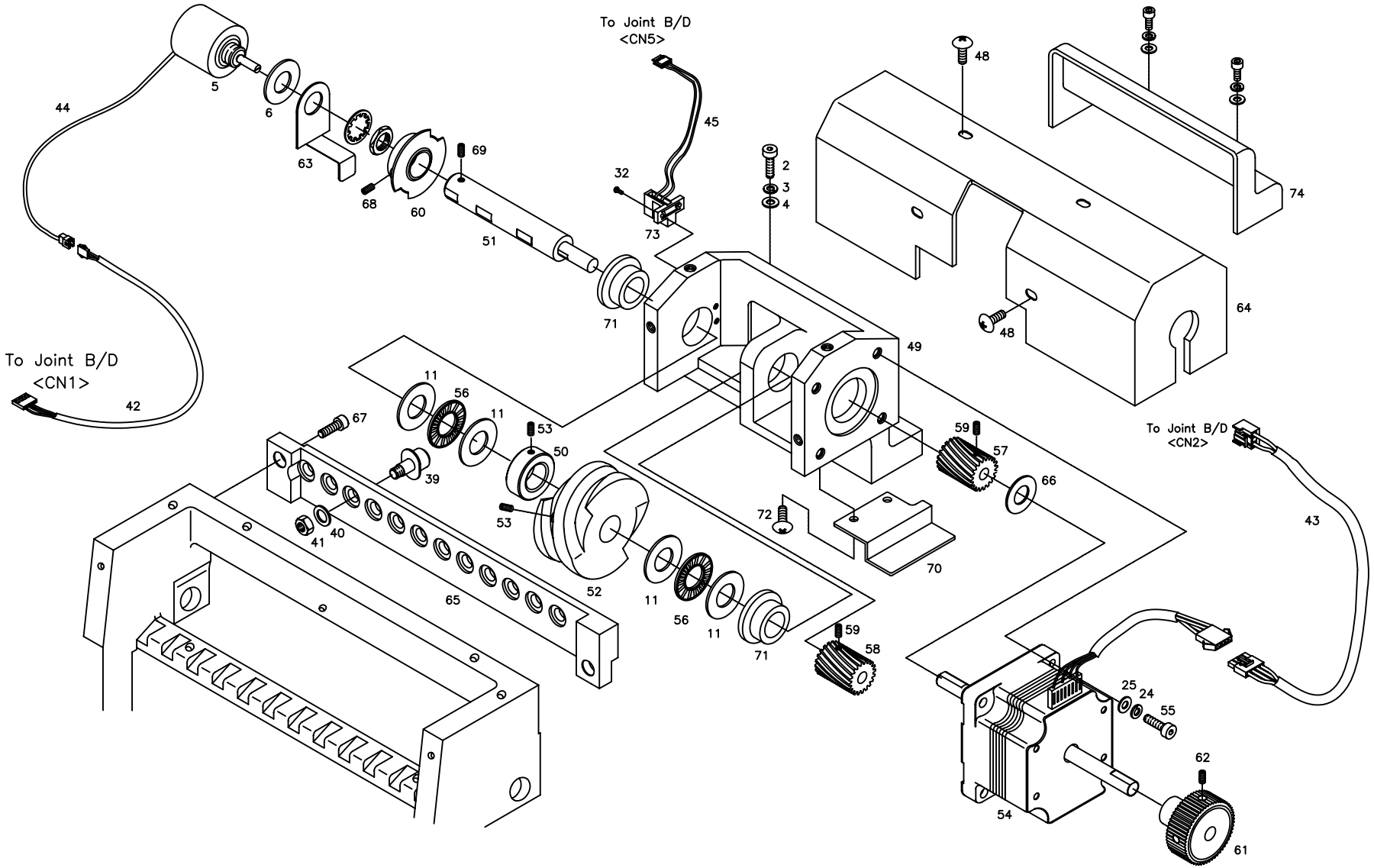

Ref.No	Part No.	Part Names		Q'ty
G-002	03016SC-4113	Hex. Socket Bolt	(M5*L15)	2
G-003	18048SW-3115	SPRING WASHER (5@)		2
G-004	16018SW-1111	Washer	(@5)	2
G-005	15012MT-T121	Potentiometer	(7824 R1K L25)	1
G-006	15014PR-T121	Potentiometer Washer		1
G-011	13010BR-T121	Thrust Washer		4
G-024	18014SW-3115	Spring Washer	(@4)	4
G-025	18015SW-3111	Washer	(@4)	4
G-032	05016SN-1211	Plus Screw	(M3*L5)	2
G-039	15029AF-T121	Roller Set		
G-040	18048SW-3115	SPRING WASHER (5@)		12
G-041	12010SN-1211	HEX.NUT (M5)		12
G-042	25033EL-T121	Potention To Joint B/D	(1HT-33)	1
G-043	25029EL-T121	C/C Motor Cable	(1HT-29)	1
G-044	25034EL-T121	C/C Potention Cable	(1HT-34)	1
G-045	25035EL-T121	Half Turn Cable	(1HT-35)	1
G-048	02010SC-3123	Truss Screw	(M4*L8)	2
G-049	GP-011302-01	Color Change Base		1
G-050	08101100T010	Color Change Collar		1
G-051	08100700T010	Color Change Shaft		1
G-052	13005CM-UK06	Color Change Cam		1
G-053	04012AF-A001	Hook Shaft Bush Screw	(15/64-28)	5
G-054	08101600T010	Color Change Motor	(103H7121-2411)	1
G-055	05008SC-4113	Hex.Socket Bolt	(M4*L16)	4
G-056	13041BR-UK01	Thrust Bearing		2
G-057	08105000T010	Color Change Gear (L)		1
G-058	08104900T010	Color Change Gear (R)		1
G-059	08113SC-A001	Collar Screw		4
G-060	13032AD-UK06	Color Change Film Set		1
G-061	08102300T010	Color Change Passivity Handle		1
G-062	04012AF-A001	Hook Shaft Bush Screw	(15/64" n=28)	2
G-063	13015PR-UK06	Potentiometer Bracket		1
G-064	08102900T010	Color Change Cover		1
G-065	13026CL-UK06	Color Change Roller Base	(12C)	1
G-066	08102000T010	Motor Washer		1
G-067	08076SC-7113	HEX. SOCKET BOLT (M5*L12)		2
G-068	04014SC-4517	Hex.Socket Set Screw	(M5*L5)	2
G-069	08113SC-A001	Collar Screw	(11/64,L6)	1
G-070	08103600T010	Motor Blind		1
G-071	GP-006252-00	Color Change Bushing		2

Ref. No	Part No.	Part Names		Q'ty
G-072	02010SC-3123	Truss Screw	(M4*L8)	2
G-073	08102300B000	Half Turn Sensor	(GP1S51V)	1
G-074	08103800C010	COLOR CHANGE COVER B		1

H

Head

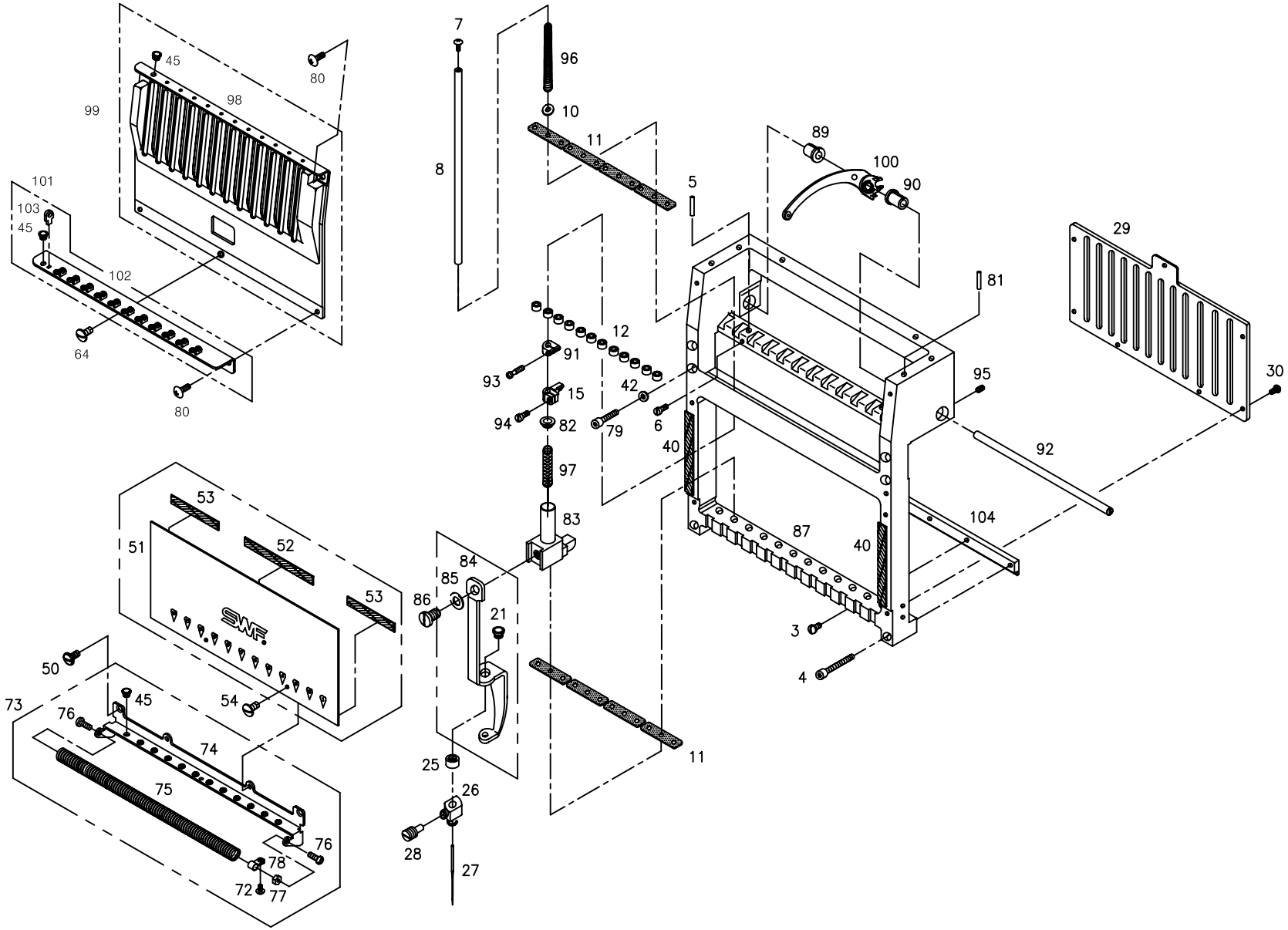
45
80
98
99
101
103
45
102
64
80
7
8
96
10
11
89
100
90
5
29
81
12
91
93
15
42
95
30
94
82
79
6
40
92
97
83
53
51
52
53
87
40
104
84
85
86
21
3
4
50
73
76
45
54
74
75
25
26
11
76
78
28
27
72
77

Ref.No	Part No.	Part Names		Q'ty
H-003	05013SC-A001	Head Rail Screw		3
H-004	05014SC-7113	HEX. SOCKET BOLT (M4*L25)		2
H-005	05015CW-A001	Head Positooning Pin		2
H-006	03022SC-4517	Pin Screw	(M4*L5)	2
H-007	05019SC-A001	Needle Bar Cover Screw	(M5*L6)	12
H-008	05018CW-A001	NEEDLE BAR		12
H-010	05022SW-A001	Needle Bar Felt Washer		12
H-011	05021SF-A001	Felt		8
H-012	05016SN-1211	Needle Bar Cushion Rubber		12
H-015	GP-044776-00	Needle Bar Holder		12
H-021	05031AF-A001	Presser Foot Guide Bush		12
H-025	05035RB-A001	Presser Foot Cushion Rubber"A		12
H-026	05036AF-A001	Needle Fixed Holder		12
H-027	05037DB-A001	Needle		12
H-028	05363SC-A001	Needle Fixed Screw (A/S)		12
H-029	05027PM-T121	Needle Bar Guide Rail	(12C)	1
	05027PM-T151	Needle Bar Guide Rail	(15C)	
H-030	05041SC-A001	Guide Rail SCrew		9
H-040	05063RB-A001	Magnetic Rubber "A"		2
H-042	05009SW-1111	Washer	(@4-S)	4
H-045	05452CM-A001	Eyelet "A"		36
H-050	05062SC-A001	Thread Guide (L) Screw		2
H-051	05641PR-AB00	Gead Face Plate (L)	(12C)	1
	05641PR-T151	Gead Face Plate (L)	(15C)	
H-052	05642RB-A001	Magnetic Rubber "B"		1
H-053	05643RB-AB00	Magnetie Rubber "C"		2
H-054	05062SC-A001	Thread Guide (L) Screw	(12C)	2
	05062SC-A001	Thread Guide (L) Screw	(15C)	3
H-064	05062SC-A001	Thread Guide (M) Screw	(12C)	1
	05062SC-A001	Thread Guide (M) Screw	(15C)	2
H-072	05060SC-8118	Spring Holder Screw (M3*L4)	(12C)	1
	05060SC-8118	Spring Holder Screw (M3*L4)	(15C)	2
H-073	10400004B000	Thread Guide (L)Set (New)	(12C)	1
	10400005T000	Thread Guide (L)Set (New)	(15C)	
H-074	10400104B000	Thread Guide (L) (New)	(12C)	1
	10400105T000	Thread Guide (L) (New)	(15C)	
H-075	10400204B000	Thread Hook Spring	(12C)	1
	10400205T000	Thread Hook Spring	(15C)	
H-076	096440C-8119	Spring Adjusting Screw	(9/64,N40,L11.8)	2
H-077	096440N-3211	Spring Adjusting Nut	(9/64-40)	1

Ref. No	Part No.	Part Names		Q'ty
H-078	10400304B000	Spring Holder	(12C)	1
	10400304B000	Spring Holder	(15C)	2
H-079	05008SC-4113	Hex.Socket Bolt	(M4*L16)	4
H-080	05070SC-3123	Head Face Plate (E) Screw	(9/64,N40,L10)	4
H-081	01303700H000	Tension Plate Pin		2
H-082	05021PM-H001	Presser Foot Spring Guide		12
H-083	05023PM-H001	Presser Foot Holder Set		12
H-084	05024PR-CT01	Presser Foot		12
H-085	05027PR-H001	Washer		12
H-086	05026SC-H001	Presser Foot Holder Screw		12
H-087	GP-023229-00	Head	(12C)	1
	GP-023232-00	Head	(15C)	
H-089	08203000A000	Take-Up Lever Shaft Bush(L)		1
H-090	08200800A000	Take-Up Lever Shaft Bush(R)		1
H-091	11101200T000	Upper Dead Point Stopper		12
H-092	08200404A000	Take-Up Lever Shaft		1
H-093	05026SC-4113	Stopper Screw		12
H-094	05028SC-4113	Holder Screw		12
H-095	07009SC-4517	Hex.Socket Set Screw	(M5*L6)	2
H-096	05008AF-T121	Needle Bar Return Spring		12
H-097	05017AF-T121	Presser Foot Pressure Spring		12
H-098	10200104B000	Head Face Plate (U)	(12C)	1
	10200105B000	Head Face Plate (U)	(15C)	
H-099	05045BM-T151	Thread Guide (U) Set	(12C)	1
	10200004B000	Thread Guide (U) Set	(15C)	
H-100	07005BM-B002	TAKE-UP LEVER SET		12
H-101	10300004A000	Thread Guide (M) Set	(12C)	1
	10300005A000	Thread Guide (M) Set	(15C)	
H-102	10300114A000	Thread Guide (M)	(12C)	1
	10300115A000	Thread Guide (M)	(15C)	
H-103	10110000A000	Eyelet "B"	(12C)	12
	10110000A000	Eyelet "B"	(15C)	15
H-104	08201304H000	Head Rail	(12C)	1
	08201305H000	Head Rail	(15C)	

I Thread Tension Unit

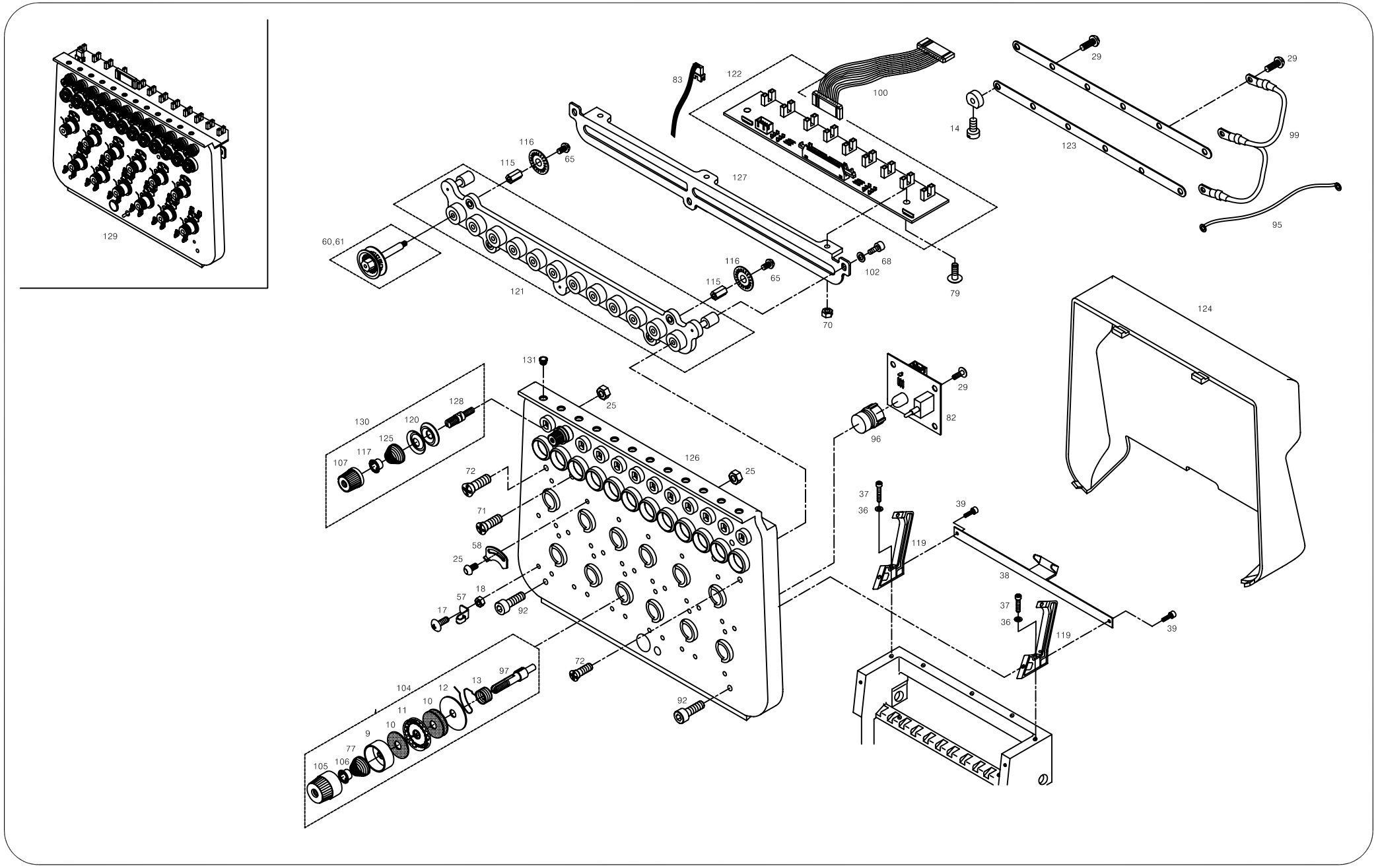

Ref. No	Part No.	Part Names		Q'ty
I-009	11086PM-A001	Tension Spring Collar		12
I-010	11084AF-A001	Felt		24
I-011	11085AF-A001	Rotary Tension Disc		12
I-012	11083PM-A001	Disc Plate		12
I-013	11082AF-A001	THREAD TAKE-UP SPRING		12
I-015	11009SC-A001	Stud Screw		12
I-017	09005SC-3123	Plus Screw	(M3*L6)	24
I-018	11014SN-1211	Hex.Nut	(M3-No2)	24
I-025	05016SN-1211	Hex. Nut		12
I-027	09005SC-3123	Plus Screw	(M3*L6)	12
I-029	09005SC-3123	Plus Screw	(M3*L6)	12
I-036	05009SW-1111	Washer	(@4)	2
I-037	11029SC-4113	Hex. Socket Bolt	(M4*L20)	2
I-038	11032PR-T121	Cable Supporter	(12C)	1
	11032PR-T151	Cable Supporter	(15C)	1
I-039	02010AF-3123	Hex.Socket Screw	(M4*L8)	2
I-057	11012PR-B001	Thread Guide (New)	(12C)	24
	11012PR-B001	Thread Guide (New)	(15C)	30
I-058	11009PR-B001	Thread Breakage Detecting Plat		12
I-060	11075PM-B001	Thread Sensor Roller(B1/Long)	(12C)	12
	11075PM-B001	Thread Sensor Roller(B1/Long)	(15C)	7
I-061	11076PM-B001	Thread Sensor Roller(B2/Short)	(15C)	8
I-065	08011SC-8118	Screw	(M2*L4)	12
I-068	02023SC-7113	Hex.Socket Screw	(M4*L8)	3
I-070	05016SN-1211	Hex.Nut	(M4)	3
I-071	15089SC-7119	C.S SCREW (M4*L10)		2
I-072	02002SC-7119	PLUSS SCREW (M4*L8)		5
I-077	11087SP-B001	Tension Adjusting Spring		12
I-079	02010SC-3123	Truss Screw	(M4*L8)	3
I-082	03-0000-EMB1	Head On/Off S/W Board	(12C)	1
	02-0000-EMB1	Head On/Off S/W Board	(15C)	
I-083	02101800B000	Wheel Sensor B/D to S/W Board		1
I-092	04010MC-7113	Hex.Socket Bolt	(M4*L10)	2
I-095	25126EL-B001	Sensor Board To Wheel Earth		1
I-096	08300400A000	Lamp Cover		1
I-097	11081CW-A001	Thread Tension Adjusting Stud		12
I-099	02103903H000	Earth Cable	(12C)	1
	25124EL-B001	Earth Cable	(15C)	
I-100	02102200U000	Wheel Sensor B/D To Adjusting Plate		1
I-102	06003SW-2111	Washer	(@4)	3

Ref. No	Part No.	Part Names		Q'ty
I-104	08310000B000	TENSION ADJUSTING SET		12
I-105	08300500A000	TENSION ADJUSTING NUT		12
I-106	08300700A000	TENSION SPRING STOPPER		12
I-107	08300600A000	SUB TENSION ADJUSTING NUT(A)		12
I-115	08308300B000	THREAD DETECTING WHEEL STUD	(12C)	12
	11083CW-B001	THREAD DETECTING WHEEL STUD	(15C)	15
I-116	GP-005179-00	THREAD BREAKAGE DETECTING WHEEL		12
I-117	11088PM-A001	TENSION SPRING STOPPER		12
I-119	08202000I000	TENSION ADJUSTING PLATE HOLDER	(12C)	2
	11020PM-B001	TENSION ADJUSTING PLATE HOLDER	(15C)	
I-120	08301200I000	TENSION DISC		24
I-121	08300704I000	ROLLER BASE	(12C)	1
	08300705I000	ROLLER BASE	(15C)	
I-122	20009EL-WH12	WHEEL SENSOR BOARD	(12C)	1
	20009EL-WH15	WHEEL SENSOR BOARD	(15C)	
I-123	08300304I000	CONNECTION PLATE	(12C)	2
	08300305I000	CONNECTION PLATE "A"	(15C)	1
	08300405I000	CONNECTION PLATE "B"	(15C)	1
I-124	08000804I000	TENSION PLATE COVER	(12C)	1
	08000805I000	TENSION PLATE COVER	(15C)	
I-125	08301100I000	TENSION SPRING		12
I-126	08300104I000	TENSION UNIT PLATE	(12C)	1
	08300105I000	TENSION UNIT PLATE	(15C)	
I-127	08300204I000	BOARD BASE	(12C)	1
	08300205I000	BOARD BASE	(15C)	
I-128	08301000I000	TENSION ADJUSTING STUD		12
I-129	08300004I000	TENSINO UNIT SET	(12C)	1
	08300005I000	TENSINO UNIT SET	(15C)	
I-130	08320000I000	SUB TENSION ADJUSTING SET		12
I-131	05452CM-A001	EYELET "A"		12

J

Bed

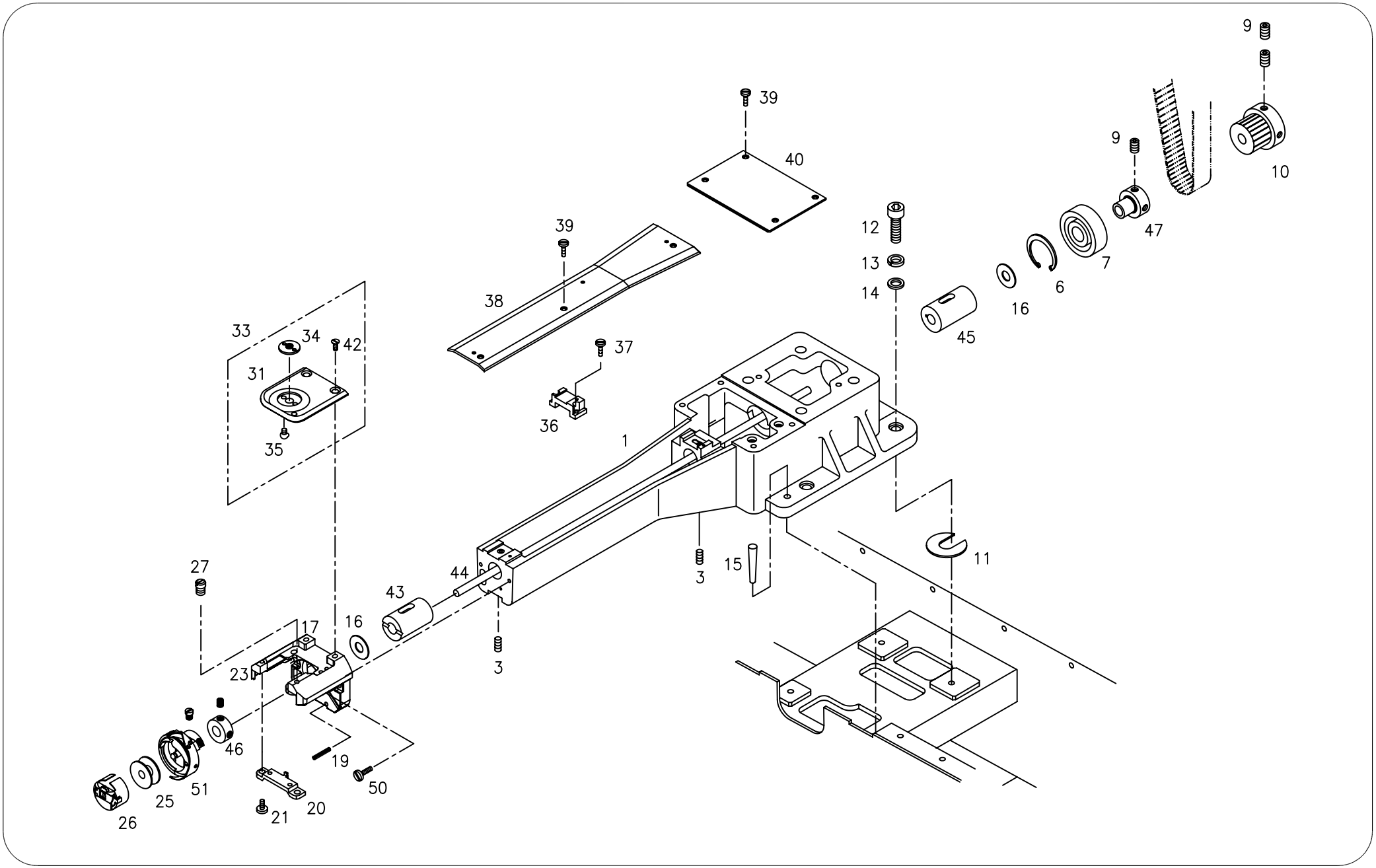
9
39
40
9
10
12
47
39
13
7
14
6
16
38
45
33
34
42
37
31
36
35
1
27
44
43
15
11
3
17
16
23
3
46
19
50
51
25
21
20
26

Ref.No	Part No.	Part Names		Q'ty
J-001	01001CS-T121	Bed		1
J-003	01018SC-4515	HookShaftBushScrew	(15/64"N=28 L=7.5)	2
J-006	04012SR-4013	C-Ring	(@32)	1
J-007	02015BR-T121	BellBearing	(6201Zz)	1
J-009	04012AF-A001	Hex.SocketSetScrew	(15/64"N=28 L=6)	6
J-010	02018PU-T121	HookShaftTimingPulley		1
J-011	02032PR-T121	Spacer	(T=0.05,0.2,0.5)	각 1EA
J-012	03002SC-4113	Hex.SocketBolt	(M8*L32)	4
J-013	15095SW-3115	SPRING WASHER (@8)		4
J-014	04029SW-A001	Washer	(@8)	4
J-015	01008ET-T121	Pin	(@7)	2
J-016	02004BR-T121	HookShaftBearingWasher	(@8)	2
J-017	GP-005327-01	NeedlePlateBracket		1
J-019	02009PI-T121	SpringPin	(@3)	2
J-020	GP-005358-01	RotaryHookSupport		1
J-021	02011SC-3125	RotaryHookSupportScrew	(9/64"N=40 L=5.5)	2
J-023	08113SC-A001	CollarScrew	(11/64"N=40 L=5)	2
J-025	04035AF-A001	Bobbin		1
J-026	04034AF-A001	BobbinCaseSet		1
J-027	04026SC-T121	NeedlePlatePin		1
J-031	02019PR-T121	NeedlePlateSet(Cap)	(Option)	1
J-033	02019BM-T121	NeedlePlate(Cap)		1
J-034	02021CW-T121	NeedleGuidePlate(Cap)		1
J-035	02022SC-T121	NEEDLEGUIDEPLATESCREW		2
J-036	02029AD-T121	BedCoverSupport		1
J-037	02028SC-4125	BedCoverSupportScrew	(9/64" n=40 L=10)	2
J-038	02026PR-T121	BedCover(F)		1
J-039	02030SC-T121	BedCoverScrew	(9/64" n=40 L=6)	7
J-040	02027PR-T121	BedCover(R)		1
J-042	04004AF-A001	NeedlePlateScrew		2
J-043	GP-016931-00	HookShaftFrontBushing		1
J-044	02000200T000	HookShaft		1
J-045	02001000T000	HookShaftBush(M)		1
J-046	03707300A000	SolenoidCollar		1
J-047	02001600T000	BearingCollar		1
J-050	04037SC-A001	PickerBracketScrew	(9/64" n=40 L=12)	2
J-051	04033AF-D002	ROTARY HOOK SET		1

Ref. No	Part No.	Part Names	Q'ty

K

Picker Set

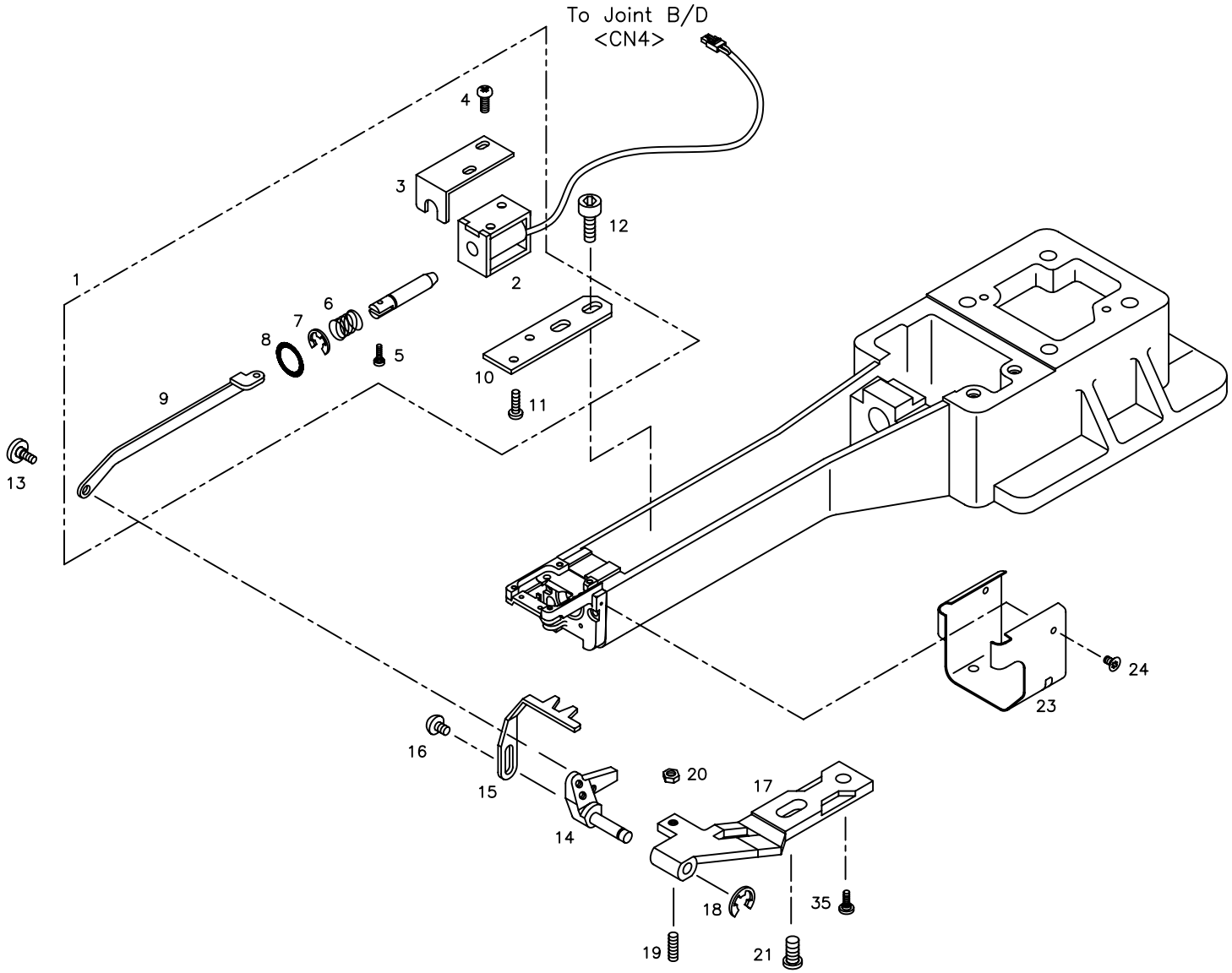
To Joint B/D
<CN4>
1
2
3
4
5
6
7
8
9
10
11
12
13
14
15
16
17
18
19
20
21
23
24
35

Ref. No	Part No.	Part Names	Q'ty
K-001	10009EL-A000	Picker Sol. Set	1
K-002	10009EL-T121	Picker Sol.	1
K-003	01-012A-AT10	Picker Sol. Cover	1
K-004	06010AF-8118	Plus Screw (M3*L4)	1
K-005	10021SC-A001	Sol. Stud Screw	1
K-006	10011SP-A001	Sol. Spring	1
K-007	13044SR-4013	E-Ring (@4)	2
K-008	10012RB-A001	Cushion Washer	2
K-009	05016SN-1211	Connecting Plate	1
K-010	01-013A-AT10	Picker Sol. Base	1
K-011	06010AF-8118	Plus Screw (M3*L4)	1
K-012	02015SC-7113	HEX.SOCKET BOLT(M4*L10)	2
K-013	08012CW-T121	Connecting Plate Stud Screw	1
K-014	08018CL-T121	Picker Base	1
K-015	08021PR-T121	Picker	1
K-016	07018SC-8118	Plus Screw (M3*L8)	1
K-017	08013CL-T121	Picker Bracket	1
K-018	15159SR-4013	E-Ring (3@)	1
K-019	10015SC-4517	Stopper Scerw (M3*L10)	2
K-020	08112SN-A001	Hex. Nut (M3)	1
K-021	08016SC-T121	Picker Bracket Screw (F) (15/64" N=28)	1
K-023	04038PR-T121	Hook Cover	1
K-024	08014AF-A001	Plus Screw (M3*L8)	2
K-035	116410S-8118	Driver Screw (11/64-40,L10)	1

Ref. No	Part No.	Part Names	Q'ty

L

Thread Cutting Set

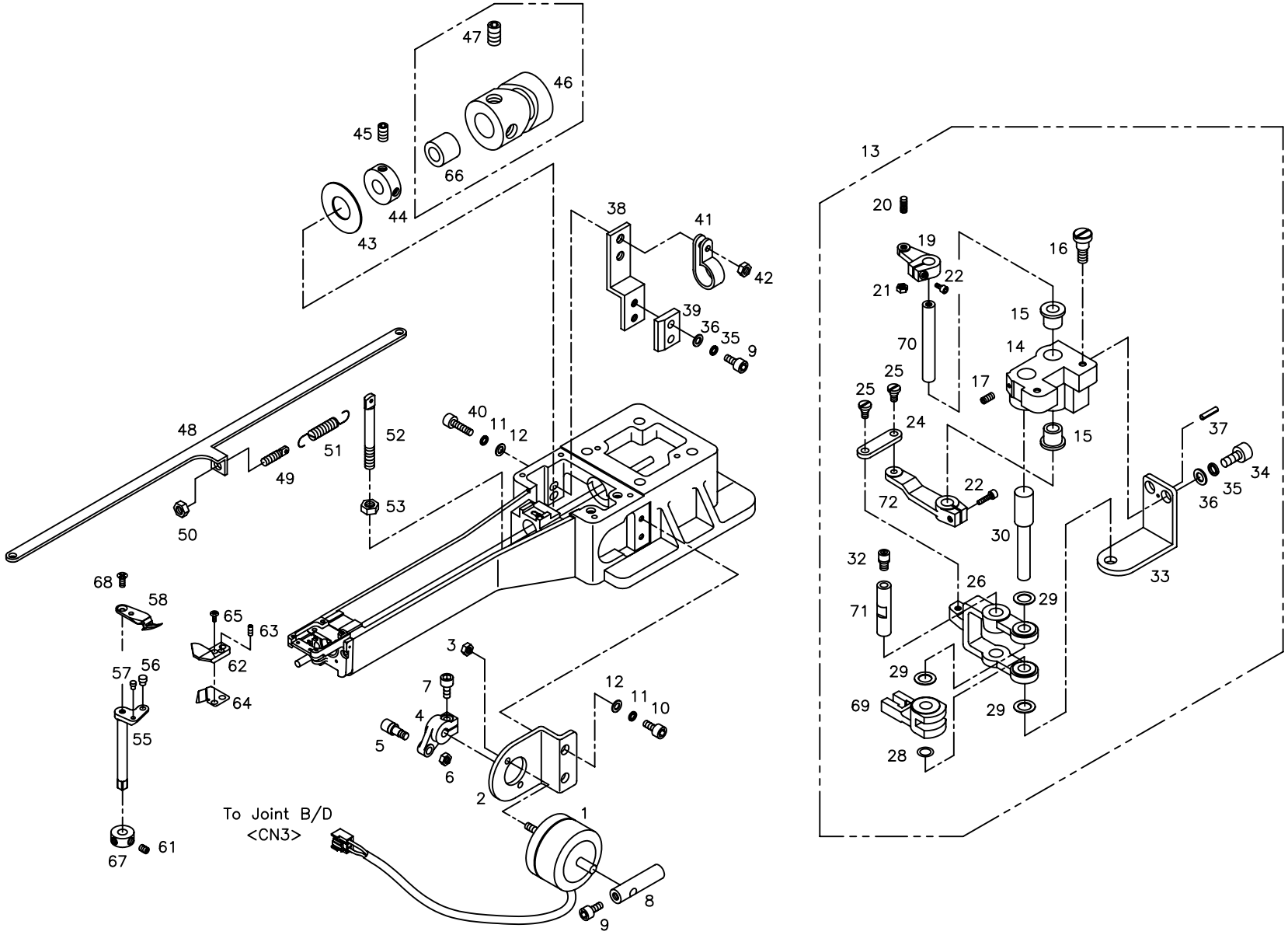

Ref.No	Part No.	PartNames		Q'ty
L-001	08068EL-T121	Thread Trimming Solenoid Ass'Y		1
L-002	08043PR-T121	Solenoid Plate		1
L-003	12010SN-1211	HEX.NUT (M5)		2
L-004	08047CL-T121	Solenoid Crank		1
L-005	08048AF-T121	Solenoid Crank Roller		1
L-006	08050SN-T121	Hex. Nut	(9/64" N=40)	1
L-007	02023SC-7113	HEX.SOCKET BOLT (M4*L8)		1
L-008	08041CW-T121	Solenoid Manual Handle		1
L-009	02015SC-7113	HEX.SOCKET BOLT(M4*L10)		3
L-010	08076SC-7113	HEX. SOCKET BOLT (M5*L12)		2
L-011	18048SW-3115	SPRING WASHER (5@)		4
L-012	18049SW-3111	WASHER (@5)		4
L-013	08010BM-T121	Mes Lever Shaft Bracket Set		1
L-014	08010CL-T121	Mes Lever Shaft Bracket		1
L-015	07021MP-T121	Lever Shaft Bush		2
L-016	SC-001608-00	Stud Screw		2
L-017	03022SC-4517	Hex. Socket Set Screw		1
L-019	08014FH-T121	Mes Driving Lever (U)		1
L-020	PN-000723-00	Mes Link Pin		1
L-021	02029SN-9311	Hex. Nut	(M4)	1
L-022	02015SC-7113	HEX.SOCKET BOLT(M4*L10)		2
L-024	08031PR-T121	Mes Lever Connecting Link		1
L-025	08022SC-A001	Stud Screw		2
L-026	08027CL-T121	Mes Lever		1
L-028	08022RB-T121	O-Ring	(P10A)	1
L-029	07024BR-UK01	Slide Washer	(TW0815)	3
L-030	08018CW-T121	Mes Lever Shaft		1
L-032	08023AF-T121	Mes Cam Roller Set		1
L-033	08027PR-T121	Mes Lever Supporter		1
L-034	07016SC-7113	HEX.SOCKET BOLT (M4*L12)		2
L-035	02028SW-9115	Spring Washer	(@4)	4
L-036	05009SW-1111	Washer	(@4)	4
L-037	08067ET-T121	Spring Pin	(@2*L10)	1
L-038	08051PR-T121	Mes Lever Stopper Bracket		1
L-039	08057PM-T121	Mes Lever Stopper		1
L-040	08062SC-7113	HEX. SOCKET BOLT (M5*L20)		2
L-041	11035ET-A001	Wire Holder		1
L-042	12010SN-1211	HEX.NUT (M5)		1
L-043	02004BR-T121	Slide Washer		1
L-044	08033CW-T121	Mes Cam Position Collar		1

Ref. No	Part No.	Part Names		Q'ty
L-045	03020SC-A001	Hex. Socket Set Screw	(11/64" N=40)	2
L-046	08036CM-T121	Mes Cam Set		1
L-047	04016AF-A001	Hex. Socket Set Screw	(M8*L8)	2
L-048	07025LA-T121	Moving Mes Connecting Link		1
L-049	08065SC-T121	Spring Shaft Screw		1
L-050	03031SN-A001	Hex. Nut	(11/64,N=40)	1
L-051	08063SP-T121	Thread Return Spring		1
L-052	08061CW-T121	Thread Return Spring Hanger		1
L-053	08058SN-1311	Hex. Nut	(M6)	1
L-055	ST-000019-00	Moving Mes Shaft		1
L-056	08123CW-T121	Moving Mes Connecting Link Pin		1
L-057	08122CW-A001	Mes Pin		1
L-058	07028PR-T121	Moving Mes		1
L-061	03022SC-4517	Hex. Socket Set Screw	(M4*L5)	2
L-062	07032CL-T121	Fixed Mes		1
L-063	03050SC-4517	Hex. Socket Set Screw		1
L-064	07033PR-T121	Under Thread Holder		1
L-065	07018SC-8118	Fixed Mes Screw	(M3*L8)	2
L-066	08037CW-T121	Mes Cam Bush		1
L-067	13003000T000	Mes Shaft Collar		1
L-068	08014SC-A001	Plus Screw	(M3*L8)	1
L-069	03302500T000	Mes Driving Crank		1
L-070	02002200T000	Mes Driving Lever Shaft		1
L-071	03302400T000	Mes Cam Roller Driving Shaft		1
L-072	03301900T000	Mes Driving Lever		1

M

X-Axis Drive Set

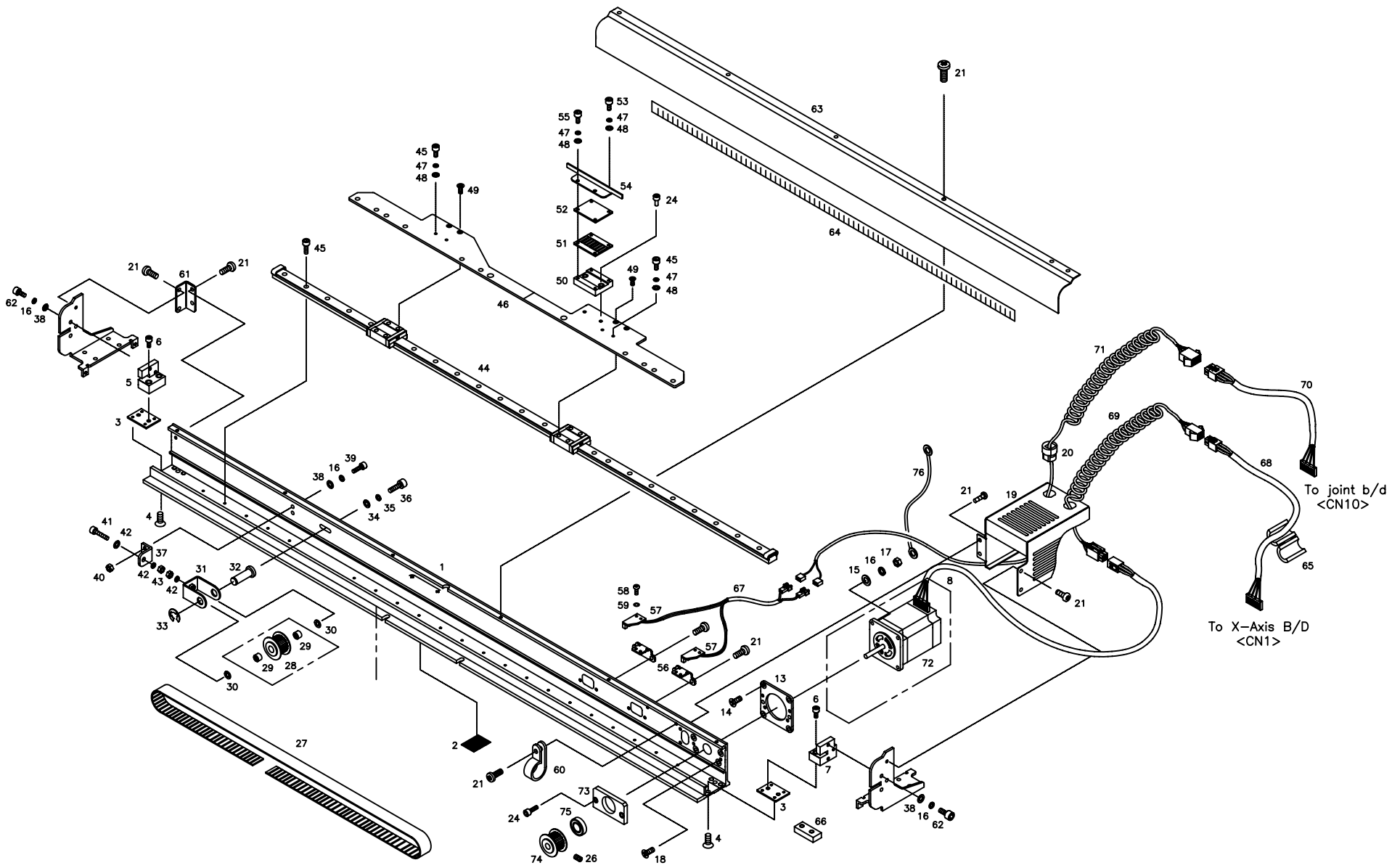

Ref. No	Part No.	Part Names		Q'ty
M-001	12001AD-T121	X-Axis Frame		1
M-002	15062SF-T121	Felt	(30*60*1T)	2
M-003	12049PR-T121	Connector Bracket Plate		2
M-004	10010SC-8119	Plus Screw	(M3*L5)	8
M-005	12051AD-T121	Y-Moving Connector Bracket(L)		1
M-006	02031SC-7113	HEX. SOCKET SCREW(M5*L10)		4
M-007	12053AD-T121	Y-Moving Connector Bracket(R)		1
M-008	12003BM-T121	X-Motor Set		1
M-013	05016SN-1211	X-Axis Motor Plate(A)		1
M-014	15057SC-8119	Plus Screw	(M4*L14)	4
M-015	18015SW-3111	Washer	(@4)	10
M-016	18014SW-3115	Spring Washer	(@4)	12
M-017	05016SN-1211	Hex.Nut	(M4)	4
M-018	15084SC-7119	C.S SCREW (M4*L6)		4
M-019	12055PR-T121	Motor Cover		1
M-020	23019EL-A001	CODE PUSH		2
M-021	15042SC-3123	Plus Screw	(M4*L6)	19
M-024	02014SC-7113	HEX. SOCKET BOLT (M4*L5)		4
M-026	04014SC-4517	Hex.Socket Set Screw	(M5*L5)	2
M-027	12048BT-T121	X-Axis Timing Belt		1
M-028	12017PU-T121	X-Driven Timing Pulley		1
M-029	12018BR-T121	Neddle Bearing	(Hk1010)	2
M-030	12019BR-T121	Sllde Washer	(Tw1020)	2
M-031	12020PR-T121	X-Pulley Shaft Bracket		1
M-032	12021CW-T121	X-Timing Pulley Shaft		1
M-033	12022SR-4013	E-Ring	(@7)	1
M-034	18049SW-3111	WASHER (@5)		1
M-035	18048SW-3115	SPRING WASHER (5@)		1
M-036	08076SC-7113	HEX. SOCKET BOLT (M5*L12)		1
M-037	12026PR-T121	Tension Adjusting Plate		1
M-038	06003SW-2111	Washer	(@4-s)	8
M-039	18013AF-7113	Hex. Socket Bolt	(M4*L10)	2
M-040	15029SN-3211	Hex. Nut	(M4)	2
M-041	15030SC-7113	HEX. SOCKET BOLT (M5*L30)		1
M-042	16018SW-1111	Washer	(@5)	3
M-043	12010SN-1211	HEX.NUT (M5)		2
M-044	12033LM-T121	X-Axls Lm Guide Rall Set		1
M-045	13020SC-7113	HEX. SOCKET BOLT (M3*L8)		27
M-046	12035PR-T121	Frame Joint		1
M-047	11019SW-9115	Spring Washer	(@3)	8

Ref. No	Part No.	Part Names		Q'ty
M-048	08011SW-1111	Washer	(@3)	8
M-049	10010SC-8119	Plus Screw	(M3*L6)	4
M-050	12036AD-T121	X-Axis Belt Bracket		1
M-051	12037PR-T121	X-Axis Belt Holder		1
M-052	12038PR-T121	X-Axis Belt Presser		1
M-053	13020SC-7113	HEX. SOCKET BOLT (M3*L8)		2
M-054	15040PR-T121	X-Sensor Bracket		1
M-055	09007SC-7113	HEX. SOCKET BOLT (M3*L12)		2
M-056	15041PR-T121	X-Sensor Bracket		2
M-057	15043EL-T121	Sensor Set		2
M-058	22015SC-9134	Plus Screw	(M3*L6)	4
M-059	08011SW-1111	Washer	(@3)	4
M-060	15046ET-T121	Wire Holder		3
M-061	15065PR-T121	X-Frame Reinforced Plate		1
M-062	18013AF-7113	Hex. Socket Bolt	(M4*L10)	6
M-063	12059AD-T121	X-Axis Frame Cover		1
M-064	02016ET-T121	Scale Sticker (X)		1
M-065	15044EL-T121	Bid		1
M-066	15073AD-T121	X-Moving Stopper		2
M-067	25055EL-T121	X-Ori. In Sensor Cable	(1HT-55)	1
M-068	25018EL-T121	X-Steo Motor Power Cable 1	(1HT-18)	1
M-069	25019EL-T121	X-Steo Motor Power Cable 2	(1HT-19)	1
M-070	25039EL-T121	X-Original In	(1HT-39)	1
M-071	25040EL-T121	X-Original In Con.	(1HT-40)	1
M-072	05100100T000	X-Motor	(103H7126-2853)	1
M-073	05100200T000	X-Axis Motor Plate(B)		1
M-074	14063PU-UK01	Timing Pulley "B"		1
M-075	15077BR-A001	Ball Bearing	(698Zz)	1
M-076	02106600T000	X-Motor Frame Trans Earth	(CEIHT+66)	1

N

Y-Axis Drive Set

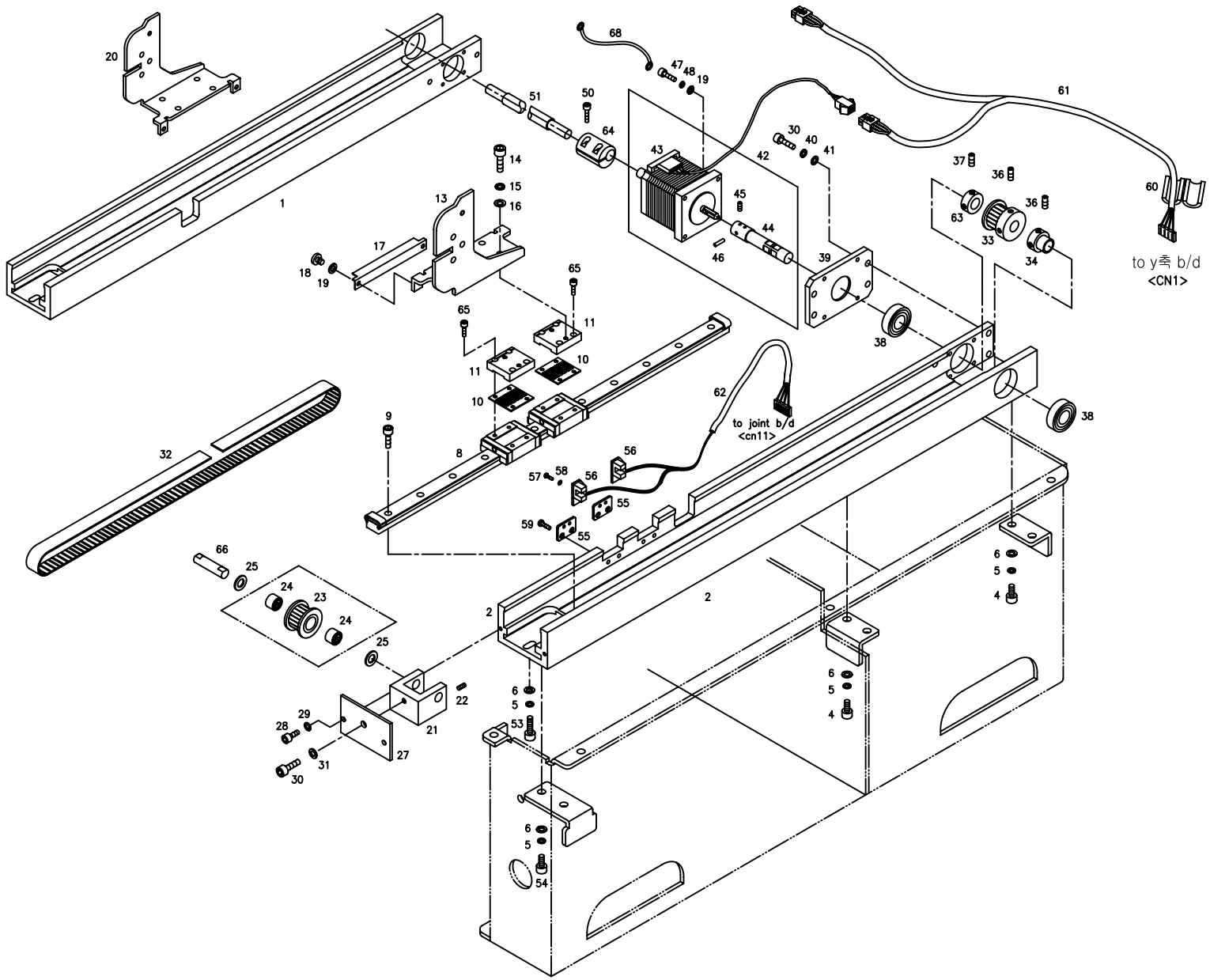

Ref.No	Part No.	PartNames	Q'ty
N-001	13001AD-T121	Y-Axis Frame (L)	1
N-002	13002AD-T121	Y-Axis Frame (R)	1
N-004	14002SC-7113	HEX.SOCKET BOLT (M6*L15)	8
N-005	16014SW-4115	Spring Washer (@6)	10
N-006	08057SW-1111	Washer (@6)	10
N-008	13047LM-T121	Y-Axis Lm Guide Rail Set	2
N-009	13020SC-7113	HEX. SOCKET BOLT (M3*L8)	24
N-010	13057PR-T121	Timing Belt Fixing Plate	4
N-011	05016SN-1211	Y-Driver Bracket	4
N-013	13064PR-T121	X-Frame Supporter(R)	1
N-014	07016SC-7113	HEX.SOCKET BOLT (M4*L12)	8
N-015	02028SW-9115	Spring Washer (@4)	8
N-016	05009SW-1111	Washer (@4-L)	8
N-017	16067PR-T121	Y-Sensor Plate	1
N-018	09018SC-8118	Plus Screw (M4*L6)	2
N-019	18015SW-3111	Washer (@4)	10
N-020	13060PR-T121	X-Frame Supporter(L)	1
N-021	13036AD-T121	Y-Axis Tension Adjusting Base	2
N-022	03022SC-4517	Hex. Socket Set Screw (M4*L5)	2
N-023	12017PU-T121	Timing Pulley "A"	2
N-024	12018BR-T121	Neddle Bearing Hk1010(Ina)	4
N-025	12019BR-T121	Fiber Washer R-Tw1020	4
N-027	13068PR-T121	Y-Frame Cover	2
N-028	02015SC-7113	HEX.SOCKET BOLT(M4*L10)	4
N-029	06003SW-2111	Washer (@4)	4
N-030	08062SC-7113	HEX. SOCKET BOLT (M5*L20)	6
N-031	18049SW-3111	WASHER (@5)	2
N-032	13035BT-T121	Y-Axis Timing Belt	2
N-033	13033PU-T121	Y-Drive Timing Pulley	2
N-036	04012AF-A001	Hook Shaft Bush Screw	12
N-037	04016AF-A001	Cam Collar Screw	4
N-038	13026BR-T121	Needle Bearing (6002Z)	4
N-039	13003AD-T121	Y-Axis Motor Bracket	2
N-040	18048SW-3115	SPRING WASHER (5@)	8
N-041	16018SW-1111	Washer (@5)	8
N-042	13004BM-T121	Y-Driving Motor Set	2
N-043	13004AF-T121	Y-Driving Motor	2
N-044	ST-000018-00	Y-Driving Shaft (A)	2
N-045	15005SC-4517	Hex. Socket Set Screw (M4*L3)	4
N-046	12004ET-T121	Spring Pin (@3*L10)	2

Ref. No	Part No.	Part Names	Q'ty
N-047	05008AF-4113	Hex.Socketbolt (M4*L16)	8
N-048	18014SW-3115	Springwasher (@4-No2)	8
N-050	03016SC-4113	Hex.Socketbol t(M5*L15)	4
N-051	16051SH-T121	Y-Drivingshaft(B)	1
N-053	08091SC-7113	HEX. SOCKET BOLT (M6*L20)	2
N-054	16059SC-7113	HEX.SOCKET BOLT (M6*L12)	4
N-055	16065PR-T121	Y-Sensorbracket	2
N-056	16062EL-T121	Sensorset	2
N-057	08006SC-8118	Plusscrew (M3*L5)	4
N-058	08011SW-1111	Springwasher (@3-S)	4
N-059	15042SC-3123	Trussscrew (M4*L6)	4
N-060	15044EL-T121	Bid(S)	4
N-061	25021EL-T121	Y-Stepmotorpower1 (1Ht-21)	1
N-062	25056EL-T121	Y-Originalin (1Ht-56)	1
N-063	03704900A000	Camshaftcollar	2
N-064	08005200T000	Jointcollar	2
N-065	03071SC-A001	Hex.Scoketbolt (M3*L15)	16
N-066	03204200T000	Y-Frametensionshaft	2
N-067	03002700T000	Bearingcollar	2
N-068	02106700T000	Y-Motorframe1Transearth	1
	02107000T000	Y-Motorframe2Transearth	1

Spool Stand

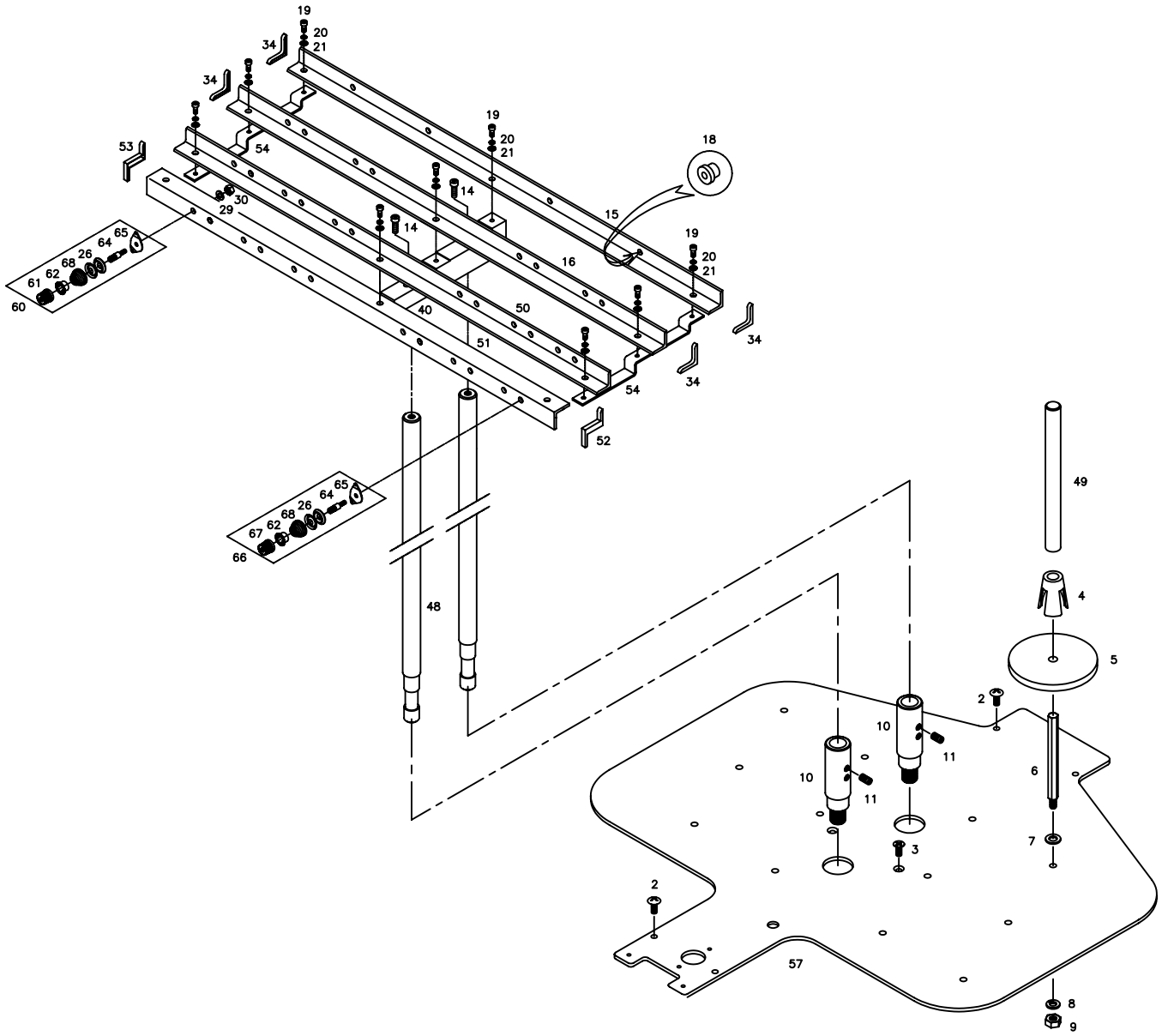
19
20
21
34
34
53
54
30
29
14
14
19
20
21
18
15
16
19
20
21
65
64
26
68
62
61
60
40
50
51
34
34
54
52
65
64
26
68
62
67
66
48
49
4
5
2
10
11
10
11
6
7
3
2
57
8
9

Ref.No	Part No.	Part Names		Q'ty
O-002	18153SC-3123	Plus Screw	(M4*L10)	4
O-003	02002SC-7119	PLUSS SCREW (M4*L8)		2
O-004	12012PM-A001	Spool Holder		12
O-005	12052SF-A001	Spool Sponge		12
O-006	12009SC-A001	Spool Post		12
O-007	18049SW-3111	WASHER (@5)		12
O-008	18048SW-3115	SPRING WASHER (5@)		12
O-009	12010SN-1211	HEX.NUT (M5)		12
O-010	05016SN-1211	Spool Stand Bolt		2
O-011	04014SC-4517	Hex.Socket Set Screw	(M5*L5)	4
O-014	03016SC-4113	Hex. Socket Bolt	(M5*L15)	2
O-015	16015AD-T121	Angle "A"	(12C)	1
	16015AD-T151	Angle "A"	(15C)	
O-016	16016AD-T121	Angle "B"	(12C)	1
	16016AD-T151	Angle "B"	(15C)	
O-018	12042PM-A001	Eyelet		24
O-019	02015SC-7113	HEX.SOCKET BOLT(M4*L10)		4
O-020	02028SW-9115	Spring Washer	(@4)	4
O-021	18049SW-3111	WASHER (@5)		4
O-026	11153PR-B001	Tension Disc @22		24
O-029	18048SW-3115	SPRING WASHER (5@)		12
O-030	03031SN-A001	Pin. Nut	(11/64,N=40)	12
O-034	12029RB-T121	Angle Side Cap (A)	(12C)	4
	12029RB-T121	Angle Side Cap (A)	(15C)	6
O-040	10600100H000	Thread Angle Frame		1
O-048	01001500T000	Spool Stand L=380	(12C)	2
	16010CW-T121	Spool Stand L=410	(15C)	
O-049	10000100A000	Thread Guide L=200		2
O-050	05200304T000	Angle "C"	(12C)	1
	05200115T000	Angle "C"	(15C)	
O-051	05200214T000	Angle "D"	(12C)	1
	05200215T000	Angle "D"	(15C)	
O-052	10200210T000	ANGLE SIDE CAP (B-2)	(12C)	1
O-053	10200110T000	ANGLE SIDE CAP (B-1)	(12C)	1
	12030RB-T121	ANGLE SIDE CAP (B)	(15C)	2
O-054	10200304T000	Thread Hanger Angle Clamp	(12C)	1
	16011CW-T151	Thread Hanger Angle Clamp	(15C)	
O-057	10100124T010	Spool Plate	(12C)	1
	10100125T010	Spool Plate	(15C)	
O-060	10600110B000	SUB TENSION ADJUSTING SET		11

Ref. No	Part No.	Part Names		Q'ty
O-061	08300600A000	SUB TENSION ADJUSTING NUT (A)		11
O-062	11088PM-A001	TENSION SPRING STOPPER		12
O-064	08301000A000	TENSION ADJUSTING STUD		12
O-065	11162PR-A001	TENSION PLATE		12
O-066	10600210B000	SUB TENSION ADJUSTING SET	(black)	1
O-067	10600610A000	SUB TENSION ADJUSTING NUT (B)	(black)	1
O-068	08301100A000	TENSION SPRING		12

P

Border & Tubular Frame

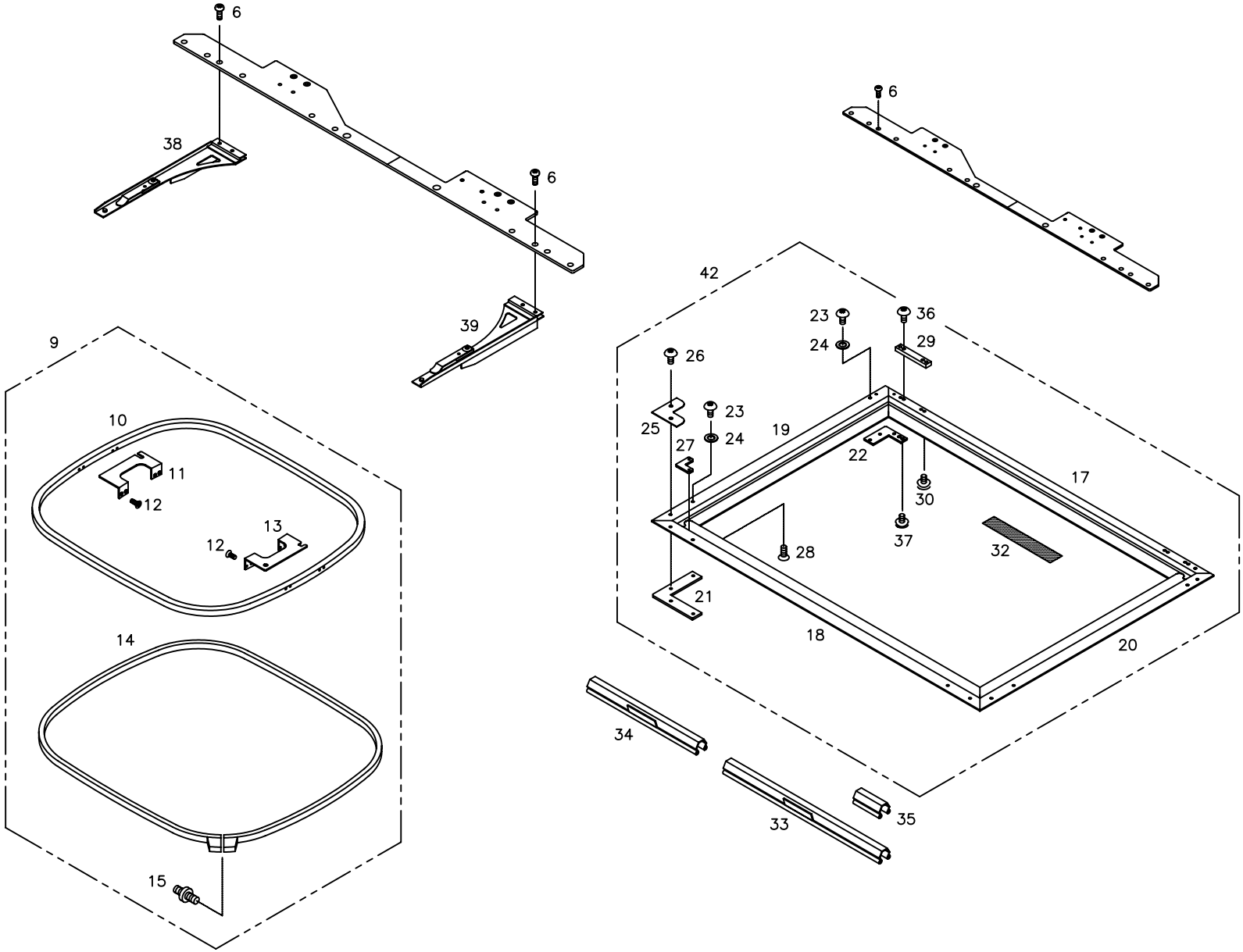

Ref.No	Part No.	PartNames		Q'ty
P-006	18153SC-3123	Plus Screw	(M4*L10)	4
P-009	22009BM-T121	Tubular Frame Set		2
P-010	22009PM-T121	Tubular Frame (Inner) 37*43		1
P-011	05016SN-1211	Tubular Frame Holder (B)		1
P-012	13061SC-8119	Plus Screw (M3*L10)		8
P-013	22010PR-T121	Tubular Fraem Holder (A)		1
P-014	22013PM-T121	Tubular Frame (Outer) 37*43		1
P-015	18111CW-A001	Frame Tension Adjusting Bolt		1
P-017	24001AD-T121	Border Frame Sash (A)		1
P-018	24006AD-T121	Border Frame Sash (B)		1
P-019	24007AD-T121	Border Frame Sash (C)		1
P-020	24008AD-T121	Border Frame Sash (D)		1
P-021	24002PR-T121	Connecting Plate "A"		2
P-022	24003PR-T121	Connection Plate (B)		2
P-023	15042SC-3123	Truss Screw	(M4*L6)	8
P-024	18015SW-3111	Washer	(4@)	8
P-025	24009PR-T121	Connecting Plate "D"		2
P-026	15042SC-3123	Truss Screw	(M4*L6)	4
P-027	24011PR-T121	Connecting Plate "C"		4
P-028	10010SC-8119	Plus Screw	(M3*L5)	8
P-029	24013CL-T121	Frame Fixing Plate		2
P-030	15042SC-3123	Truss Screw	(M4*L6)	2
P-032	24016SF-T121	Felt		14
P-033	18084PR-A001	Embroidery Frame Clip (L300)		4
P-034	18085PR-T121	Embroidery Frame Clip (L220)		2
P-035	18086PR-B001	Frame Clip Support		12
P-036	18153SC-3123	Plus Screw	(M4*L10)	4
P-037	02010SC-3123	Truss Screw	(M4*L8)	2
P-038	GP-007335-00	TUBULAR FRAME ATTACHMENT (L)		1
P-039	GP-007336-00	TUBULAR FRAME ATTACHMENT (R)		1
P-042	24001BM-T121	Border Frame Set		1

Ref. No	Part No.	Part Names	Q'ty

Q

Main Controller

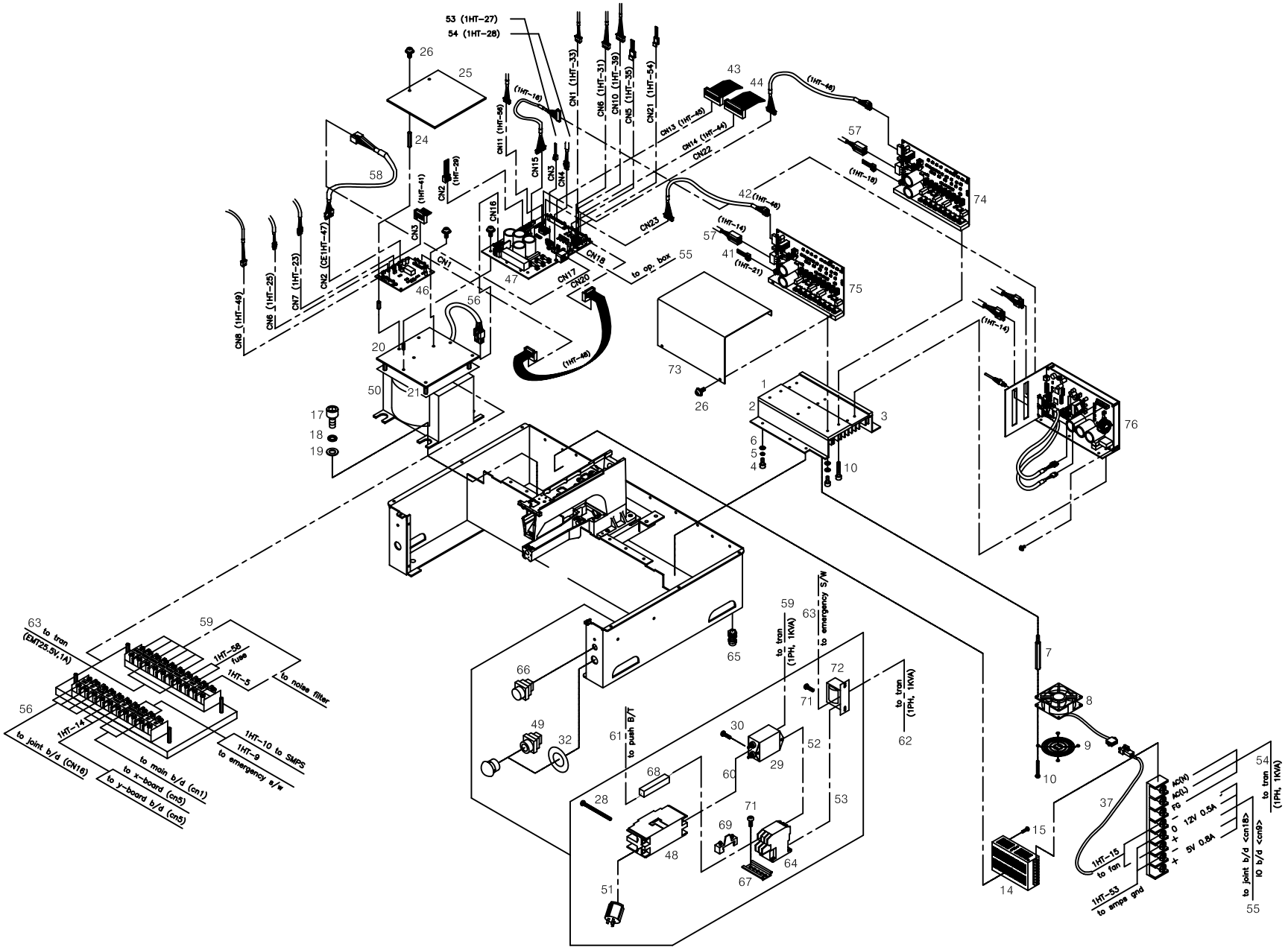

Ref.No	Part No.	PartNames		Q'ty
Q-001	10-004A-AT01	Heatsink		1
Q-002	10-001A-AT01	Bracket(L)		1
Q-003	10-002A-AT01	Bracket(R)		1
Q-004	02014SC-7113	HEX. SOCKET BOLT (M4*L5)		6
Q-005	02028SW-9115	Spring Washer	(@4)	6
Q-006	05009SW-1111	Washer	(@4-L)	6
Q-007	10-001M-AT01	Stud		4
Q-008	01-002A-AT01	Cooling Fan		1
Q-009	05016SN-1211	Fan Cover		1
Q-010	01-002M-AU12	Plus Screw	(M4*L35)	4
Q-014	GP-007473-00	SMPS		1
Q-015	02023SC-7113	HEX.SOCKET BOLT (M4*L8)		2
Q-016	20026EL-T121	Transformer (1Kva)		1
Q-017	08035SC-7113	HEX. SOCKET BOLT (M6*L10)		4
Q-018	16014SW-4115	Spring Washer	(@6)	4
Q-019	08057SW-1111	Washer	(@6)	4
Q-020	20030PR-T121	Intercept Plate		1
Q-021	20032SC-T121	Plus Screw	(M3*L10)	4
Q-024	20036SC-T121	Cover Stud		4
Q-025	20037ET-T121	Cover		1
Q-026	22015SC-9134	Plus Screw	(M3*L6)	8
Q-028	01020SC-8118	Hex. Socket Bolt	(M4*L65)	2
Q-029	GP-007476-00	NOISE FILTER		1
Q-030	20042SC-9134	Plus Screw	(M4*L6)	2
Q-032	02015ET-T121	Sticker		1
Q-037	25015EL-T121	Smps To Fan	(1Ht-15)	1
Q-041	25021EL-T121	Y-Step Motor Power 1	(1Ht-21)	1
Q-042	25046EL-T121	Joint Power Signal	(1Ht-46)	1
Q-043	25045EL-T121	Cable (25-45)		1
Q-044	25044EL-T121	Cable (25-44)		1
Q-046	20036EL-T121	Sub Control Board	(1H,4H)	1
Q-047	20033EL-T126	Joint Board	(6Head)	1
Q-048	05000300T000	Main Power S/W (Abs52Bf-10A)		1
Q-049	02000800T000	Emergency Switch Set		1
Q-050	05000100T000	Main Transformer	(1Ph,1Kva)	1
Q-051	02100100T000	Main Cable	(Ce1Ht-1)	1
Q-052	02100300T000	Nfb2 - Noise Filter Cable		1
Q-053	02100500T000	Filter To Transformer Cable		1
Q-054	02101000T000	Transformer To Smps		1
Q-055	02101100T000	From Smps To Joint Io Power		1

Ref. No	Part No.	Part Names		Q'ty
Q-056	02101200T000	Sol.Power In Cable		1
Q-057	02101400T000	Cable	(1Ht-14)	1
Q-058	02104700T000	Sub. Board Power Calbe 1Ht-47		1
Q-059	02105900T000	Transformer To Filter		1
Q-060	02106000T000	Noise Filter - Mc		1
Q-061	02106100T000	I/O Switch Connect Cable		1
Q-062	02106200T000	Magnetic Emt24 Trans		1
Q-063	02106300T000	Trans And Emergency S/W In		1
Q-064	02000100T000	Magnetic Switch Set		1
Q-065	02000400T000	Cable Grand	(Dacl-11)	1
Q-066	02000700T000	Push B/T Switch		1
Q-067	02000900T000	Magnetic S/W Fixed Bracket		1
Q-068	02001200T000	Resister 5/20W (Ce)		1
Q-069	02001300T000	Bracket Stopper (Ce)		1
Q-071	02010SC-3123	Truss Screw	(M4*L8)	4
Q-072	05000210T000	Transformer (Emt25V) 1A/25.5V		1
Q-073	01-002M-AT01	X-Y Driver Box Cover		1
Q-074	01-0000-SD00	X- BOARD		1
Q-075	02-0000-SD00	Y- BOARD		1
Q-076	02-1000-MD00	Main Board		1

Operation Unit

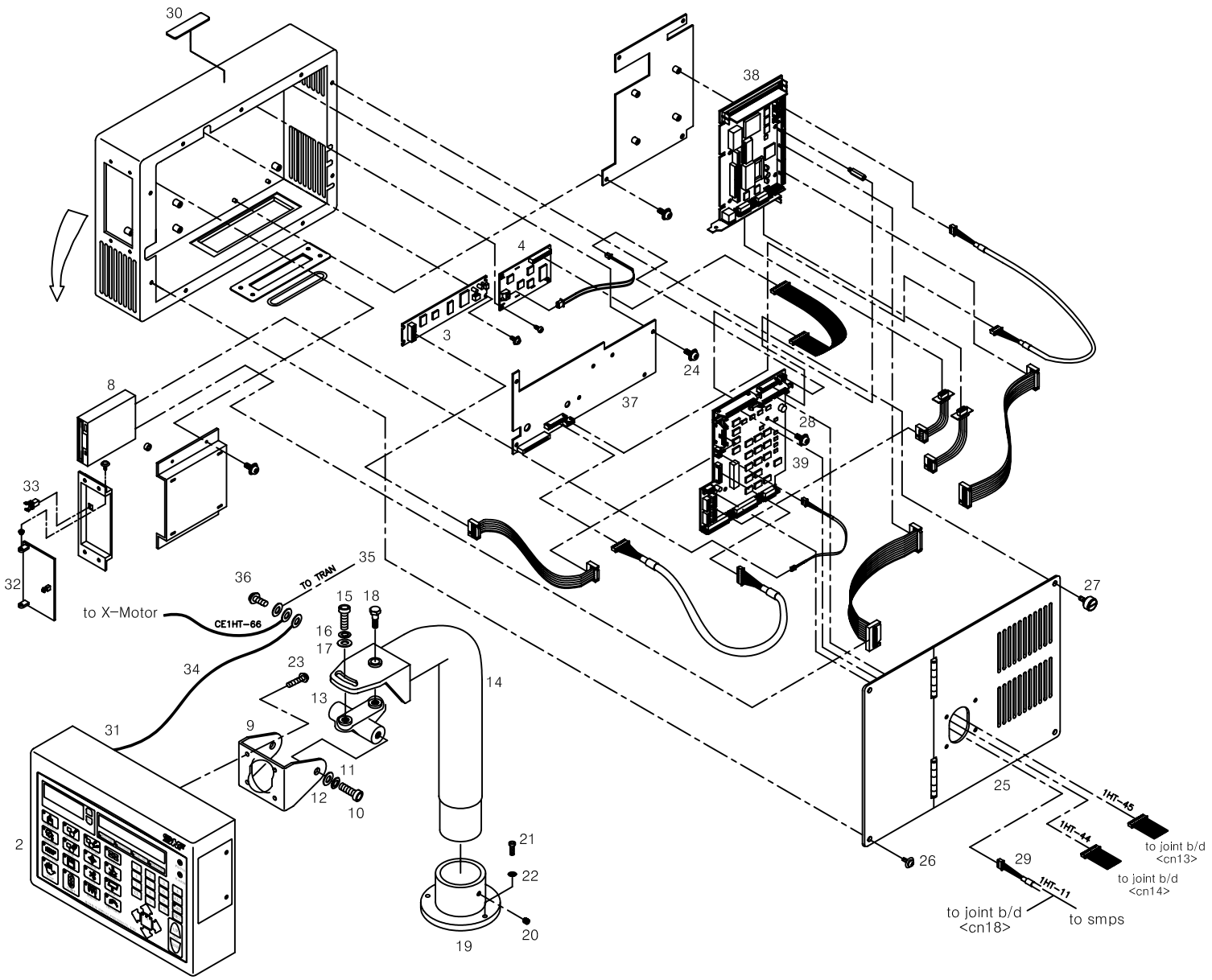

Ref. No	Part No.	Part Names	Q'ty
R-002	10-003A-AT10	Membrane Switch	1
R-003	01-003A-AT01	Vfd	1
R-004	01-004A-AT01	Lcd	1
R-008	10-004A-AT10	Fdd	1
R-009	19033PR-T121	Operation Box Hinge Bracket	1
R-010	08087SC-7113	HEX. SOCKET BOLT (M8*L25)	2
R-011	15095SW-3115	SPRING WASHER (@8)	2
R-012	08041SW-1111	Washer (@8-S)	2
R-013	05016SN-1211	Hinged Block	1
R-014	19040CA-T121	Holder	1
R-015	08087SC-7113	HEX. SOCKET BOLT (M8*L25)	1
R-016	15095SW-3115	SPRING WASHER (@8)	1
R-017	20038PR-T121	Washer (@8)	1
R-018	19039CW-T121	Adjusting Bolt	1
R-019	19044CW-T121	Bush	1
R-020	14060SC-4517	Hex.Socket Set Screw (M6*L6)	2
R-021	08091SC-7113	HEX. SOCKET BOLT (M6*L20)	3
R-022	16018SW-1111	Washer (@5)	3
R-023	22033SC-7134	PLUS SCREW (M5*L12)	4
R-024	09005SC-3123	Truss Screw (M3*L6)	5
R-025	10-007A-AT10	Operation Box Cover	1
R-026	02010AF-3123	Truss Screw (M4*L8)	4
R-027	15120SC-A001	Position Adjusting Screw	3
R-028	22025SC-9134	Screw (M4*L10)	1
R-029	25011EL-T121	Smps To Joint Io Card (1Ht-11)	1
R-030	09000300B000	Magnet Sticker	1
R-031	19002BM-T121	Operation Box	1
R-032	01-002B-SW63	Fdd Protcetor	1
R-033	01-003B-SW63	Push Lathy	1
R-034	02107100T000	Op In - Op Holder Earth	1
R-035	02106500T000	Op-Box Transfomer Earth	1
R-036	22025SC-9134	Screw (M4*L10)	1
R-037	02-1000-LD00	LED BOARD	1
R-038	02-000A-AT01	CPU CARD	1
R-039	02-0000-IO00	I/O BOARD ASS'Y	1

Ref. No	Part No.	Part Names	Q'ty

S

Bobbin Winder

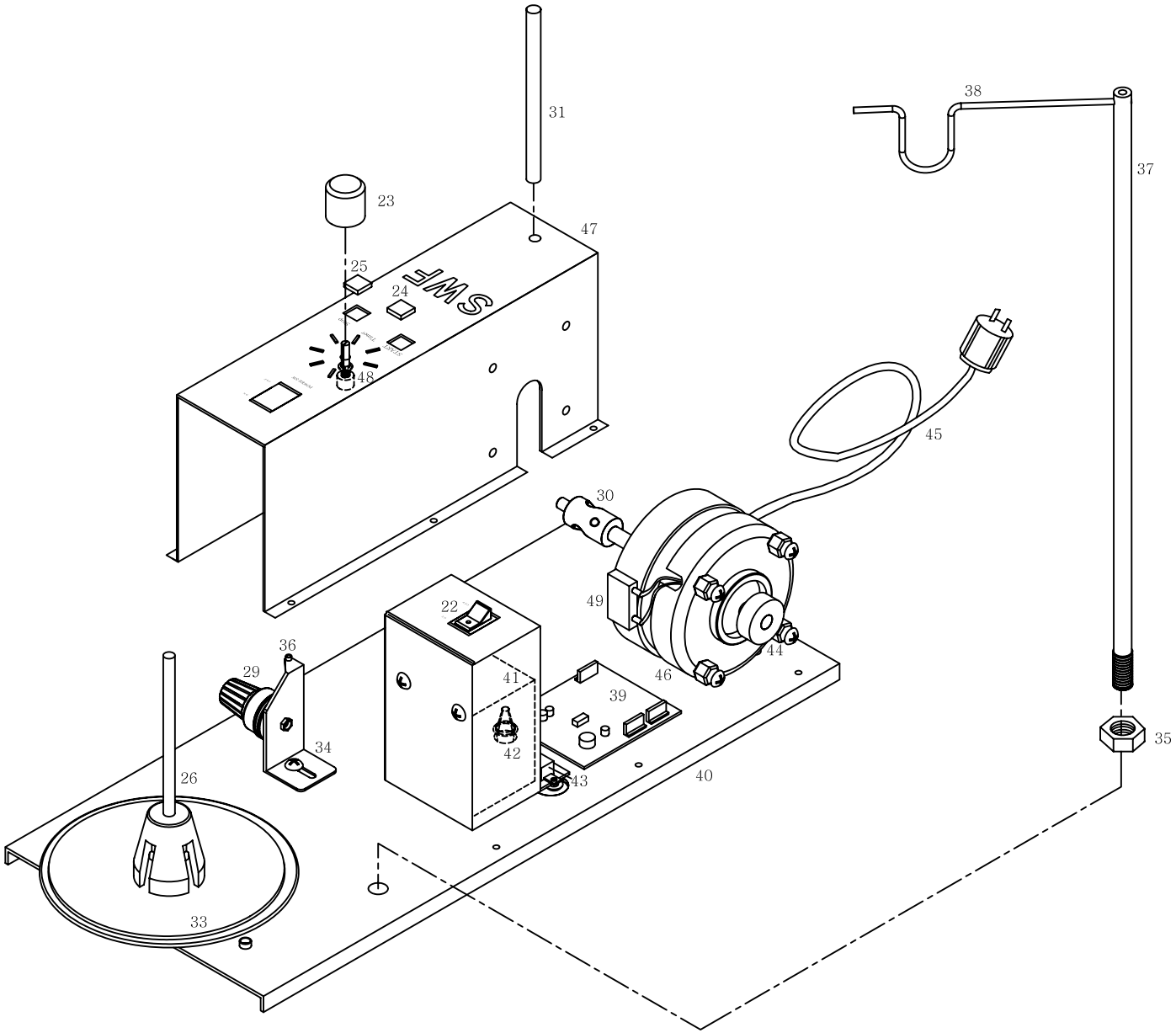

Ref.No	Part No.	Part Names	Q'ty
S-022	23001EL-B001	On/Off Switch	1
S-023	23002EL-B001	Timer	1
S-024	23003EL-B001	Start Switch	1
S-025	23004EL-B001	Stop Switch	1
S-026	23005BM-B001	Spool Post	1
S-029	23008BM-B001	Tension Adjusting Set	1
S-030	23009CW-B001	Bobbin Shaft	1
S-031	02026SC-A001	Bobbin Stand	1
S-033	23002BM-B001	Bobbin Winder	1
S-034	23019PR-B001	Tension Adjustment Holder	1
S-035	23043SN-B001	Antenna Bar Nut	1
S-036	23044CN-B001	Ceramic Ring	1
S-037	23007SH-B001	Antenna Bar	1
S-038	23006SH-B001	Antenna Bar Hanger	1
S-039	23010EL-B001	Control Board	1
S-040	23023ET-A001	Base	1
S-041	23014EL-B001	Transformer	1
S-042	23012EL-B001	Fuse Box	1
S-043	23025ET-B001	Transformation Switch	1
S-044	23005PU-A001	Aluminium Ring	1
S-045	23045ET-B001	AC Cord	1
S-046	23015MT-B001	Motor	1
S-047	230209R-A001	Cover	1
S-048	23027ET-B001	Variable Resistance	1
S-049	23028ET-B001	Consenser	1

Ref. No	Part No.	Part Names	Q'ty

Lubrication

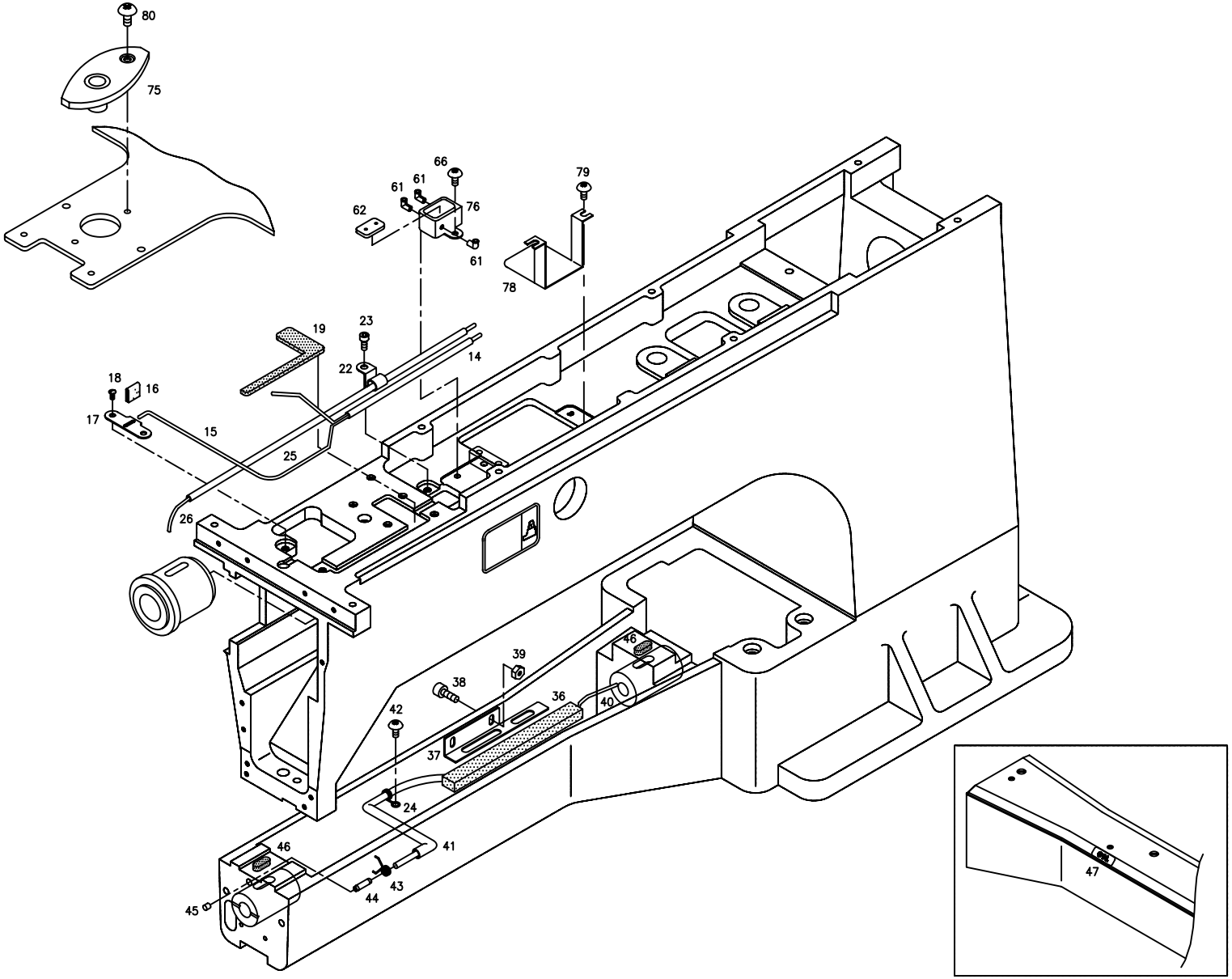

Ref. No	Part No.	Part Names	Q'ty
T-014	32024ET-T121	Oil Hose	1
T-015	32025ET-T121	Wick	1
T-016	32027SF-T121	Felt For Crank Rod	1
T-017	32028PR-T121	Felt Holder For Crank Rod	1
T-018	05041SC-A001	Guide Rail Serew	2
T-019	32026SF-T121	Arm Felt	1
T-022	32015PR-T121	Oil Hose Holder "B"	1
T-023	02014SC-7113	HEX. SOCKET BOLT (M4*L5)	1
T-024	05016SN-1211	Needle Bar Hose Holder "B"	1
T-025	32012ET-T121	Oil Hose	1
T-026	32013ET-T121	Wick L=200	1
T-028	32019PR-T121	Needle Bar Hose Holder "A"	1
T-032	32031ET-T121	Wick L=350	1
T-036	32039SF-T121	Bed Felt	1
T-037	32040PR-T121	Bed Felt Cover	1
T-038	02023SC-7113	HEX.SOCKET BOLT (M4*L8)	2
T-039	05016SN-1211	Hex,Nut	2
T-040	32045ET-T121	Wick L=435	1
T-041	32044ET-T121	Oil Hose L=200	1
T-042	28021SC-3123	Truss Screw (M3*L4)	1
T-043	32046SP-T121	Holder For Oil Hose	1
T-044	32045CW-T121	Oil Hose Pin	1
T-045	32047RB-T121	Oil Rubber Cap	1
T-046	32043SF-T121	Hook Shaft Bush Felt	2
T-047	32050ET-T121	Bed Oil Sticker	1
T-061	01002300T000	Oil Tube Pin	3
T-062	01002400T000	Oil Storing Felt	1
T-066	02010SC-3123	Truss Screw (M4*L8)	2
T-075	01003100T000	Oil Funnel	1
T-076	01002210T000	Oil Storing Box	1
T-078	03202PR-CT01	Cable Guide "E" (M4*L8)	1
T-079	02010SC-3123	Truss Screw	2
T-080	15042SC-3123	TRUSS SCREW (M4*L6)	1

Ref. No	Part No.	Part Names	Q'ty

U

Lamp (Option)

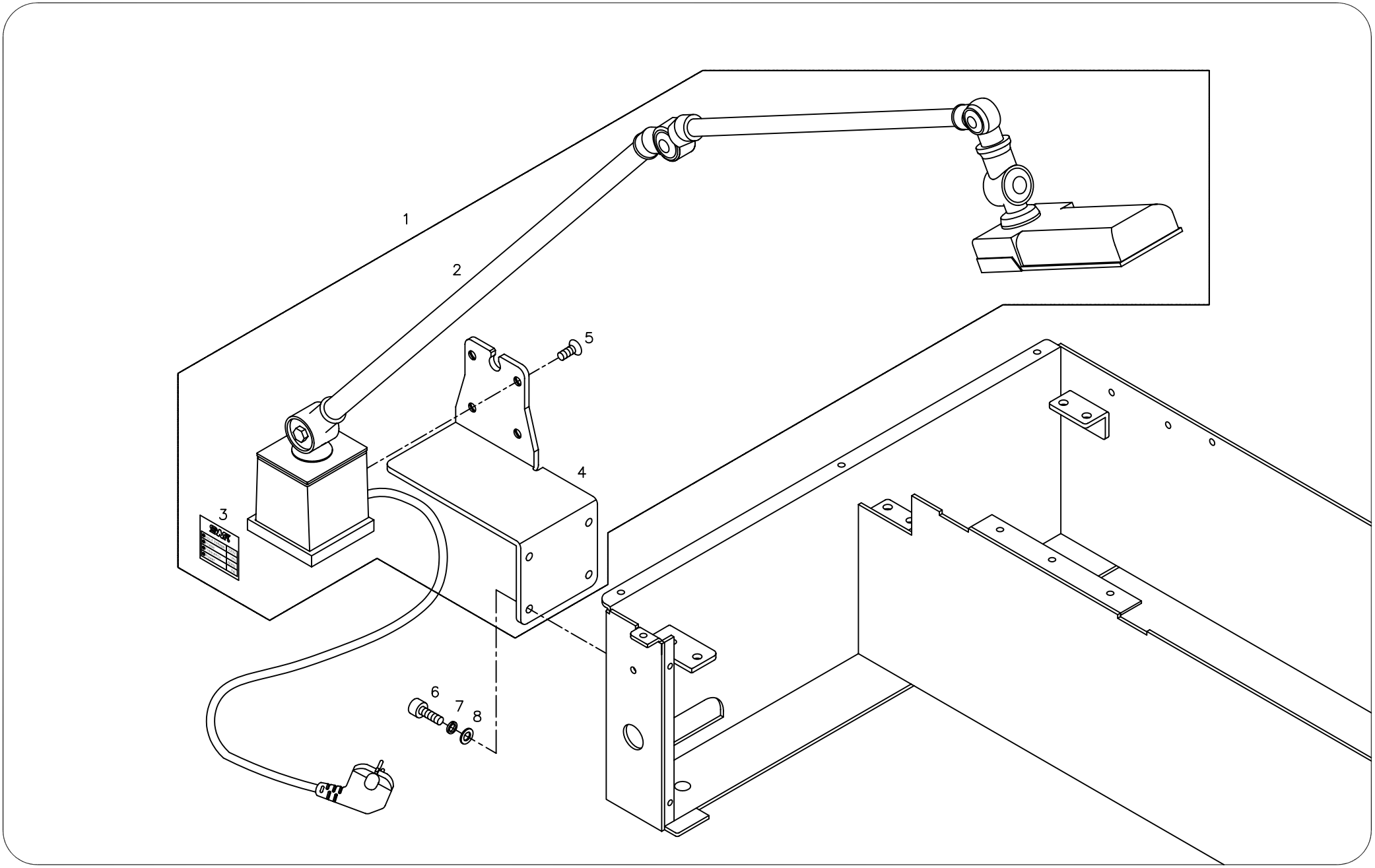

Ref. No	Part No.	Part Names	Q'ty
U-001	33000BM-T121	Lamp Set	1
U-002	33001EL-T121	Lamp	1
U-003	33002ET-T121	Lamp Sticker	1
U-004	33003PR-T121	Lamp Fix Bracket	1
U-005	-	Plus Screw	4
U-006	08076SC-7113	HEX. SOCKET BOLT (M5*L12)	4
U-007	18048SW-3115	SPRING WASHER (5@)	4
U-008	16018SW-1111	Washer (@5)	4

Ref. No	Part No.	Part Names	Q'ty