PARTS BOOK

SIX-HEAD AUTOMATIC EMBROIDERY MACHINE

SWF®

PME-050525

SUNSTAR PRECISION CO., LTD.

Machine Layout

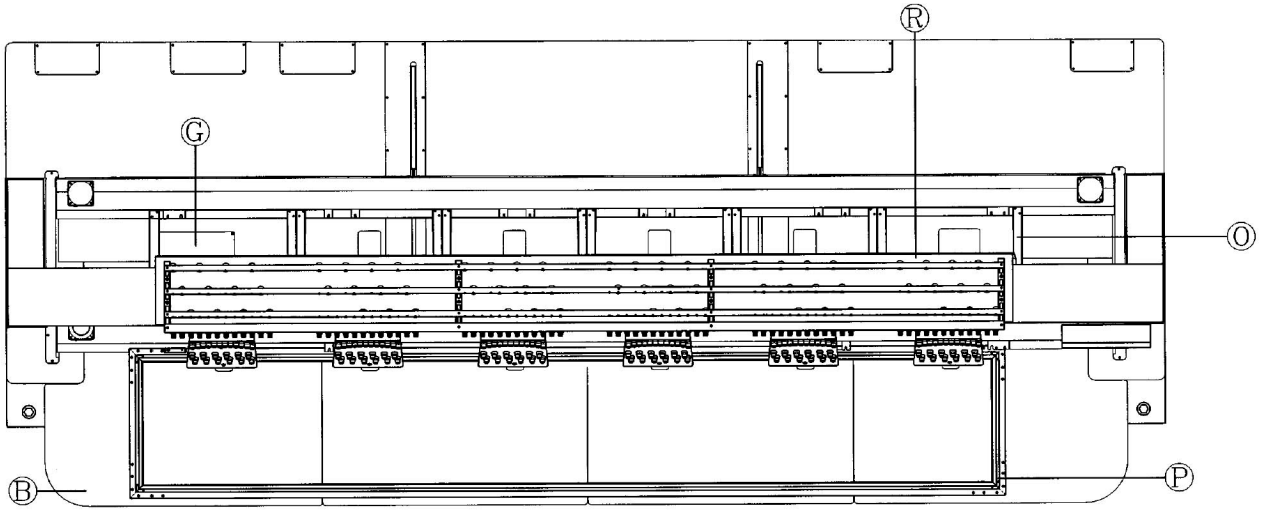

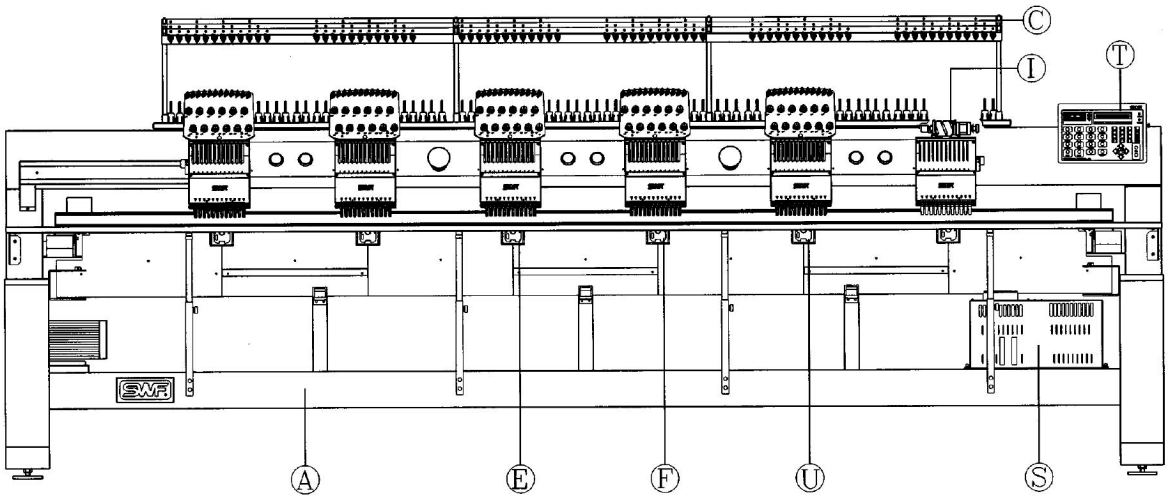

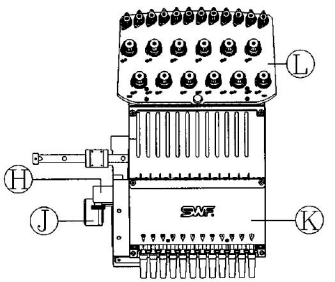

SWF®

CONTENT

A	Machine Body Ass'y	7
B	Work Table	9
C	Spool Stand	11
D	Main Drive System	13
E	Bed Ⅰ	17
F	Bed Ⅱ	19
G	Thread Cutting Drive System	21
H	Arm Ⅰ	23
H1	Arm Ⅱ	27
H2	Arm Ⅲ	29
I	Color Change Set	31
J	Wiper Set	33
K	Head	37
L	Thread Tension Unit	41
M	X-Axis Drive Set	45
N	Y-Axis Drive Set	47
O	Tubular Frame	51
P	Border Frame	53
Q	S/B Switch Unit	55
R	Sub-Control Unit & Lamp	57
S	Main Controller	59
T	Operation Unit	61
U	Bobbin Winder	63

A

Machine Body Ass'y

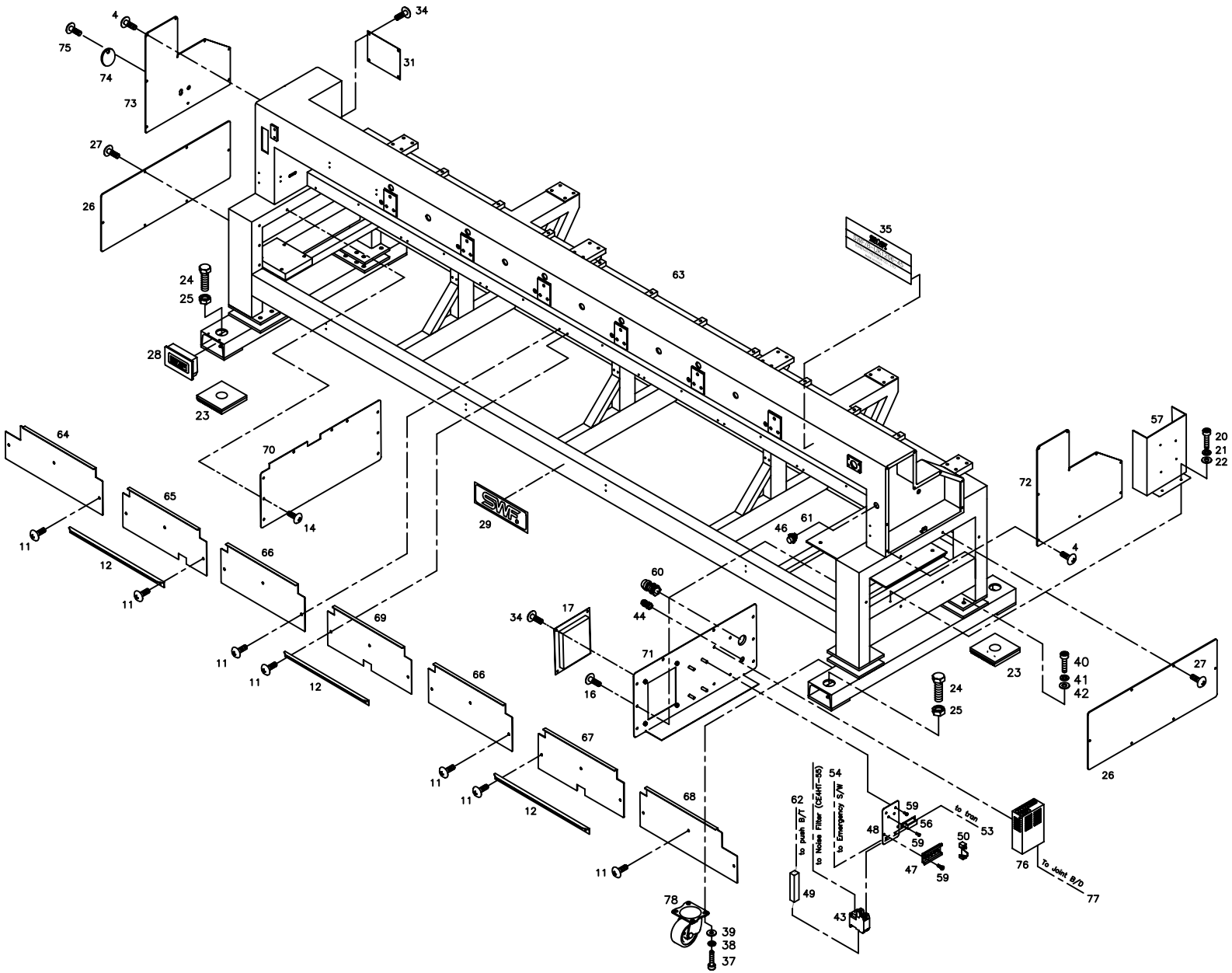

Ref. No	Part No.	Part Names	Q'ty
A-004	02044SC-3123	Truss Screw (M5*L8)	18
A-011	02044SC-3123	Truss Screw (M5*L8)	21
A-012	17087CW-UK01	Table Support Angle	3
A-014	02044SC-3123	Truss Screw (M5*L8)	9
A-015	02071PR-UK06	Body Inside Cover (B)	1
A-016	02044SC-3123	Truss Screw (M5*L8)	9
A-017	02088PR-UK01	Power Switch Cover	1
A-020	02015SC-7113	Hex.Socket Bolt(M4*L10)	2
A-021	05009SW-1111	Washer (@4-L)	2
A-022	02028SW-9115	Spring Washer (@4)	2
A-023	01002LA-UK01	Leveling Base Ass'Y	4
A-024	01004SC-UK01	Hex. Bolt (M20*L60)	4
A-025	02036SN-1211	Hex. Nut (M20-No2)	4
A-026	02058PR-UK06	Body Side Cover	2
A-027	02044SC-3123	Truss Screw (M5*L8)	12
A-028	02043RB-W121	Body Support Rubber Cap	4
A-029	02101ET-UK01	Brand Mark	1
A-031	02097ET-B001	Model Name Plate	1
A-034	02010SC-3123	Truss Screw (M4*L8)	4
A-035	08000102UK61	Model Mark (B-UK606-45)	1
	08000103UK61	Model Mark (B-UK906-45)	
	08000104UK61	Model Mark (B-UK1206-45)	
	08000105UK61	Model Mark (B-UK1506-45)	
A-037	08091SC-7113	Hex. Socket Bolt (M6*L20)	16
A-038	16014SW-4115	Spring Washer (@6)	16
A-039	08057SW-1111	Washer (@6)	16
A-040	14003SC-4113	Hex. Socket Bolt (M8*L25)	16
A-041	15095SW-3115	Spring Washer (@8)	16
A-042	08041SW-1111	Washer (@8-S)	16
A-043	02000100T000	Magnetic Switch Set	1
A-044	02000400T000	Cable Grand (Dacl-11)	1
A-046	02000700T000	Push B/T Switch	1
A-047	02000910T000	Magnetic S/W Fixed Bracket	1
A-048	02001100T000	Switch Plate	1
A-049	02001200T000	Resister 5/20W (Ce)	1
A-050	02001300T000	Bracket Stopper (Ce)	2
A-053	02105800E040	Magnetic - Emt24 Trans	1
A-054	02106100U060	Emt24 Trans Output - Emergen	1
A-056	05000210T000	Transformer (Emt25V) 1A/25.5V	1
A-057	07000100U000	Main Switch Box	1

Ref. No	Part No.	Part Names	Q'ty
A-059	02010SC-3123	Truss Screw (M4*L8)	8
A-060	02000600T000	Cable Grand (Dapg-36)	1
A-061	02105700U020	I/O Switch Connect Cable	1
A-062	02105600U040	I/O S/W - Magnetic Contactor	1
A-063	01000100UK61	Beam & Body Ass'Y (Uk1206-45)	1
A-064	01000200UK60	Body Front Cover (A)	1
A-065	01000300UK60	Body Front Cover (B)	1
A-066	01000400UK00	Body Front Cover (C)	2
A-067	01000500UK60	Body Front Cover (D)	1
A-068	01000600UK00	Body Front Cover (E)	1
A-069	01001500UK60	Body Front Cover (F)	1
A-070	01000800UK60	Body Inside Cover (A)	1
A-071	10000110U060	Body Inside Cover (B)	1
A-072	01001600UK60	Beam Bracket Cover (R)	1
A-073	01001700UK60	Beam Bracket Cover (L)	1
A-074	02054PR-A001	Main Motor Pulley Cover	1
A-075	02044SC-3123	Truss Screw (M5*L8)	1
A-076	02001500U000	Jump Smps (Mrk0R4-H)	1
A-077	02106300U000	Sh-63	1
A-078	01000100UH80	Hammer Caster Set (Urethane)	4

B

Work Table

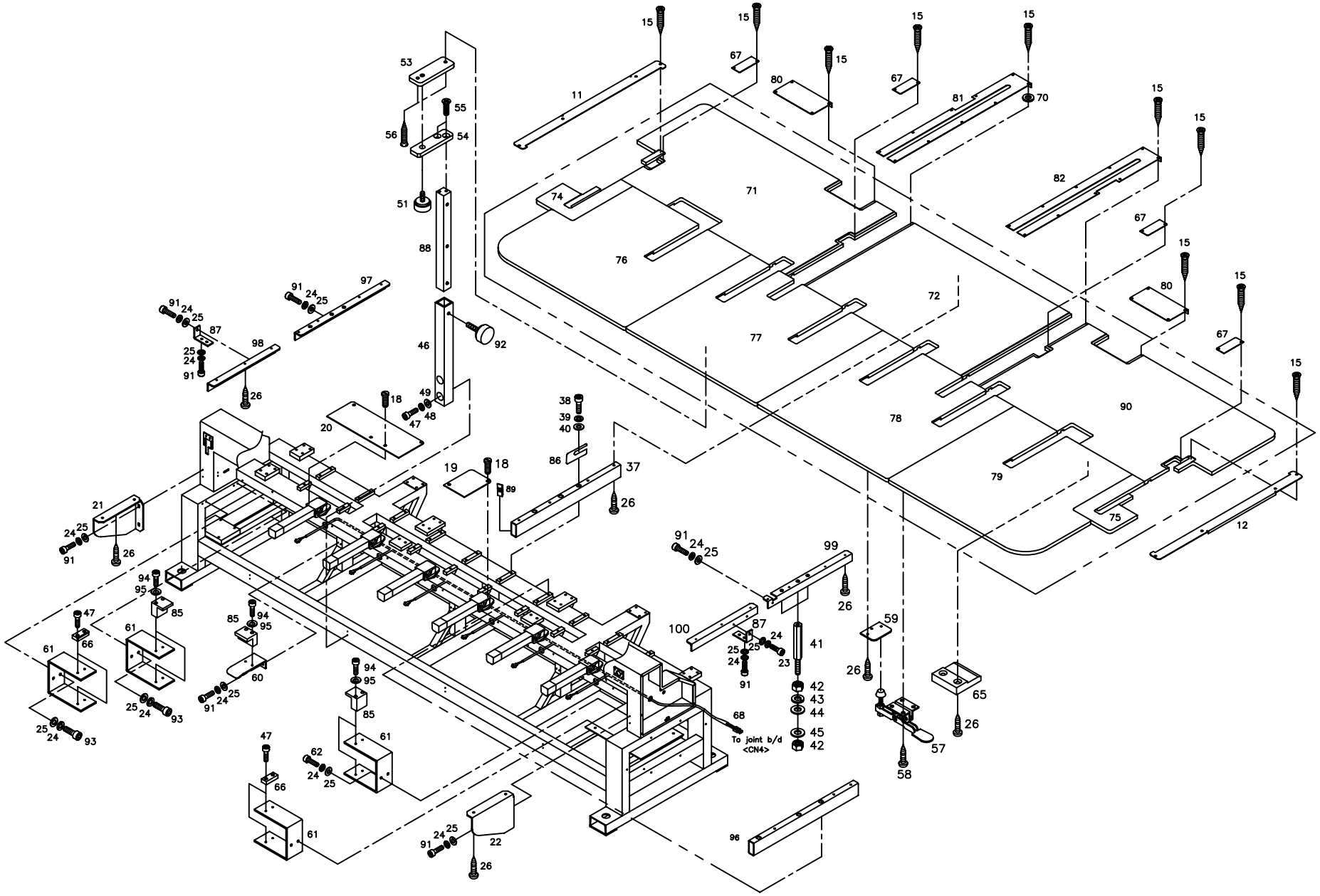

Ref. No	Part No.	Part Names	Q'ty
B-011	17010LA-UK06	Y-Lm Guide Cover (L)	1
B-012	17012LA-UK06	Y-Lm Guide Cover (R)	1
B-015	08101SC-8329	Tapping Screw (M3*L16)	44
B-018	02030SC-T121	Bed Cover Screw(9/64" 40)	14
B-019	16016PR-UK01	Gear Cover	4
B-020	16018PR-UK01	Mes Cam Driving Box Cover	1
B-021	16020PR-UK01	Front Table Support (L)	1
B-022	16025PR-UK01	Front Table Support (R)	1
B-024	18048SW-3115	Spring Washer (@5)	34
B-025	16018SW-1111	Washer (@5)	34
B-026	16009SC-8330	Tapping Screw (M6*L20)	83
B-037	17062AD-UK06	Table Supporter (C)	10
B-038	16009SC-4113	Hex.Socket Bolt(M10*L25)	30
B-039	16029SW-3115	Spring Washer (10@)	30
B-040	01007SW-1111	Washer (10@)	30
B-041	16021CW-A001	Table Support Stud	6
B-042	04032SN-A001	Hex. Nut (M8-No2)	12
B-043	15095SW-3115	Spring Washer (@8)	6
B-044	04030SW-A001	Stud Bolt Washer(L) (@8)	6
B-045	04029SW-A001	Stud Bolt Washer(S) (@8)	6
B-046	16052AD-UK01	Table Support Guide	4
B-047	02015SC-7113	Hex.Socket Bolt(M4*L10)	8
B-048	02028SW-9115	Spring Washer (@4)	8
B-049	05009SW-1111	Washer (@4-L)	8
B-051	17062SC-UK01	Table Support Stopper Screw	4
	17063SC-UK01	Table Support Stopper Screw	4
B-053	16061PR-UK01	Table Support Plate (A)	4
B-054	16058AD-UK01	Table Support Plate (B)	4
B-055	15089SC-7119	C.S Screw (M4*L12)	8
B-056	08101SC-8329	Tapping Screw (M3*L16)	8
B-057	16067ET-UK01	Table Toggle Clamp	10
B-058	19002SC-1330	Tapping Screw (4*L16-No1)	40
B-059	16065PR-UK01	Clamp Plate	6
B-060	17073PR-UK01	Table Support Angle "F"	3
B-061	17077PR-UK06	Table Fixing Plate	4
B-065	16063PM-UK01	Table Holding Block	12
B-066	17085PM-UK01	Positioning Block	4
B-067	17103LA-UK06	Belt Tension Adjusting Cover	4
B-068	25021EL-UK06	Cable (25-21)	1
B-070	10000310A000	Washer T=0.3,0.5,0.8,1.2,1.6	54

Ref. No	Part No.	Part Names	Q'ty
B-071	05000100UK60	Fixed Table "A"	1
B-072	05000200UK60	Fixed Table "B"	1
B-074	05000400UK60	Fixed Table "D"	1
B-075	05000500UK60	Fixed Table "E"	1
B-076	05000600UK60	Table "A"	1
B-077	05000700UK60	Table "B"	1
B-078	05000900UK60	Table "C"	1
B-079	05001000UK60	Table "D"	1
B-080	05000800UK60	Y-Motor Cover	2
B-081	05001100UK60	Table Connecting Cover (L)	1
B-082	05001200UK60	Table Connecting Cover (R)	1
B-085	05008100UK40	Table Fixing Block	7
B-086	05001700U000	Table Support Plate	46
B-087	05001500UK40	Angle Support	4
B-088	05001300U000	Table Support L=263	4
B-089	GP-003757-00	TABLE SUPPORT END CAP	24
B-090	05000310UK60	FIXED TABLE "C"	1
B-091	03016SC-4113	HEX. SOCKET BOLT (M5*L15)	26
B-092	17063SC-UK01	TABLE SUPPORT STOPPER SCREW	4
B-093	08076SC-7113	HEX. SOCKET BOLT (M5*L12)	8
B-094	04030MC-4113	HEX.SOCKET BOLT (M4*L30)	14
B-095	18015SW-3111	WASHER (4@)	14
B-096	17105AD-UK06	TABLE SUPPORT D	2
B-097	05010100U000	TABLE SUPPORTER (A1) L=628	1
B-098	05010200U000	TABLE SUPPORTER (A2) L=402	1
B-099	05010300U000	TABLE SUPPORTER (B1) L=628	1
B-100	05010400U000	TABLE SUPPORTER (B2) L=402	1

C

Spool Stand

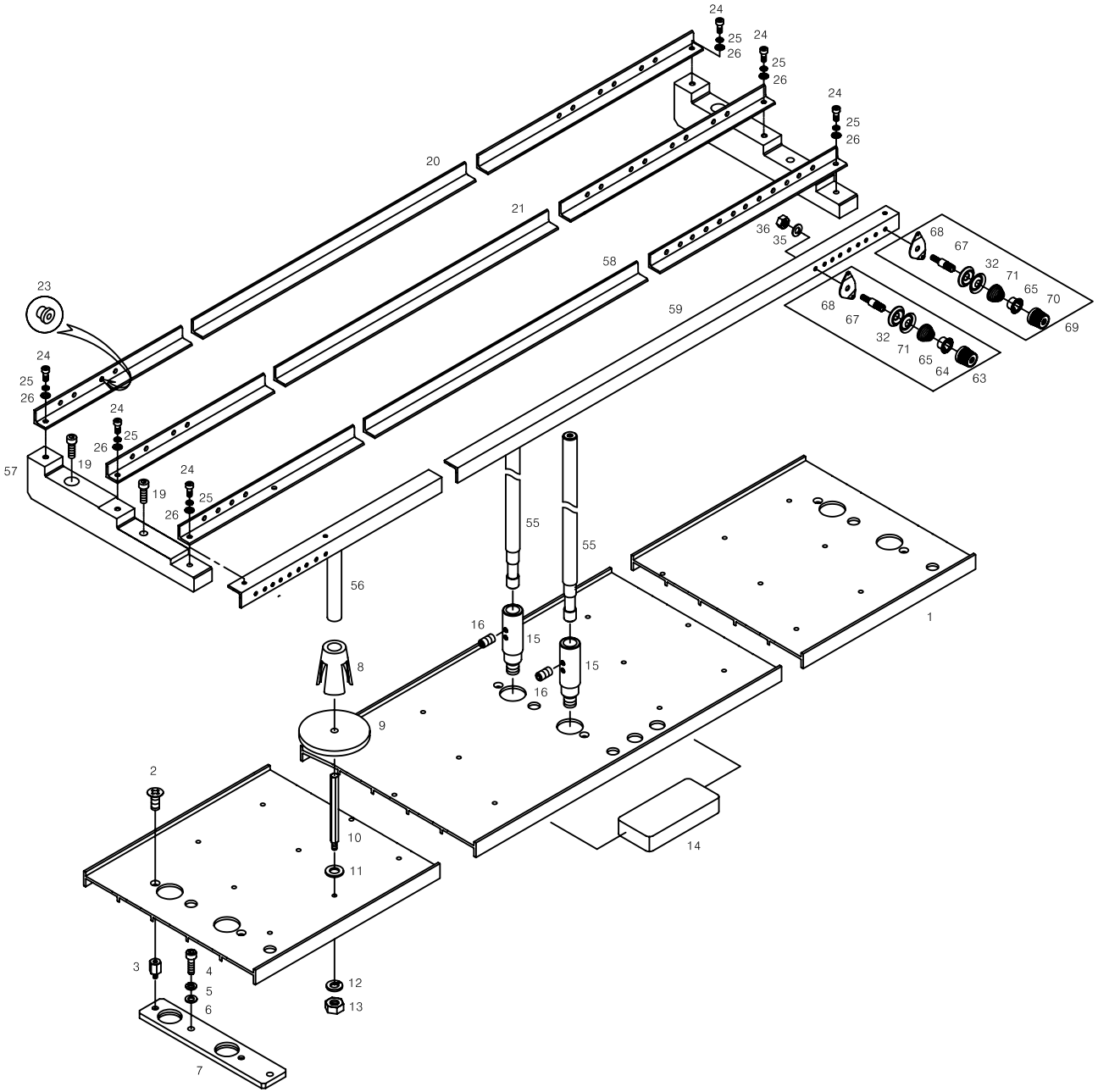

Ref. No	Part No.	Part Names		Q'ty
C-001	05100102UK00	Spool Plate (L=3020)	(6C)	1
	05100103UK00	Spool Plate (L=2950)	(9C)	
	12001AD-UK06	Spool Plate (L=2950)	(12C)	
	12001AD-UK16	Spool Plate (L=2950)	(15C)	
C-002	02002SC-7119	Pluss Screw (M4*L8)		8
C-003	11005CW-UK01	Spool Plate Fixing Bolt M6*L21		8
C-004	03016SC-4113	Hex. Socket Bolt (M5*L15)		8
C-005	18048SW-3115	Spring Washer (@5)		8
C-006	18049SW-3111	Washer (@5)		8
C-007	12004PR-W121	Spool Plate Support Base		4
C-008	12012PM-A001	Spool Holder		72
C-009	12052SF-A001	Spool Sponge		72
C-010	12009SC-A001	Spool Post		72
C-011	18049SW-3111	Washer (@5)		72
C-012	18048SW-3115	Spring Washer (@5)		72
C-013	12010SN-1211	Hex.Nut (M5)		72
C-014	12033RB-UK01	Cushion Rubber		3
C-015	12014SC-A001	Spool Stand Bolt		8
C-016	04014SC-4517	Hex.Socket Set Screw(M5*L5)		16
C-019	03016SC-4113	Hex. Socket Bolt (M5*L15)		8
C-020	05200102UK00	Angle (A) L=3020	(6C)	1
	05200103UK00	Angle (A) L=3020	(9C)	
	12019AD-UK06	Angle (A) L=3020	(12C)	
	12019AD-UK16	Angle (A) L=3020	(15C)	
C-021	05200202UK00	Angle (B) L=3020	(6C)	1
	05200203UK00	Angle (B) L=3020	(9C)	
	12020AD-UK06	Angle (B) L=3020	(12C)	
	12020AD-UK16	Angle (B) L=3020	(15C)	
C-023	12042PM-A001	Eyelet		144
C-024	02015SC-7113	Hex.Socket Bolt(M4*L10)		12
C-025	02028SW-9115	Spring Washer (@4)		12
C-026	06003SW-2111	Washer (@4)		12
C-032	11153PR-B001	Tension Disc @22		144
C-035	18048SW-3115	Spring Washer (@5)		72
C-036	03031SN-A001	Pin. Nut (11/64,N=40)		72
C-055	01001500T000	Spool Stand (L=380)		8
C-055	12015SF-A001	Spool Stand (L=330)		8
C-056	10000100A000	Thread Guide L=200		12
C-057	10600100H000	Thread Angle Frame		4

Ref. No	Part No.	Part Names		Q'ty
C-058	05200104UK60	Angle "C" (L=3020)	(6C)	1
	05200303UK00	Angle "C" (L=3020)	(9C)	
	05200105UK60	Angle "C" (L=3020)	(12C)	
	05200312UK00	Angle "C" (L=3020)	(15C)	
C-059	05200214UK60	Angle "D" (L=3020)	(6C)	1
	05200403UK00	Angle "D" (L=3020)	(9C)	
	05200215UK60	Angle "D" (L=3020)	(12C)	
	05200412UK00	Angle "D" (L=3020)	(15C)	
C-063	10600110B000	SUB TENSION ADJUSTING SET		66
C-064	08300600A000	SUB TENSION ADJUSTING NUT (A)		66
C-065	11088PM-A001	TENSION SPRING STOPPER		72
C-067	08301000A000	TENSION ADJUSTING STUD		72
C-068	11162PR-A001	TENSION PLATE		72
C-069	10600210B000	SUB TENSION ADJUSTING SET	(black)	6
C-070	10600610A000	SUB TENSION ADJUSTING NUT (B)	(black)	6
C-071	08301100A000	TENSION SPRING		72

D

Main Drive System

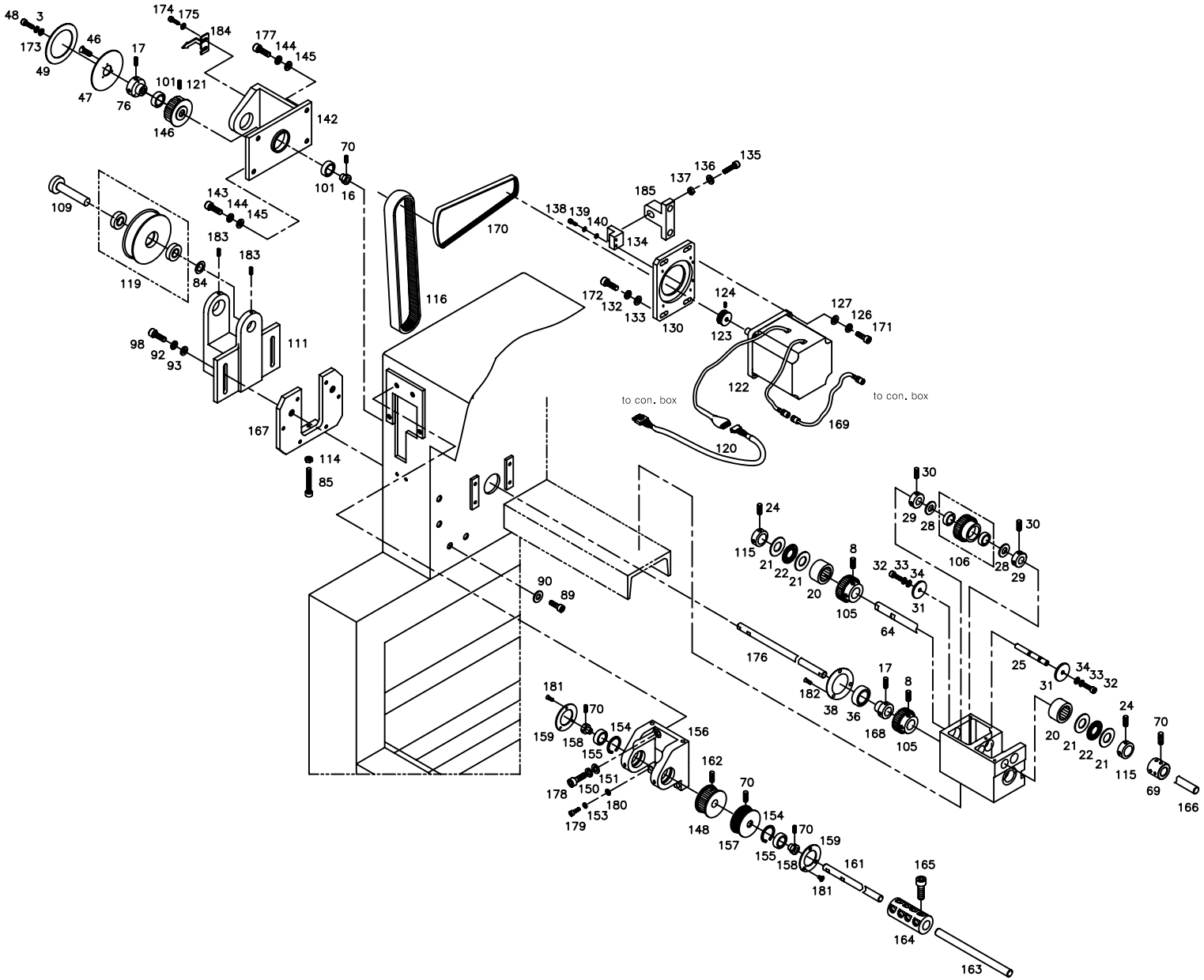

Ref. No	Part No.	Part Names	Q'ty
D-003	15095SW-3115	Spring Washer (@8)	11
D-008	04012AF-A001	Hook Shaft Bush Screw	8
D-016	14058CW-A001	Collar "A"	1
D-017	14060AF-4517	Hex.Socket Screw(M6*L6)	4
D-020	04027BR-A001	Needle Bearing (Hmk1515)	2
D-021	08028BR-A001	Thrust Washer (As 1528)	4
D-022	08027BR-A001	Thrust Bearing (Ntb 1528)	2
D-024	04016AF-A001	Cam Collar Screw	4
D-025	13041SH-UK01	Middle Shaft	1
D-028	12019BR-T121	Fiber Washer R-Tw1020	2
D-029	13038CW-UK01	Collar "C"	2
D-030	03022SC-4517	Hex. Socket Set Screw(M4*L5)	4
D-031	08053PR-A001	Lever Washer	2
D-032	02023SC-7113	Hex. Socket Bolt (M4*L8)	2
D-033	02028SW-9115	Spring Washer (@4)	2
D-034	05009SW-1111	Washer (@4-L)	2
D-036	04026BR-A001	Ball Bearing 6003Z	1
D-038	04039PR-A001	Bearing Cover	1
D-047	13053PR-UK01	Angle Plate Base	1
D-048	14006SC-7113	Hex.Socket Set Screw(M8*L15)	1
D-049	13054ET-UK01	Angle Disk	1
D-064	23003SH-UK06	Low Shaft "A" @15 L=1418	1
D-069	14079CW-UK06	Lower Shaft Coupling	1
D-070	14060AF-4517	Hex.Socket Screw(M6*L6)	4
D-076	13107CW-UK01	Collar	1
D-084	13106PR-UK01	Idler Spacer	1
D-085	14063SC-A001	Tension Control Bolt (M6*L40)	2
D-086	18015SW-3111	Washer (4@)	1
D-089	16059SC-7113	Hex.Socket Bolt (M6*L12)	2
D-090	08057SW-1111	Washer (@6)	8
D-092	15095SW-3115	Spring Washer (@8)	15
D-093	08041SW-1111	Washer (@8-S)	15
D-098	14027SC-4113	Hex.Socket Bolt (M8*L30)	3
D-101	01029BR-A001	Ball Bearing (6004Zz)	4
D-102	14019SR-4013	C-Ring @42	2
D-103	14013CS-E131	Upper Shaft Support Bracket	1
D-105	13032GA-UK06	Index Shaft Gear Uk06	2
D-106	13034GA-UK06	Middle Shaft Gear Uk06	1
D-106	13036BR-UK01	Needle Bearing (63800Zz)	2
D-109	13120CW-UK01	Idler Shaft	1

Ref. No	Part No.	Part Names	Q'ty
D-111	13118CS-UK01	Idler Support Bracket	1
D-114	13042SN-1111	Hex.Nut (M6*T5-R)	2
D-115	03704900A000	Cam Shaft Collar	2
D-116	03000200U000	Timing Belt (25-S5M*L1025)	1
D-119	03000300U000	Idler	1
D-119	13026BR-T121	Needle Bearing (6002Z)	2
D-120	02106500U040	Sh-65-2	1
D-121	14061AF-4517	Hex.Socket Screw(M8*L8)	8
D-122	03000400U000	Main Motor (Xp50B07050Dxe92)	1
D-123	03100400U000	Main Motor Pulley	1
D-124	04014SC-4517	Hex.Socket Set Screw(M5*L5)	2
D-126	18048SW-3115	Spring Washer (5@)	4
D-127	18049SW-3111	Washer (@5)	4
D-130	03006400U000	Motor Fixing	1
D-132	16014SW-4115	Spring Washer (@6)	4
D-133	08057SW-1111	Washer (@6)	4
D-134	03000900U000	Tension Adjusting Block	1
D-135	14063SC-A001	Tension Control Bolt (M6*L40)	1
D-136	08057SW-1111	Washer (@6)	1
D-137	08058SN-1311	Hex. Nut (M6-No3)	1
D-138	08062SC-7113	Hex. Socket Bolt (M5*L20)	2
D-139	18048SW-3115	Spring Washer (5@)	2
D-140	18049SW-3111	Washer (@5)	2
D-142	03012100U000	Low Shaft Support Bracket	1
D-143	08091SC-7113	Hex. Socket Bolt (M6*L20)	2
D-144	16014SW-4115	Spring Washer (@6)	4
D-145	08057SW-1111	Washer (@6)	4
D-146	03000130U000	Index Timming Pulley	1
D-148	03000120U000	Top Shaft Timming Pulley	1
D-150	01008SW-9115	Spring Washer(@10)	2
D-151	01007SW-1111	Washer (10@)	2
D-153	03026SW-9115	Spring Washer (@6)	2
D-154	03010SR-4013	C-Ring (@47)	2
D-155	01001100H000	Ball Bearing (6005Zz)	2
D-156	03101300U000	Upper Shaft Support Bracket	1
D-157	03010800U000	Top Shaft Pulley	1
D-158	03005210H000	Collar "A"	2
D-159	03101400U000	Upper Shaft Support Cover	2
D-161	03000100UK60	Top Shaft "A" (@20, L1505.5)	1
D-162	14061AF-4517	Hex.Socket Screw(M8*L8)	8

D

Main Drive System

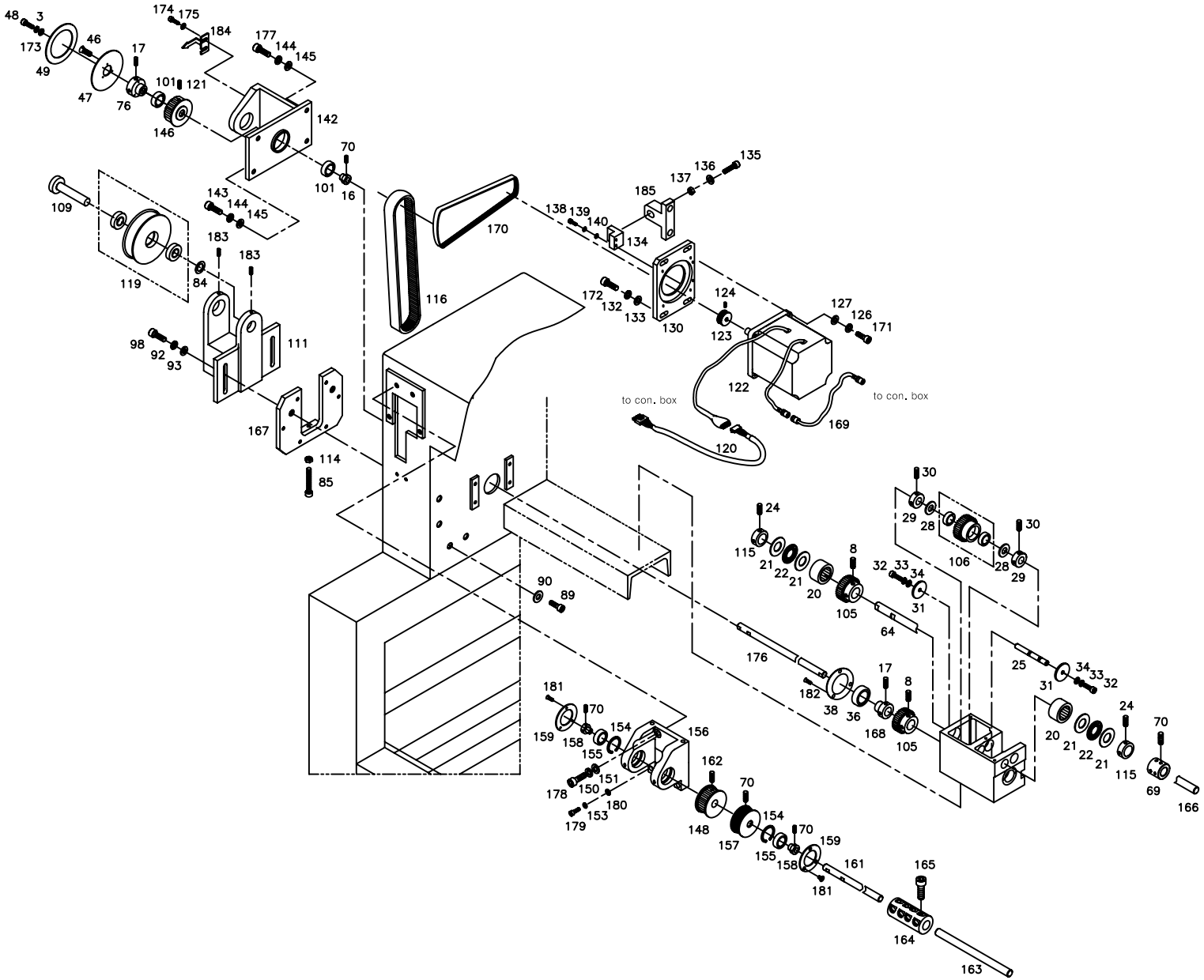

Ref. No	Part No.	Part Names	Q'ty
D-163	03000200UK60	Top Shaft "B" (@20, L1800)	1
D-164	03006720HDK0	Coupling @20	1
D-165	08091SC-7113	Hex. Socket Bolt (M6*L20)	4
D-166	03000300UK60	Low Shaft B (@15, L1385)	1
D-167	13123CW-E121	Idelr Plate	1
D-168	01102000B000	Bearing Bushing	1
D-169	02106400U060	Cable (Sh-64-4)	1
D-170	03100700UH80	MAIN DRIVING BELT 200J	1
D-171	08062SC-7113	HEX. SOCKET BOLT (M5*L20)	4
D-172	08091SC-7113	HEX. SOCKET BOLT (M6*L20)	4
D-173	04029SW-A001	STUD BOLT WASHER(S) (@8)	11
D-174	02015SC-7113	HEX.SOCKET BOLT(M4*L10)	2
D-175	02028SW-9115	SPRING WASHER (@4)	2
D-176	03100600UK60	INDEX SHAFT (@15*L537)	1
D-177	06025MC-7113	HEX.SOCKET BOLT(M6*L25)	2
D-178	08087SC-7113	HEX. SOCKET BOLT (M8*L25)	2
D-179	14046SC-7113	HEX.SOCKET BOLT (M6*L30)	2
D-180	08057SW-1111	WASHER (@6)	2
D-181	22006SC-7113	HEX. SOCKET BOLT (M3*L8)	6
D-182	21002SC-8119	PLUS SCREW (M3*L8)	3
D-183	14060AF-4517	HEX.SOCKET SCREW(M6*L6)	2
D-184	03012210U000	INDICATOR	1
D-185	03000900U060	TENSION ADJUSTING BLOCK	1

Ref. No	Part No.	Part Names	Q'ty

Bed I

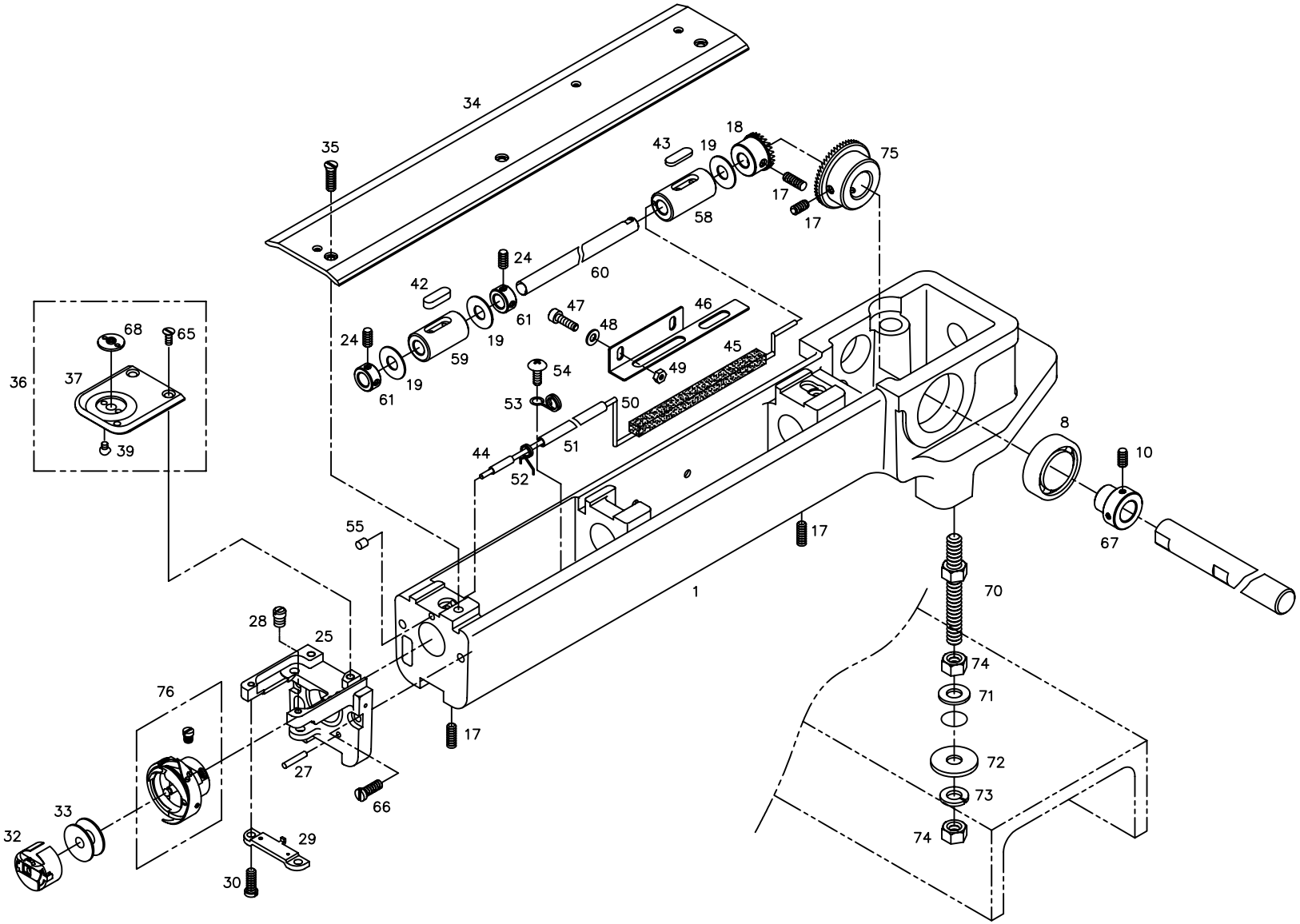
34
35
43
19
18
75
17
17
58
24
60
42
47
46
48
68
65
24
61
19
59
19
45
36
37
54
49
61
53
50
39
8
10
44
51
52
55
17
67
1
70
28
25
74
76
71
17
72
27
73
66
33
32
29
74
30

Ref. No	Part No.	Part Names	Q'ty
E-001	04001CS-UK01	Bed "A"	5
E-008	04026BR-A001	Ball Bearing 6003Z	6
E-010	04016AF-A001	Cam Collar Screw	12
E-017	04012AF-A001	Hook Shaft Bush Screw	36
E-018	04019GA-UK01	Hook Shaft Gear	6
E-019	02004BR-T121	Hook Shaft Bearing Washer	18
E-024	08113SC-A001	Collar Screw	24
E-025	02007CL-T121	Needle Plate Bracket	6
E-027	02009PI-T121	Spring Pin	12
E-028	04026SC-T121	Needle Plate Pin	6
E-029	02010CL-T121	Rotary Hook Support	6
E-030	02011SC-3125	Rotary Hook Support Screw	12
E-032	04034AF-A001	Bobbin Case Set	6
E-033	04035AF-A001	Bobbin	6
E-034	04036PR-UK01	Bed Cover	6
E-035	02030SC-T121	Bed Cover Screw(9/64" 40)	18
E-036	02019BM-T121	Needle Plate Set(Cap)	6
E-037	02019PR-T121	Needle Plate(Cap)	6
E-039	04007SC-A001	Cushion Cover Screw (M3*L2.3)	12
E-042	32043SF-T121	Front Bushing Felt	6
E-043	18039SF-UK01	Felt	6
E-044	32045CW-T121	Oil Hose Pin	6
E-045	18041SF-UK01	Bed Felt	6
E-046	32040PR-T121	Bed Felt Cover	6
E-047	02023SC-7113	Hex. Socket Bolt (M4*L8)	12
E-048	02063SW-1111	Washer(@4)	12
E-049	05016SN-1211	Hex.Nut (M4)	12
E-050	18044ET-UK01	Wick L=400	6
E-051	18045ET-UK01	Oil Hose L=160	6
E-052	32046SP-T121	Holder For Oil Hose	6
E-053	32021SP-T121	Needle Bar Hose Holder "B"	6
E-054	28021SC-3123	Truss Screw (M3*L4)	6
E-055	32047RB-T121	Oil Rubber Cap	6
E-058	01102200U000	Hook Shaft Rear Bushing	6
E-059	02000300T000	Hook Shaft Front Bushing	6
E-060	02100300U000	Hook Shaft	6
E-061	03707300A000	Solenoid Collar	12
E-065	04004AF-A001	Needle Plate Screw	12
E-066	04037SC-A001	Picker Bracket Screw(R)	12
E-067	01102000B000	Bearing Bushing	6

Ref. No	Part No.	Part Names	Q'ty
E-068	02022CW-T121	NEEDLE GUIDE PLATE(FLAT)	6
E-070	04028SC-UK01	STUD BOLT (M10*P1.25*L69)	18
E-071	04013PR-B001	WASHER (3.2T,@10)	18
E-072	04014PR-B001	WASHER (2T,@10)	18
E-073	16029SW-3115	SPRING WASHER (10@)	18
E-074	04032SN-UK01	HEX. NUT (M10*P1.25)	36
E-075	01101700U000	LOW SHAFT GEAR	6
E-076	04033AF-D002	Rotary Hook Set	6

Bed II

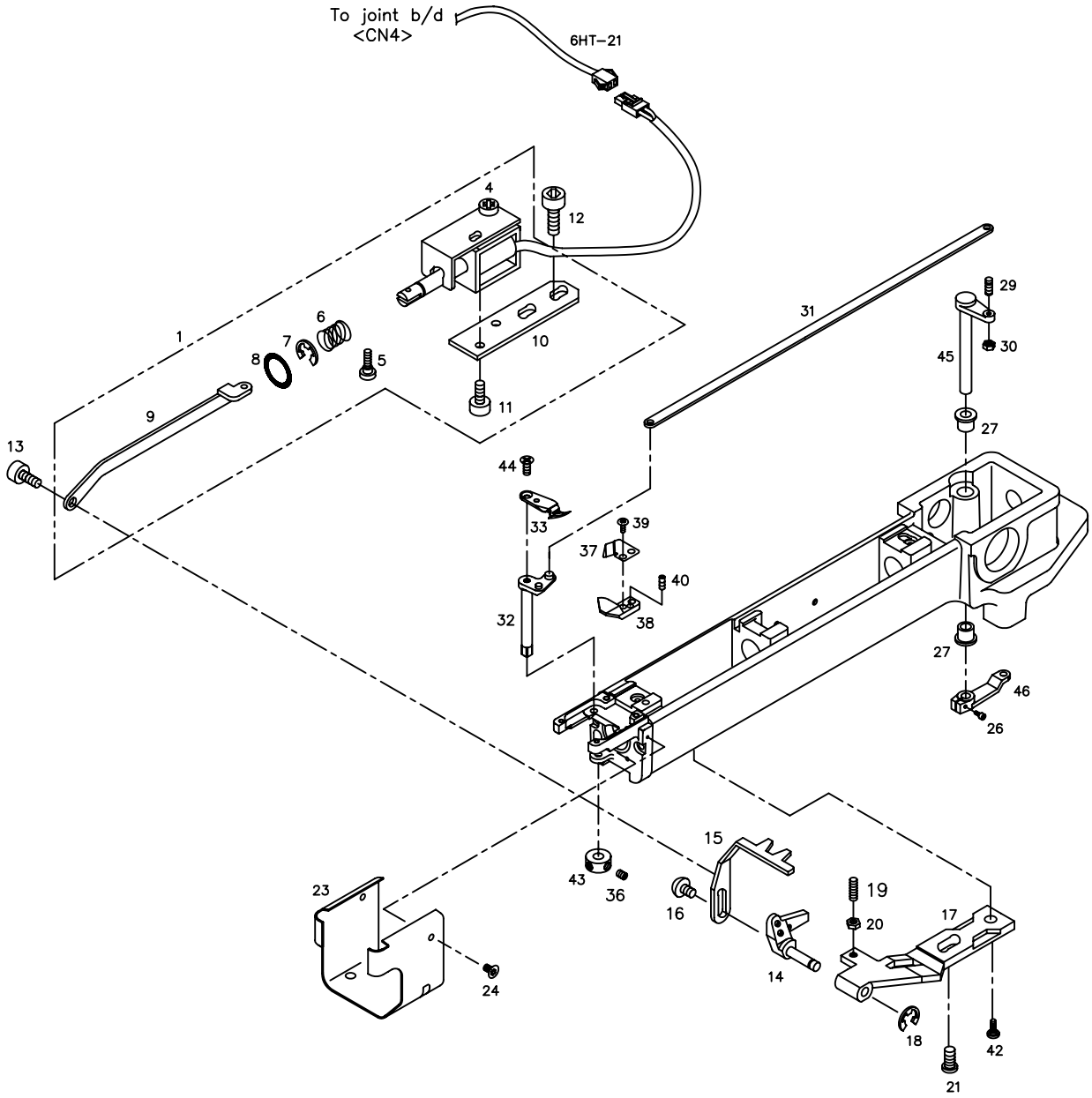
To joint b/d
<CN4>
6HT-21
1
4
5
6
7
8
9
10
11
12
13
14
15
16
17
18
19
20
21
23
24
26
27
29
30
31
32
33
36
37
38
39
40
42
43
44
45
46

Ref. No	Part No.	Part Names	Q'ty
F-001	10009EL-A004	Picker Sol. Set	6
F-004	28021SC-3123	Truss Screw (M3*L4)	12
F-005	10021SC-A001	Sol. Stud Screw	6
F-006	10011SP-A001	Sol. Spring	6
F-007	13044SR-4013	E-Ring (@4)	6
F-008	10012RB-A001	Cushion Washer	6
F-010	08018CL-T121	Picker Base	6
F-011	06010AF-8118	Plus Screw(M3*L4)	12
F-012	02015SC-7113	Hex.Socket Bolt(M4*L10)	12
F-013	08012CW-T121	Connecting Plate Stud Screw	6
F-014	08018CL-T121	Picker Base	6
F-015	08021PR-T121	Picker	6
F-016	07018SC-8118	Plus Screw (M3*L8)	12
F-017	08013CL-T121	Picker Bracket	6
F-018	15159SR-4013	E-Ring (3@)	6
F-019	10015SC-4215	Plus Screw (M3*L10)	6
F-020	08112SN-A001	Hex. Nut (M3)	6
F-021	08016SC-T121	Plus Screw(15/64*N28)	6
F-023	04038PR-T121	Hook Cover	6
F-024	08014AF-A001	Plus Screw (M3*L8)	12
F-026	02015SC-7113	Hex.Socket Bolt(M4*L10)	6
F-027	07021MP-T121	Lever Shaft Bush	12
F-029	07023CW-T121	Lever Pin "A"	6
F-030	02029SN-9311	Hex. Nut (M4-No2)	6
F-031	07006LA-UK01	Mes Connecting Link	6
F-032	07026FU-T121	Moving Mes Shaft	6
F-033	07028PR-T121	Moving Mes	6
F-036	03022SC-4517	Hex. Socket Set Screw(M4*L5)	12
F-037	07032CL-T121	Fixed Mes	6
F-038	07033PR-T121	Under Thread Presser	6
F-039	07018SC-8118	Plus Screw (M3*L8)	12
F-040	03050SC-4517	Hex. Socket Set Screw (M3*L3)	6
F-042	116410S-8118	Driver Screw 11/64-40,L10	6
F-043	13003000T000	Mes Shaft Collar	6
F-044	08014SC-A001	Plus Screw (M3*L8)	6
F-045	03001100U000	Mes Driving Lever Shaft "A"	6
F-046	02100400U000	Mes Driving Lever	6

Ref. No	Part No.	Part Names	Q'ty

G Thread Cutting Drive System

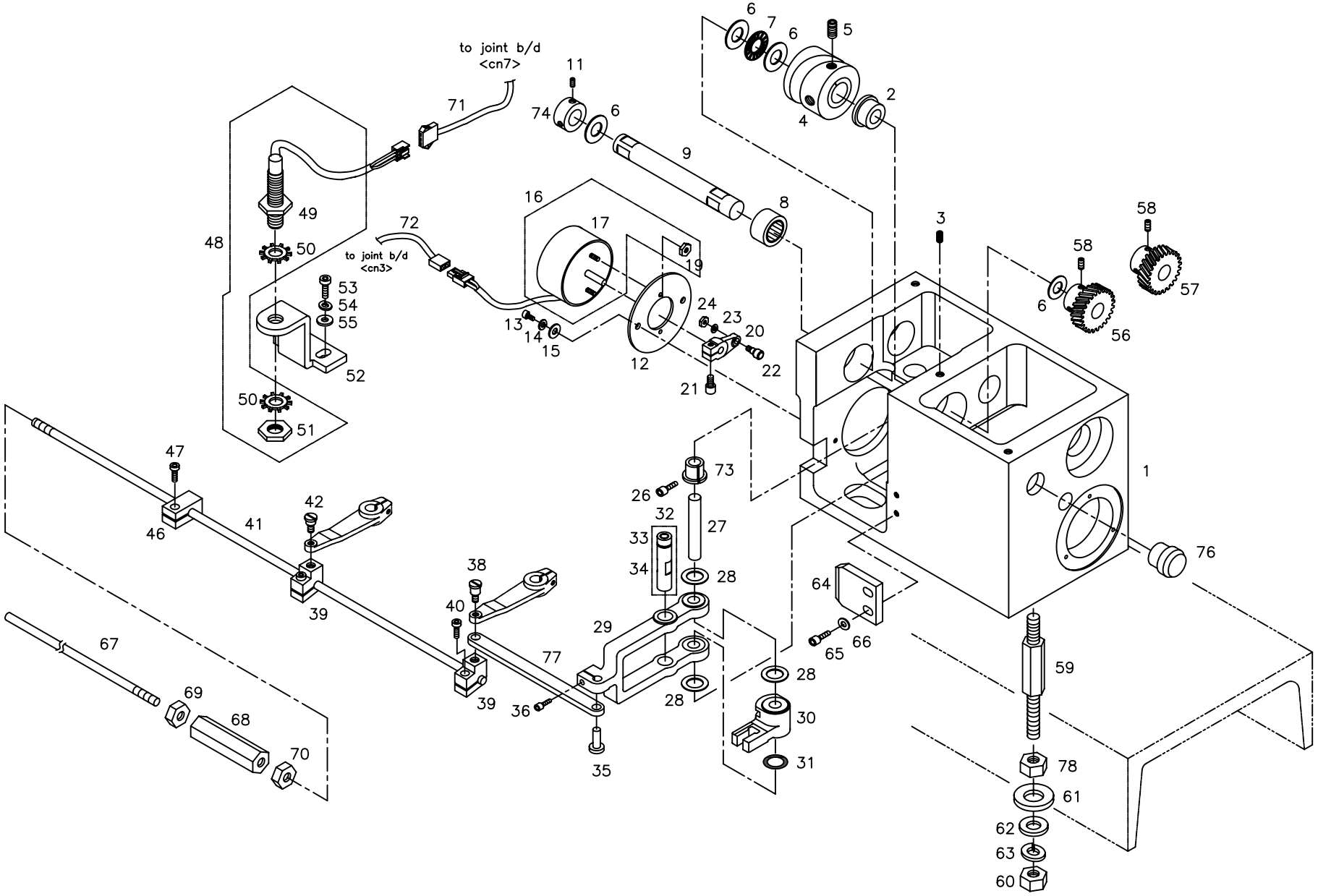

Ref. No	Part No.	Part Names	Q'ty
G-001	08023CS-UK01	Mes Cam Driving Box	1
G-002	08042MP-UK01	Mes Cam Shaft Bush	1
G-003	03022SC-4517	Hex. Socket Set Screw(M4*L5)	1
G-004	07034CM-UK01	Mes Cam	1
G-005	04016AF-A001	Cam Collar Screw	2
G-006	08028BR-A001	Thrust Washer (As 1528)	4
G-007	08027BR-A001	Thrust Bearing (Ntb 1528)	1
G-008	04027BR-A001	Needle Bearing (Hmk1515)	1
G-009	07038CW-UK01	Mes Cam Shaft	1
G-011	04016AF-A001	Cam Collar Screw	4
G-012	07015PR-UK01	Solenoid Plate	1
G-013	02031SC-7113	Hex. Socket Screw(M5*L10)	2
G-014	18048SW-3115	Spring Washer (5@)	2
G-015	18049SW-3111	Washer (@5)	2
G-016	08068EL-UK01	Thread Trimming Solenoid Ass'	1
G-019	11014SN-1211	Hex.Nut (M3-No2)	2
G-020	07017CL-UK01	Solenoid Crank	1
G-021	03071SC-7113	Hex. Socket Bolt (M3*L10)	1
G-022	08048AF-T121	Solenoid Crank Roller	1
G-023	18014SW-3115	Spring Washer (@4-No2)	1
G-024	08050SN-T121	Hex. Nut	1
G-026	02014SC-7113	Hex. Socket Bolt (M4*L5)	1
G-027	07025CW-UK01	Lever Shaft (@8*L70)	1
G-028	07024BR-UK01	Fiber Washer(R-Tw0805)	3
G-029	07028CL-UK01	Mes Driving Lever	1
G-030	07029CL-UK01	Mes Driving Crank	1
G-031	08022RB-T121	O-Ring (@10)	1
G-033	07030AF-UK01	Roller	1
G-034	07026CW-UK01	Roller Shaft	1
G-035	08034CW-UK01	Lever Connecting Pin	1
G-036	04010MC-7113	Hex.Socket Bolt (M4*L10)	1
G-038	08016CW-UK01	Link Stud Bolt	1
G-039	08023CL-UK01	Mes Shaft Cramp	6
G-040	02015SC-7113	Hex.Socket Bolt(M4*L10)	6
G-041	23006SH-UK06	Mes Driving Shaft "A" L=1255	1
G-042	08019CW-UK01	Clamp Stud Bolt	5
G-046	08023CW-A001	Mes Shaft Cramp	1
G-047	02015SC-7113	Hex.Socket Bolt(M4*L10)	1
G-048	08102EL-A001	Zero Point Sensor Ass'Y	1
G-052	08070PR-UK01	Sensor Bracket	1

Ref. No	Part No.	Part Names	Q'ty
G-053	02031SC-7113	Hex. Socket Screw(M5*L10)	2
G-054	18014SW-3115	Spring Washer (@4-No2)	2
G-055	18049SW-3111	Washer (@5)	2
G-056	07041GA-UK01	Gear "A"	1
G-057	07043GA-UK01	Gear "B"	1
G-058	04012AF-A001	Hook Shaft Bush Screw	4
G-059	08025CW-UK01	Box Stud Bolt	3
G-061	04030SW-A001	Stud Bolt Washer(L) (@8)	3
G-062	04029SW-A001	Stud Bolt Washer(S) (@8)	3
G-063	15095SW-3115	Spring Washer (@8)	3
G-064	08021PM-UK01	Lever Stopper	1
G-065	02015SC-7113	Hex.Socket Bolt(M4*L10)	2
G-066	18015SW-3111	Washer (4@)	2
G-067	23007SH-UK06	Mes Driving Shaft "B" L=1255	1
G-068	17051SN-A001	Mes Priving Shaft Joint	1
G-069	13042SN-1111	Hex.Nut (M6*T5-R)	1
G-070	17053SN-1111	Hex. Nut(L) (M6*T5-L)	1
G-071	25039EL-UK06	Cable (25-39)	1
G-072	25023EL-UK06	Cable (25-23)	1
G-073	08203000A000	Take-Up Lever Shaft Bush(L)	1
G-074	03704900A000	Cam Shaft Collar	1
G-076	08071RB-UK01	Thread Driver Box Ruber	1
G-077	03000700TH00	Thread Lever Connect Link	1
G-078	04032SN-A001	Hex. Nut (M8-No2)	6

H

Arm I

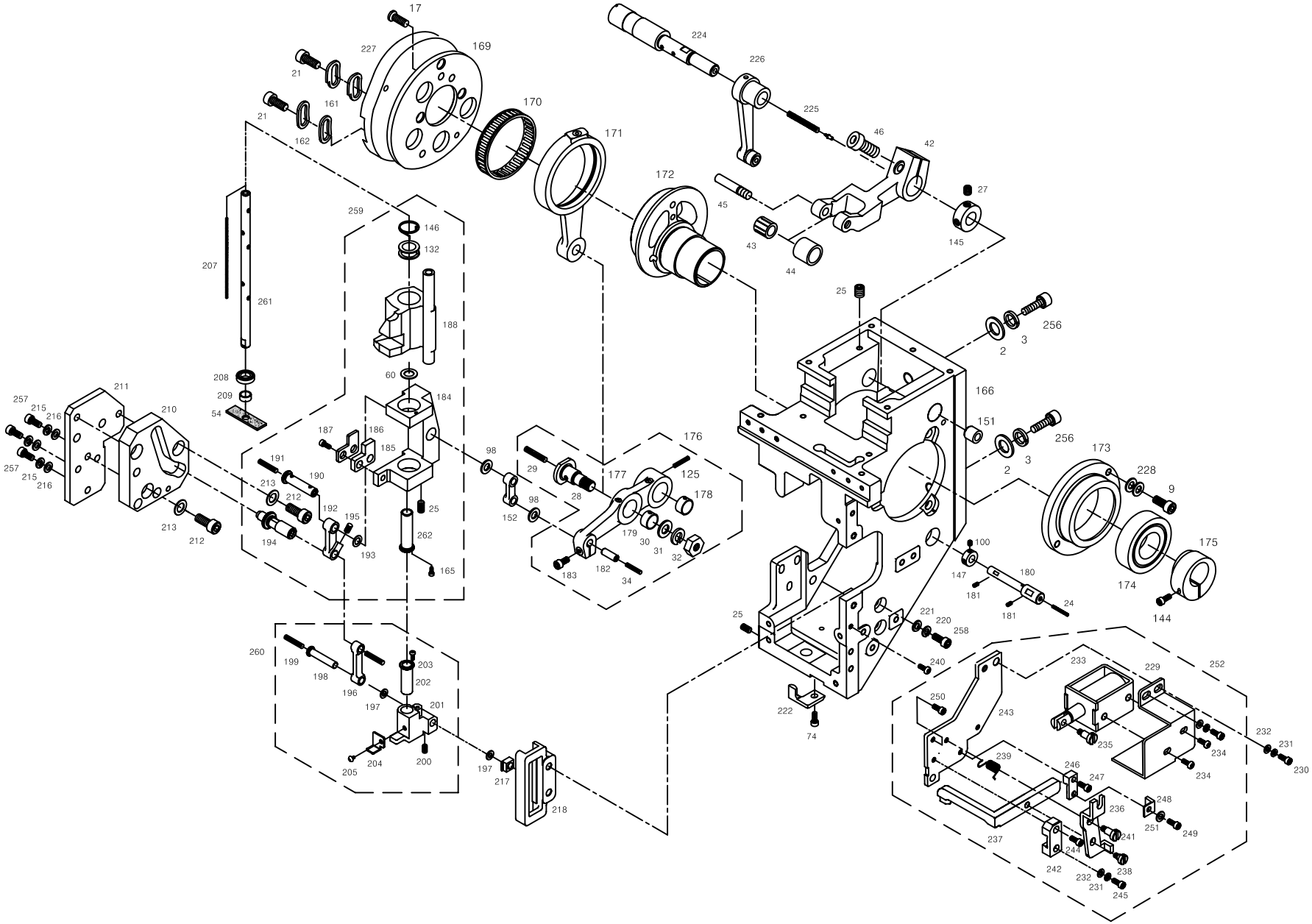
17
227
169
21
161
21
162
170
171
224
226
225
46
42
172
27
45
43
44
145
259
146
132
207
261
188
25
256
2
3
208
209
54
60
184
166
211
257
215
216
210
187
186
185
151
256
2
3
173
228
9
176
191
190
98
29
177
125
178
213
212
192
195
28
25
98
152
179
30
31
32
175
213
212
194
193
262
165
183
182
34
100
147
180
181
181
24
174
144
25
221
220
258
240
260
199
198
196
197
203
202
201
222
74
233
229
252
250
243
232
231
230
235
234
234
239
246
247
248
236
251
249
237
241
244
242
232
231
238
245
205
204
200
197
217
218

Ref. No	Part No.	Part Names	Q'ty
H-002	04029SW-A001	Stud Bolt Washer(S) (@8)	60
H-003	15095SW-3115	Spring Washer (@8)	60
H-009	02031SC-7113	Hex. Socket Screw(M5*L10)	60
H-017	03007SC-A001	Cam Base Screw	18
H-021	02023SC-7113	Hex. Socket Bolt (M4*L8)	12
H-025	03020SC-A001	Drive Pin Screw 11/64,N40,L8	30
H-027	03022SC-4517	Hex. Socket Set Screw(M4*L5)	24
H-028	03023SC-A001	Connecting Rod Stud	6
H-030	03025SW-1211	Washer (@6)	6
H-031	03026SW-9115	Spring Washer (@6)	6
H-032	03027SN-A001	Stud Nut	6
H-042	07018CA-UK01	Take-Up Driving Lever "B"	6
H-043	04021BR-T121	Neddle Bearing Kt367N (Iko)	6
H-044	04020AF-T121	Roller For Take-Up Gear-B	6
H-045	04019CW-T121	Pin Stud Screw	6
H-046	02015SC-7113	Hex.Socket Bolt(M4*L10)	6
H-054	03053SF-A001	Felt "B"	6
H-060	03048SW-A001	Reciprocator Washer	6
H-074	03057SC-A001	Head Rail Holder Screw	18
H-098	03034SW-A001	Reciprocator Washer	18
H-100	04012AF-A001	Hook Shaft Bush Screw	12
H-132	03046CW-B001	Jump Spring Guide	6
H-144	05015MC-4113	Hex. Socket Bolt (M5*L15)	6
H-145	03302100A000	Pin Collar	6
H-146	03045SP-B001	Jump Spring	6
H-147	01101300A000	Hook Shaft Collar	6
H-151	03301200A000	Bushing	6
H-152	03003200A000	Needle Bar Drive Rink	6
H-161	03300100A000	Cam Washer A	12
H-162	03300200A000	Cam Washer B	12
H-165	03006MC-3123	Truss Screw (M3*L6)	6
H-166	03300100U000	Arm	6
H-169	03300210H000	Take-Up Lever Cam Base	2
H-170	03302900H000	Needle Case (Kt-42469)	2
H-171	03303000H000	Connecting Rod	2
H-172	03300310H000	Needle Bar Driving Cam @20	2
H-173	03303100H000	Bearing Case A @20	6
H-174	01001100H000	Ball Bearing (6005Zz)	6
H-175	03000110H000	Cam Tightening Collar (@20)	6
H-176	03313200H000	Needle Bar Drive Lever	6

Ref. No	Part No.	Part Names	Q'ty
H-177	03000200A000	NEEDLE BAR DRIVE LEVER	6
H-178	03307200A000	Needle Driving Lever Bushing	6
H-179	03307300A000	Needle Driving Lever Bushing	6
H-180	03301800U000	Needle Bar Drive Pin	6
H-181	03020SC-A001	Drive Pin Screw 11/64,N40,L8	12
H-182	03303300H000	Lever Pin	6
H-183	02015SC-7113	Hex.Socket Bolt(M4*L10)	6
H-184	03600110H000	Needle Driving Shaft Driver	6
H-185	03600300H000	Reciprocator Stopper	6
H-186	03600600H000	Stopper Bracket	6
H-187	03046SC-8118	Plus Screw (M3*L5)	12
H-188	03600210H000	Needle Bar Reciprocator	6
H-190	03600500H000	Driver Pin	6
H-192	03007600H000	Foot Drving Connect Link A	6
H-193	03034SW-A001	Reciprocator Washer	6
H-194	03302800H000	Presser Foot Hinge Pin Ass'Y	6
H-195	08113SC-A001	Collar Screw	6
H-196	03007700H000	Foot Drving Connect Link B	6
H-197	03034SW-A001	Reciprocator Washer	4
H-198	03007800H000	Presser Foot Reciprocator Pin	6
H-200	08113SC-A001	Collar Screw	12
H-201	03001510H000	Presser Foot Reciprocator	6
H-202	03001610H000	Presser Foot Bush @20	6
H-203	09005SC-3123	Truss Screw (M3*L6)	6
H-204	03001710H000	Presser Foot Stopper	6
H-205	08006SC-8118	Plus Screw (M3*L5)	6
H-207	03008000H000	Ball Bearing 6800	6
H-208	03008000H000	Ball Bearing 6800	6
H-209	03008100H000	Bearing Bushing For Shaft	6
H-210	03300810H000	Presser Foot Driver Cam	6
H-211	03303400H000	Presser Foot Drving Cam Base	6
H-212	02023SC-7113	Hex. Socket Bolt (M4*L8)	18
H-213	06003SW-2111	Washer (@4)	18
H-215	18014SW-3115	Spring Washer (@4-No2)	18
H-216	18015SW-3111	Washer (4@)	18
H-217	03303500H000	Presser Foot Guide Block	6
H-218	03303600H000	Reciprocator Guide	6
H-220	18014SW-3115	Spring Washer (@4-No2)	12
H-221	18015SW-3111	Washer (4@)	12
H-222	03056CL-B001	Head Rail Holder	6

H

Arm I

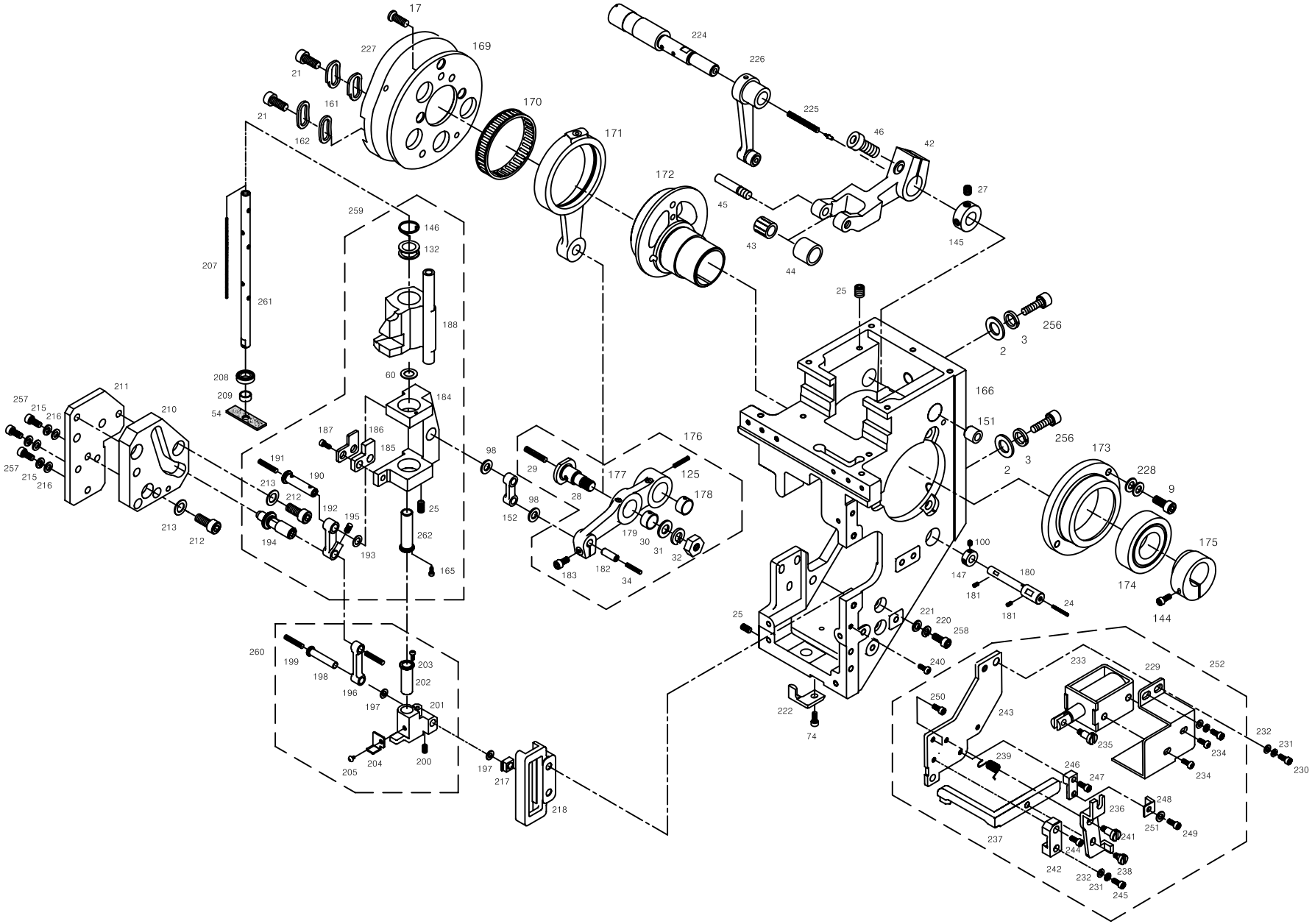
17
227
169
21
161
21
162
170
171
224
226
225
46
42
172
27
45
43
44
145
259
146
132
207
261
188
25
256
2
3
208
209
54
60
184
166
211
257
215
216
210
187
186
185
151
256
2
3
173
228
9
176
191
190
98
29
177
125
178
213
212
192
195
28
25
98
152
179
30
31
32
175
213
212
194
193
262
165
183
182
34
100
147
180
181
181
24
174
144
25
221
220
258
240
260
199
198
196
197
203
202
201
222
74
233
229
252
250
243
232
231
230
235
234
234
239
246
247
248
236
251
249
237
241
244
242
232
231
238
245
205
204
200
197
217
218

Ref.No	Part No.	PartNames	Q'ty
H-224	03301000B000	Take-Up Lever Drive Pin	6
H-226	03314100A000	Take-Up Lever A	6
H-227	03300720H000	Take-Up Lever Driver Cam (Hb)	6
H-228	02030SW-B001	Braring Case Washer	36
H-229	03303900H000	Solenoid Bracket	6
H-230	04010MC-7113	Hex.Socket Bolt (M4*L10)	12
H-231	18014SW-3115	Spring Washer (@4-No2)	30
H-232	18015SW-3111	Washer (4@)	30
H-233	03304000H000	Upper Thread Holder Solenoid	6
H-234	05007SC-7113	Hex. Socket Bolt (M3*L5)	12
H-235	03304100H000	Upper Thread Holder Stud Screw	6
H-236	03304200H000	Holder Connecting Link	6
H-237	03304300H000	Upper Thread Holder Push Bar	6
H-238	03304400H000	Holder Stud Screw "A"	6
H-239	03304500H000	Upper Holder Return Spring	6
H-240	18033SC-3123	Truss Screw (M5*L6)	6
H-241	03304600H000	Holder Stud Screw "B"	6
H-242	03304800H000	Push Bar Base	6
H-243	03304700H000	Push Bar Base	6
H-244	04010MC-7113	Hex.Socket Bolt (M4*L10)	6
H-245	11029SC-4113	Hex. Socket Bolt (M4*L20)	6
H-246	03305000H000	Push Bar Base	6
H-247	04010MC-7113	Hex.Socket Bolt (M4*L10)	6
H-248	03304910H000	Upper Thread Holder Stopper	6
H-249	11029SC-4113	Hex. Socket Bolt (M4*L20)	6
H-250	11029SC-4113	Hex. Socket Bolt (M4*L20)	6
H-251	06011SW-2111	Washer (@3)	6
H-252	03900010H000	Upper Thread Holder Base Set	6
H-253	15105SC-7113	Hex.Socket Screw (M4*L15)	6
H-254	18014SW-3115	Spring Washer (@4-No2)	6
H-255	18015SW-3111	Washer (4@)	6
H-256	03072MC-4113	HEX. SOCKET BOLT (M8*L28)	18
H-257	15105SC-7113	HEX.SOCKET SCREW (M4*L15)	18
H-258	07016SC-7113	HEX.SOCKET BOLT (M4*L12)	12
H-259	03600010H000	NEEDLE BAR REECIPROCATOR SET	6
H-260	03800010H000	PRESSER FOOT RECIPROCATOR SET	6
H-261	03007900K000	NEEDLE BAR DRIVING SHAFT	6
H-262	03304710A000	NEEDLE BAR DRIVING SHAFT BUSH	6

Ref. No	Part No.	Part Names	Q'ty

H1

Arm II

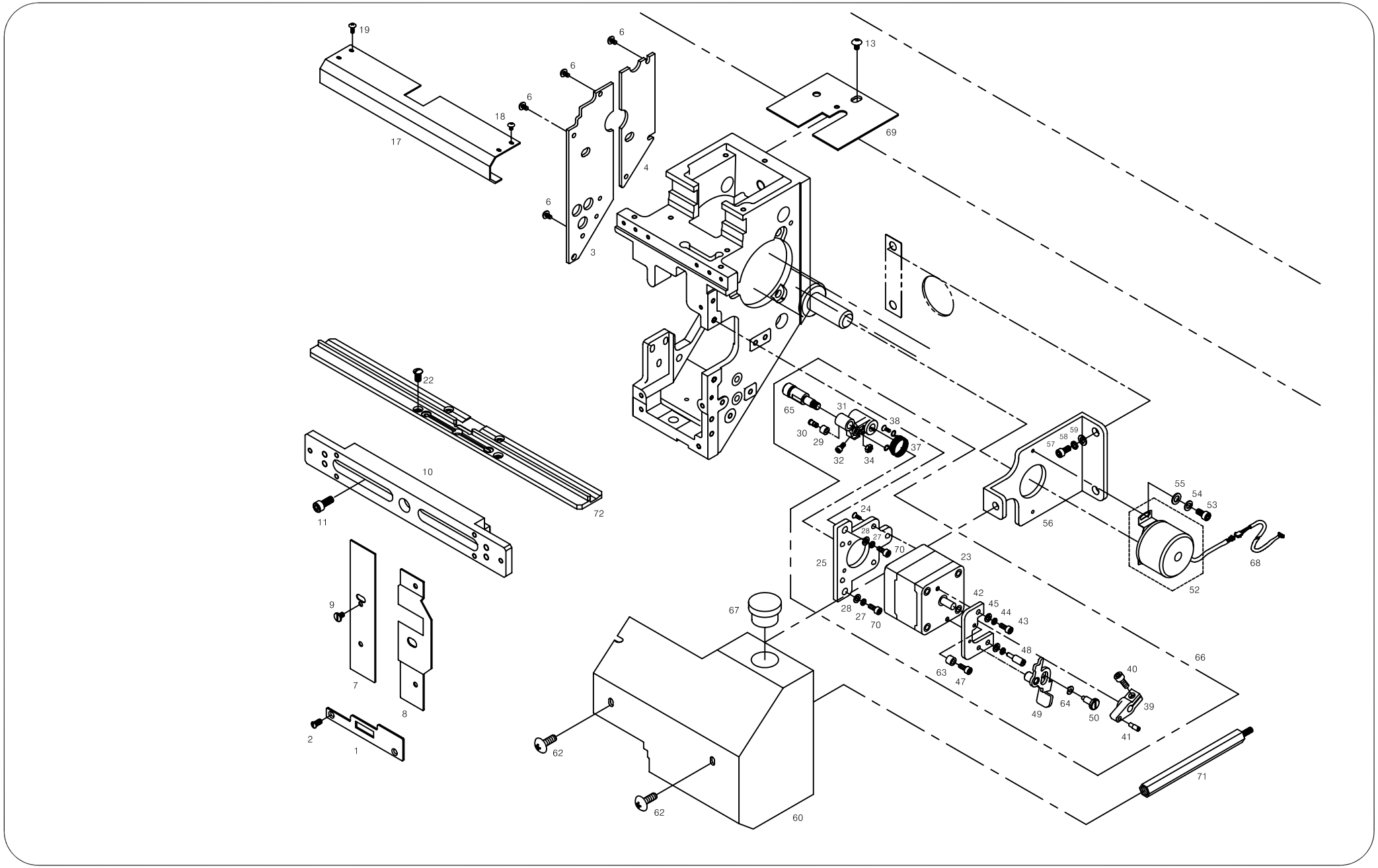
19
6
6
6
18
17
4
3
6
13
69
22
65
31
38
30
29
32
34
37
59
58
57
10
11
72
55
54
53
56
24
28
27
70
25
23
68
52
42
45
44
43
28
27
70
67
48
66
63
47
40
39
9
7
8
64
49
50
41
2
1
62
62
60
71

Ref.No	Part No.	PartNames	Q'ty
H1001	03302610H000	Arm Bearing Guide Plate @20	6
H1002	05062SC-A001	Thread Guide (L) Screw	12
H1003	03302210H000	Side Cover "A" @20	6
H1004	03302310H000	Side Cover "B1" @20	6
H1006	02009SC-A001	Side Cover Screw	36
H1007	03008200H000	Arm Guard Plate "L" @20	6
H1008	03303800H000	Arm Guard Plate "R" @20	6
H1009	03065SC-A001	Guard Plate Screw	24
H1010	03070LM-BE00	Lm Guide Block Set (6C)	6
	03068LM-BB00	Lm Guide Block Set 12C (12C)	
	03068LM-H003	Lm Guide Block Set 15C (15C)	
H1011	03071SC-A001	Hex.Scoket Bolt (M3*L15)	36
H1013	02009SC-A001	Side Cover Screw	6
H1017	12000100FS00	Top Shaft Cover "B"	1
H1018	02009SC-A001	Side Cover Screw	2
H1019	18033SC-3123	Truss Screw (M5*L6)	2
H1022	05041SC-A001	Guide Rail Serew	24
H1023	03410200H000	Jump Motor (103H548-0496)	6
H1024	08014SC-A001	Plus Screw (M3*L8)	24
H1025	03410100H000	Jump Motor Base	6
H1027	18014SW-3115	Spring Washer (@4-No2)	18
H1028	06003SW-2111	Washer (@4)	18
H1029	03410300H000	Jump Crank Stopper	6
H1030	03411400H000	Jump Crank Stopper Stud Screw	6
H1031	03410400H000	Jump Driving Crank	6
H1032	02023SC-7113	Hex.Socket Bolt (M4*L8)	6
H1034	03031SN-A001	Pin. Nut (11/64,N=40)	6
H1037	03410800H000	Jump Return Spring	6
H1038	08006SC-8118	Plus Screw (M3*L5)	12
H1039	03410900H000	Jump Driving Clutch	6
H1040	02023SC-7113	Hex.Socket Bolt (M4*L8)	6
H1041	03411000H000	Jump Driving Clutch Pin	6
H1042	03411100H000	Jump Clutch Base	6
H1043	22006SC-7113	Hex. Socket Set Screw(M3*L8)	6
H1044	11019SW-9115	Spring Washer (3@)	12
H1045	06011SW-2111	Washer (@3)	12
H1047	15105SC-7113	Hex.Socket Screw (M4*L15)	6
H1048	03411600H000	Jump Clutch Stopper Screw	6
H1049	03411200H000	Jump Driving Clutch Lever	6
H1050	03411300H000	Jump Clutch Lever Stud Bolt	6

Ref. No	Part No.	Part Names	Q'ty
H1052	03013EL-T121	Encoder Set	1
H1053	07035SC-7113	Bracket Screw (M3*L6)	2
H1054	08011SW-1111	Spring Washer (@3-S)	2
H1055	06011SW-2111	Washer (@3)	2
H1056	05000100H000	Encoder Base	1
H1057	08076SC-7113	Hex. Socket Bolt (M5*L12)	4
H1058	16018SW-1111	Washer (@5)	2
H1059	18048SW-3115	Spring Washer (@5)	2
H1060	02003500UK60	Oil Tank Cover (6 Head)	1
H1062	05008MC-9123	TRUSS SCREW(M5*L8) SUS	2
H1063	03304900H000	Upper Thread Holder Stopper	6
H1064	03411900H000	Jump Clutch Plate Spring	6
H1065	03411810H000	Jump Crank Roller Set	6
H1066	03410000H000	Jump Set	6
H1067	01303800U000	Cover Rubber Cap	1
H1068	25029EL-UK06	Cable (25-29)	1
H1069	GP-007318-00	ARM TOP COVER	6
H1070	07016SC-7113	HEX.SOCKET BOLT (M4*L12)	18
H1071	18036CW-UK06	OIL TANK COVER SUPPORT	1
H1072	07027AD-AE00	TAKE-UP GUIDE RAIL (6C)	6
	03300604U000	TAKE-UP GUIDE RAIL (12C)	6
	01300105U000	TAKE-UP GUIDE RAIL (L) (15C)	1
	01300205U000	TAKE-UP GUIDE RAIL (M) (15C)	4
	01400105U000	TAKE-UP GUIDE RAIL (R) (15C)	1

H2

Arm III

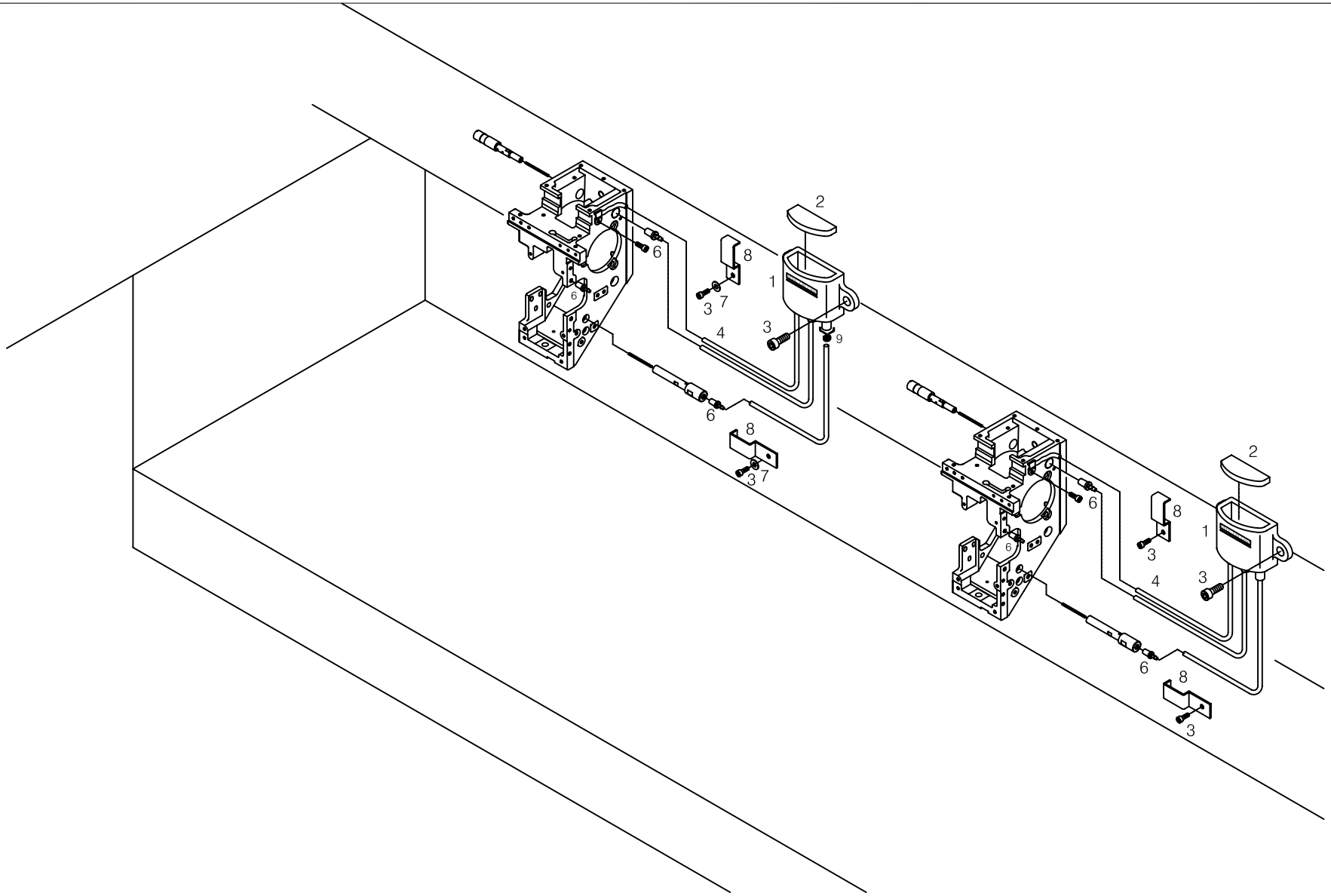

Ref. No	Part No.	Part Names	Q'ty
H2001	32000100UK40	Oil Tank Ass'Y	6
H2002	32000500UK40	Oil Tank Felt	4
H2003	02023SC-7113	Hex. Socket Bolt (M4*L8)	24
H2004	18045ET-UK01	Oil Hose L=160	24
H2006	03000500U000	Oil Tube Pin	18
H2007	18015SW-3111	WASHER (4@)	12
H2008	18033PR-UK01	OIL TUBE GUIDE	12
H2009	32046SP-T121	HOLDER FOR OIL HOSE	18

Ref. No	Part No.	Part Names	Q'ty

I Color Change Set

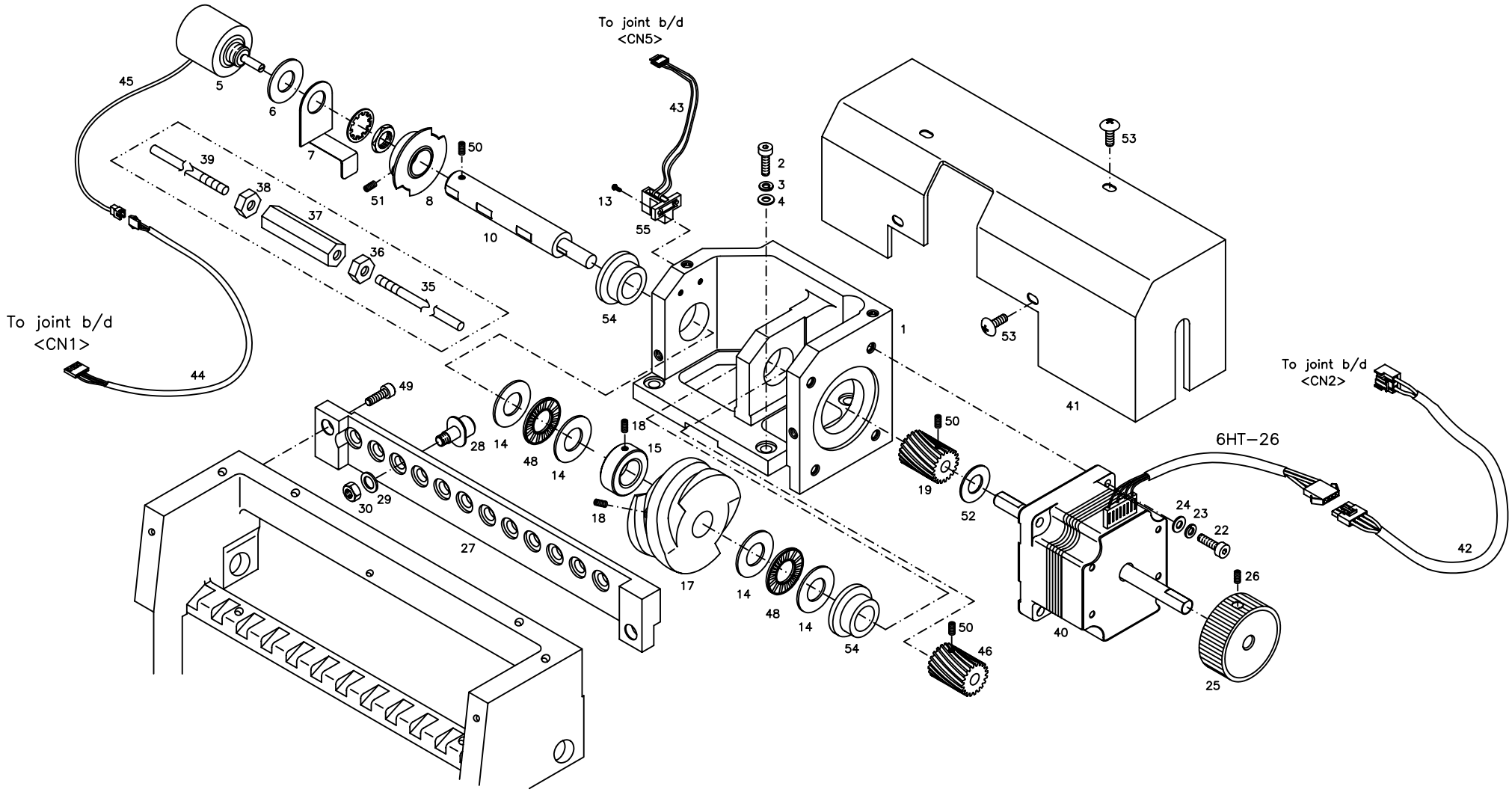

Ref. No	Part No.	Part Names	Q'ty
I-001	13001CA-UK06	Color Change Base	1
I-002	05008SC-4113	Hex.Socket Bolt (M4*L16)	4
I-003	18014SW-3115	Spring Washer (@4-No2)	4
I-004	18015SW-3111	Washer (4@)	4
I-005	15012MT-T121	Potentiometer (7824 R1K L25)	1
I-006	15014PR-T121	Potentiometer Washer	1
I-007	13015PR-UK06	Potentiometer Bracket	1
I-008	13032AD-UK06	Color Change Film Set	1
I-010	13007CW-UK06	Color Change Shaft	1
I-013	08006SC-8118	Plus Screw (M3*L5)	2
I-014	13010BR-T121	Washer(@12*@26*1T)	4
I-015	13010CW-UK06	Color Change Collar	1
I-017	13005CM-UK06	Color Change Cam	1
I-018	04012AF-A001	Hook Shaft Bush Screw	5
I-019	13020GA-UK06	Color Change Gear (L)	5
I-022	05008SC-4113	Hex.Socket Bolt (M4*L16)	4
I-023	02028SW-9115	Spring Washer (@4)	4
I-024	05009SW-1111	Washer (@4-L)	4
I-025	13022AD-UK06	Color Change Passivity Handle	1
I-026	03020SC-A001	Drive Pin Screw 11/64,N40,L8	2
I-027	08103102C010	Color Change Roller Base (6C)	1
	13026CL-D104	Color Change Roller Base (9C)	
	13026CL-UK06	Color Change Roller Base (12C)	
	13026CL-UK16	Color Change Roller Base (15C)	
I-028	15029AF-T121	Roller Set	6
I-029	18048SW-3115	Spring Washer (@5)	6
I-030	12010SN-1211	Hex.Nut (M5)	6
I-035	06000102UK60	Color Change Shaft "A" (6,9C)	1
	23012SH-UK06	Color Change Shaft "A" (12C)	
	23012SH-UK16	Color Change Shaft "A" (15C)	
I-036	17053SN-1111	Hex. Nut(L) (M6*T5-L)	1
I-037	17051SN-A001	Mes Priving Shaft Joint	1
I-038	13042SN-1111	Hex.Nut (M6*T5-R)	1
I-039	06000202UK60	Color Change Shaft "B" (6C)	1
	23013SH-UK06	Color Change Shaft "B" (9,12C)	
	23013SH-UK16	Color Change Shaft "B" (15C)	
I-040	13027MT-UK06	Color Change Motor	1
I-041	13043PR-UK06	Color Change Cover	1
I-042	25025EL-UK06	Cable (25-25)	1
I-043	25033EL-UK06	Cable (25-33)	1

Ref. No	Part No.	Part Names	Q'ty
I-044	25035EL-UK01	Cc Poten. Meter To J/B(4Ht-35)	1
I-045	25036EL-UK01	Cc Potentiometer Cable(4Ht-36)	1
I-046	13021GA-UK06	Color Change Gear (R)	1
I-048	13041BR-UK01	Washer(12*@26*1T)	2
I-049	18047SC-7113	Hex/ Socket Bolt (M5*L15)	2
I-050	08113SC-A001	Collar Screw	5
I-051	04014SC-4517	Hex.Socket Set Screw(M5*L5)	2
I-052	13019PR-A001	Half Turm Film Washer (T1.0)	1
I-053	04006MC-9123	Truss Screw (M4*L6) SUS	4
I-054	GP-006252-00	Cam Bushing	2
I-055	08102300B000	Half Turn Sensor (Gp1S51V)	1

J

Wiper Set

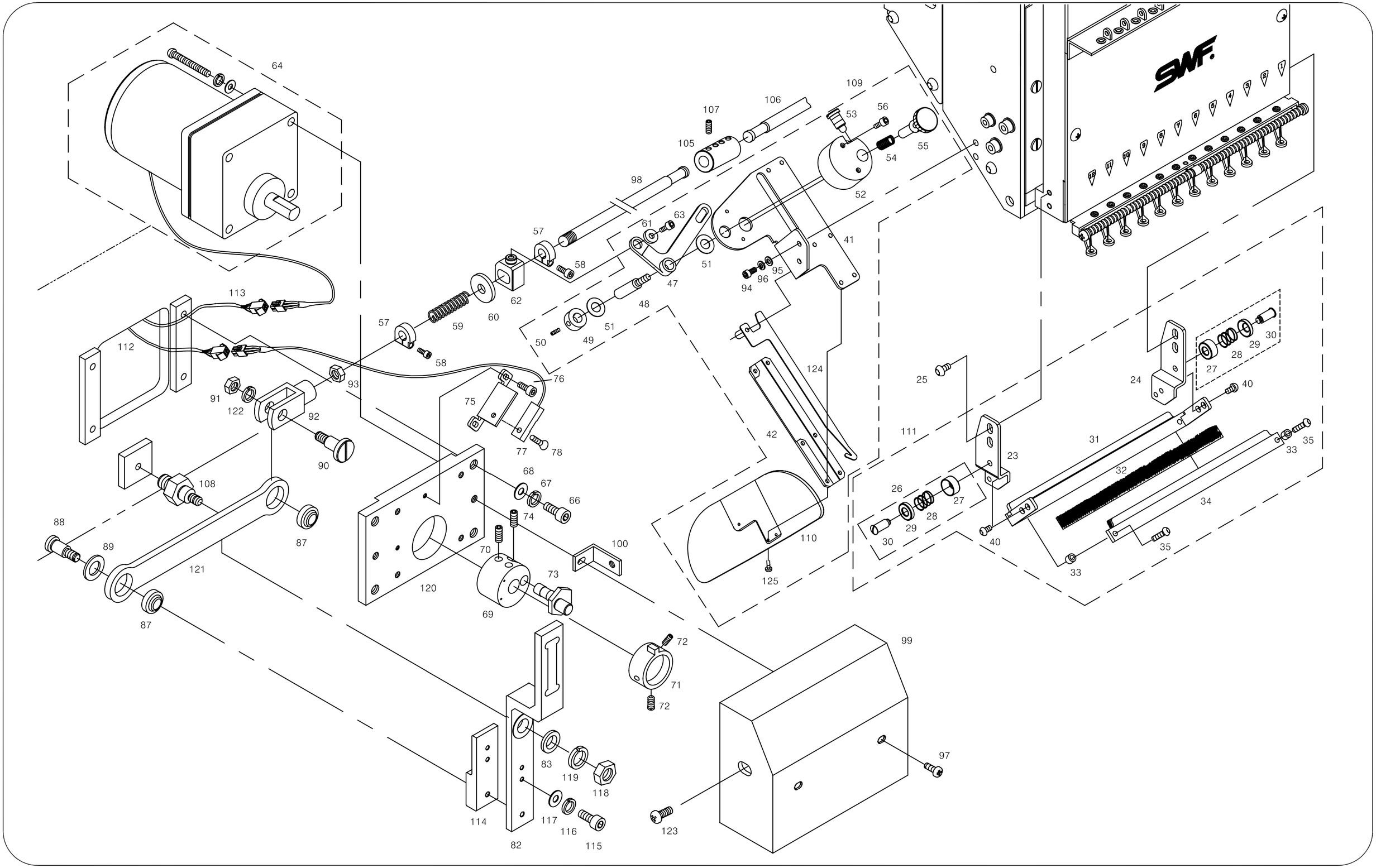
64
109
106
107
105
53
56
55
54
98
52
57
61
63
41
58
51
95
96
94
47
113
62
48
57
59
60
50
49
51
112
58
76
93
124
91
122
92
75
25
24
27
28
29
30
40
42
111
31
77
78
90
23
35
33
32
108
68
67
66
26
27
28
29
30
34
88
74
40
35
89
87
100
70
110
33
121
73
125
120
69
87
72
99
71
72
97
83
119
118
114
117
116
115
123
82

Ref.No	Part No.	PartNames	Q'ty
J-023	09040PR-A001	Bracket (L)	6
J-024	09041PR-A001	Bracket (R)	6
J-025	02009SC-A001	Side Cover Screw	24
J-026	09044PR-A001	Upper Thread Holder Disk Set	12
J-031	09034PR-AE00	Upper Thread Presser Base (6C)	6
	09030PR-A002	Upper Thread Presser Base (9C)	
	09026PR-AB00	Upper Thread Presser Base (12C)	
	09052PR-T151	Upper Thread Presser Base (15C)	
J-032	09035ET-AE00	Velcro (6C)	12
	09031ET-A002	Velcro (9C)	
	09027ET-AB00	Velcro (12C)	
	09027ET-T151	Velcro (15C)	
J-033	09038CW-A001	Thread Presser Space	12
J-034	09037PR-AE00	Presser Base Cover (6C)	6
	09033PR-A002	Presser Base Cover (9C)	
	09029PR-AB00	Presser Base Cover (12C)	
	09029PR-T151	Presser Base Cover (15C)	
J-035	07018SC-8118	Plus Screw (M3*L8)	12
J-040	06010SC-8118	Plus Screw (M3*L4)	24
J-041	03500110H000	Upper Thread Catcher Base	6
J-042	03500210H000	Upper Thread Hook Base Cover	6
J-047	03500500H000	Upper Catcher Driving Lever	6
J-048	03500600H000	Driving Lever Pin	6
J-049	03500700H000	Driving Lever Pin Collar	6
J-050	04014SC-4517	Hex.Socket Set Screw(M5*L5)	12
J-051	03500800H000	Driving Lever Pin Washer	12
J-052	03500900H000	Clutch Block	6
J-053	03501000H000	Clutch Stud Screw	6
J-054	03501100H000	Clutch Spring	6
J-055	03501200H000	Clutch Dial	6
J-056	11029SC-4113	Hex. Socket Bolt (M4*L20)	12
J-057	03002610H000	Return Spring Stopper	12
J-058	05008SC-4113	Hex.Socket Bolt (M4*L16)	12
J-059	03002700H000	Return Spring	6
J-060	03002800H000	Return Spring Stopper Washer	6
J-061	03002900H000	Return Spring Fix Pin Washer	6
J-062	03003000H000	Return Spring Fix Pin	6
J-063	02015SC-7113	Hex.Socket Bolt(M4*L10)	6
J-064	03003100H000	Upper Thread Hook Motor Unit	1
J-066	06025MC-7113	Hex.Socket Bolt(M6*L25)	4
J-067	16014SW-4115	Spring Washer (@6)	4

Ref. No	Part No.	Part Names	Q'ty
J-068	08057SW-1111	Washer (@6)	4
J-069	03003300H000	Cam Shaft Fixing Block	1
J-070	05008MC-4517	Hex.Socket Bolt(M5*L8)	2
J-071	GP-005184-00	SENSOR SENSING ADJUSTING RING	2
J-072	04014SC-4517	Hex.Socket Set Screw(M5*L5)	2
J-073	03003500H000	Motor Driving Cam Shaft	1
J-074	04014SC-4517	Hex.Socket Set Screw(M5*L5)	1
J-075	GP-005180-00	UPPER THREAD HOOK SENSOR BASE	1
J-076	07035SC-7113	Bracket Screw (M3*L6)	2
J-077	15-027A-2070	SENSOR	2
J-078	13061SC-8119	Plus Screw (M3*L10)	1
J-082	03003910H000	Upper Thread Driving Plate	1
J-083	03004000H000	Stud Bolt Washer	1
J-087	03004400H000	Motor Driving Connect Bearing	2
J-088	03008300H000	Connecting Plate Stud Screw A	1
J-089	03004500H000	Connecting Plate Pin Washer	1
J-090	03004700H000	Connecting Plate Stud Screw	1
J-091	13042SN-1111	Hex.Nut (M6*T5-R)	1
J-092	03004800H000	Connecting Plate Knuckle	1
J-093	04032SN-A001	Hex. Nut (M8-No2)	1
J-094	02023SC-7113	Hex.Socket Bolt (M4*L8)	12
J-095	18015SW-3111	Washer (4@)	12
J-096	18014SW-3115	Spring Washer (@4-No2)	12
J-097	02023SC-7113	Hex. Socket Bolt (M4*L8)	2
J-098	03007000UK60	Upper Thread Driving Shaft	1
J-099	12001900U060	Upper Thread Hook Motor Cover	1
J-100	03008600H000	Motor Cover Fixing Bracket	2
J-101	02023SC-7113	Hex.Socket Bolt (M4*L8)	2
J-102	18014SW-3115	Spring Washer (@4-No2)	2
J-103	18015SW-3111	Washer (4@)	2
J-105	03007300H000	Upper Thread Shaft Coupling	1
J-106	03007100UK60	Upper Thread Driving Shaft	1
J-107	08113SC-A001	Collar Screw	4
J-108	03003810H000	Stud Bolt For Driving Plate	1
J-109	08500010U000	Upper Thread Catcher Set	6
J-110	12209100U000	Cap Guide	6
J-111	08600002B000	Upper Thread Base Set (6C)	6
	08600003B000	Upper Thread Base Set (9C)	
	08600004B000	Upper Thread Base Set (12C)	
	08600005B000	Upper Thread Base Set (15C)	
J-112	02106600U060	Sh-66-4	1

J

Wiper Set

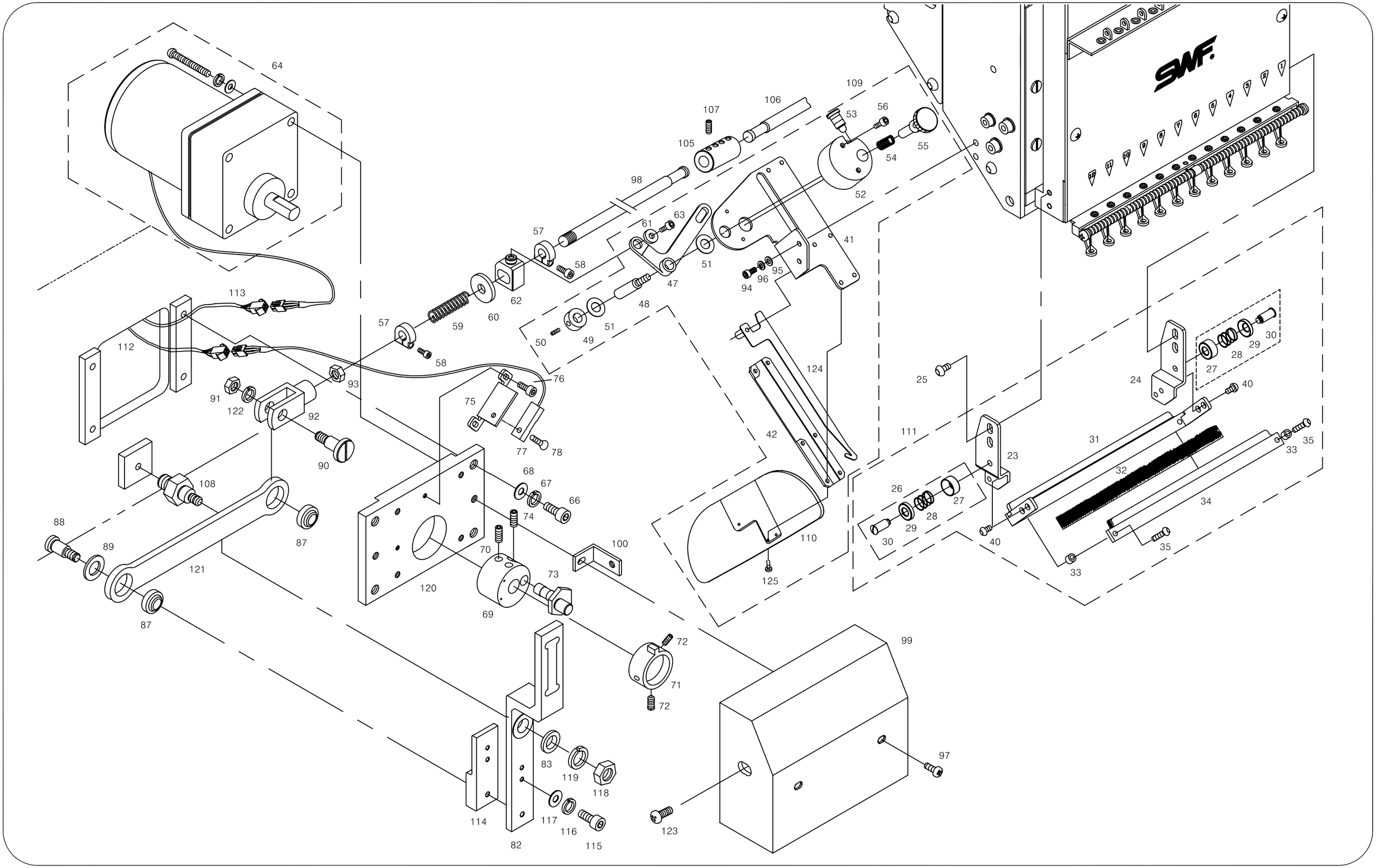
64
109
106
107
105
53
56
55
54
98
52
57
61
63
41
58
51
95
96
94
47
113
62
48
57
59
60
50
49
51
112
58
76
93
124
91
122
92
75
25
24
27
28
29
30
40
42
111
31
77
78
90
23
35
33
32
108
68
67
66
26
27
28
29
30
34
88
74
40
35
89
87
100
70
110
33
121
73
125
120
69
87
72
99
71
72
97
83
119
118
114
117
116
115
123
82

Ref.No	Part No.	PartNames	Q'ty
J-113	02106700U060	Sh-67-4	1
J-114	03004110H000	Driving Plate Block B	1
J-115	18047SC-7113	Hex/ Socket Bolt (M5*L15)	2
J-116	18048SW-3115	Spring Washer (5@)	2
J-117	18049SW-3111	Washer (@5)	2
J-118	04032SN-A001	Hex. Nut (M8-No2)	1
J-119	15095SW-3115	Spring Washer (@8)	1
J-120	03003210H000	Upper Thread Cather Motor Base	1
J-121	03004200HH00	Motor Driving Connecting Plate	1
J-122	16014SW-4115	Spring Washer	1
J-123	02010SC-3123	Truss Screw	1
J-124	03500330H000	Upper Thread Hook	6
J-125	03005MC-3123	TRUSS SCREW (M3*L5)	36

Ref. No	Part No.	Part Names	Q'ty

K

Head

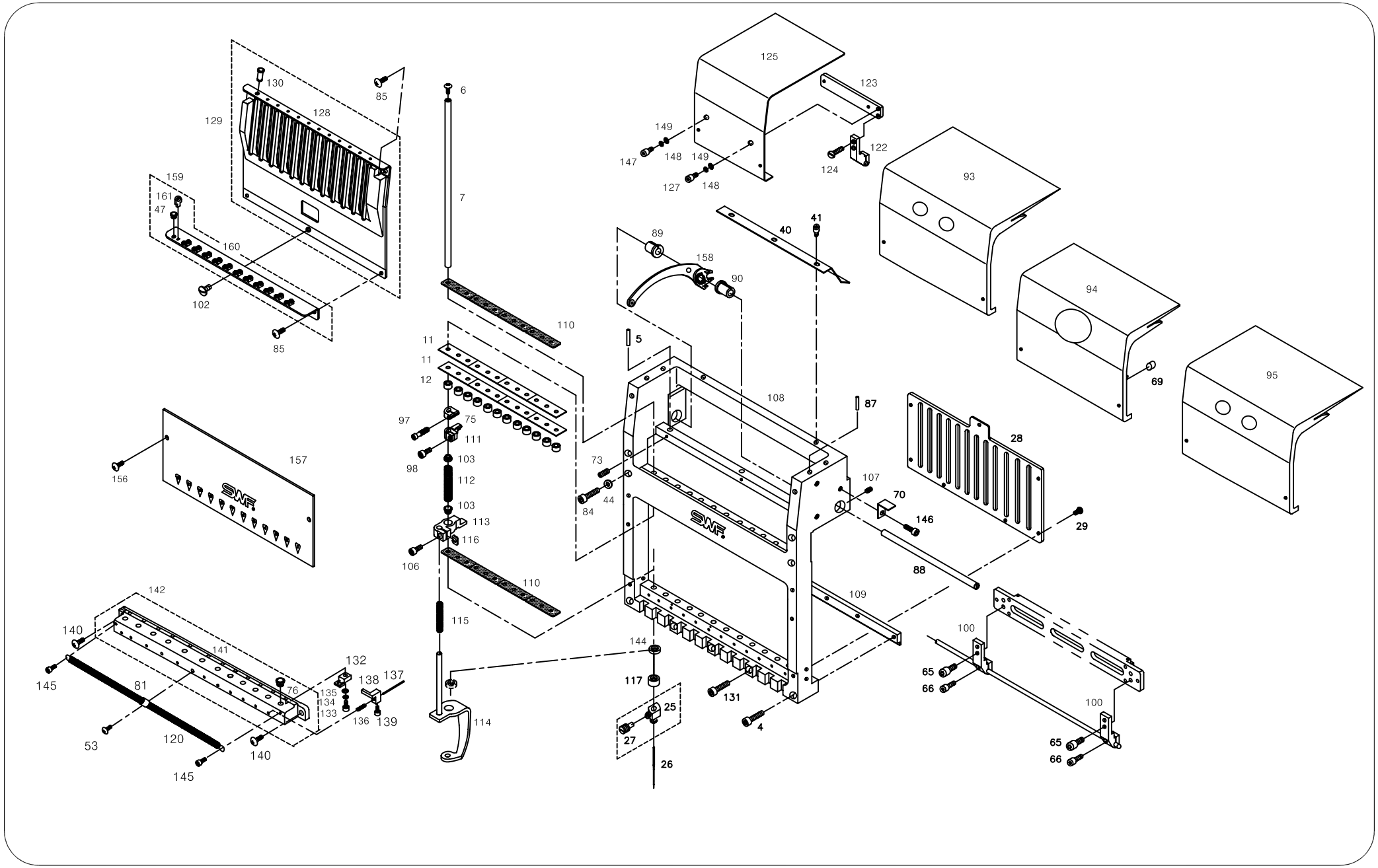
125
123
122
124
149
148
147
127
93
94
95
69
41
40
89
158
90
130
85
129
128
6
7
159
161
47
160
102
110
5
11
12
108
87
28
29
97
75
111
98
103
112
73
44
84
107
70
146
88
157
156
113
116
106
109
142
140
141
145
81
76
132
138
137
135
134
133
136
139
53
120
144
117
25
27
26
131
4
114
100
65
66

Ref.No	Part No.	PartNames		Q'ty
K-004	05014SC-7113	Hex. Socket Bolt (M4*L25)		40
K-005	05015CW-A001	Head Base Pin(@5*L15)		12
K-006	05019SC-A001	Needle Bar Cover Screw (M5*L6)		72
K-007	05018CW-A001	Needle Bar		72
K-011	05023RB-A001	Needle Bar Cushion Rubber "A"		48
K-012	05024RB-A001	Needle Bar Cushion Rubber "B"		72
K-025	05036CW-A001	Needle Fixed Holder		72
K-026	05037DB-A001	Needle (Db-K5, #11)		72
K-027	05363SC-A001	Needle Fixed Screw (A/S)		72
K-028	05040PM-AE00	Needle Bar Guide Rail	(6C)	6
	05039PM-A002	Needle Bar Guide Rail	(9C)	
	05038PM-AB00	Needle Bar Guide Rail	(12C)	
	05038PM-H003	Needle Bar Guide Rail	(15C)	
K-029	05041SC-A001	Guide Rail Serew		48
K-040	11048PR-AE00	Cable Support Plate "B"	(6C)	5
	11047PR-A002	Cable Support Plate "B"	(9C)	
	11046PR-AB00	Cable Support Plate "B"	(12C)	
	11046PR-H003	Cable Support Plate "B"	(15C)	
K-041	02023SC-7113	Hex. Socket Bolt (M4*L8)		18
K-044	06003SW-2111	Washer (@4)		24
K-047	05452CM-A001	Eyelet "A"		144
K-053	05060SC-8118	Screw (M3*L3)		6
K-065	02031SC-7113	Hex. Socket Screw(M5*L10)		24
K-066	02015SC-7113	Hex.Socket Bolt(M4*L10)		12
K-069	02023ET-A001	Top Shaft Cover Magnet		8
K-070	02022PR-UK01	Upper Shaft Cover "B" Bracket		2
K-073	03022SC-4517	Hex. Socket Set Screw(M4*L5)		12
K-081	10400304B000	Spring Holder		6
K-084	05008SC-4113	Hex.Socket Bolt (M4*L16)		24
K-085	05070SC-3123	Head Face Plate (U) Screw		24
K-087	01303700H000	Tension Plate Pin		12
K-088	08200602A000	Take-Up Lever Shaft	(6C)	6
	08200503A000	Take-Up Lever Shaft	(9C)	
	08200404A000	Take-Up Lever Shaft	(12C)	
	07004SF-T151	Take-Up Lever Shaft	(15C)	
K-089	08203000A000	Take-Up Lever Shaft Bush(L)		6
K-090	08200800A000	Take-Up Lever Shaft Bush(R)		6
K-091	11101200T000	Upper Dead Point Stopper		72

Ref.No	Part No.	PartNames		Q'ty
K-093	09000102UK00	Top Shaft Cover "A"	(6C)	1
	09000103UK00	Top Shaft Cover "A"	(9C)	
	09000104UK00	Top Shaft Cover "A"	(12C)	
	02001PM-UK14	Top Shaft Cover "A"	(15C)	
K-094	09000202UK00	Top Shaft Cover "B"	(6C)	2
	09000203UK00	Top Shaft Cover "B"	(9C)	
	09000204UK00	Top Shaft Cover "B"	(12C)	
	02005PM-UK14	Top Shaft Cover "B"	(15C)	
K-095	09000302UK00	Top Shaft Cover "C"	(6C)	2
	09000303UK00	Top Shaft Cover "C"	(9C)	
	09000304UK00	Top Shaft Cover "C"	(12C)	
	02036PM-UK14	Top Shaft Cover Uk1504-45	(15C)	
K-097	05026SC-4113	Stopper Screw (9/64-11.5)		72
K-098	05028SC-4113	Holder Screw (9/64-L8)		72
K-100	08004900A000	Color Change Bracket "B"		12
K-102	05062SC-A001	Thread Guide (L) Screw		6
K-103	05021PM-H001	Presser Foot Spring Guide		144
K-106	05026SC-H001	Presser Foot Holder Screw		72
K-107	07009SC-4517	Hex.Socket Set Screw (M5*L6)		12
K-108	08200102U000	Head	(6C)	6
	08200103U000	Head	(9C)	
	08200104U000	Head	(12C)	
	08200105U000	Head	(15C)	
K-109	08201302H000	Head Rail	(6C)	6
	08201303H000	Head Rail	(9C)	
	08201304H000	Head Rail	(12C)	
	08201305H000	Head Rail	(15C)	
K-110	08200700H000	Needle Bar Felt		48
K-111	08201400H000	Needle Bar Holder		72
K-112	08200800H000	Needle Bar Return Spring		72
K-113	08200900H000	Presser Foot Holder Set		72
K-114	08200510H000	Presser Foot (Hight Speed)		72
K-115	08201000H000	Presser Foot Return Spring		72
K-116	08201100H000	Presser Foot Spacer		72
K-117	08201200H000	Presser Foot Cushion Rubber A		72
K-120	10800504H000	Thread Guide Spring 12C		6
K-122	08004700A000	Color Change Bracket "A"		1
K-123	09000200H000	Top Shaft Cover Bracket (L)		1
K-124	13048SC-A001	Bracket "A" Screw		2

K

Head

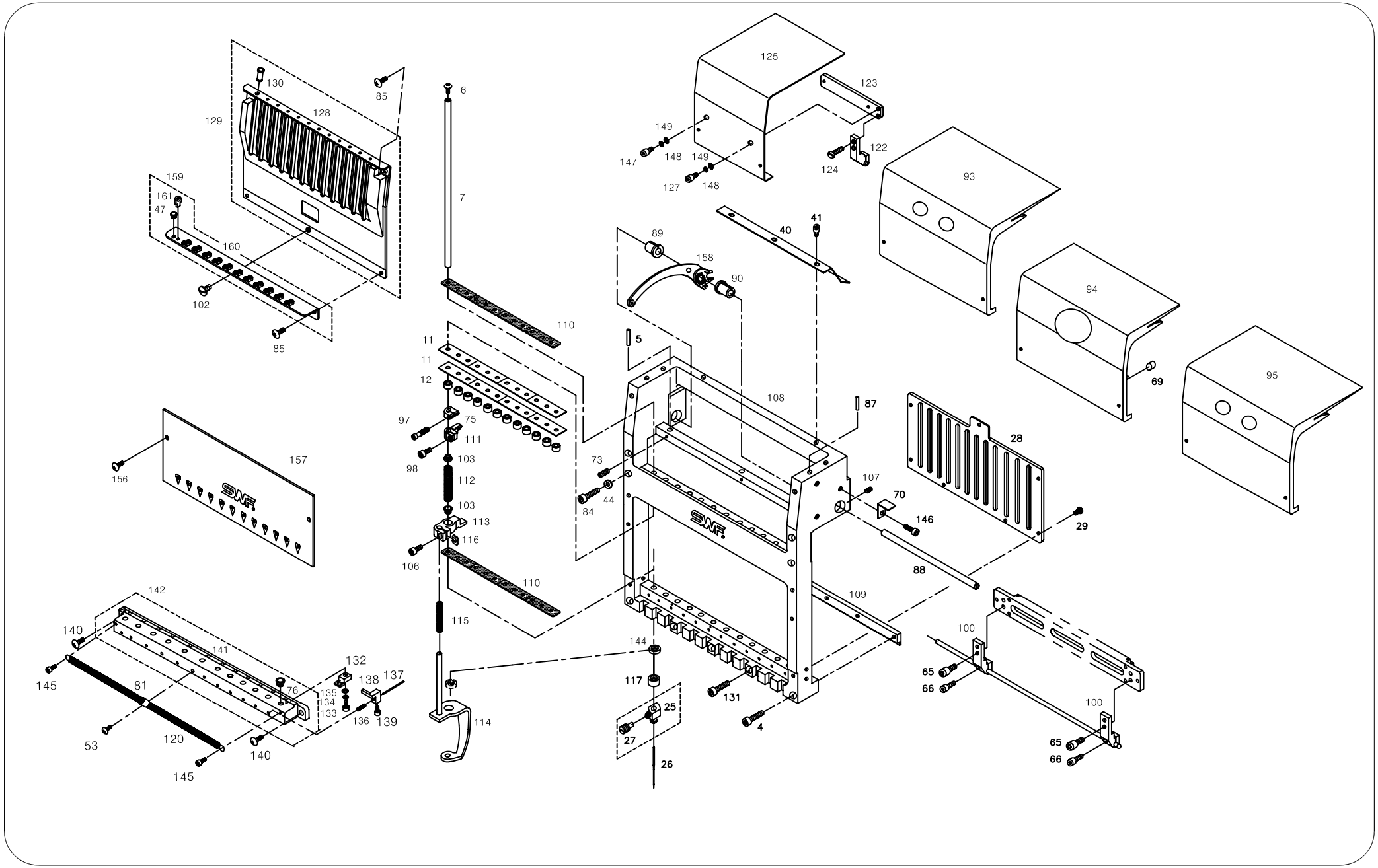
125
123
122
124
149
148
147
127
93
94
95
69
41
40
89
158
90
130
85
129
128
6
7
159
161
47
160
102
110
5
11
12
108
87
28
29
97
75
111
98
103
112
73
44
84
107
70
146
88
157
156
113
116
106
109
142
140
141
145
81
76
132
138
137
135
134
133
136
139
53
120
144
117
25
27
26
131
4
114
100
65
66

Ref. No	Part No.	Part Names		Q'ty
K-125	01001400UK00	Top Shaft Cover (L)		1
K-127	02015SC-7113	Hex.Socket Bolt(M4*L10)		1
K-128	10200102B000	Head Face Plate (U)	(6C)	6
	10200103B000	Head Face Plate (U)	(9C)	
	10200104B000	Head Face Plate (U)	(12C)	
	10200105B000	Head Face Plate (U)	(15C)	
K-129	10200012H000	Thread Guide (U) Set	(6C)	6
	10200013H000	Thread Guide (U) Set	(9C)	
	10200014H000	Thread Guide (U) Set	(12C)	
	10200015H000	Thread Guide (U) Set	(15C)	
K-130	10200100H000	Eyelet "A-1"		72
K-131	05014SC-7113	Hex. Socket Bolt (M4*L25)		36
K-132	10900200H000	Upper Thread Holder Block		72
K-133	03010MC-4135	Holder Block Screw		72
K-134	11019SW-9115	Spring Washer (3@)		72
K-135	06011SW-2111	Washer (@3)		72
K-136	10900300H000	Upper Thread Holder Spring		72
K-137	10900400H000	Upper Thread Holder Pin		72
K-138	10900500H000	Upper Thread Holder Clamp		72
K-139	03006MC-4535	Thread Holder Clamp Screw		72
K-140	05070SC-3123	Head Face Plate (U) Screw		12
K-141	10900102H000	UPPER THREAD HOLDER APRON	(6C)	6
	10900103H000	UPPER THREAD HOLDER APRON	(9C)	
	10900104H000	UPPER THREAD HOLDER APRON	(12C)	
	10900105H000	UPPER THREAD HOLDER APRON	(15C)	
K-142	10900012H000	Upper Thread Holder Apron Set	(6C)	6
	10900013H000	Upper Thread Holder Apron Set	(9C)	
	10900014H000	Upper Thread Holder Apron Set	(12C)	
	10900015H000	Upper Thread Holder Apron Set	(15C)	
K-143	05007SC-7113	Hex. Socket Bolt (M3*L5)		12
K-144	08201500H000	PRESSER FOOT CUSHION RUBBER B		72
K-145	03004MC-7113	HEX. SOCKET BOLT (M3*L4)		12
K-146	02023SC-7113	HEX. SOCKET BOLT (M4*L8)		2
K-147	02023SC-7113	HEX. SOCKET BOLT (M4*L8)		1
K-148	18014SW-3115	SPRING WASHER (@4-NO2)		2
K-149	18015SW-3111	WASHER (4@)		2
K-156	05070SC-3123	HEAD FACE PLATE (U) SCREW	(9/64",N=40,L10)	12
K-157	05000102U000	Head Face Plate (L)	(6C)	6
	05000103U000	Head Face Plate (L)	(9C)	
	05000114U000	Head Face Plate (L)	(12C)	
	05000115U000	Head Face Plate (L)	(15C)	

Ref. No	Part No.	Part Names		Q'ty
K-158	07005BM-B002	TAKE-UP LEVER SET		72
K-159	10300002A000	Thread Guide (M) Set	(6C)	6
	10300003A000	Thread Guide (M) Set	(9C)	
	10300004A000	Thread Guide (M) Set	(12C)	
	10300005A000	Thread Guide (M) Set	(15C)	
K-160	10300112A000	Thread Guide (M)	(6C)	6
	10300113A000	Thread Guide (M)	(9C)	
	10300114A000	Thread Guide (M)	(12C)	
	10300115A000	Thread Guide (M)	(15C)	
K-161	10110000A000	Eyelet "B"	(6C)	36
	10110000A000	Eyelet "B"	(9C)	54
	10110000A000	Eyelet "B"	(12C)	72
	10110000A000	Eyelet "B"	(15C)	90

L

Thread Tension Unit

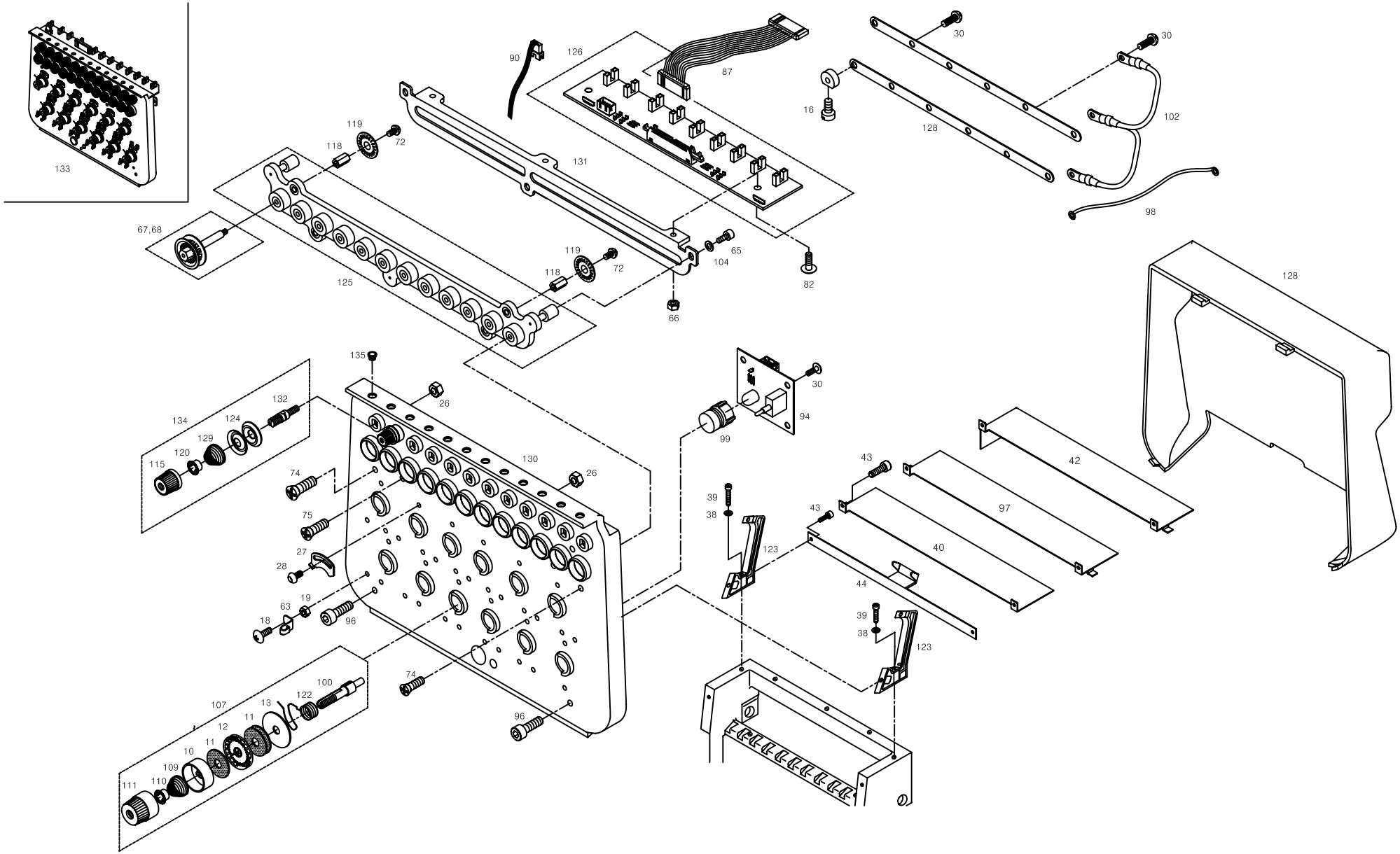

Ref. No	Part No.	Part Names	Q'ty
L-010	11086PM-A001	Tension Spring CoLLar	72
L-011	11084AF-A001	FeLt	216
L-012	11085AF-A001	Rotary Tension Disc	72
L-013	11083PM-A001	Disc PLate	72
L-016	11009SC-A001	Stud Screw	72
L-018	09005SC-3123	Truss Screw (M3*L6)	144
L-019	11014SN-1211	Hex.Nut (M3-No2)	144
L-026	03031SN-A001	Pin. Nut (11/64,N=40)	72
L-027	11009PR-B001	Thread Breakage Detecting PLat	72
L-028	09005SC-3123	Truss Screw (M3*L6)	72
L-030	09005SC-3123	Truss Screw (M3*L6)	72
L-035	11036EL-A001	Head On/Off Switch	6
L-036	25061EL-B001	Led Lamp S/W CabLe (New)	6
L-038	05009SW-1111	Washer (@4-L)	12
L-039	11029SC-4113	Hex. Socket BoLt (M4*L20)	12
L-040	02006PR-UK01	Cover PLate (R)	1
	02006PR-UK14	Cover PLate (R)	
	08003202B000	Cover PLate (R) 6C	
L-042	02009PR-UK01	Cover PLate (L)	1
	02009PR-UK14	Cover PLate (L)	
	08003302B000	Cover PLate (L) 6C	
L-043	11012PR-B001	Thread Guide (New)	6
L-044	11023PR-CT06	CabLe Supporter 6C	1
	11032PR-T121	CabLe Supporter 12C	
	11032PR-T151	CabLe Supporter 15C	
L-045	02023SC-7113	Hex. Socket BoLt (M4*L8)	2
L-063	11012PR-B001	Thread Guide (New)	144
L-065	02023SC-7113	Hex.Socket BoLt (M4*L8)	18
L-066	05016SN-1211	Hex.Nut (M4)	18
L-067	11075PM-B001	Thread Sensor RoLLer(B1)Set	72
L-068	11076PM-B001	Thread Sensor RoLLer(B2)Set	48
L-072	08011SC-8118	Screw (M2*L4)	72
L-074	15089SC-7119	C.S Screw (M4*L10)	12
L-075	02002SC-7119	Pluss Screw (M4*L8)	30
L-082	02010SC-3123	Truss Screw (M4*L8)	18
L-087	25126EL-B001	Sensor Board To Wheel Earth	6
L-090	02101800B000	Plate Led S/W Board Cable	6
L-094	02-0000-EMB1	Head On/Off S/W Board 9C,15C	6
	03-0000-EMB1	Head On/Off S/W Board 6C,12C	
L-096	04010MC-7113	Hex.Socket Bolt (M4*L10)	12
L-097	11031PR-AB00	Cover Plate 12C	3

Ref. No	Part No.	Part Names	Q'ty
L-098	25126EL-B001	Sensor Board To Wheel Earth	1
L-099	08300400A000	Lamp Cover	1
L-100	11081CW-A001	Thread Tension Adjusting Stud	72
L-102	02103903H000	Wheel Earth 6,9,12C	6
	25124EL-B001	Tension Plat Earth Cable 15C	
L-104	06003SW-2111	Washer (@4)	18
L-105	11017BM-T121	Sub Tension Adjusting Set	72
L-107	08310000B000	TENSION ADJUSTING SET	72
L-109	08300800A000	TENSION ADJUSTING SPRING	72
L-110	08300700A000	TENSION SPRING STOPPER	72
L-111	08300500A000	TENSION ADJUSTING NUT	72
L-115	08300600A000	SUB TENSION ADJUSTING NUT(A)	72
L-118	08308300B000	THREAD DETECTING WHEEL STUD (6C)	36
	11083CW-B001	THREAD DETECTING WHEEL STUD (9C)	54
	08308300B000	THREAD DETECTING WHEEL STUD (12C)	72
	11083CW-B001	THREAD DETECTING WHEEL STUD (15C)	90
L-119	GP-005179-00	THREAD BREAKAGE DETECTING WHEEL	72
L-120	11088PM-A001	TENSION SPRING STOPPER	72
L-122	11082AF-A001	THREAD TAKE-UP SPRING	72
L-123	08202000A000	TENSION ADJUSTING PLATE HOLDER (6,9C)	12
	08202000I000	TENSION ADJUSTING PLATE HOLDER (12C)	
	11020PM-B001	TENSION ADJUSTING PLATE HOLDER (15C)	
L-124	08301200I000	TENSION DISC	288
L-125	08300702I000	ROLLER BASE (6C)	6
	08300703I000	ROLLER BASE (9C)	
	08300704I000	ROLLER BASE (12C)	
	08300705I000	ROLLER BASE (15C)	
L-126	18009EL-WH06	WHEEL SENSOR BOARD (6C)	6
	20009EL-WH09	WHEEL SENSOR BOARD (9C)	
	20009EL-WH12	WHEEL SENSOR BOARD (12C)	
	20009EL-WH15	WHEEL SENSOR BOARD (15C)	
L-127	08300302I000	CONNECTION PLATE (6C)	12
	08300303I000	CONNECTING PLATE A (9C)	6
	08300403I000	CONNECTING PLATE B (9C)	6
	08300304I000	CONNECTION PLATE (12C)	12
	08300305I000	CONNECTION PLATE "A" (15C)	6
	08300405I000	CONNECTION PLATE "B" (15C)	6
L-128	08000803I000	TENSION PLATE COVER (9C)	6
	08000804I000	TENSION PLATE COVER (12C)	
	08000805I000	TENSION PLATE COVER (15C)	
L-129	08301100I000	TENSION SPRING	72

L

Thread Tension Unit

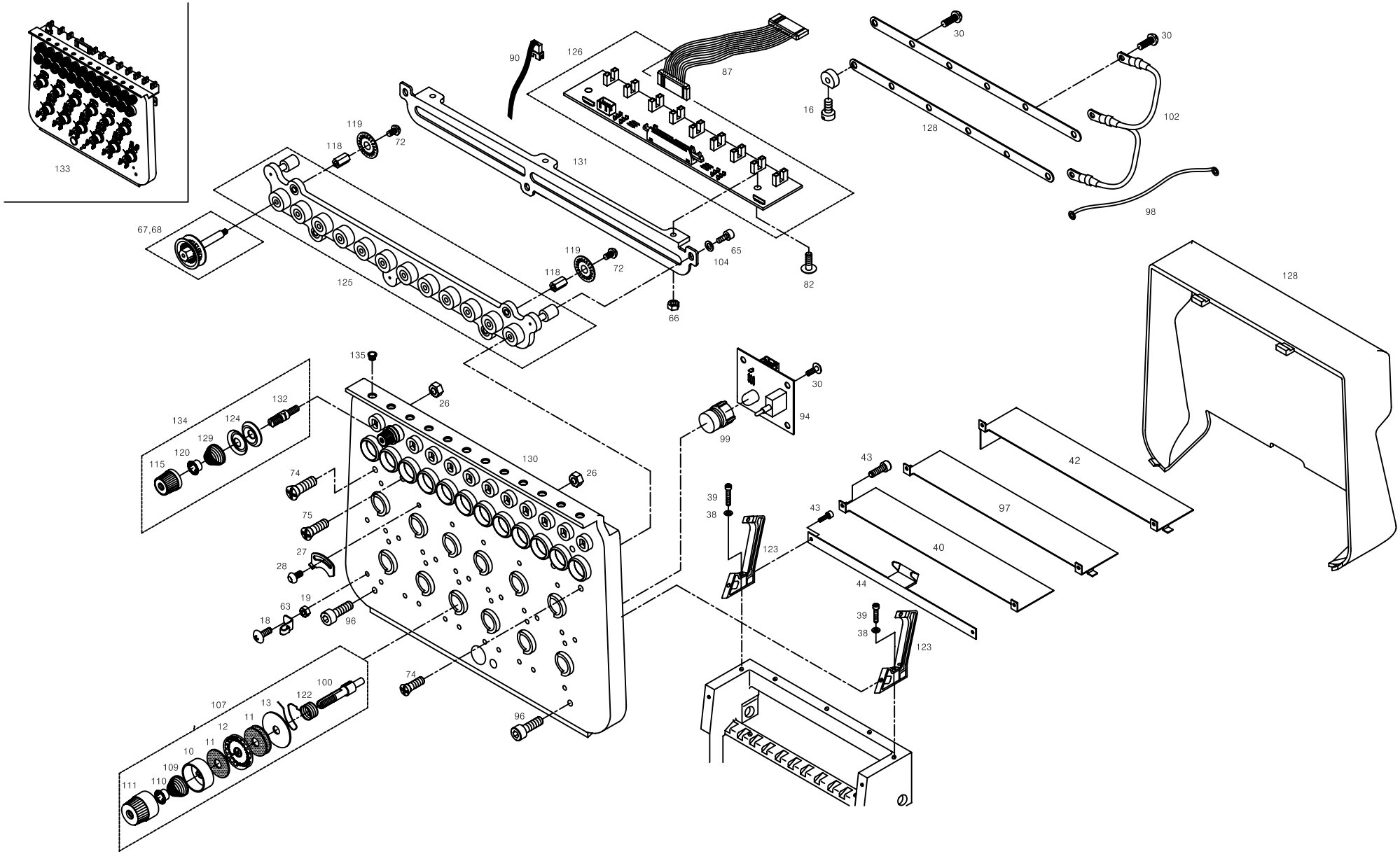

Ref. No	Part No.	Part Names		Q'ty
L-130	083001021000	TENSION UNIT PLATE	(6C)	6
	083001031000	TENSION UNIT PLATE	(9C)	
	083001041000	TENSION UNIT PLATE	(12C)	
	083001051000	TENSION UNIT PLATE	(15C)	
L-131	083002021000	BOARD BASE	(6C)	6
	083002031000	BOARD BASE	(9C)	
	083002041000	BOARD BASE	(12C)	
	083002051000	BOARD BASE	(15C)	
L-132	083010001000	TENSION ADJUSTING STUD		72
L-133	083000021000	TENSINO UNIT SET	(6C)	6
	083000031000	TENSINO UNIT SET	(9C)	
	083000041000	TENSINO UNIT SET	(12C)	
	083000051000	TENSINO UNIT SET	(15C)	
L-134	083200001000	SUB TENSION ADJUSTING SET		72
L-135	05452CM-A001	EYELET "A"		72

Ref. No	Part No.	Part Names	Q'ty

M

X-Axis Drive Set

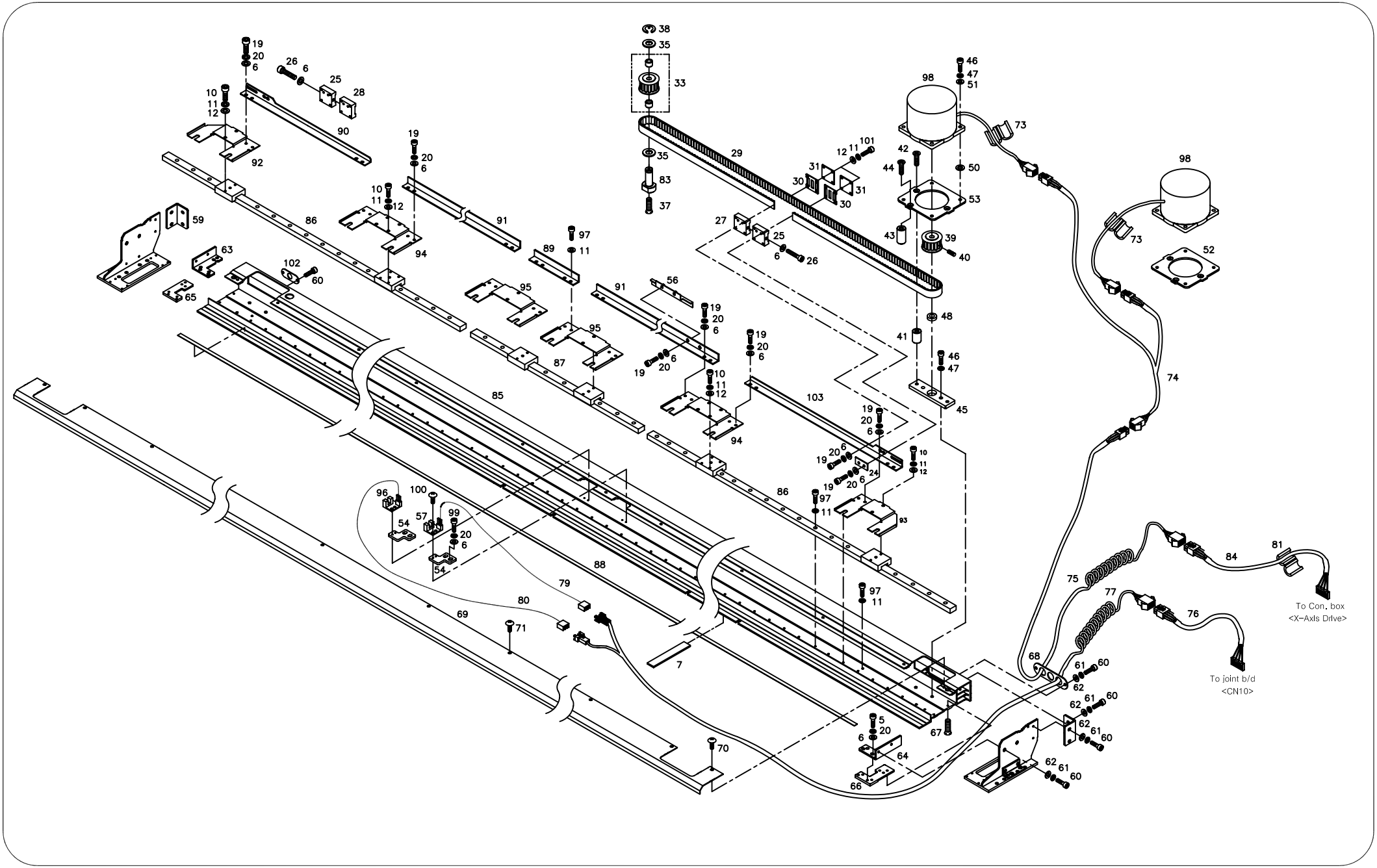

Ref. No	Part No.	Part Names	Q'ty
M-005	02015SC-7113	Hex.Socket Bolt(M4*L10)	6
M-006	05009SW-1111	Washer (@4-L)	34
M-007	15062SF-T121	Felt	6
M-010	22006SC-7113	Hex. Socket Bolt (M3*L8)	16
M-011	11019SW-9115	Spring Washer (3@)	40
M-012	08011SW-1111	Spring Washer (@3-S)	40
M-019	02023SC-7113	Hex. Socket Bolt (M4*L8)	26
M-020	02028SW-9115	Spring Washer (@4)	36
M-024	14020PR-UK01	Space	2
M-025	14045AD-UK01	Belt Bracket (B)	2
M-026	15034SC-4113	Hex. Socket Boit (M4*L45)	2
M-027	14049AD-UK01	Belt Bracket (C)	1
M-028	14048AD-UK01	Belt Bracket (A)	1
M-029	12048BT-T121	X-Axis Timing Belt	2
M-030	14051PR-UK01	Fixing Plate	4
M-031	14052PR-UK01	Fixing Plate Holder	4
M-033	12017PU-T121	Timing Pulley "A"	2
M-033	12018BR-T121	Neddle Bearing Hk1010(Ina)	4
M-035	12019BR-T121	Fiber Washer R-Tw1020	4
M-037	15048SC-4119	Plus Screw (M5*L12)	2
M-038	08044SR-4013	E-Ring (@8)	2
M-039	14063PU-UK01	Timing Pulley "B"	2
M-040	04014SC-4517	Hex.Socket Set Screw(M5*L5)	4
M-041	14065AD-UK01	Motor Fixing Shaft (A)	4
M-042	15053SC-4119	Plus Screw (M5*L30)	4
M-043	14067AD-UK01	Motor Fixing Shaft (B)	2
M-044	15055SC-4119	Plus Screw (M5*L35)	2
M-045	14069AD-UK01	Motor Block	2
M-046	08076SC-7113	Hex. Socket Bolt (M5*L12)	12
M-047	18048SW-3115	Spring Washer (@5)	12
M-048	14071BR-UK01	Bearing Bc616Zz	2
M-050	15061PR-UK01	Motor Space (@5*@11*2T)	8
M-051	16018SW-1111	Washer (@5)	8
M-052	14074PR-UK01	Motor Base (L)	1
M-053	14075PR-UK01	Motor Base (R)	1
M-054	15067PR-UK01	Sensor Plate	2
M-056	15071PR-UK01	Perception Plate	1
M-057	15043EL-UK01	X-Positioning Sensor	1
M-059	15083PR-UK06	X-Drive Connecting Plate	2
M-060	02023SC-7113	Hex.Socket Bolt (M4*L8)	14

Ref. No	Part No.	Part Names	Q'ty
M-061	18014SW-3115	Spring Washer (@4-No2)	14
M-062	18015SW-3111	Washer (4@)	14
M-063	15087PR-UK06	DRIVING CONNECTING PLATE (L)	1
M-064	15093PR-UK06	DRIVING CONNECT PLATE (R)	1
M-065	15108PR-UK06	Connecting Plate Base (L)	1
M-066	15109PR-UK06	Connecting Plate Base (R)	1
M-067	02002SC-7119	Pluss Screw (M4*L8)	8
M-068	14014PR-UK01	Bushing Plate	1
M-069	15103AD-UK06	X-Frame Cover L=3639	1
M-070	15042SC-3123	Truss Screw (M4*L6)	17
M-071	18153SC-3123	Plus Screw (M4*L10)	2
M-073	15044EL-T121	Bid (S)	2
M-074	25010EL-UK06	Cable (25-10)	1
M-075	25009EL-UK06	Cable (25-09)	1
M-076	25038EL-UK06	Cable (25-38)	1
M-077	25041EL-UK01	X Original In (4Ht-41)	1
M-079	25052EL-UK01	Last-Sensor (Black) 4Ht-52	1
M-080	25053EL-UK01	Last-Sensor (White) 4Ht-53	1
M-081	15045EL-UK01	Bid (L)	1
M-083	03106000U000	Timing Pulley Driving Pin	2
M-084	02101300U000	CABLE (SH-13-2)	1
M-085	03200400UK60	X-FRAME (L3639)	1
M-086	03200500UK40	X-AXIS L/M GUIDE (1160L)	2
M-087	03200500UK60	X-AXIS L/M GUIDE (760L)	1
M-088	03200600UK60	TUBULAR FRAME RAIL PLATE (L3630)	1
M-089	03200800UK60	CONNECTING PLATE FOR LM BLOCK (L119)	1
M-090	03200800UK40	L/M BLOCK CONNECTING PLATE (L)	1
M-091	03200900UK60	CONNECTING PLATE (A) (L714.5)	2
M-092	15007PR-UK02	CONNECTING PLATE(L)	1
M-093	15011PR-UK02	CONNECTING PLATE(R)	1
M-094	15015PR-UK02	CONNECTING PLATE	2
M-095	03200700UK60	CONNECTING PLATE "A"	2
M-096	15044EL-UK01	X-Positioning Sensor	1
M-097	03071SC-7113	HEX. SOCKET BOLT (M3*L10)	94
M-098	15076AF-UK01	X-MOTOR (103H8221-5044)	2
M-099	02015SC-7113	HEX.SOCKET BOLT(M4*L10)	4
M-100	03006MC-8118	PLUS SCREW (M3*L6)	4
M-101	03071SC-7113	HEX. SOCKET BOLT (M3*L10)	16
M-102	15082PR-W121	FIXING PLATE FOR BUSHING	1
M-103	03200900UK40	L/M BLOCK CONNECTING PLATE (R)	1

N

Y-Axis Drive Set

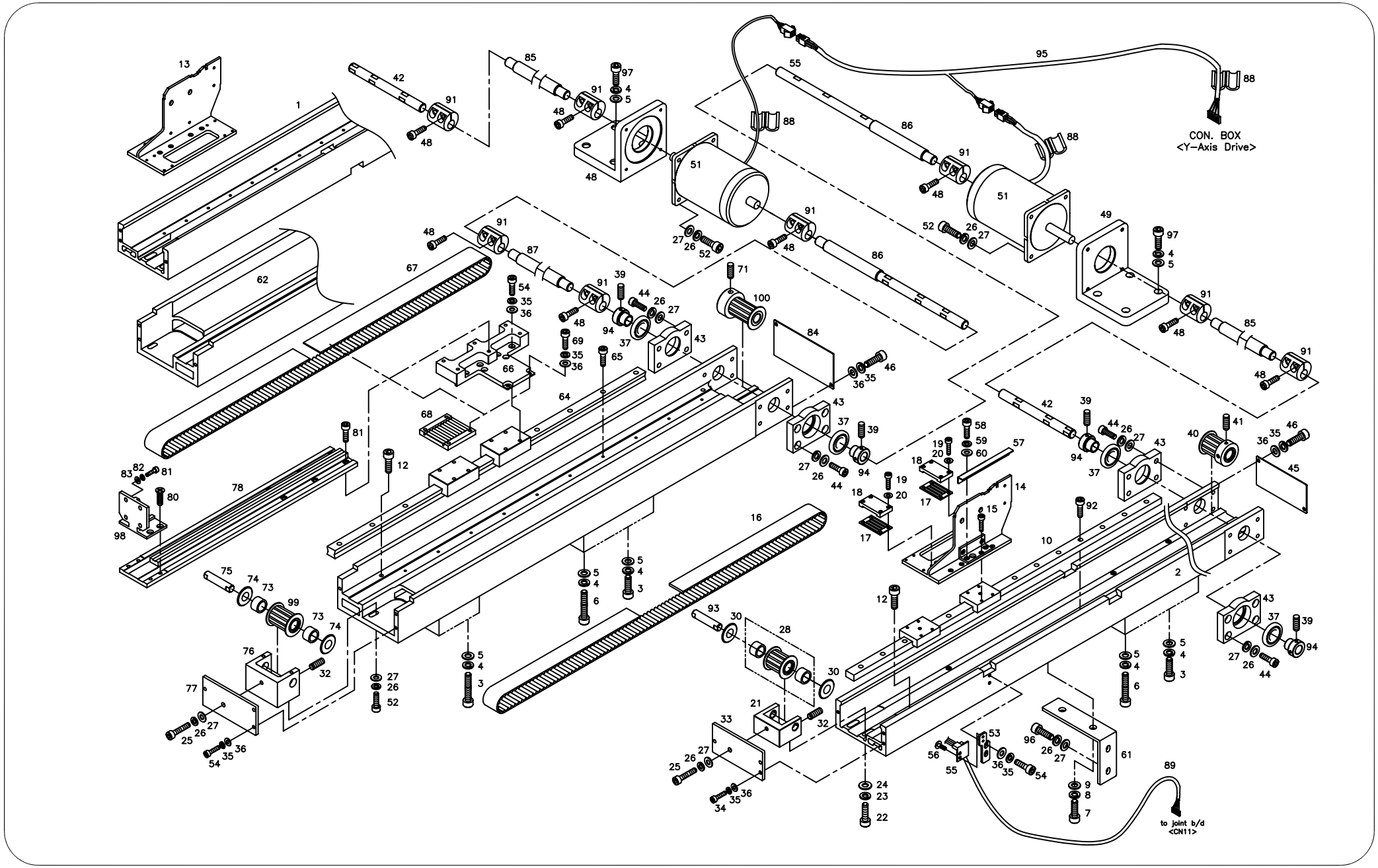

Ref. No	Part No.	Part Names	Q'ty
N-001	16001AD-UK06	Y-Lm Guide Support "A" (L)	1
N-002	16002AD-UK06	Y-Lm Guide Support "A" (R)	1
N-003	15017SC-4113	Hex. Socket Bolt (M8*L45)	16
N-004	15095SW-3115	Spring Washer (@8)	44
N-005	04029SW-A001	Stud Bolt Washer(S) (@8)	60
N-006	15020SC-4113	Hex,Socket Bolt (M8*L50)	4
N-007	14002SC-7113	Hex.Socket Bolt (M6*L15)	4
N-008	16014SW-4115	Spring Washer (@6)	4
N-009	08057SW-1111	Washer (@6)	12
N-010	15021LM-UK01	Y-Lm Guide Ass'Y	2
N-012	14014SC-7113	Hex.Socket Set Screw(M5*L8)	8
N-013	15029PR-UK01	X-Y Connecting Bracket (L)	1
N-014	15030PR-UK01	X-Y Connecting Bracket (R)	1
N-015	07035SC-7113	Bracket Screw (M3*L6)	16
N-016	16019BT-UK06	Y-Drive Timing Belt L=2090	2
N-017	15024PR-UK01	Timing Belt Fixing Plate (Y)	4
N-018	15025AD-UK01	Belt Bracket (Y)	4
N-019	09007SC-7113	Hex. Socket Bolt (M3*L12)	16
N-020	11019SW-9115	Spring Washer (3@)	16
N-021	15035AD-UK01	Pulley Bracket	2
N-022	08091SC-7113	Hex. Socket Bolt (M6*L20)	4
N-023	16014SW-4115	Spring Washer (@6)	4
N-024	08057SW-1111	Washer (@6)	4
N-025	16028SC-7113	Hex. Socket Bolt (M5*L25)	4
N-026	18048SW-3115	Spring Washer (@5)	52
N-027	16018SW-1111	Washer (@5)	52
N-028	12018BR-T121	Neddle Bearing Hk1010(Ina)	4
N-028	15001PU-UK01	Timing Pulley "A"	2
N-030	12019BR-T121	Fiber Washer R-Tw1020	4
N-032	08007SC-4517	Hex. Socket Set Screw (M3*L5)	8
N-033	15031PR-UK01	Frame Cover "A"	2
N-034	07016SC-7113	Hex.Socket Bolt (M4*L12)	6
N-035	02028SW-9115	Spring Washer (@4)	22
N-036	05009SW-1111	Washer (@4-L)	22
N-037	13026BR-T121	Needle Bearing (6002Z)	8
N-039	04012AF-A001	Hook Shaft Bush Screw	16
N-040	15008PU-UK01	Timing Pulley "B"	2
N-041	04014SC-4517	Hex.Socket Set Screw(M5*L5)	8
N-042	16045CW-UK06	Y-Driving Shaft "A" L=160	2
N-043	16046CL-UK06	Y-Bearing Bracket	8

Ref. No	Part No.	Part Names	Q'ty
N-044	08076SC-7113	Hex. Socket Bolt (M5*L12)	32
N-045	15044PR-UK01	Frame Cover "B"	2
N-046	02023SC-7113	Hex. Socket Bolt (M4*L8)	8
N-048	03016SC-4113	Hex. Socket Bolt (M5*L15)	20
N-049	16056CA-UK06	Y-Driving Motor Bracket	2
N-051	16055MT-UK06	Pulse Motor	2
N-052	08062SC-7113	Hex. Socket Bolt (M5*L20)	12
N-053	16064PR-UK01	Sensor Bracket (Y)	1
N-054	02015SC-7113	Hex.Socket Bolt(M4*L10)	24
N-055	09018EL-UK01	Y-Positioning Sensor	1
N-056	08006SC-8118	Plus Screw (M3*L5)	2
N-057	16070PR-UK01	Sensing Plate (Y)	1
N-058	22006SC-7113	Hex. Socket Bolt (M3*L8)	2
N-059	11019SW-9115	Spring Washer (3@)	2
N-060	08011SW-1111	Spring Washer (@3-S)	2
N-061	16074PR-UK06	Y-Lm Support Fixing Plate	2
N-062	16081AD-UK06	Y-Lm Guide Support "B"(L)	1
N-063	16082AD-UK06	Y-Lm Guide Support "B"(R)	1
N-064	16089LM-UK06	Y-Lm Guide "B" L=592	2
N-065	09007SC-7113	Hex. Socket Bolt (M3*L12)	20
N-066	16091CL-UK06	Y-Lm Bracket	2
N-067	16093BT-UK06	Y-Drive Timing Belt "B"	2
N-069	07016SC-7113	Hex.Socket Bolt (M4*L12)	8
N-071	14060AF-4517	Hex.Socket Screw(M6*L6)	8
N-073	15042BR-A001	Needle Bearing (1210Zz)	4
N-074	15046RB-A001	Driving Pin Washer (Tw1225)	4
N-075	16100CW-UK06	Timing Pulley Shaft (Y)	2
N-076	16102AD-UK06	Y-Tension Adjusting Bracket	2
N-077	16106PR-UK06	Tension Adjusting Plate (B)	2
N-078	16113AD-UK06	X-Drive Connecting Plate	2
N-080	02002SC-7119	Pluss Screw (M4*L8)	8
N-081	18013AF-7113	Hex. Socket Bolt (M4*L10)	20
N-082	18014SW-3115	Spring Washer (@4-No2)	8
N-083	18015SW-3111	Washer (4@)	8
N-084	16122PR-UK06	Y-Lm Guide Support Cover (B)	2
N-085	23008SH-UK06	Y Driving Shaft "B" L=689.5	2
N-086	23009SH-UK06	Y Driving Shaft "C" L=322	2
N-087	23010SH-UK06	Y Driving Shaft "D" L=1015	1
N-088	15045EL-UK01	Bid (L)	3
N-089	25054EL-UK01	Cable (25-54)	1

N

Y-Axis Drive Set

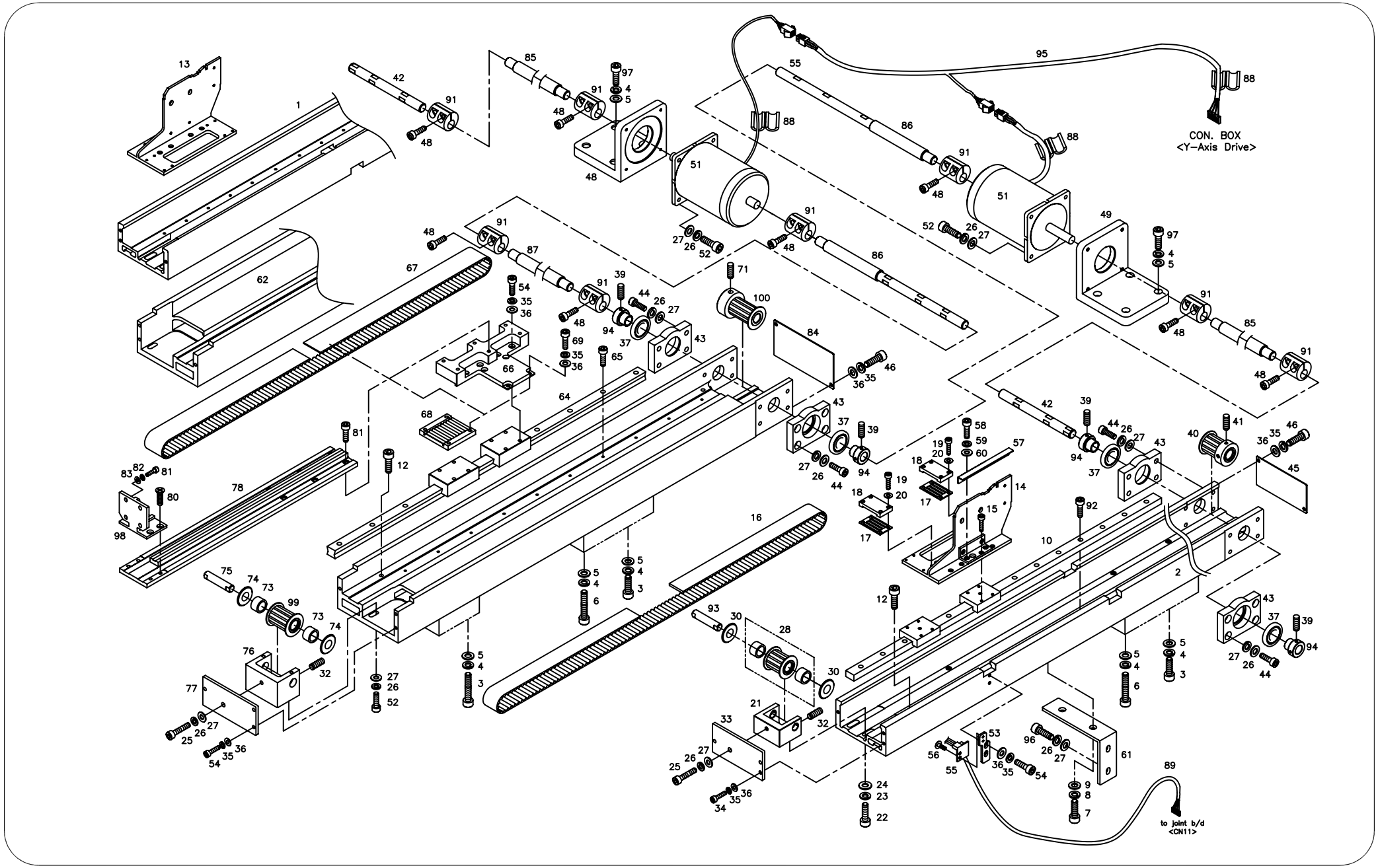

Ref. No	Part No.	Part Names	Q'ty
N-091	03005100U000	Coupling "A"	8
N-092	03071SC-A001	Hex.Scoket Bolt (M3*L15)	30
N-093	03004200U000	Timing Pulley Pin (Y)	2
N-094	03002700T000	Bearing Collar	8
N-095	02101700U060	Cable (Sh-17-3)	1
N-096	08076SC-7113	HEX. SOCKET BOLT (M5*L12)	4
N-097	14027SC-4113	HEX.SOCKET BOLT (M8*L30)	8
N-098	03101600UH80	X-FRAME HOLDER	4
N-099	04500100U000	TIMING PULLEY(16-S5M-32F)	2
N-100	04001000U000	TIMING PULLEY(16-S5M-32F)	2

Ref. No	Part No.	Part Names	Q'ty

O

Tubular Frame

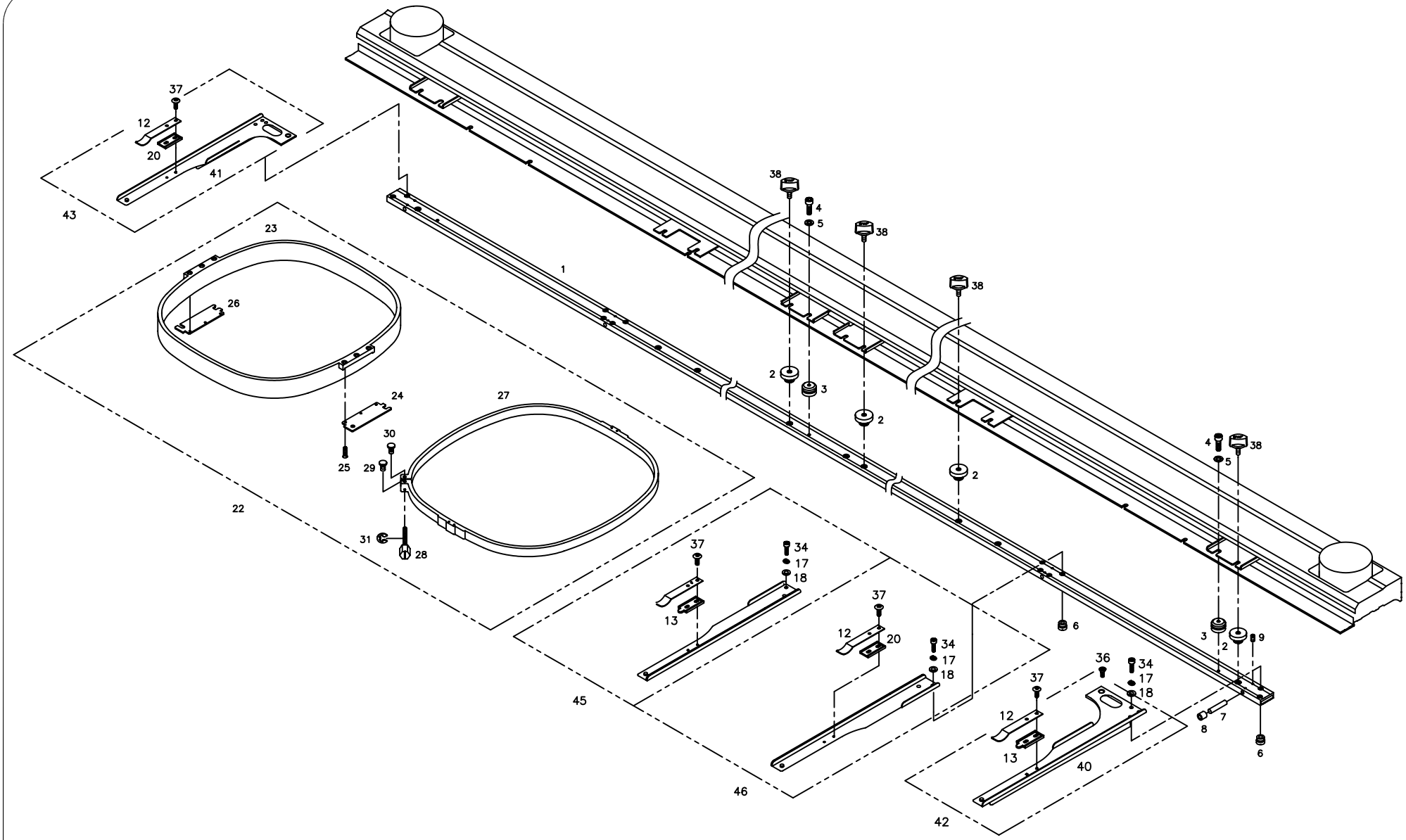

Ref. No	Part No.	Part Names	Q'ty
O-001	22001AD-UK06	Tubular Frame L=3000	1
O-002	22002CW-UK01	Screw Bush "A"	9
O-003	22003CW-UK01	Location Block	3
O-004	11029SC-4113	Hex. Socket Bolt (M4*L20)	3
O-005	05009SW-1111	Washer (@4-L)	3
O-006	10500110B000	SCREW BUSH C (M8*P0.75)	36
O-007	22007BR-UK01	Bearing Pin	7
O-008	22009BR-UK01	Needle Bearing (Taf51010)	7
O-009	03022SC-4517	Hex. Socket Set Screw(M4*L5)	14
O-012	22005PR-T121	Clip	12
O-013	22004PM-T121	Clip Bracket (R)	6
O-017	18014SW-3115	Spring Washer (@4-No2)	24
O-018	18015SW-3111	Washer (4@)	24
O-020	22003PM-T121	Clip Bracket (L)	6
O-022	22038BM-UK01	Tubular Set	12
O-023	22038PM-UK01	Tubular (Inner) 45*44	12
O-024	17014PR-UK01	Tubular Holder "A"	12
O-025	10011SC-8119	Plus Screw (M3*L6)	72
O-026	17015PR-UK01	Tubular Holder "B"	12
O-027	22043PM-UK01	Tubular (Outer) 45*44	12
O-028	22044CW-UK01	Adjusting Bolt	12
O-029	22045CW-UK01	Adjusting Bolt Guide	12
O-030	22046CW-UK01	Adjusting Nut	12
O-031	15159SR-4013	E-Ring (3@)	12
O-034	02015SC-7113	Hex.Socket Bolt(M4*L10)	24
O-036	02002SC-7119	Pluss Screw (M4*L8)	2
O-037	09100200U000	Fixed Clip Bracket Screw	24
O-038	09000100U000	Tubular Frame Fixing Screw	9
O-040	09100100U000	Attachment (R)	1
O-041	09200100U000	Attachment (L)	1
O-042	09100000U000	Attachment (R)	1
O-043	09200000U000	Attachment (L)	1
O-045	09100410U000	Attachment (Set-L)	5
O-046	09100510U000	Attachment (Set-R)	5

Ref. No	Part No.	Part Names	Q'ty

P

Border Frame

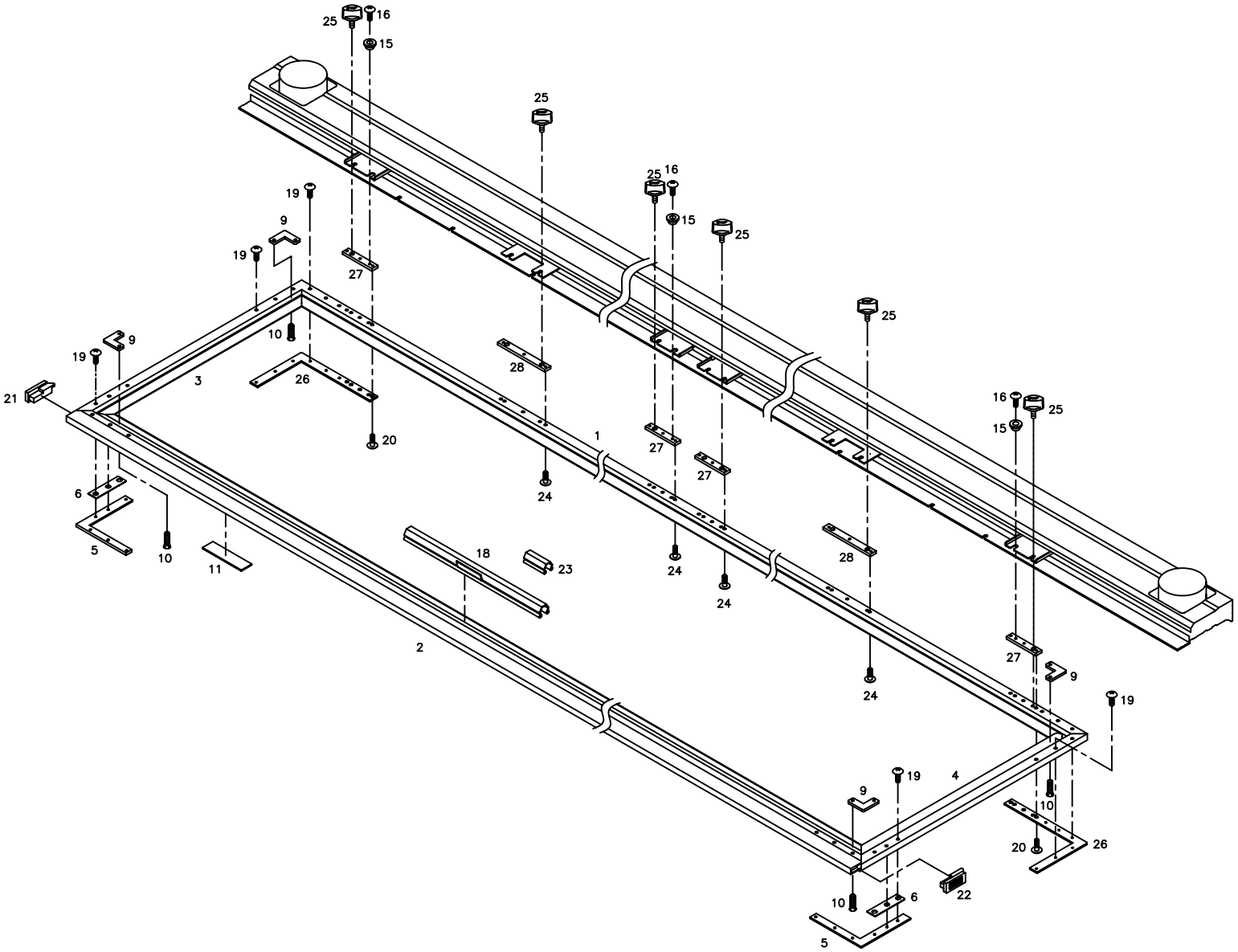

Ref. No	Part No.	Part Names	Q'ty
P-001	24001AD-UK06	Square Frame (A)	1
P-002	24004AD-UK06	Square Frame (B) L=3152	1
P-003	24007AD-UK06	Square Frame (D) L=583	1
P-004	24006AD-UK06	Square Frame (C) L=583	1
P-005	24008PR-UK06	Connecting Plate (F)	2
P-006	24005PR-UK06	Frame Space	2
P-009	24011PR-T121	Connecting Plate "C"	4
P-010	10010SC-8119	Plus Screw (M3*L5)	8
P-011	24016SF-T121	Felt	23
P-015	18025PM-UK01	Location Block	3
P-016	18153SC-3123	Plus Screw (M4*L10)	3
P-018	18084PR-A001	Embroidery Frame Clip L,300	16
P-018	18085PR-A001	Embroidery Frame Clip	6
P-018	18085PR-T121	Embroidery Frame Clip L,220	2
P-019	02044SC-3123	Truss Screw (M5*L8)	24
P-020	15042SC-3123	Truss Screw (M4*L6)	6
P-021	24026RB-UK06	Rubber Cap (L)	1
P-022	24027RB-UK06	Rubber Cap (R)	1
P-023	18086PR-B001	Frame Clip Support	48
P-024	02010SC-3123	Truss Screw (M4*L8)	12
P-025	09000100U000	Tubular Frame Fixing Screw	9
P-026	24004PR-UK02	Connecting Plate "E"	2
P-027	24008PR-UK02	SQUARE FRAME FIXIING PLATE A	4
P-028	24011PR-UK02	SQUARE FRAME FIXIING PLATE B	2

Ref. No	Part No.	Part Names	Q'ty

Q

S/B Switch Unit

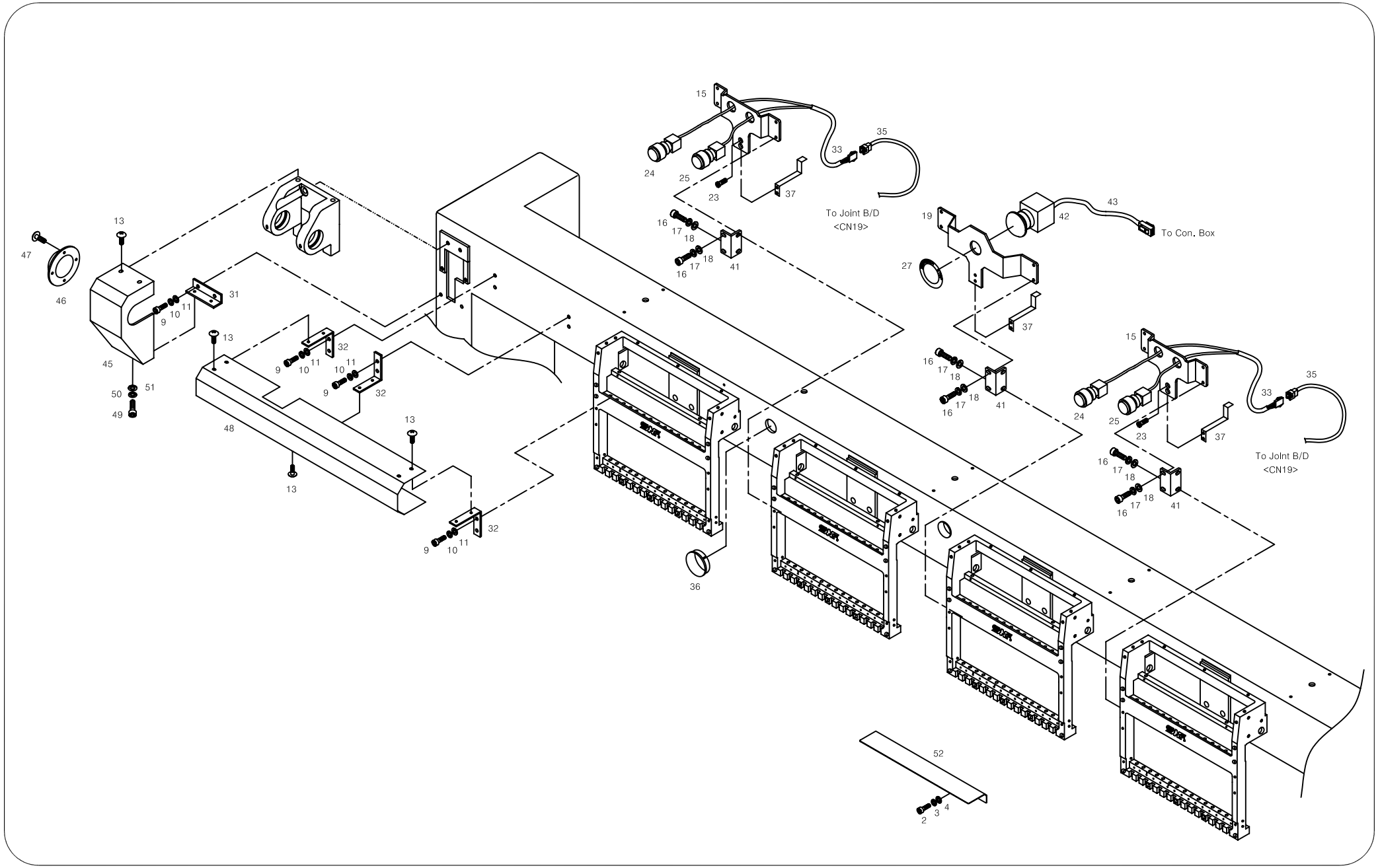

Ref. No	Part No.	Part Names	Q'ty
Q-002	02015SC-7113	Hex.Socket Bolt(M4*L10)	4
Q-003	02028SW-9115	Spring Washer (@4)	4
Q-004	05009SW-1111	Washer (@4-L)	4
Q-009	02031SC-7113	Hex. Socket Screw(M5*L10)	4
Q-010	18048SW-3115	Spring Washer (@5)	4
Q-011	16018SW-1111	Washer (@5)	4
Q-013	15042SC-3123	Truss Screw (M4*L6)	7
Q-015	02024LA-UK14	S/B Switch Base	3
Q-016	14002SC-7113	Hex.Socket Bolt (M6*L15)	10
Q-017	16014SW-4115	Spring Washer (@6)	10
Q-018	08057SW-1111	Washer (@6)	10
Q-019	02028LA-UK14	Emergency Switch Base	2
Q-022	02023SC-7113	Hex. Socket Bolt (M4*L8)	10
Q-023	15089SC-7119	C.S Screw (M4*L10)	5
Q-024	02027EL-UK01	S/B Switch Set	3
Q-025	02026EL-UK01	Start Switch Set	3
Q-027	02103ET-UK01	Emergency Switch Sticker	2
Q-028	02102ET-UK01	S/B Switch Sticker	3
Q-031	02031PR-UK02	Pulley Cover Bracket	1
Q-032	02025PR-UK02	Top Shaft Cover (C) Bracket L	3
Q-033	25028EL-UK06	Cable (25-28)	3
Q-035	25027EL-UK06	Cable (25-27)	1
Q-036	02017PM-A001	Cable Ring	6
Q-037	02062PR-UI12	Cable Holder	5
Q-041	04000102UK00	Switch Base Holder 6C	6
Q-041	04000104UK00	Switch Base Holder	6
Q-042	02000800T000	Emergency Switch Set	2
Q-043	02106400U000	Emeguncy S/W Cable	2
Q-045	01001000UK00	Top Shaft Pulley Cover	1
Q-046	01001100UK00	Top Shaft Pulley Cover B	1
Q-047	09005SC-3123	Truss Screw (M3*L6)	4
Q-048	01000710UK60	TOP SHAFT COVER	1
Q-049	02023SC-7113	HEX.SOCKET BOLT (M4*L8)	2
Q-050	18014SW-3115	SPRING WASHER (@4-NO2)	2
Q-051	18015SW-3111	WASHER (4@)	2
Q-052	01000214UK00	SURFACE COVER "B"	1

Ref. No	Part No.	Part Names	Q'ty

R

Sub Control Unit & Lamp

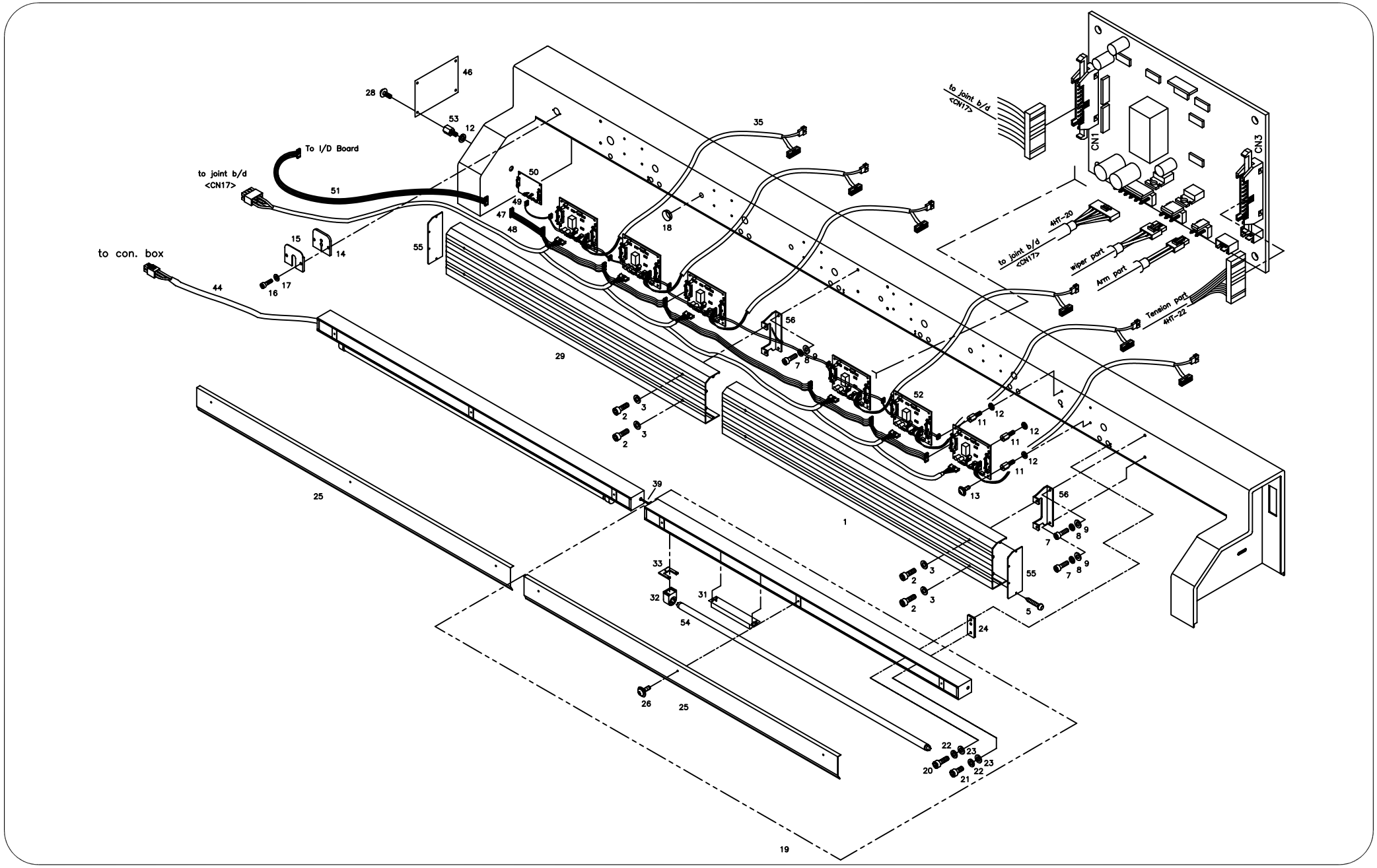

Ref. No	Part No.	Part Names	Q'ty
R-001	02057AD-A102	Borard Cover L=1599	2
R-002	02031SC-7113	Hex. Socket Screw(M5*L10)	8
R-003	18049SW-3111	Washer (@5)	8
R-005	02065SC-3328	Tapping Screw (M3*L10)	8
R-007	08076SC-7113	Hex. Socket Bolt (M5*L12)	8
R-008	18048SW-3115	Spring Washer (@5)	8
R-009	16018SW-1111	Washer (@5)	8
R-011	11049SC-A001	Board Stud Bolt	28
R-012	18048SW-3115	Spring Washer (@5)	28
R-013	18154SC-9134	PLUS SCREW (M3*L8)	24
R-014	02054RB-UK01	Clamp Rubber	1
R-015	02053PR-UK01	Cable Clamp	1
R-016	18013AF-7113	Hex. Socket Bolt (M4*L10)	2
R-017	18049SW-3111	Washer (@5)	2
R-018	02017PM-A001	Cable Ring	5
R-019	20008BM-A001	Lamp Ass,Y "B"	2
R-020	03016SC-4113	Hex. Socket Bolt (M5*L15)	8
R-021	02031SC-7113	Hex. Socket Screw(M5*L10)	4
R-022	18048SW-3115	Spring Washer (@5)	12
R-023	16018SW-1111	Washer (@5)	12
R-024	20001PR-A001	Lamp Ass'Y Connecter	4
R-025	20009PR-A001	Reflecting	2
R-026	02010AF-3123	Truss Screw (M4*L8)	6
R-028	09005SC-3123	Truss Screw (M3*L6)	4
R-029	02093AD-UK06	Board Cover "A"	1
R-031	20016EL-A001	Ballast	2
R-032	20014ET-A001	Lamp Socket	4
R-033	20012PR-A001	Lamp Socket Fixed Plate	4
R-035	25022EL-UK01	To Adjusting Plate (4Ht-22)	6
R-039	25053EL-UK06	Cable (25-53)	1
R-044	02105000E040	Cable(Ce4Ht-50)	1
R-046	22033EL-T126	Joint Board (Sh-Jnt) Ver2.3	1
R-047	02105700U060	Cable (Sh-57-4)	1
R-048	02105600U060	Cable (Sh-56-4)	1
R-049	02106000U060	Cable (Sh-60-4)	1
R-050	03-0000-HB11	Thread Control Joint Board	1
R-051	02105900U000	Sh-59	1
R-052	11093EL-C001	SUB-CONTROL BOARD	6
R-053	02001400T000	JOINT BOARD STUD BOLT M4*L10	4
R-054	20009EL-B001	LAMP (32W)	2

Ref. No	Part No.	Part Names	Q'ty
R-055	12000200B000	CABLE COVER PLATE	2
R-056	02000400B000	CABLE COVER HOLDER	4

S

Main Controller

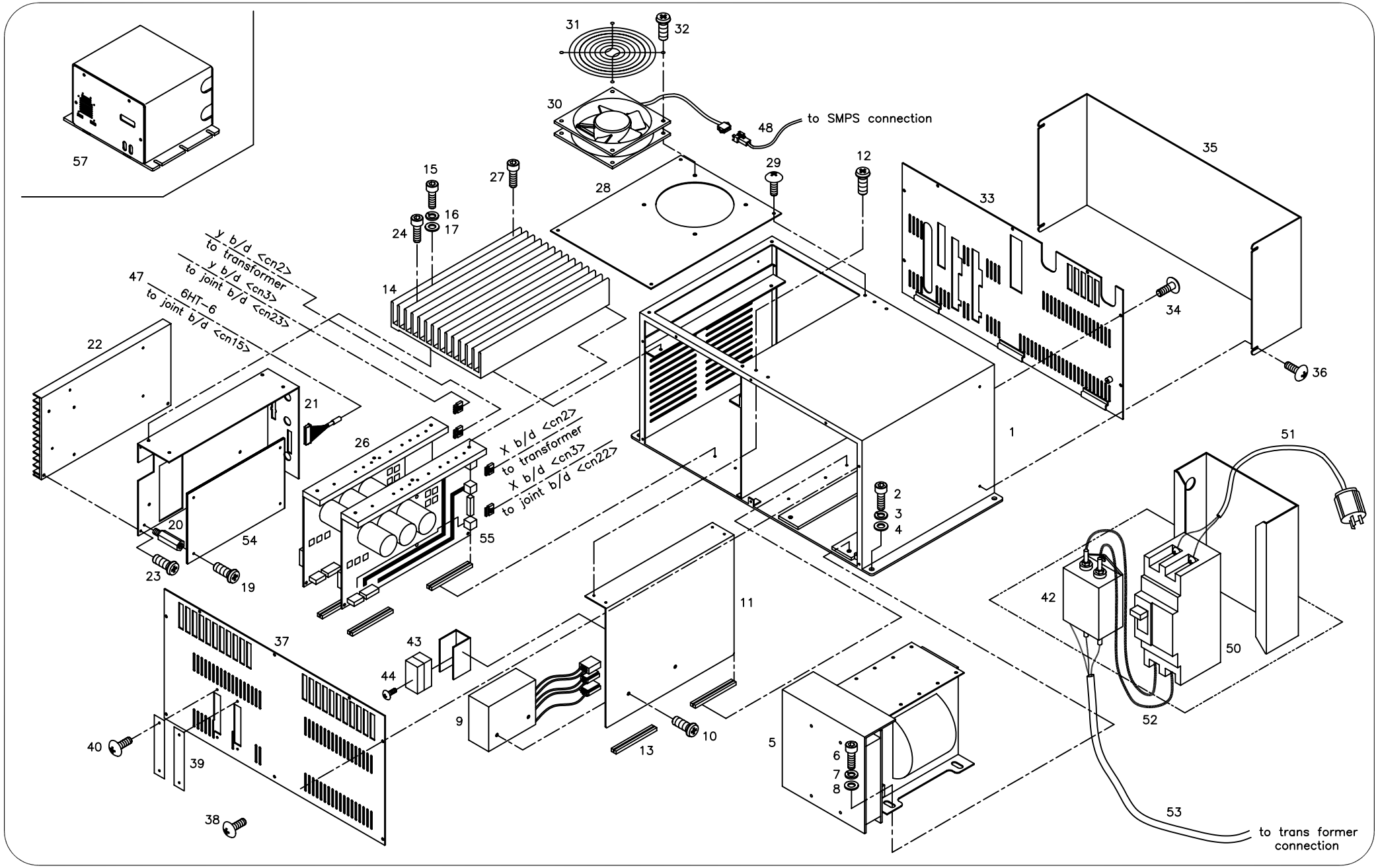

Ref.No	Part No.	PartNames	Q'ty
S-001	01-001A-AU12	Control Box	1
S-002	08091SC-7113	Hex. Socket Bolt (M6*L20)	4
S-003	16014SW-4115	Spring Washer (@6)	4
S-004	08057SW-1111	Washer (@6)	4
S-005	01-004A-AU12	Transfomer (4Head)	1
S-006	16059SC-7113	Hex.Socket Bolt (M6*L12)	4
S-007	16014SW-4115	Spring Washer (@6)	4
S-008	08057SW-1111	Washer (@6)	4
S-009	GP-007473-00	SMPS	1
S-010	22025SC-9134	Screw (M4*L10)	2
S-011	01-006B-AU12	Smps Bracket	1
S-012	01-002A-AU12	Control Box Front Cover	4
S-013	01-007B-AU12	Rack Card Guide	6
S-014	01-101A-SW67	Heat Sink (T)	1
S-015	05008AF-4113	Hex.Socket Bolt(M4*L16)	4
S-016	02028SW-9115	Spring Washer (@4)	4
S-017	02063SW-1111	Washer(@4)	4
S-019	09005SC-3123	Truss Screw (M3*L6)	5
S-020	01-001M-AU12	Stud	5
S-021	01-003B-AU12	Main Board Bracket	1
S-022	01-007A-AU12	Heat Sink	1
S-023	09005SC-3123	Truss Screw (M3*L6)	4
S-024	02015SC-7113	Hex.Socket Bolt(M4*L10)	6
S-026	01-007A-SW70	P.C.B Bracket	2
S-027	05008AF-4113	Hex.Socket Bolt(M4*L16)	6
S-028	01-007S-AU12	Top Cover	1
S-029	09005SC-3123	Truss Screw (M3*L6)	4
S-030	01-002A-AT01	Cooling Fan	1
S-031	01-002B-AU12	Fan Cover	1
S-032	01-002M-AU12	Plus Screw (M4*L35)	4
S-033	01-003A-AU12	Control Box Rear Cover	1
S-034	09005SC-3123	Truss Screw (M3*L6)	7
S-035	01-008B-AU12	Connector Cover	1
S-036	09005SC-3123	Truss Screw (M3*L6)	4
S-037	01-002A-AT12	Front Cover	1
S-038	09005SC-3123	Truss Screw (M3*L6)	8
S-039	02-001B-SW67	Switch Cover	2
S-040	09005SC-3123	Truss Screw (M3*L6)	4
S-042	GP-007476-00	NOISE FILTER (MAS-1206-33)	1
S-043	03-005B-SW62	Fuse Holder	1

Ref. No	Part No.	Part Names	Q'ty
S-044	22025SC-9134	Screw (M4*L10)	1
S-047	25007EL-UK06	Cable (25-07)	1
S-048	25008EL-UK01	Smps To Fan Con. Cable 4Ht-8	1
S-050	05000300T000	Main Power S/W (Abs52Bf-10A)	1
S-051	02100100E040	Main Cable (Ce4Ht-1)	1
S-052	02100300E040	Switch To Filtter (Ce4Ht-3)	1
S-053	02105500E040	Noise Filter - Mc1St Connet	1
S-054	10-0000-MD00	MAIN B/D (SD-MMD16)	1
S-055	04-0000-SD00	X-Y BOARD	2
S-057	SWF-BU-1206	CONTROL BOX (6HEAD)	1

T

Operation Unit

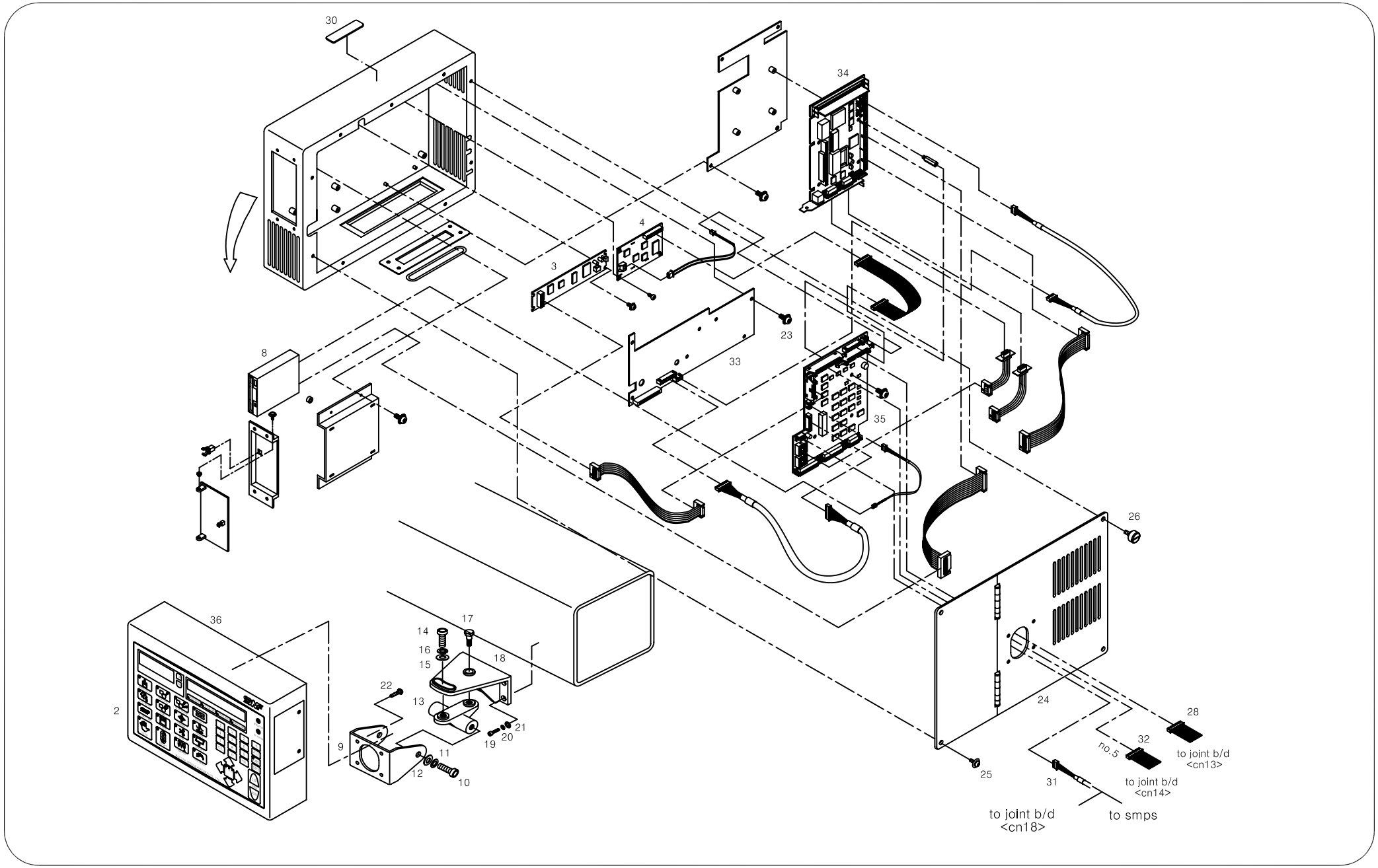

Ref. No	Part No.	Part Names	Q'ty
T-002	10-003A-AT10	Membrane Switch	1
T-003	01-003A-AT01	Vfd	1
T-004	01-004A-AT01	Lcd	1
T-008	10-004A-AT10	Fdd	1
T-009	19033PR-T121	Operation Box Hinge Bracket	1
T-010	08087SC-7113	Hex. Socket Bolt (M8*L25)	2
T-011	15095SW-3115	Spring Washer (@8)	2
T-012	08041SW-1111	Washer (@8-S)	2
T-013	19035CA-T121	Hinged Block	1
T-014	08087SC-7113	Hex. Socket Bolt (M8*L25)	1
T-015	15095SW-3115	Spring Washer (@8)	1
T-016	08041SW-1111	Washer (@8-S)	1
T-017	19039CW-T121	Adjusting Bolt	1
T-018	19040CA-UK01	Holder	1
T-019	15030SC-7113	Hex. Socket Bolt (M5*L30)	4
T-020	18048SW-3115	Spring Washer (@5)	4
T-021	16018SW-1111	Washer (@5)	4
T-022	22033SC-7134	Plus Screw (M5*L12)	4
T-023	09005SC-3123	Truss Screw (M3*L6)	5
T-024	10-007A-AT10	Operation Box Cover	1
T-025	02010AF-3123	Truss Screw (M4*L8)	4
T-026	15120SC-A001	Position Adjusting Screw	3
T-028	25046EL-UK01	Joint-Io B/D 34P	1
T-030	09000300B000	Magnet Sticker	1
T-031	02100500E040	Smps Box To Joint & Pc Power	1
T-032	02106100U000	Joint Board To Io Board 30P	1
T-033	02-1000-LD00	LED BOARD	1
T-034	02-100A-AT01	CPU CARD (ROCKY-386) ASS'Y	1
T-035	03-0000-IO00	SH-I/O B/D ASS'Y	1
T-036	19013BM-T121	OPERATION BOX	1

Ref. No	Part No.	Part Names	Q'ty

U

Bobbin Winder

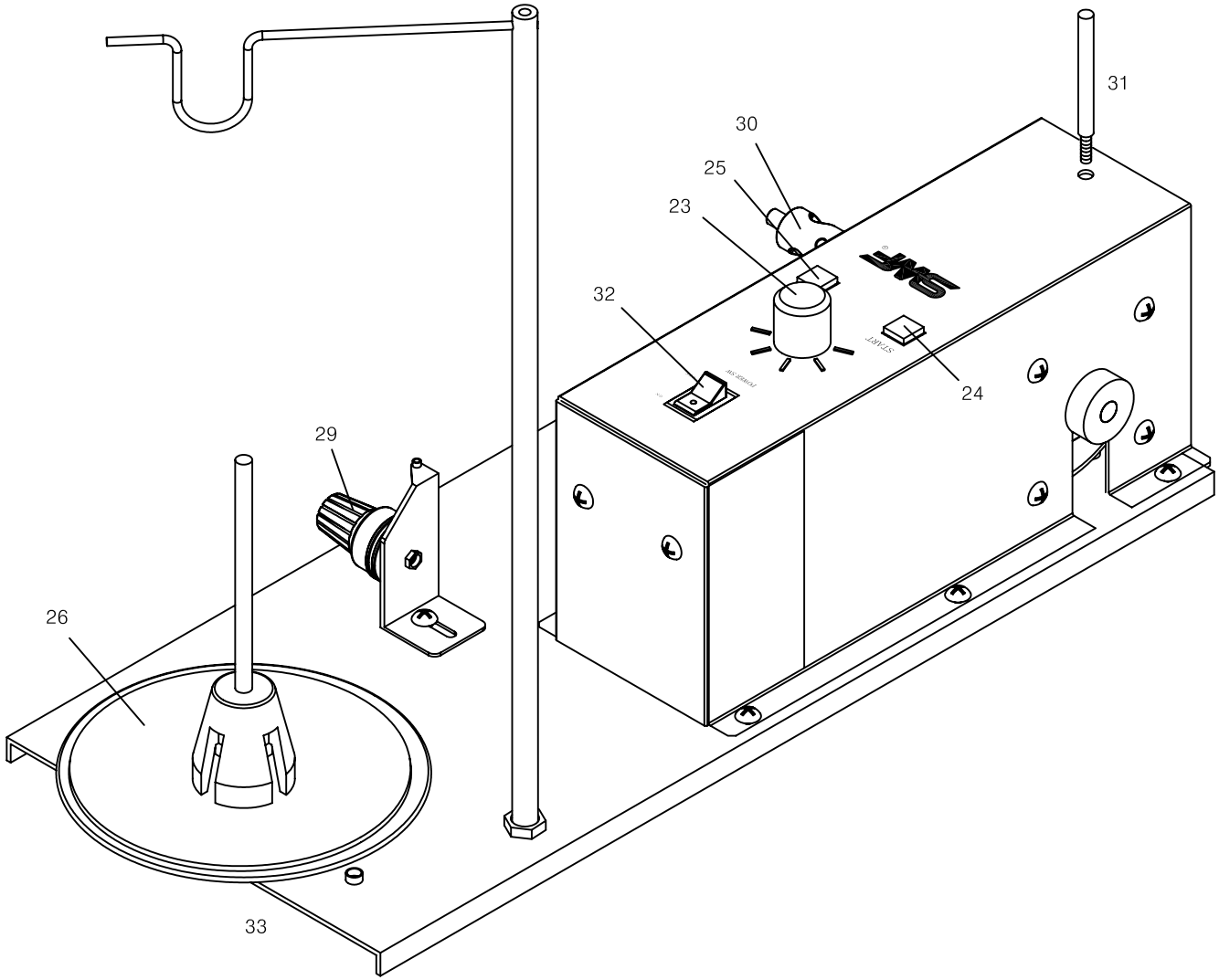

Ref. No	Part No.	Part Names	Q'ty
U-022	23001EL-B001	On/Off Switch	1
U-023	23002EL-B001	Timer	1
U-024	23003EL-B001	Start Switch	1
U-025	23004EL-B001	Stop Switch	1
U-026	23005BM-B001	Spool Post	1
U-029	23008BM-B001	Tension Adjusting Set	1
U-030	23009CW-B001	Bobbin Shaft	1
U-031	02026SC-A001	Bobbin Stand	1
U-033	23002BM-B001	Bobbin Winder	1

Ref. No	Part No.	Part Names	Q'ty