SWF

PARTS BOOK

DM-Series
Tubular-small

DM-UK1506-45

PME-130611

SWF

Notice

1. 본 책자는Parts Book으로 제작되었으므로 매뉴얼로 사용 불가합니다.
2. 조에 속한 파트는 개별 조립 시 제품의 파손 또는 자수 불량이 발생될 수 있어
   해당 파트에 대한 주문 시에는 조 품목으로만 구입이 가능합니다.
3. 당사의 Part Book은 다음과 같은 순서로 분류되어 있으니
   제품을 구입한 소비자께서는 다음과 같은 순서로 제품을 검색하여 주십시오.

   1) Machine Layout
   2) Section
   3) Part List

※소모성 부품은 자수 기계의 보증 기간과 상관 없음.

1. This is a parts book. It cannot be used as a manual.
2. The parts classified as ass'y items may cause damage to the machine or
   bad embroidery when they are separately assembled.
   Hence, when they are ordered, they can be purchased as ass'y items only.
3. The Part Book is classified as below and users could search products in the following order.

   1) Machine Layout
   2) Section
   3) Part List

※Consumable parts shall not be guaranteed even in warranty period

Information

A. Structure of Part Book
1. Machine Layout

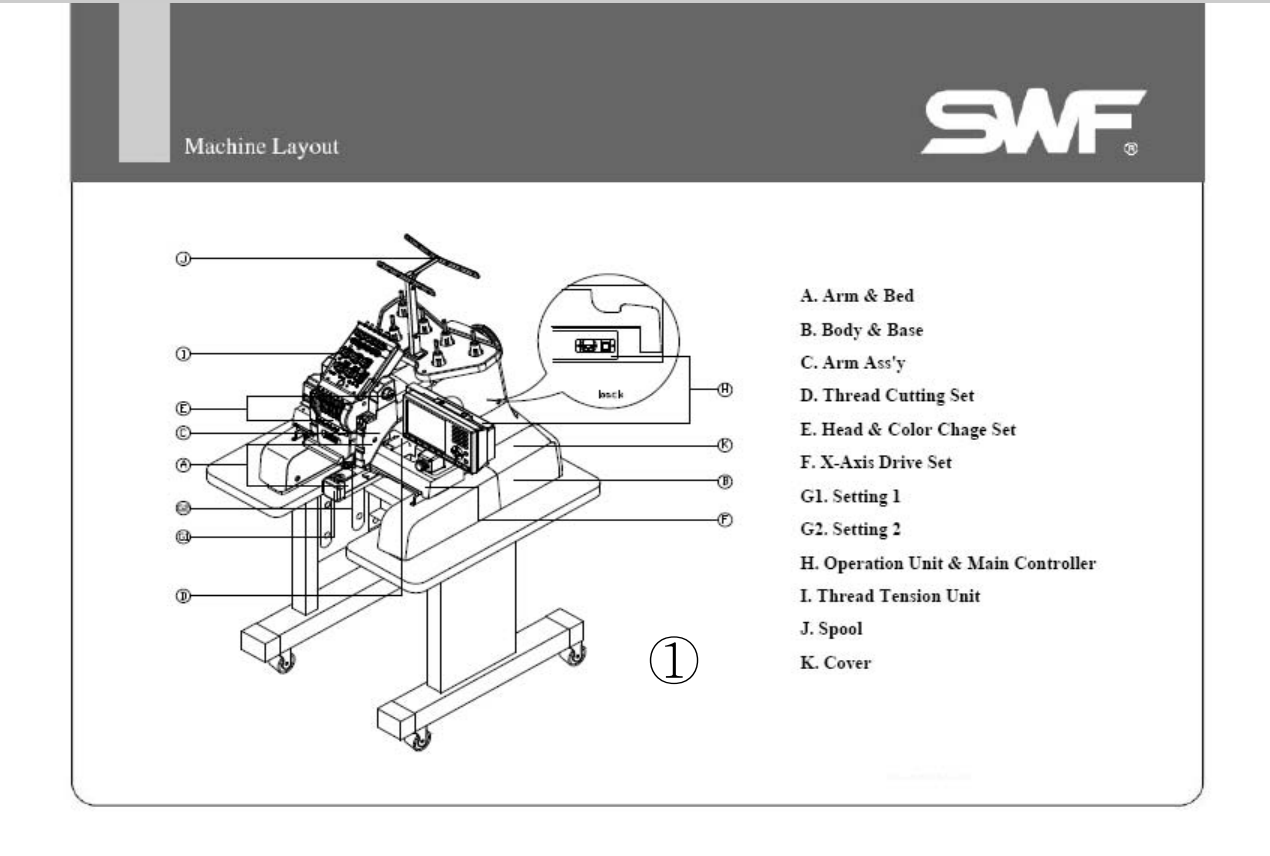

Information

A. Structure of Part Book
  2. Section
    ① : Index Number
    ② : Index Group
    ③ : Related Parts
      Ex) A-1, A-2, A-3...

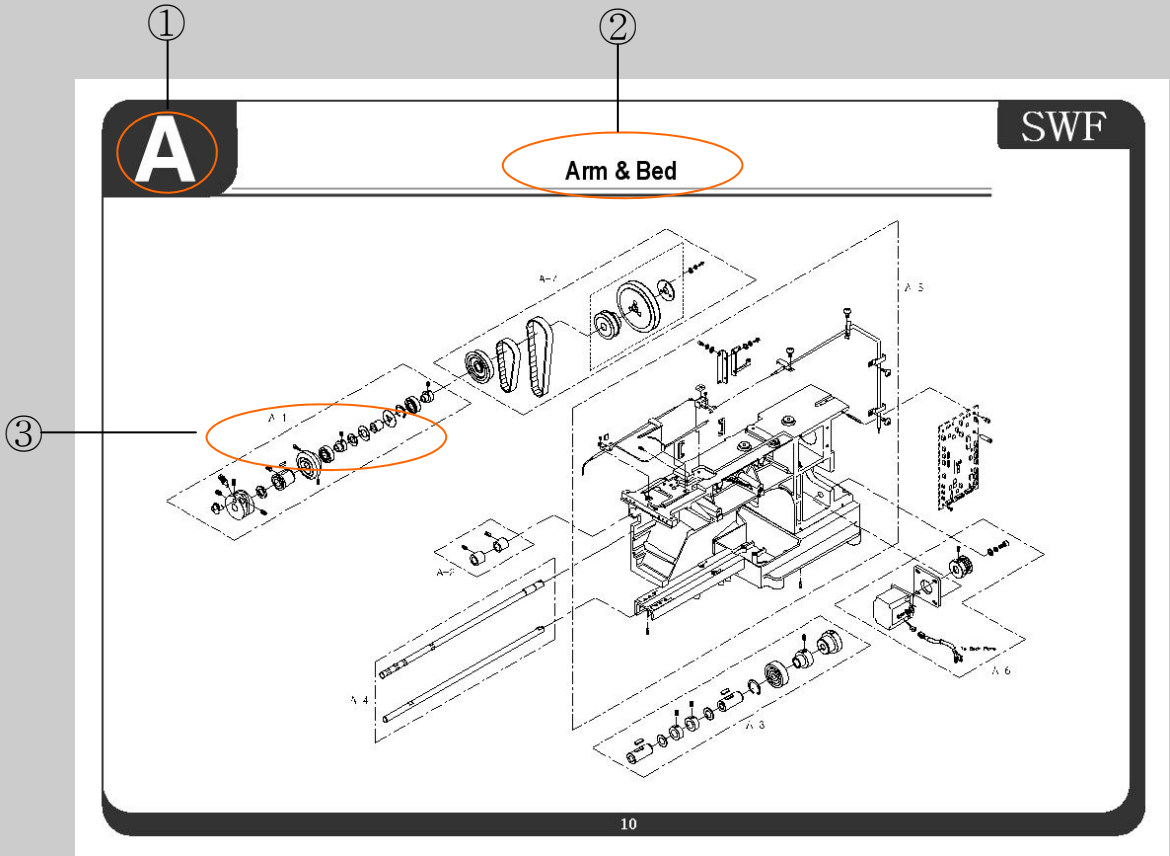

Information

A. Structure of Part Book
3. Part List

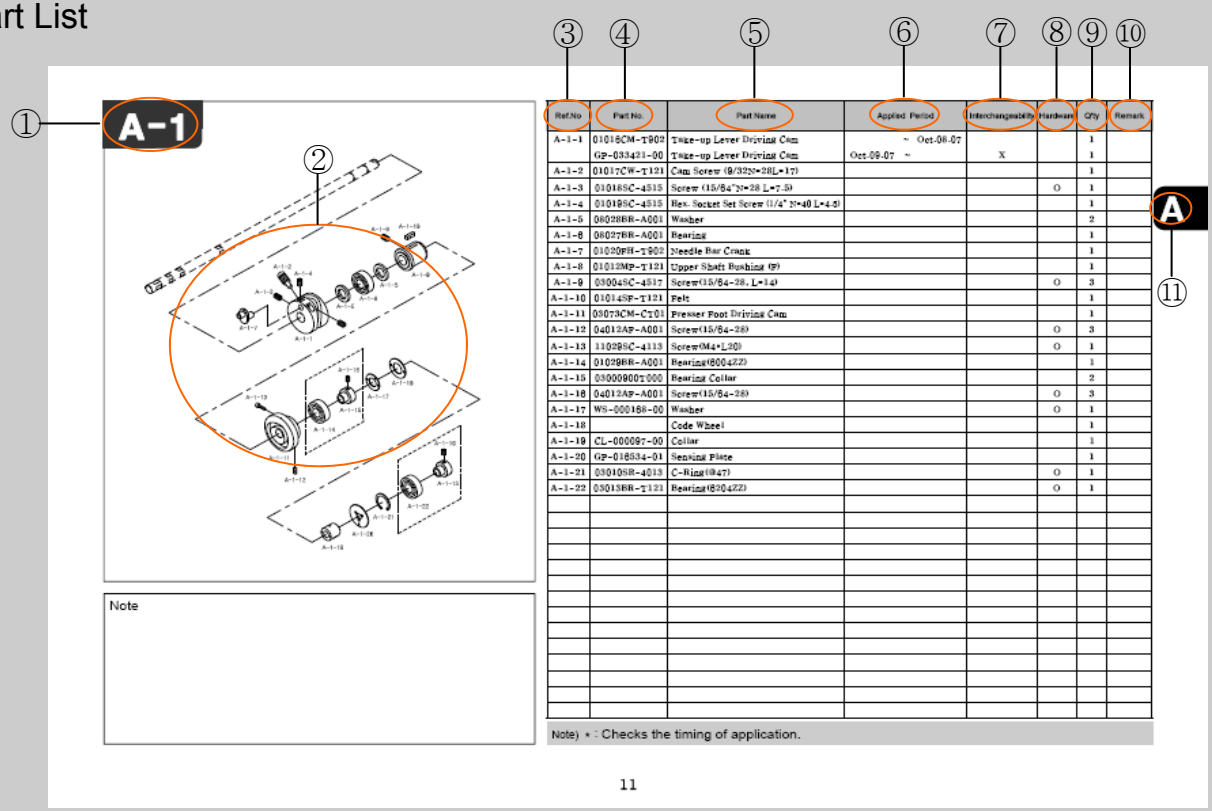

A-1

Note

Ref.No	Part No.	Part Name	Applied Period	Interchangeability	Hardware	Qty	Remark
A-1-1	01016CM-T902	Take-up Lever Driving Cam	~ Oct-08-07			1	
	GP-033421-00	Take-up Lever Driving Cam	Oct-09-07 ~	X		1	
A-1-2	01017CW-T121	Cam Screw (9/32N*28L*17)				1	
A-1-3	010188C-4515	Screw (15/64"N*28 L*7.5)			O	1	
A-1-4	010198C-4515	Hex. Socket Set Screw (1/4" N*40 L*4.5)				1	
A-1-5	06028BR-A001	Washer				2	
A-1-6	06027BR-A001	Bearing				1	
A-1-7	01020FH-T902	Needle Bar Crank				1	
A-1-8	01012MP-T121	Upper Shaft Bushing (9)				1	
A-1-9	030048C-4517	Screw(15/64-28, L=14)			O	3	
A-1-10	01014SF-T121	Felt				1	
A-1-11	03073CM-CT01	Presser Foot Driving Cam				1	
A-1-12	04012AP-A001	Screw(15/64-28)			O	3	
A-1-13	110298C-4115	Screw(M4*L20)			O	1	
A-1-14	01029BR-A001	Bearing(6004ZZ)				1	
A-1-15	03000900T000	Bearing Collar				2	
A-1-16	04012AP-A001	Screw(15/64-28)			O	3	
A-1-17	WS-000168-00	Washer			O	1	
A-1-18		Code Wheel				1	
A-1-19	CL-000097-00	Collar				1	
A-1-20	GP-016534-01	Sensing Plate				1	
A-1-21	030108R-4015	C-Ring(Ø47)			O	1	
A-1-22	03013BR-T121	Bearing(6204ZZ)			O	1	

Note) * : Checks the timing of application.

11

① Index Number
Ex) A-1, A-2...

② Parts View

Information

A. Structure of Part Book

③ Ref. No

④ Part No

Ex)

Category	CODE	Remark
Old part	16009SC-4113	
New part	**AS**-000000-00	Set parts (Set 구성품)
	GP-000000-00	Instrumental parts (기구적 파트)
	EP-000000-00	Electrical parts (전기적 파트)

⑤ Parts Name : 파트들의 고유 품명을 표기

: Refers to unique names of parts

⑥ Applied Period

Ex1) 2007년2월10일 적용, 2008년7월10일 폐기

-> Feb.10.07 ~ Jul.10.08

Ex1) Applied from Feb. 10, 2007, To on July 10, 2008

-> Feb.10.07 ~ Jul.10.08

Ex2) 2007년 2월 10일 부터 파트북 발행일 까지 적용

-> Feb.10.07 ~

Ex2) Applied from Feb. 10, 2007

-> Feb.10.07 ~

Information

A. Structure of Part Book

⑦ Interchangeability

O : 구 부품을 신 부품으로 교환 가능
신 부품을 구 부품으로 교환 가능
: It is interchangeable between old and new part.

X : 구 부품을 신 부품으로 교환 불가능
신 부품을 구 부품으로 교환 불가능
: It is not interchangeable between old and new part.

△ : 구 부품을 신 부품으로 교환 가능
신 부품을 구 부품으로 교환 불가능
: It is interchangeable by new part only.

⑧ Hardware : 시중에서 구매 할 수 있는 부품
: Parts that can be purchased in the market

⑨ Q'ty : 사용 파트의 수량을 표기
: Quantity of part

⑩ Remark

⑪ Index Number

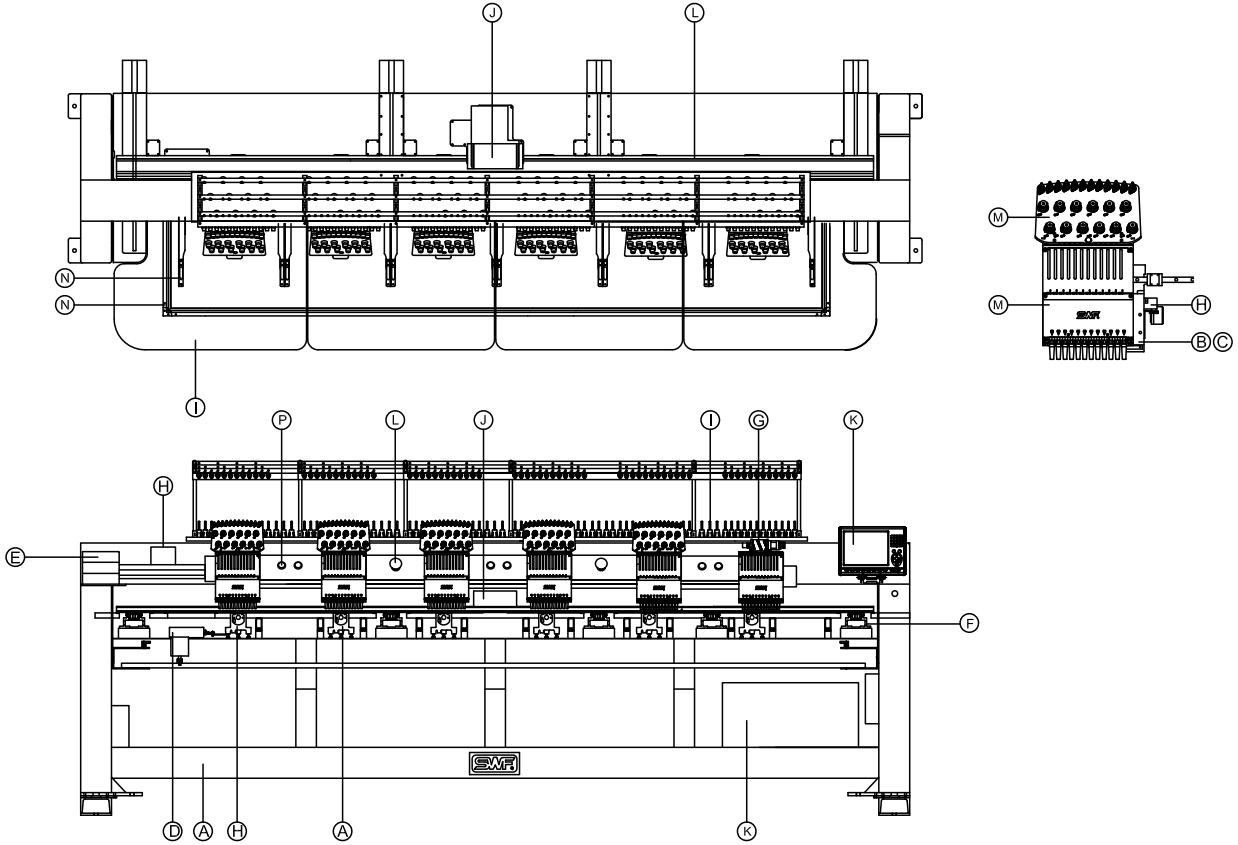

A.Beam Body & Bed
B. Arm 1
C. Arm 2
D. Thread Cutting Set
E. Main Drive System
F. Y-Axis
H. Setting
I. Spool & Table
J. X-Axis
K. Con Box & O/P Box
L. LAMP & SWITCH
M. Thread Tension Unit
N. Tubular & Border Frame
P. COVER

CONTENT

A	Beam Body & Bed	10
B	Arm 1	13
C	Arm 2	20
D	Thread Cutting Set	28
E	Main Drive System	32
F	Y-Axis	35
G	Head & Color Change	42
H	Setting	49
I	Spool & Table	56
J	X-Axis	62
K	Con Box & O/P Box	67
L	Lamp & Switch	72
M	Thread Tension Unit	78
N	Tubular & Border Frame	82
O	Bobbin Winder	85
P	Cover	88
Q	Index	92

A

SWF

Beam Body & Bed

A-1

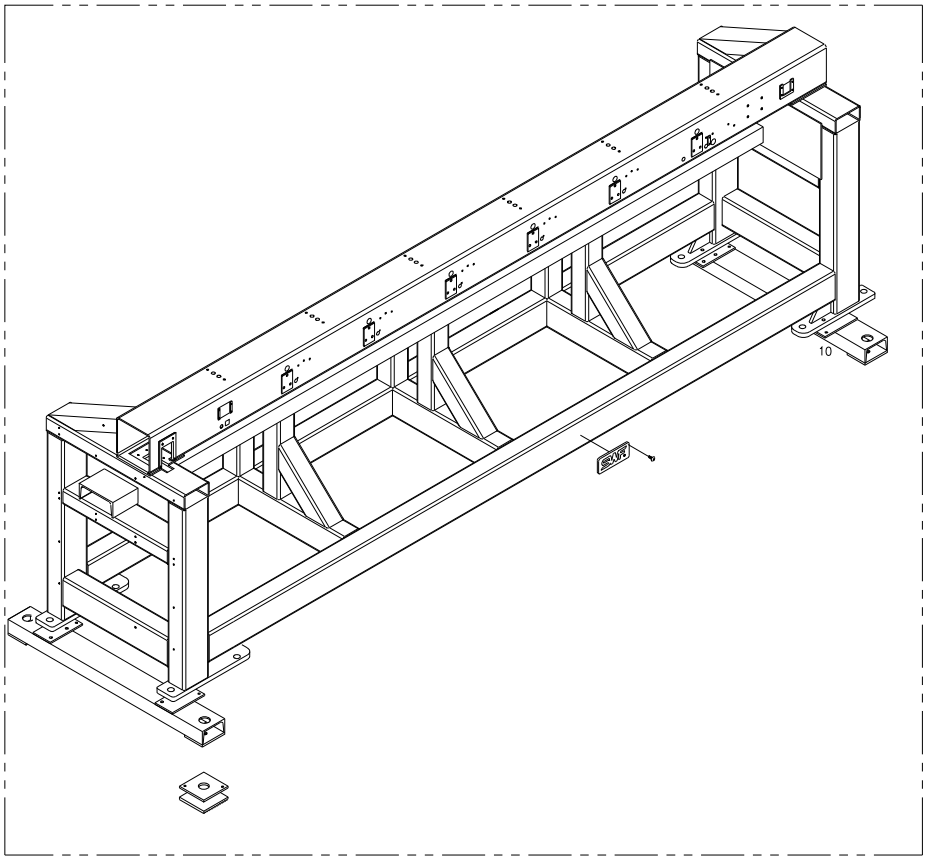

A-2

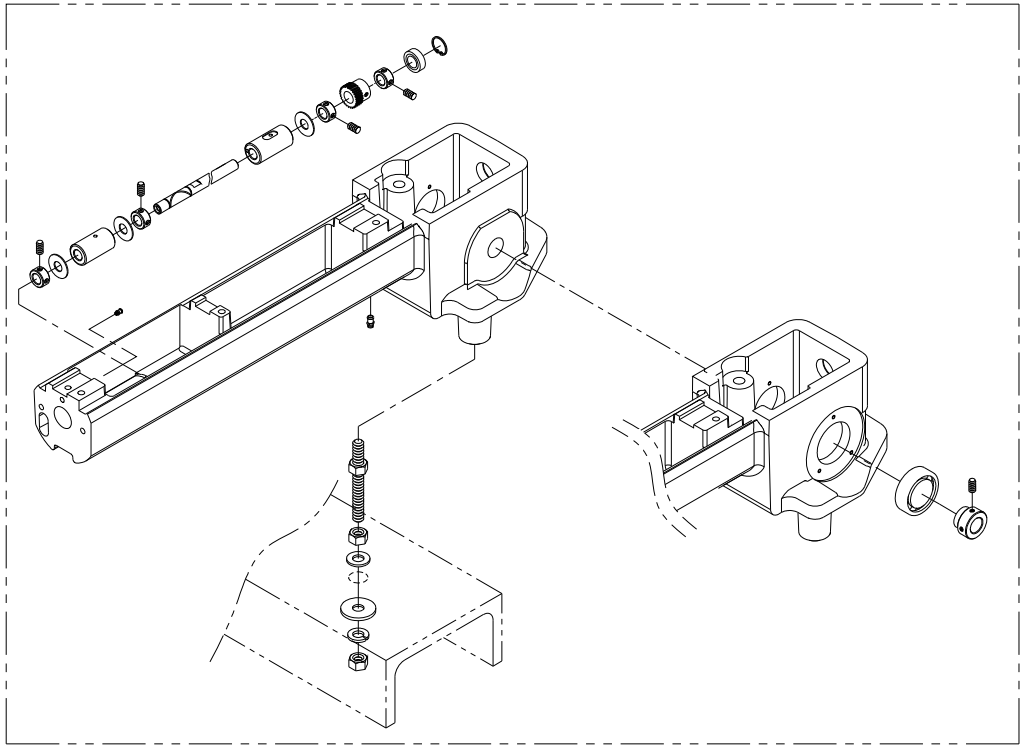

A-1

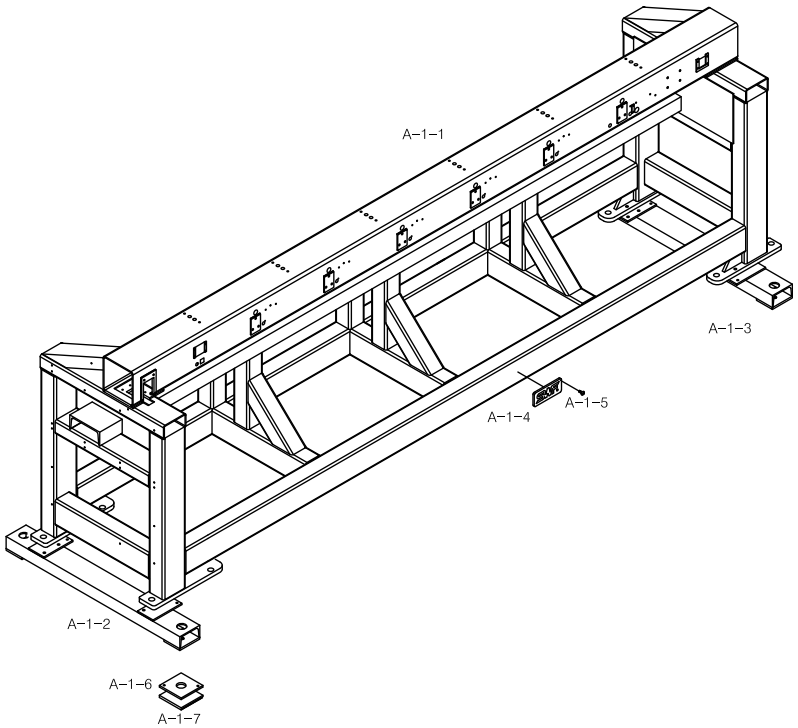

Note

Ref.No	Part No.	Part Name	Application date	Interchangeability	Hardware	Q'ty	Remarks
A-1-1	GP-028944-00	BEAM & BODY	Apr,16,07 ~	X		1	
	GP-028944-01		Apr,23,07 ~	△			
	GP-028944-02		May,17,07 ~	△			
	GP-028944-03		May,31,07 ~	△			
	GP-028944-04		Aug,30,07 ~	△			
	GP-028944-05		Nov,09,07 ~	△			
	GP-028944-06		Feb,02,08 ~	△			
	GP-028944-07		Apr,29,09 ~	△			
	GP-028944-08		Apr,20,11 ~	△			
	GP-028944-09		Jul,06,11 ~	△			
	GP-028944-10		Sep,01,11 ~	△			
	GP-028944-11		Oct,08,11 ~	△			
A-1-2	GP-029116-00	SUPPORT FOR BODY "A"				1	
A-1-3	GP-029159-00	SUPPORT FOR BODY "B"				1	
A-1-4	02101ET-UK01	Brand Mark				1	
A-1-5	02044SC-3123	Truss Screw (M5*L8)			O	61	
A-1-6	GP-010074-00	LEVELING BASE ASS'Y				4	
A-1-7	01003RB-UK01	Rubber				4	

A

A-2

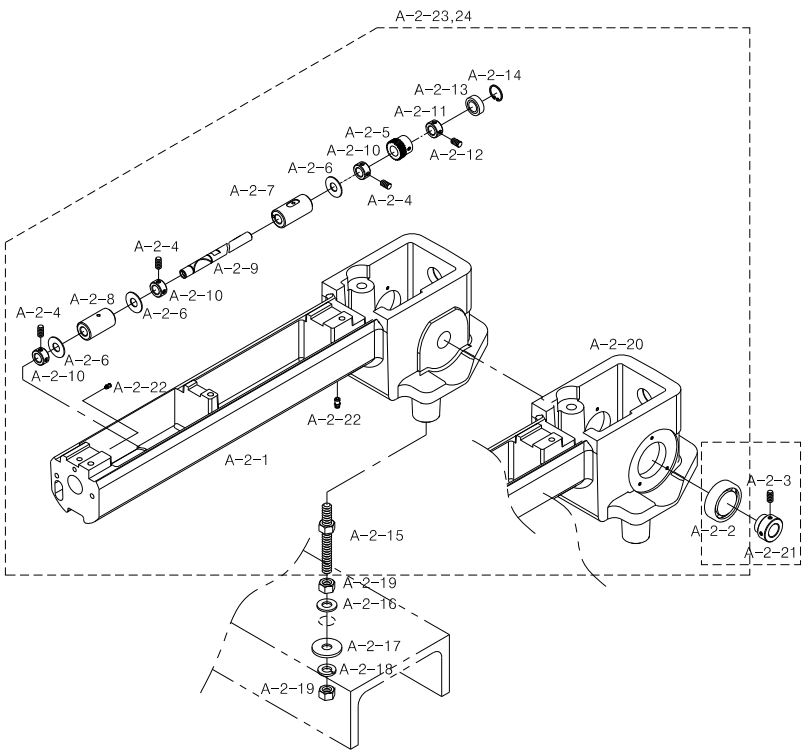

Note

Ref.No	Part No.	Part Name	Application date	Interchangeability	Hardware	Q'ty	Remarks
A-2-1	GP-028811-00	Bed	Apr,10,07 ~ Apr,23,07	X		5	
	GP-028811-01		Apr,24,07 ~ May,06,07	△			
	GP-028811-02		May,07,07 ~ Jun,04,07	△			
	GP-028811-03		Jun,04,07 ~ Jul,17,07	△			
	GP-028811-04		Jul,18,07 ~ Nov,07,08	△			
	GP-028811-05		Nov,08,08 ~ Dec,10,10	△			
	GP-028811-06		Dec,10,10 ~	△			
A-2-2	04026BR-A001	Ball Bearing 6003Z				4	
A-2-3	04016AF-A001	Cam Collar Screw				8	
A-2-4	04014SC-4517	Hook Shaft Collar Screw (M5*L5)			O	36	
A-2-5	GP-022662-00	Hook Shaft Gear	Oct,27,06 ~ Feb,25,07	X		6	
	GP-022662-01		Feb,26,07 ~ Mar,26,07	X			
	GP-022662-02		Mar,27,07 ~ Aug,09,07	X			
	GP-022662-03		Aug,10,07 ~ Oct,25,07	X			
	GP-022662-04		Oct,26,07 ~ Nov,09,08	X			
	GP-022662-05		Nov,10,08 ~	X			
A-2-6	WS-000298-00	Hook Shaft Bearing Washer				12	
A-2-7	GP-028995-00	Hook Shaft Rear Bushing	Apr,16,07 ~ May,30,07	X		6	
	GP-028995-01		May,31,07 ~	△		6	
A-2-8	BS-000096-00	Hook Shaft Front Bushing				6	
A-2-9	GP-028993-00	Hook Shaft				6	
A-2-10	CL-000169-00	Hook Shaft Collar "A"				36	
A-2-11	CL-000170-00	Hook Shaft Collar "B"				6	
A-2-12	03004SC-4517	Hook Shaft Collar Screw (15/64" n=28)				12	
A-2-13	BR-000089-00	Bearing 629ZZ	Oct,27,05 ~ Aug,10,07	X		6	
	BR-000089-01		Aug,11,07 ~	△		6	
A-2-14	RI-000110-00	Snap Ring				6	
A-2-15	04028SC-UK01	STUD BOLT (M10*P1.25*L69)				12	
A-2-16	04013PR-B001	WASHER (3.2T,@10)				4	
A-2-17	04014PR-B001	WASHER (2T,@10)				4	
A-2-18	01008SW-9115	SPRING WASHER(@10)			O	4	
A-2-19	04032SN-UK01	HEX. NUT (M10*P1.25)			O	8	
A-2-20	GP-029352-00	First Bed	Apr,24,07 ~ May,06,07	X		1	
	GP-029352-01		May,07,07 ~ Jul,17,07	△			
	GP-029352-02		Jul,18,07 ~ Dec,10,10	△			
	GP-029352-03		Dec,10,10 ~	△			
A-2-21	01102000B000	Bearing Collar				7	
A-2-22	01301600H000	Hook Oil Supply Nipple				2	
A-2-23	AS-006608-00	Bed Assy	Apr,10,07 ~	X		4	
	AS-006608-01		Nov,20,08 ~	△			
A-2-24	AS-006816-00	First Bed Assy	May,16,07 ~	X		1	
	AS-006816-01		Nov,20,08 ~	△			

A

B

SWF

Arm 1

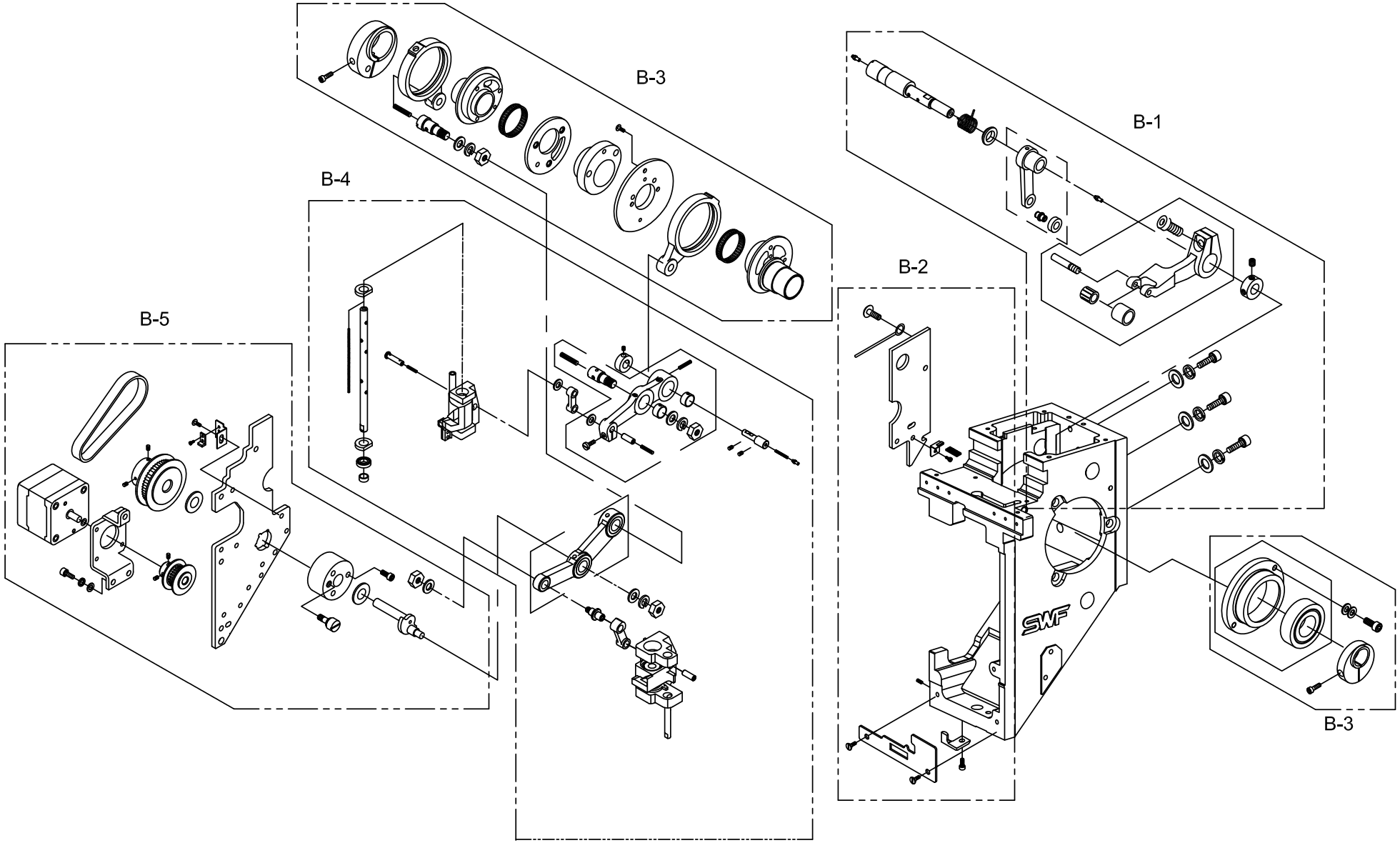

B-1

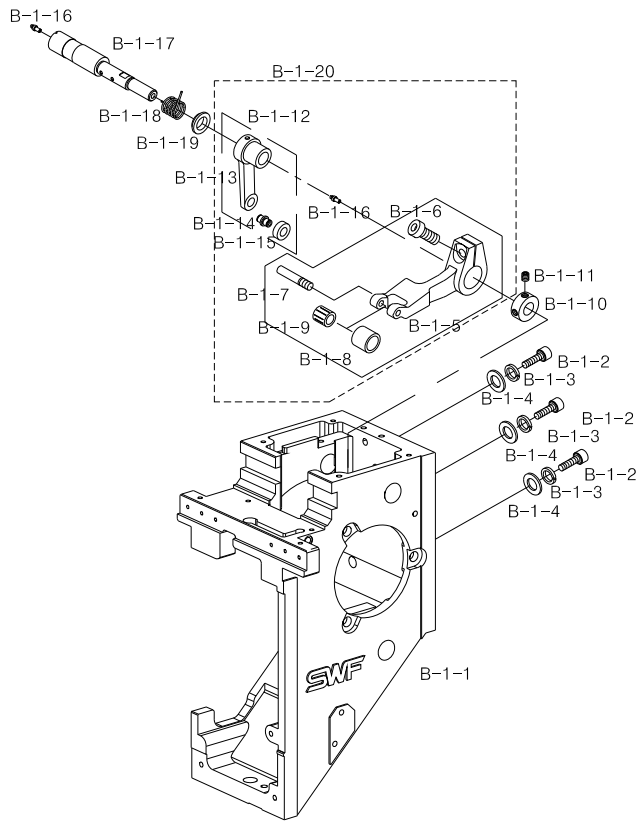

Note

Ref.No	Part No.	Part Name	Application date	Interchangeability	Hardware	Q'ty	Remarks
B-1-1	GP-024834-00	ARM	Dec,23,06 ~ Jan,18,07	X		6	
	GP-024834-01		Jan,19,07 ~ Apr,23,07	△			
	GP-024834-02		Apr,24,07 ~ Jul,18,07	△			
	GP-024834-03		Jul,19,07 ~ Jul,23,07	△			
	GP-024834-04		Jul,24,07 ~ Sep,22,08	△			
	GP-024834-05		Sep,23,08 ~ Nov,06,08	△			
	GP-024834-06		Nov,07,08 ~ Jan,13,09	△			
	GP-024834-07		Jan,13,09 ~ Jan,30,09	△			
	GP-024834-08		Jan,30,09 ~ Dec,17,10	△			
	GP-024834-09		Dec,17,10 ~	△			
B-1-2	03003SC-4113	Hex. Socket Bolt				18	
B-1-3	15095SW-3115	Spring Washer (@8)			O	18	
B-1-4	04029SW-A001	Stud Bolt Washer(S) (@8)			O	18	
B-1-5	GP-024830-00	Take-Up Driving Lever "B"	Dec,22,06 ~	X		6	
	GP-024830-01		Jan,15,07 ~	△			
	GP-024830-02		Dec,18,08 ~	△			
B-1-6	07016SC-7113	Hex.Socket Bolt(M4*L12)			O	6	
B-1-7	04019CW-T121	Pin Stud Screw				6	
B-1-8	04020AF-T121	Roller for Take-Up Lever B				6	
B-1-9	04021BR-T121	Needle Bearing (KT367N IKO)				6	
B-1-10	03302100A000	Pin Collar				6	
B-1-11	03022SC-4517	Hex.Socket Set Screw(M4*L5)			O	12	
B-1-12	AS-003443-00	Take-Up Driving Lever "A" Ass'y				6	
B-1-13	GP-024829-00	Take-up Driving Lever	Dec,22,06 ~ Jan,16,07	X		6	
	GP-024829-01		Jan,17,07 ~	△		6	
B-1-14	PN-000387-00	Take-up Driving Lever Bearing Hinge Pin				6	
B-1-15	BR-000151-00	Take-up Driving Lever Bearing				6	
B-1-16	03000500U000	Hook Oil Supply Nipple				12	
B-1-17	PN-000402-00	Take-up Driving Lever Pin	Jan,19,07 ~ Mar,25,07	X		6	
	PN-000402-01		Mar,26,07 ~ Apr,23,07	△			
	PN-000402-02		Apr,24,07 ~ Mar,17,08	△			
	PN-000402-03		Mar,18,08 ~	△			
B-1-18	GP-024831-00	Take-up Driving Lever Return Spring	Dec,22,06 ~ Jan,17,07	X		6	
	GP-024831-01		Jan,18,07 ~ Mar,20,07	△			
	GP-024831-02		Mar,21,07 ~ Apr,17,07	△			
	GP-024831-03		Apr,18,07 ~ Apr,23,07	△			
	GP-024831-04		Apr,24,07 ~ Mar,16,08	△			
	GP-024831-05		Mar,17,08 ~	△			
B-1-19	GP-037612-00	Take-up Lever Return Spring Bush	Mar,17,08 ~ Sep,17,08	X		6	
	GP-037612-01		Sep,18,08 ~	△			
B-1-20	038A0000DM00	Take-up Driving Lever A,B Assy				6	

B-2

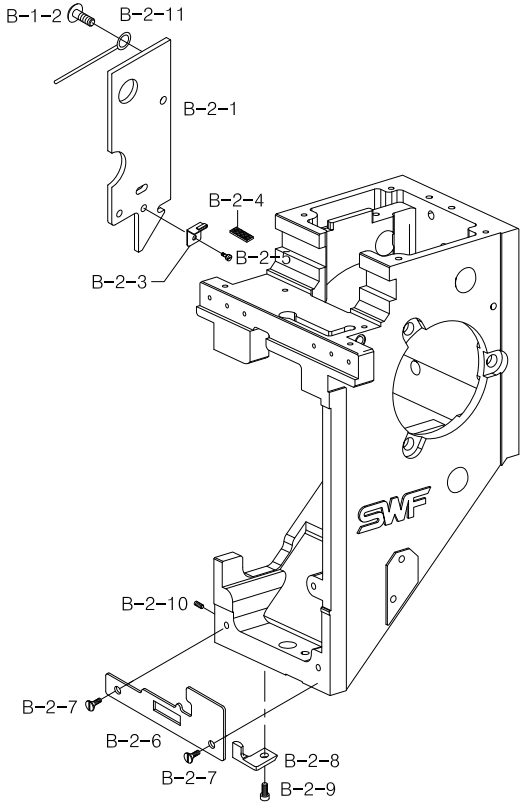

Note

Ref.No	Part No.	Part Name	Application date	Interchangeability	Hardware	Q'ty	Remarks
B-2-1	GP-023975-00	ARM SIDE COVER B	Dec,06,06 ~ Feb,08,07	X		6	
	GP-023975-01		Feb,09,07 ~ Jun,03,07	△			
	GP-023975-02		Jun,04,07 ~	△			
B-2-2	02010SC-A001	SCREW (9/64,N40,L8)				40	
B-2-3	GP-029526-00	Felt Holder	Apr,27,07 ~ Jun,03,07	X		6	
	GP-029526-01		Jun,04,07 ~	△			
B-2-4	GP-029527-00	Felt	Apr,27,07 ~ Jun,03,07	X		6	
	GP-029527-01		Jun,04,07 ~ Aug,12,07	△			
	GP-029527-02		Aug,13,07 ~	△			
B-2-5	02015SC-7113	Screw(M4*L10)			O	12	
B-2-6	GP-011936-00	Arm Bearing Guide Plate	Sep,14,05 ~ Jan,29,07	X		6	
	GP-011936-01		Jan,30,07 ~	△			
B-2-7	05062SC-A001	Bolt (9/64" n=40)				12	
B-2-8	03056CL-B001	Head Rail Holder				6	
B-2-9	03057SC-A001	Head Rail Holder Screw				6	
B-2-10	03020SC-A001	Drive Pin Screw 11/64,N40,L8				6	
B-2-11	03062ET-A001	Cable Fastener				40	

B

B-3

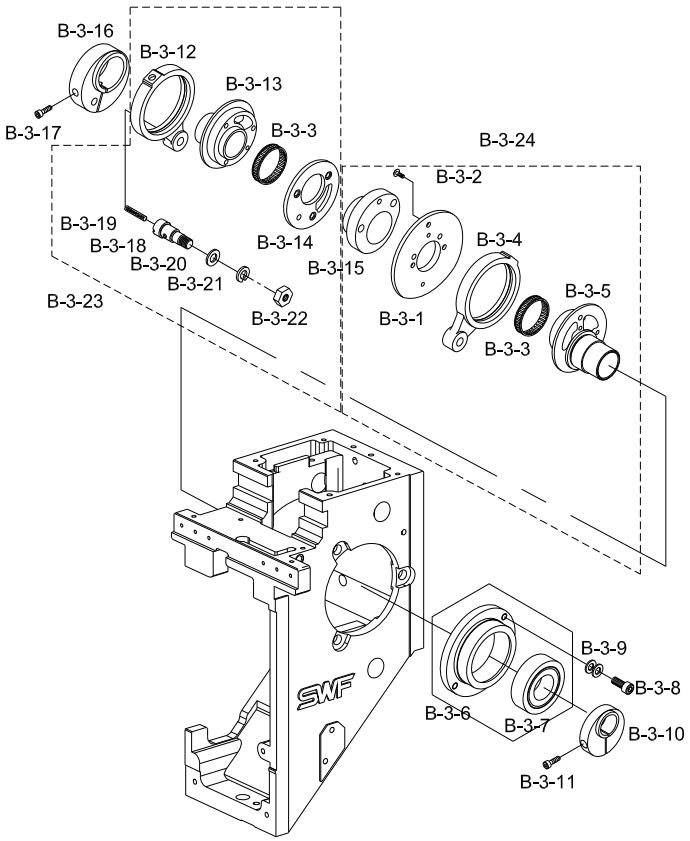

Note

Ref.No	Part No.	Part Name	Application date	Interchangeability	Hardware	Q'ty	Remarks
B-3-1	GP-024841-00	CAM BASE	Dec,23,06 ~ Feb,25,07	X		6	
	GP-024841-01		Feb,26,07 ~ Jun,30,08	△			
	GP-024841-02		Jun,31,08 ~	△			
B-3-2	03007SC-A001	Cam Base Screw				18	
B-3-3	03302900H000	NEEDLE CASE (KT-42469)				6	
B-3-4	03303000H000	Connecting Rod				6	
B-3-5	GP-011932-00	NEEDLE BAR DRIVING CAM	Sep.14.05 ~		X	6	
	GP-011932-01	NEEDLE BAR DRIVING CAM	Jan.01.13 ~		△		
B-3-6	GP-011933-00	Bearing Case A @20	Sep,14,05 ~ Dec,15,08	X		6	
	GP-011933-01		Dec,16,08 ~	△			
B-3-7	01001100H000	Ball Bearing (6005Zz)				6	
B-3-8	02031SC-7113	Hex. Socket Screw(M5*L10)			O	6	
B-3-9	02030SW-B001	Washer (5@)			O	36	
B-3-10	CL-000159-00	Cam Tightening Collar (@20)	Jan,16,07 ~ May,01,07	X		6	
	CL-000159-01		May,02,07 ~ Aug,23,07	△			
	CL-000159-02		Aug,24,07 ~ Aug,27,07	△			
	CL-000159-03		Aug,28,07 ~ Dec,17,08	△			
	CL-000159-04		Dec,18,08 ~	△			
B-3-11	03016SC-4113	Hex. Socket Bolt (M5*L15)			O	6	
B-3-12	GP-023963-00	Presser Driving Connecting	Dec.06.06 ~	X		6	
	GP-023963-01	Presser Driving Connecting	May.22.07 ~	△			
	GP-023963-02	Presser Driving Connecting	Jan,13,09 ~	△			
B-3-13	GP-023962-00	Presser Foot Driving Cam	Dec,06,06 ~ Feb,27,07	X		6	
	GP-023962-01		Feb,28,07 ~ Jun,30,08	X			
	GP-023962-02		Aug,01,08 ~	X			
B-3-14	GP-024025-00	Presser Driving Cam Cover	Dec,07,06 ~ Mar,22,07	X		6	
	GP-024025-01		Mar,23,07 ~ Jun,30,08	△			
	GP-024025-02		Jun,31,08 ~	△			
B-3-15	GP-024833-00	Take-up Driving Cam	Dec,23,06 ~ Feb,25,07	X		6	
	GP-024833-01		Feb,26,07 ~ May,10,07	△			
	GP-024833-02		May,11,07 ~ Jun,25,08	△			
	GP-024833-03		Jun,26,08 ~	△			
	GP-024833-04		Jan,13,09 ~	△			
	GP-024833-05		Oct,19,09 ~	△			
B-3-16	CL-000147-00	Presser Foot Driving Cam Collar	Dec,15,06 ~ Mar,22,07	X		6	
	CL-000147-01		Mar,23,07 ~ May,10,07	X			
	CL-000147-02		May,11,07 ~ Jun,25,08	X			
	CL-000147-03		Jun,26,08 ~	X			
B-3-17	08113SC-A001	COLLAR SCREW 11/64,N=40,L6				6	
B-3-18	PN-000455-00	Connecting Rod Stud	Apr,27,07 ~ May,21,07	X		6	
	PN-000455-01		May,22,07 ~	△			
B-3-19	32003ET-T121	Wick				6	
B-3-20	03025SW-1211	Washer (@6)			O	6	
B-3-21	03026SW-9115	Spring Washer (@6)			O	6	
B-3-22	03027SN-A001	Stud Nut			O	6	

B-3

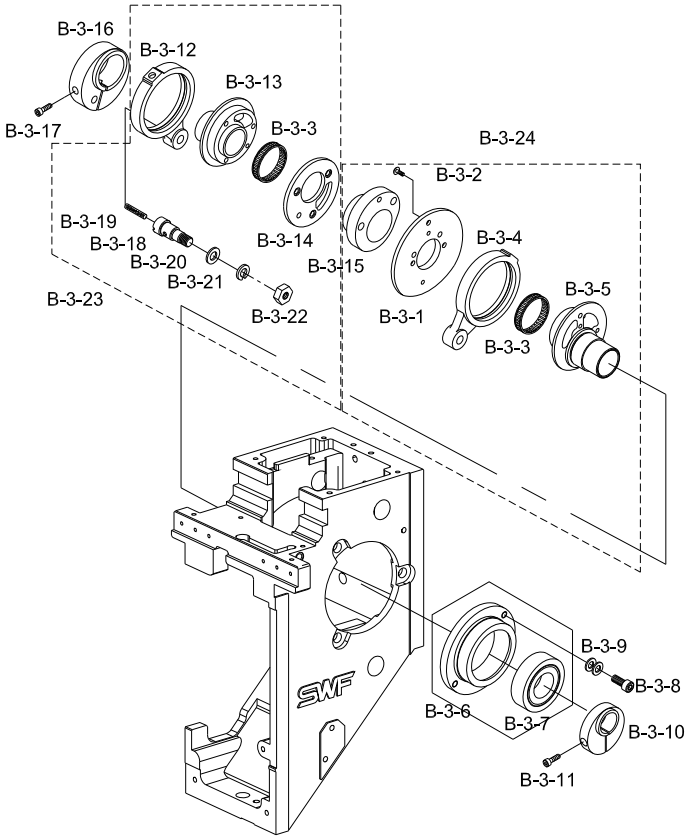

Note

Ref.No	Part No.	Part Name	Application date	Interchangeability	Hardware	Q'ty	Remarks
B-3-23	AS-008053-00	Presser Foot Driving Cam Assy	Jan,08,08 ~	X		6	
B-3-24	AS-008052-00	NEEDLE BAR DRIVING CAM Assy	Jan,08,08 ~	X		6	

B

B-4

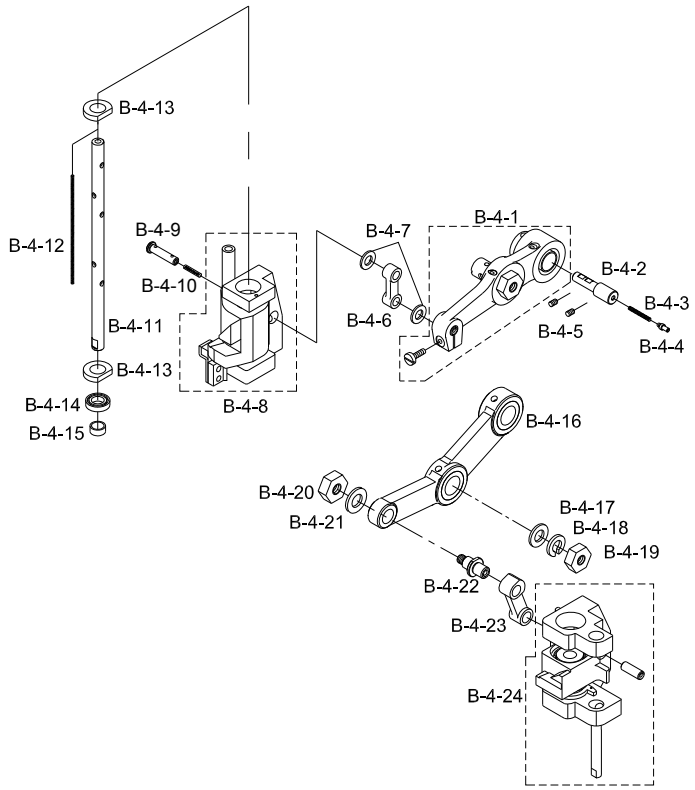

Note

Ref.No	Part No.	Part Name	Application date	Interchangeability	Hardware	Q'ty	Remarks
B-4-1	AS-003446-00	NEEDLE BAR DRIVE LEVER Ass'y	Sep,14,05 ~ Nov,12,06	X		6	
	AS-003446-01		Nov,13,06 ~ Oct,22,07	△			
	AS-003446-02		Oct,23,07 ~	△			
B-4-2	PN-000371-00	NEEDLE BAR DRIVE PIN	Dec,08,6 ~	X		6	
	PN-000371-01		Jan,18,07 ~	△			
	PN-000371-02		Mar,31,07 ~	△			
	PN-000371-03		Dec,23,08 ~	△			
B-4-3	32003ET-T121	Wick				6	
B-4-4	03000500U000	Hook Oil Supply Nipple				6	
B-4-5	03020SC-A001	Drive Pin Screw 11/64,N40,L8			O	12	
B-4-6	GP-026380-00	Needle Bar Drive Rink	Feb,04,07 ~			6	
	GP-026380-01		Jan,13,09 ~				
B-4-7	03034SW-A001	Reciprocator Washer				12	
B-4-8	AS-003447-00	Needle Bar Reciprocator A'ssy	Sep,14,05 ~			6	
B-4-9	03033CW-A001	Driver Pin				6	
B-4-10	32003ET-T121	Wick				6	
B-4-11	GP-023199-00	Needle Bar Driving Shaft	Feb.14.07 ~	X		6	
	GP-023199-01		Jan,13,09 ~	△			
B-4-12	32003ET-T121	Wick				6	
B-4-13	03042SF-T121	FELT "A"				12	
B-4-14	03008000H000	Ball Bearing 6800			O	6	
B-4-15	03008100K000	Needle Bar Drive Bearing Bush				6	
B-4-16	AS-005868-00	Presser Driving Lever A'ssy	Dec,06,06 ~			6	
	AS-005868-01		Jan,24,07 ~				
	AS-005868-02		Jun,01,07 ~				
	AS-005868-03		Jul,01,08 ~				
B-4-17	03025SW-1211	Washer (@6)			O	6	
B-4-18	03026SW-9115	Spring Washer (@6)			O	6	
B-4-19	03027SN-A001	Stud Nut			O	6	
B-4-20	03031SN-A001	Nut (11/64" n=40)			O	6	
B-4-21	18048SW-3115	Washer			O	6	
B-4-22	PN-000351-00	Presser Foot Driving Lever Pin (C)	Nov,12,06 ~ Nov,30,08	X		6	
	PN-000351-01	Presser Foot Driving Lever Pin (C)	Dec,01,08 ~	△			
B-4-23	GP-026380-00	Needle Bar Drive Rink				6	
B-4-24	AS-005870-00	Presser Foot Driving Assy	Dec,06,06 ~ Jan,28,08	X		6	
	AS-005870-01	Presser Foot Driving Assy	Jan,29,08 ~ Feb,04,08	△			
	AS-005870-02	Presser Foot Driving Assy	Feb,05,08 ~ Aug,21,08	△			
	AS-005870-03	Presser Foot Driving Assy	Aug,22,08 ~	△			

B-5

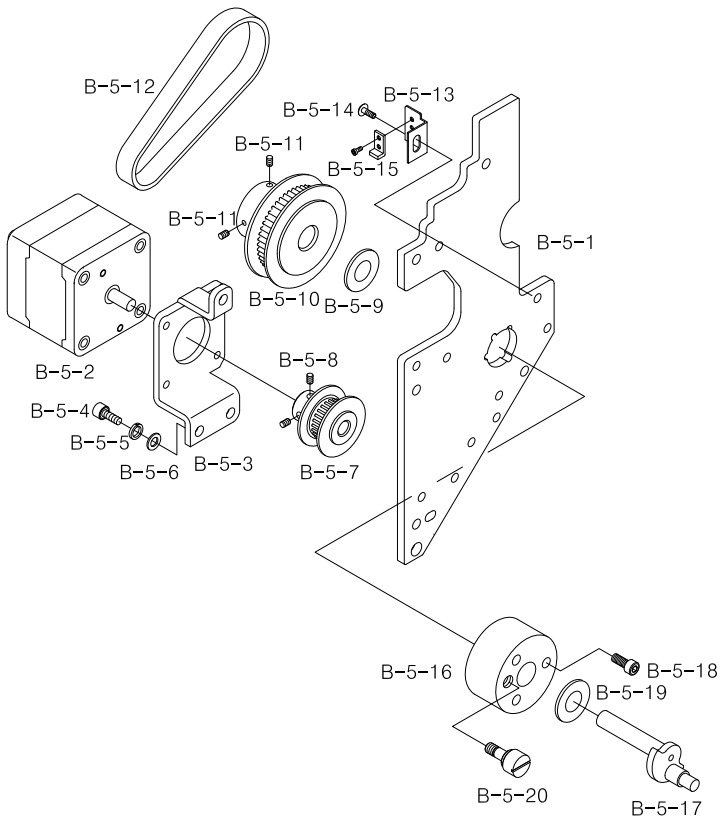

Note

Ref.No	Part No.	Part Name	Application date	Interchangeability	Hardware	Q'ty	Remarks
B-5-1	GP-020673-00	ARM SIDE COVER A	Aug,21,06 ~ Oct,23,06	X		6	
	GP-020673-01		Oct,24,06 ~ Jan,28,07	△			
	GP-020673-02		Jan,29,07 ~ Dec,17,07	△			
	GP-020673-03		Dec,18,07 ~	△			
B-5-2	08500200C000	Presser Foot Driving Motor				6	
B-5-3	GP-023969-00	Presser Foot Driving Motor Bracket	Dec,06,06 ~ Jul,05,07	X		6	
	GP-023969-01		Jul,06,07 ~	△			
B-5-4	02015SC-4113	Hex. Socket Bolt (M4*L10)			O	18	
B-5-5	18014SW-3115	Spring Washer			O	18	
B-5-6	03030SW-1211	Washer			O	18	
B-5-7	GP-024218-00	Presser Foot Driving Pin Pulley	Dec,11,06 ~ May,07,07			6	
	GP-024218-01		May,08,07 ~				
B-5-8	03050SC-4517	Set Screw (M3*L3)			O	12	
B-5-9	WS-000271-00	Presser Foot Driving Pin Washer				6	
B-5-10	GP-024219-00	Presser Foot Driving Pin Pulley	Dec,11,06 ~ Jan,15,07	X		6	
	GP-024219-01		Jan,16,07 ~ Feb,20,07	△			
	GP-024219-02		Feb,21,07 ~ Jun,11,07	△			
	GP-024219-03		Jun,12,07 ~ Jun,26,07	△			
	GP-024219-04		Jun,27,07 ~ Dec,25,07	△			
	GP-024219-05		Dec,26,07 ~	△			
B-5-11	07009AF-4517	Set Screw (M5*L6)			O	12	
B-5-12	BE-000097-00	Presser Foot Driving Belt				6	
B-5-13	GP-025609-00	Presser Foot Driving Pin Sensor Bracket	Jan,16,07 ~ Feb,06,07	X		6	
	GP-025609-01		Feb,07,07 ~ Nov,26,07	△			
	GP-025609-02		Nov,27,07 ~ Nov,28,07	△			
	GP-025609-03		Nov,29,07 ~ Jan,27,08	△			
	GP-025609-04		Jan,28,08 ~	△			
B-5-14	02010AF-3123	Truss Bolt (M4*L8)			O	6	
B-5-15	BD-000534-00	Presser Foot Driving Pin Sensor				6	
B-5-16	CL-000145-00	Presser Foot Driving Pin Collar	Dec,06,06 ~ Jan,14,07	X		6	
	CL-000145-01		Jan,15,07 ~	△			
B-5-17	PN-000368-07	Presser Foot Driving Pin				6	
B-5-18	07016SC-4113	Bolt (M4*L12)			O	18	
B-5-19	WS-000271-00	Presser Foot Driving Pin Washer				6	
B-5-20	PN-000405-00	Presser Foot Driving Pin Stopper Bolt	Jan,22,07 ~ Feb,03,07	X		6	
	PN-000405-01		Feb,04,07 ~ Apr,04,07	△			
	PN-000405-02		Apr,05,07 ~	△			
B-5-21	AS-006112-00	ARM SIDE COVER Assy	Jan,17,07 ~	X		6	
	AS-006112-01		May,22,07 ~	△			

B

Arm 2

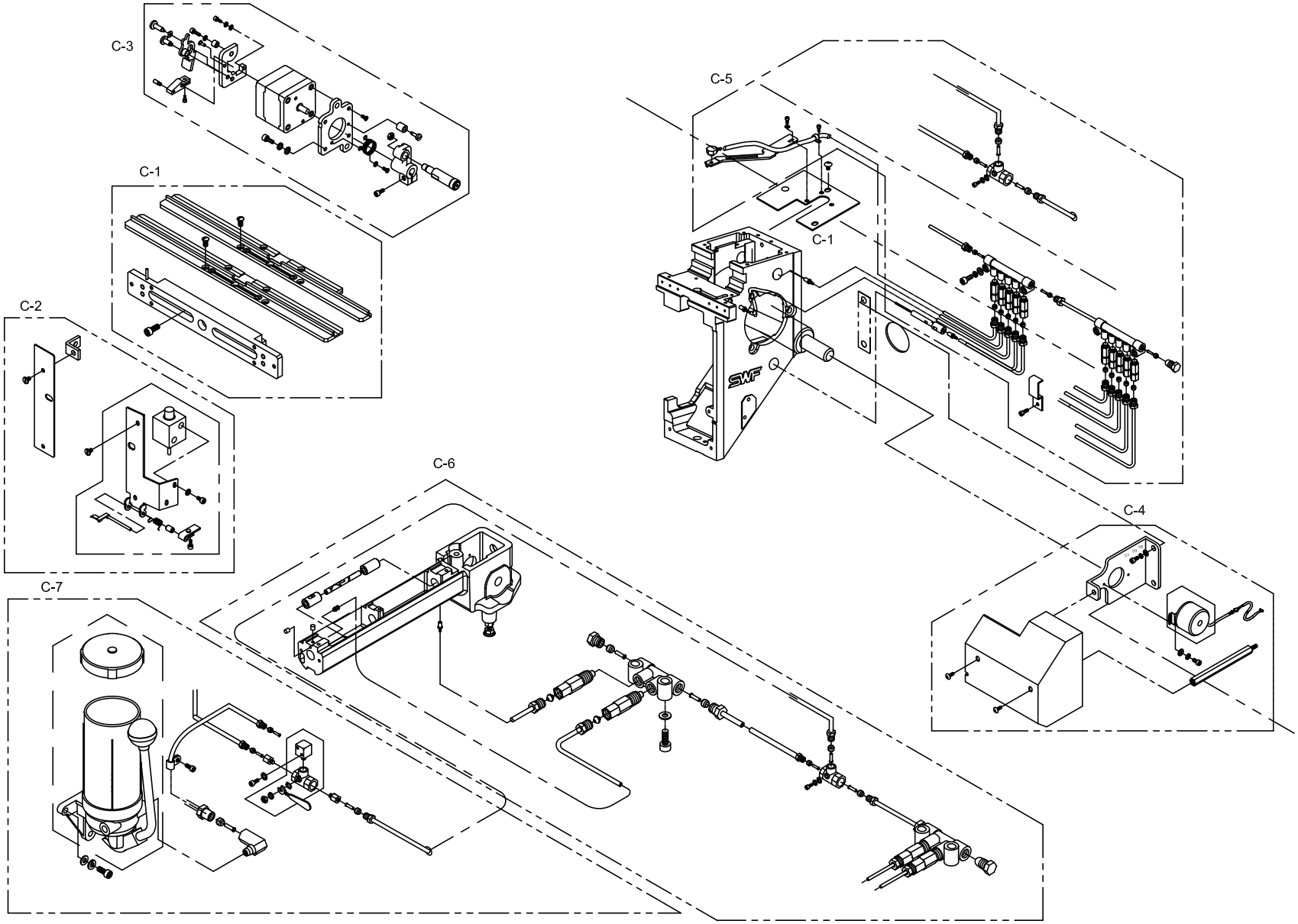

C-1

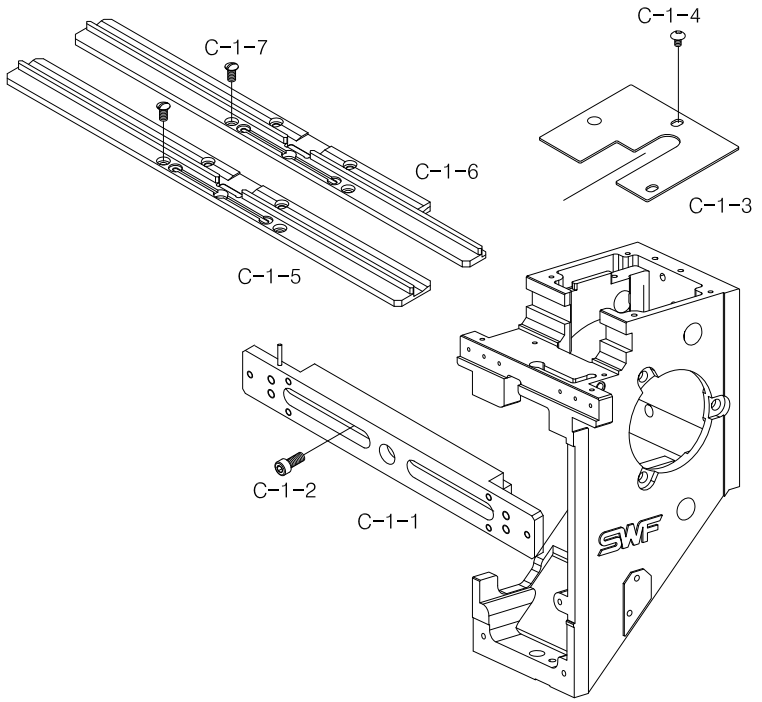

Note

Ref.No	Part No.	Part Name	Application date	Interchangeability	Hardware	Q'ty	Remarks
C-1-1	03069LM-B002	Lm Guide Block Set				6	
C-1-2	03071SC-A001	Hex.Scoket Bolt (M3*L15)			O	12	
C-1-3	GP-025661-00	ARM TOP COVER	Jan,18,07 ~ Feb,02,22	X		6	
	GP-025661-01		Feb,03,22 ~ Aug,09,07	△			
	GP-025661-02		Aug,10,07 ~ Dec,20,07	△			
	GP-025661-03		Dec,21,07 ~ Jan,30,09	△			
	GP-025661-04		Jan,30,09 ~	△			
C-1-4	15042SC-3123	Truss Screw (M4*L6)			O	12	
C-1-5	07026AD-A002	Take-Up Guide Rail L=250				5	
C-1-6	03300613H000	Take-Up Guide Rail L=250				1	
C-1-7	05041SC-A001	Guide Rail Screw				24	

C

C-2

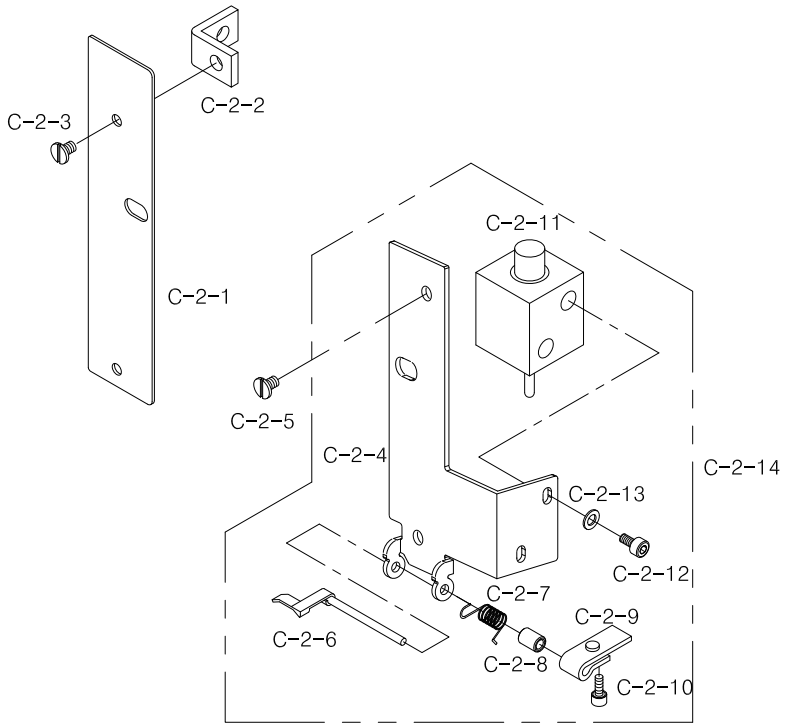

Note

Ref.No	Part No.	Part Name	Application date	Interchangeability	Hardware	Q'ty	Remarks
C-2-1	GP-024688-00	Arm Guard Plate(L)	Dec,19,06 ~ Aug,28,07			6	
	GP-024688-01		Aug,29,07 ~ Feb,20,08				
	GP-024688-02		Feb,21,08 ~				
C-2-2	03008300I000	Arm Guard Plate(L) Bracket				12	
C-2-3	02009SC-A001	Side Cover Screw				6	
C-2-4	GP-025610-00	Arm Guard Plate(R)				6	
C-2-5	03065SC-A001	Guard Plate Screw				6	
C-2-6	AS-006107-00	Thread Holding Lever Ass'y				6	
C-2-7	03304200I000	Lever Spring				6	
C-2-8	03304300I000	Lever Spring Bush.				6	
C-2-9	03304400I000	Thread Holding Push Plate				6	
C-2-10	07035SC-7113	Hex.Scoket Bolt (M3*L6)			O	6	
C-2-11	10009EL-A002	UPPER THREAD CATCHER SOL.				6	
C-2-12	05007SC-7113	Hex.Scoket Bolt (M3*L5)			O	12	
C-2-13	06011SW-2111	Washer (@3)			O	12	
C-2-14	AS-006566-00	UPPER THREAD HOLDING SET				6	

C-3

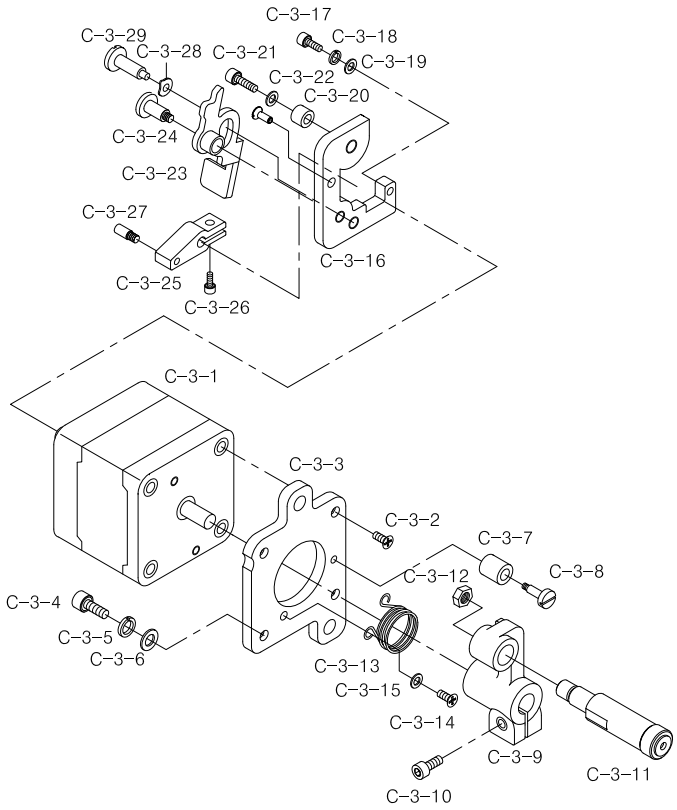

Note

Ref.No	Part No.	Part Name	Application date	Interchangeability	Hardware	Q'ty	Remarks
C-3-1	03410200H000	Jump Motor				6	
C-3-2	02002SC-7119	Plus Screw (M4*L8)			O	12	
C-3-3	GP-024427-00	Jump Motor Base	Dec,15,06 ~ Jan,28,07	X		6	
	GP-024427-01		Jan,29,07 ~	△			
C-3-4	07016SC-7113	Hex.Scoket Bolt (M4*L10)			O	6	
C-3-5	18014SW-3115	Spring Washer (@4)			O	6	
C-3-6	06003SW-2111	Washer (@4)			O	12	
C-3-7	03410300H000	Jump Crank Stopper				12	
C-3-8	03411400H000	Stud for Jump Crank Stopper				6	
C-3-9	GP-008769-00	Jump Driving Crank	Apr,22,05 ~ Jun,06,05	X		6	
	GP-008769-01		Jun,07,05 ~	△			
C-3-10	05028SC-4113	HOLDER SCREW (9/64-L8)			O	6	
C-3-11	AS-003449 00	Jump Crank Roller Ass'y				6	
C-3-12	03031SN-A001	Pin. Nut (11/64,N=40)			O	6	
C-3-13	03410800I000	Jump Return Spring				6	
C-3-14	08006SC-8118	Plus Screw (M3*L5)			O	6	
C-3-15	06011SW-2111	Washer (@3)			O	6	
C-3-16	03411100I000	Jump Clutch Base				6	
C-3-17	22006SC-7113	Hex.Scoket Bolt (M3*L8)			O	6	
C-3-18	11019SW-9115	Spring Washer (3@)			O	6	
C-3-19	06011SW-2111	Washer (@3)			O	6	
C-3-20	03304900H000	Jump Clutch Lever Stopper				6	
C-3-21	04010MC-7113	Hex.Scoket Bolt (M4*L10)			O	6	
C-3-22	06011SW-2111	Washer (@3)			O	6	
C-3-23	03411200I000	Jump Driving Clutch Lever				6	
C-3-24	03411300H000	Stud for Jump Clutch Lever				6	
C-3-25	03410900H000	Jump Driving Clutch				6	
C-3-26	02023SC-7113	Hex. Socket Bolt (M4*L8)			O	6	
C-3-27	03411000H000	Jump Clutch Pin				6	
C-3-28	03411900H000	Jump Clutch Plate Spring				6	
C-3-29	03411300H000	Jump Clutch Lever Stud Bolt				6	
C-3-30	AS-006113-00	Jump Assy	Jan,17,07 ~	X		6	
	AS-006113-01		Jun,01,09 ~	△			
	AS-006113-02		Jun,01,09 ~	△			
	AS-006113-03		Jun,01,09 ~	△			

C

C-4

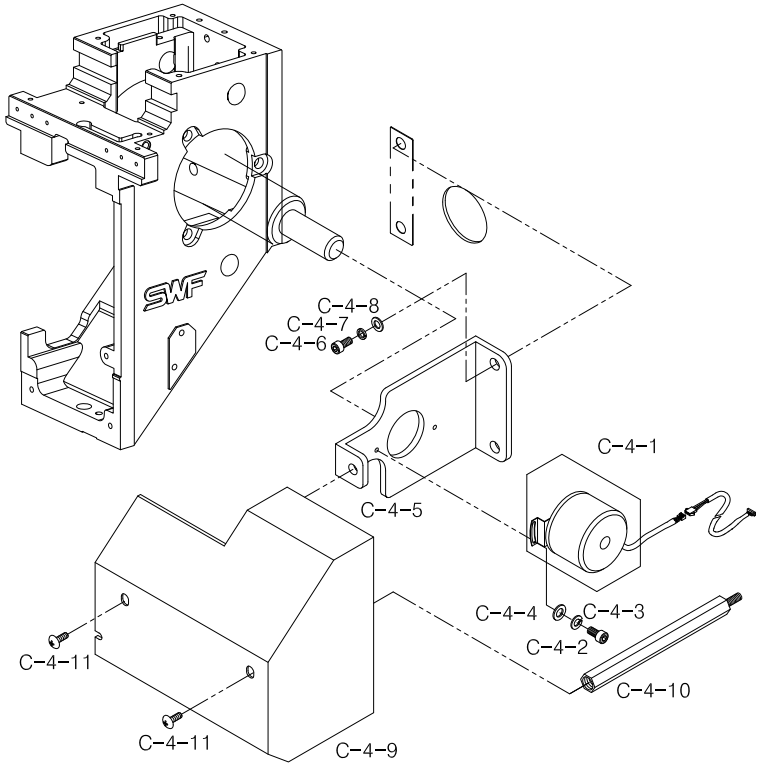

Note

Ref.No	Part No.	Part Name	Application date	Interchangeability	Hardware	Q'ty	Remarks
C-4-1	03013EL-T121	Encoder Set				1	
C-4-2	07035SC-7113	Bracket Screw (M3*L6)			O	2	
C-4-3	08011SW-1111	Spring Washer (@3-S)			O	2	
C-4-4	06011SW-2111	Washer (@3)			O	2	
C-4-5	GP-008536-00	Encoder Base				1	
C-4-6	08076SC-7113	Hex. Socket Bolt (M5*L12)			O	4	
C-4-7	18048SW-3115	Spring Washer (@5)			O	2	
C-4-8	16018SW-1111	Washer (@5)			O	2	
C-4-9	GP-026153-00	Oil Tank Cover				1	
C-4-10	18036CW-UK06	Oil Tank Cover Support			O	1	
C-4-11	02044SC-3123	Truss Screw (M5*L8)				2	

C

C-5

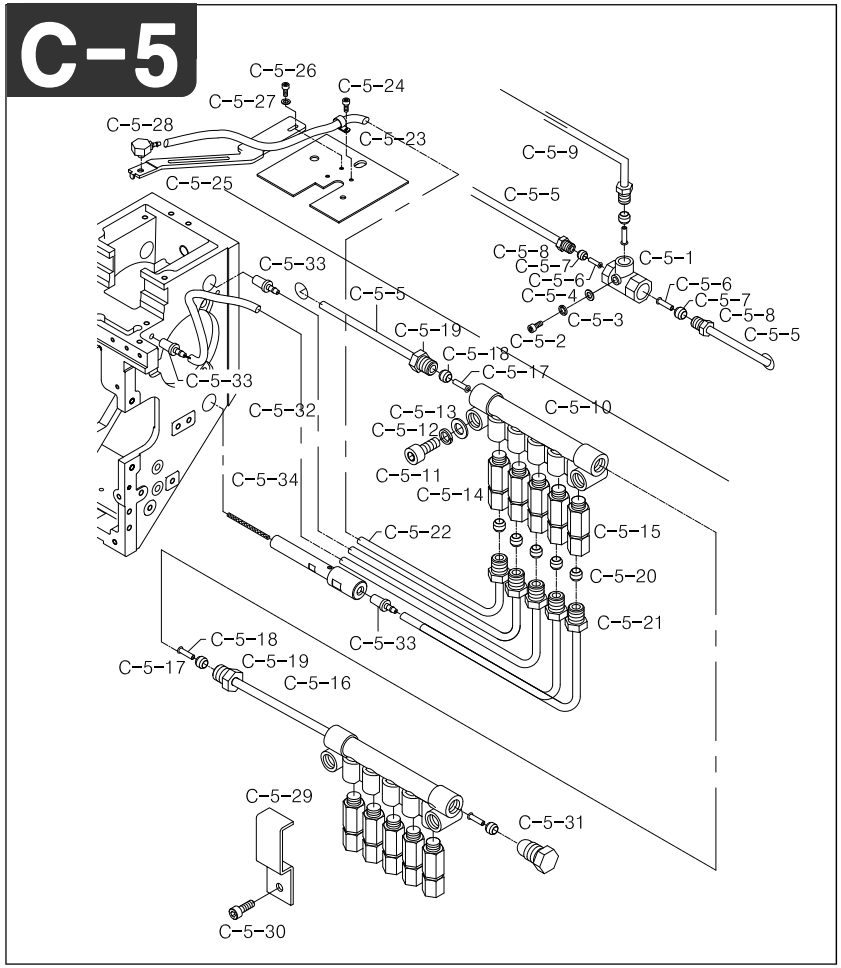

Note

Ref.No	Part No.	Part Name	Application date	Interchangeability	Hardware	Q'ty	Remarks
C-5-1	01303900H000	Oil Distribution Junction				2	
C-5-2	14046SC-7113	Hex.Socket Bolt (M6*L30)			O	1	
C-5-3	03026SW-9115	Spring Washer (@6)			O	1	
C-5-4	03025SW-1211	Washer (@6)			O	1	
C-5-5	01303800H000	Hose				2	
C-5-6	01300300H000	Oil Pump Hose Insert				3	
C-5-7	01300400H000	Oil Pump Compression Sleeve				3	
C-5-8	01300500H000	Oil Pump Compression Bushing				3	
C-5-9	01302400H000	Stop Valve Adapter Hose (@4)				1	
C-5-10	01302700U000	Mos Metering Valve Junction				20	
C-5-11	14046SC-7113	Hex.Socket Bolt (M6*L30)			O	40	
C-5-12	03026SW-9115	Spring Washer (@6)			O	3	
C-5-13	03025SW-1211	Washer (@6)			O	40	
C-5-14	01300900H000	Mos Metering Valve				20	
C-5-15	01302000H000	Mos Metering Valve (Mos-1)				120	
C-5-16	01302800HD00	Mos Valve Junction Hose @4				18	
C-5-17	01300300H000	Oil Pump Hose Insert				44	
C-5-18	01300400H000	Oil Pump Compression Sleeve				44	
C-5-19	01300500H000	Oil Pump Compression Bushing				44	
C-5-20	01301300H000	Bed Oil Compression Sleeve				80	
C-5-21	01301400H000	Bed Oil Compression Bushing				80	
C-5-22	01302900H000	Needle Bar Supply Hose				20	
C-5-23	01303600H000	Needle Bar Oil Hose Holder				20	
C-5-24	05007SC-7113	Hex. Socket Bolt (M3*L5)			O	20	
C-5-25	GP-029277-00	Head Oil Hose Guide	Apr,20,07 ~ Jul,23,07	X		20	
	GP-029277-01		Jul,24,07 ~ Oct,24,07	△			
	GP-029277-02		Oct,25,07 ~	△			
C-5-26	05007SC-7113	Hex. Socket Bolt (M3*L5)			O	40	
C-5-27	06011SW-2111	Washer (@3)			O	40	
C-5-28	01303110H000	Elbow Tube End (E*0.3*2.4)				20	
C-5-29	18033PR-UK01	Oil Tube Guide				20	
C-5-30	02023SC-7113	Hex. Socket Bolt (M4*L8)			O	20	
C-5-31	01301900H000	Close Plug (M8*1.0)				3	
C-5-32	01303200H000	Take-Up Lever Oil Supply Hose				20	
C-5-33	01301600H000	Hook Oil Supply Nipple				60	
C-5-34	01303300H000	Needle Bar Driving Shaft Hose				20	

C

C-6

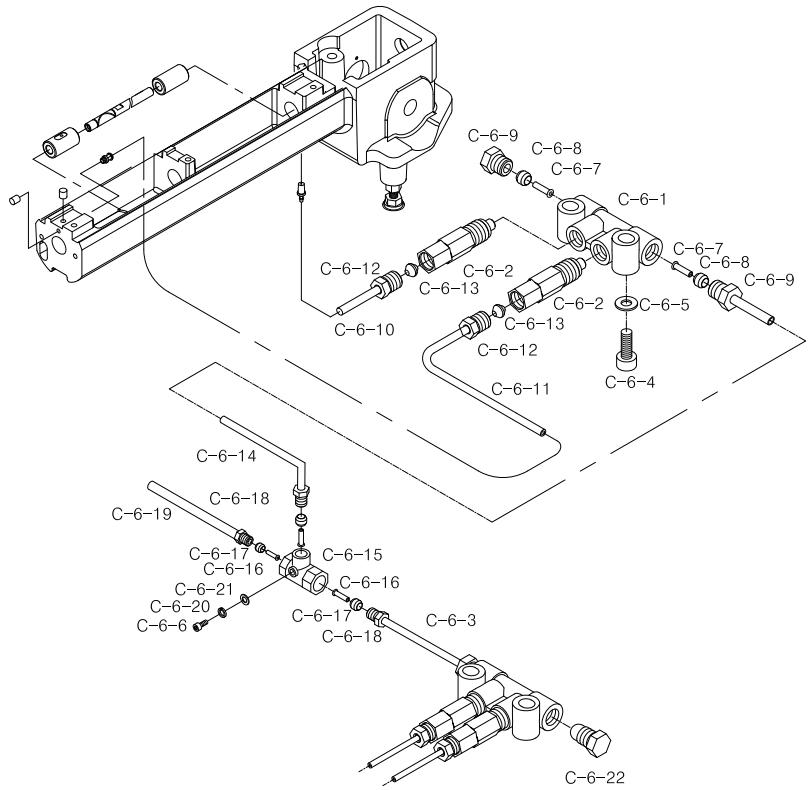

Note

Ref.No	Part No.	Part Name	Application date	Interchangeability	Hardware	Q'ty	Remarks
C-6-1	01302700H000	Mos Metering Valve Junction				40	
C-6-2	01300900H000	Mos Metering Valve				20	
C-6-3	01301000H000	Valve Junction Connect Hose				9	
C-6-4	03016SC-4113	Hex. Socket Bolt (M5*L15)			O	20	
C-6-5	18049SW-3111	Washer (@5)			O	20	
C-6-6	05045MC-7113	HEX.SOCKET BOLT (M5*L45)			O	1	
C-6-7	01300300H000	Oil Pump Hose Insert				20	
C-6-8	01300400H000	Oil Pump Compression Sleeve				20	
C-6-9	01300500H000	Oil Pump Compression Bushing				20	
C-6-10	01301100H000	Bed Oil Supply Hose "A"				40	
C-6-11	01301200H000	Bed Oil Supply Hose "B"				40	
C-6-12	01301400H000	Bed Oil Compression Bushing				20	
C-6-13	01302600H000	Stop Valve Adapter				20	
C-6-14	01302400H000	Stop Valve Adapter Hose (@4)				1	
C-6-15	01303900H000	Oil Distribution Junction				2	
C-6-16	01300300H000	Oil Pump Hose Insert				3	
C-6-17	01300400H000	Oil Pump Compression Sleeve				3	
C-6-18	01300500H000	Oil Pump Compression Bushing				3	
C-6-19	01303800H000	Hose				2	
C-6-20	18048SW-3115	SPRING WASHER (@5)			O	1	
C-6-21	16018SW-1111	WASHER (@5)			O	1	
C-6-22	01301900H000	Close Plug (M8*1.0)				3	

C

C-7

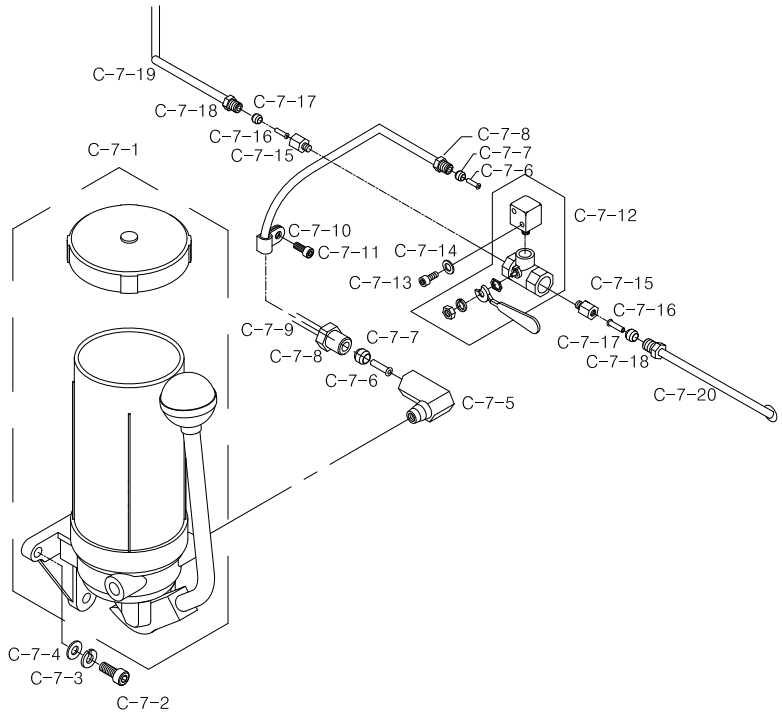

Note

Ref.No	Part No.	Part Name	Application date	Interchangeability	Hardware	Q'ty	Remarks
C-7-1	GP-050368-00	Oil Pump Set	Aug,18,10 ~			1	
C-7-2	14046SC-7113	Hex.Socket Bolt (M6*L30)			O	3	
C-7-3	03026SW-9115	Spring Washer (@6)			O	3	
C-7-4	03025SW-1211	Washer (@6)			O	3	
C-7-5	01300200H000	Oil Pump Adapter				1	
C-7-6	01300300H000	Oil Pump Hose Insert				2	
C-7-7	01300400H000	Oil Pump Compression Sleeve				2	
C-7-8	01300500H000	Oil Pump Compression Bushing				2	
C-7-9	01300600H000	Oil Pump Hose (@4)				1	
C-7-10	15046ET-T121	Wire Holder				2	
C-7-11	02023SC-7113	Hex. Socket Bolt (M4*L8)			O	2	
C-7-12	01302210H000	Stop Valve (1/8)				1	
C-7-13	05014SC-7113	Hex. Socket Bolt (M4*L25)			O	2	
C-7-14	18015SW-3111	Washer (4@)			O	2	
C-7-15	01302600H000	Stop Valve Adapter				1	
C-7-16	01300300H000	Oil Pump Hose Insert				1	
C-7-17	01300400H000	Oil Pump Compression Sleeve				1	
C-7-18	01300500H000	Oil Pump Compression Bushing				1	
C-7-19	01302400H000	Stop Valve Adapter Hose (@4)				1	
C-7-20	01303500H000	Needle Bar Pin Supply Hose				20	

C

Thread Cutting Set

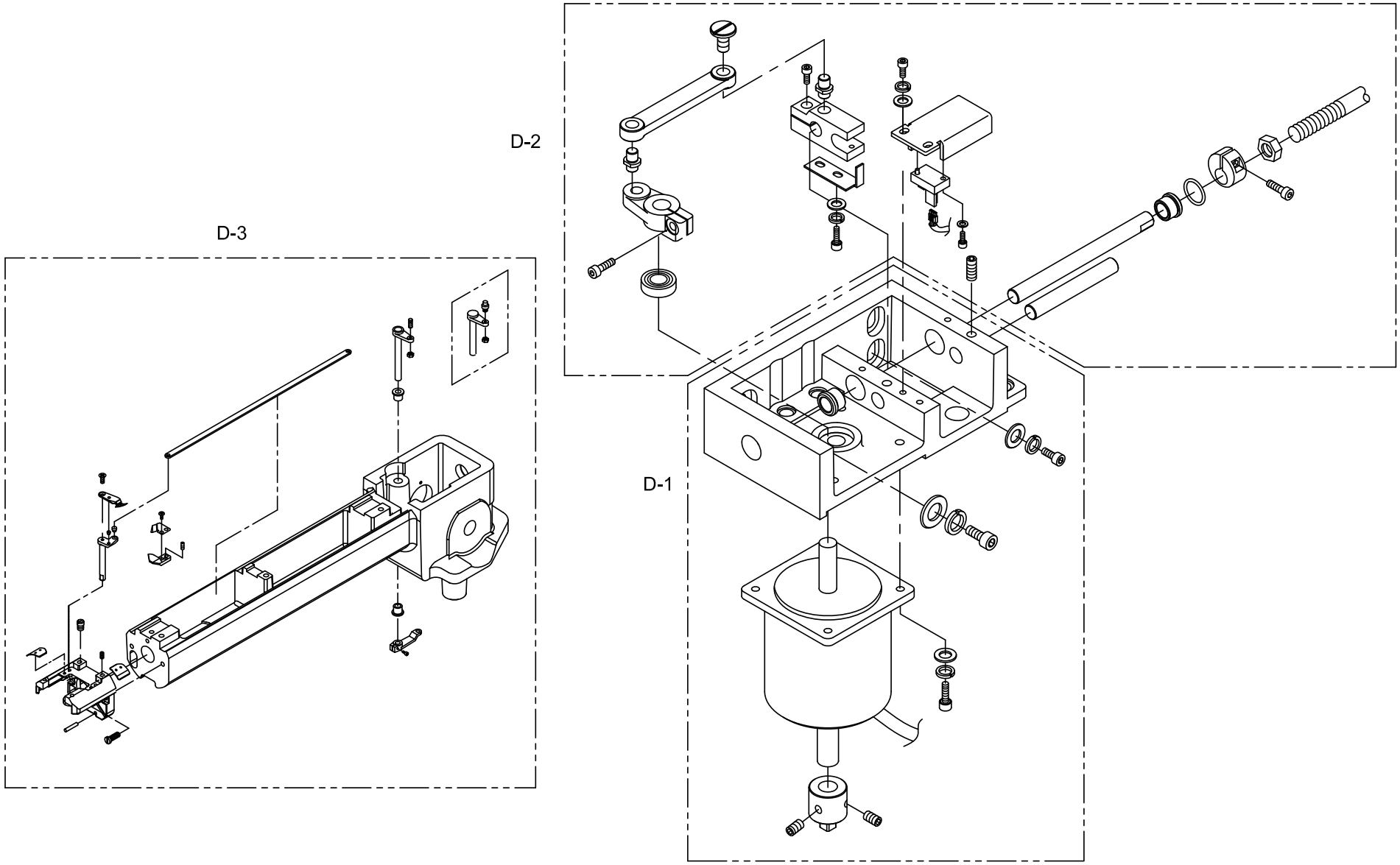

D-1

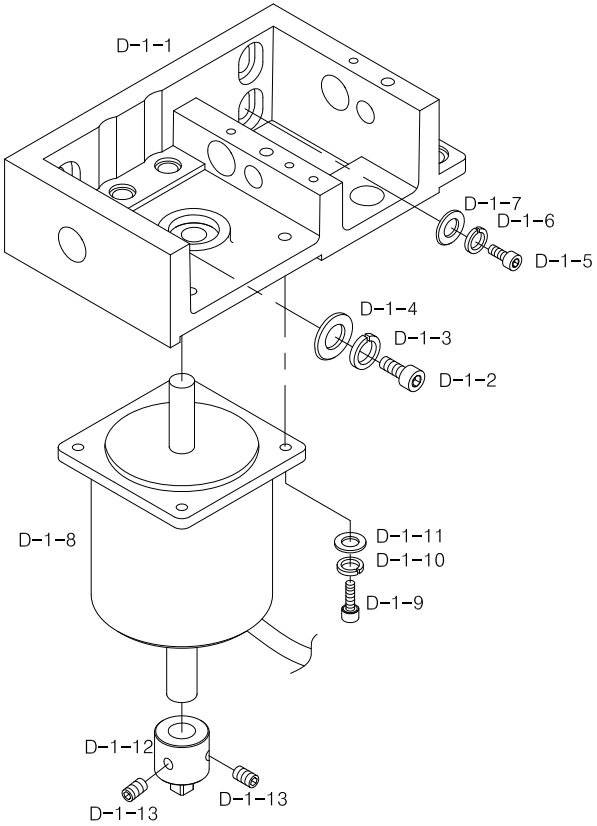

Note

Ref.No	Part No.	Part Name	Application date	Interchangeability	Hardware	Q'ty	Remarks
D-1-1	GP-034382-00	Mes Cam Driving Box	Oct,08,07 ~ Feb,03,08	X		1	
	GP-034382-01		Feb,04,08 ~	△			
D-1-2	14003SC-4113	Hex. Socket Bolt (M8*L25)			O	1	
D-1-3	15095SW-3115	Spring Washer (@8)			O	1	
D-1-4	04029SW-A001	Stud Bolt Washer(S) (@8)			O	1	
D-1-5	06025MC-7113	Hex.Socket Bolt(M6*L25)			O	2	
D-1-6	03026SW-9115	Spring Washer (@6)			O	2	
D-1-7	03025SW-1211	Washer (@6)			O	2	
D-1-8	16055AF-UK01	Y-MOTOR(103H8222-5013)				1	
D-1-9	18047SC-7113	HEX/ SOCKET BOLT (M5*L15)			O	4	
D-1-10	18048SW-3115	Spring Washer (@5)			O	4	
D-1-11	18049SW-3111	Washer (@5)			O	4	
D-1-12	03701200H000	Motor Driving Nob				1	
D-1-13	14060AF-4517	Hex.Socket Screw(M6*L6)			O	2	

D

D-2

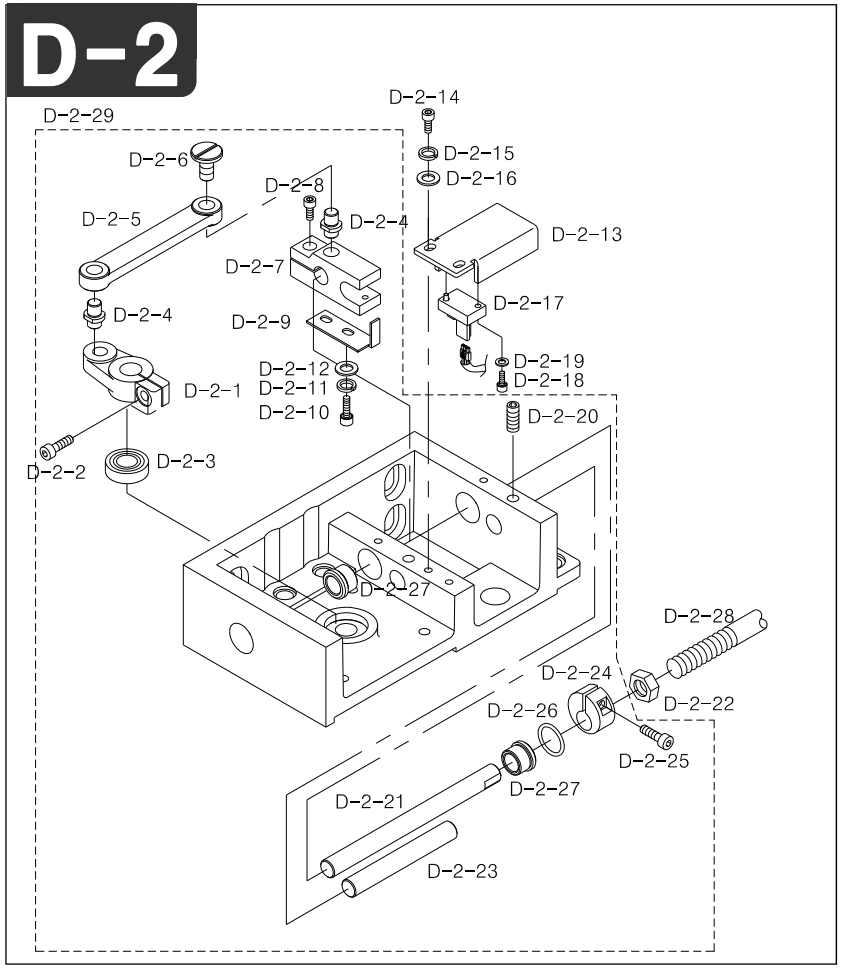

Note

Ref.No	Part No.	Part Name	Application date	Interchangeability	Hardware	Q'ty	Remarks
D-2-1	03700200H000	MES DRIVING CRANK				1	
D-2-2	14002SC-7113	HEX.SOCKET BOLT (M6*L15)			O	1	
D-2-3	03701000H000	Ball Bearing (6001Z)			O	1	
D-2-4	PN-000726-00	Mes Link Pin	Jan,13,09 ~	X		2	
D-2-5	GP-034383-00	Mes Driving Link	Oct,08,07 ~ Feb,03,08	X		1	
	GP-034383-01		Feb,04,08 ~	△			
D-2-6	03700500H000	Mes Driving Link Screw				1	
D-2-7	03700600H000	Mes Shaft Driving Clamp				1	
D-2-8	08062SC-7113	Hex. Socket Bolt (M5*L20)			O	1	
D-2-9	GP-015265-00	Limit Sensor Plate	Feb,15,06 ~ May,11,06	X		1	
	GP-015265-01		May,12,06 ~	△			
D-2-10	22006SC-7113	Hex. Socket Bolt (M3*L8)			O	2	
D-2-11	06011SW-2111	Washer (@3)			O	2	
D-2-12	11019SW-9115	Spring Washer (3@)			O	2	
D-2-13	GP-015264-00	Limit Sensor Base	Feb,15,06 ~ Apr,25,06	X		1	
	GP-015264-01		Apr,26,06 ~	△			
D-2-14	02015SC-7113	Hex.Socket Bolt(M4*L10)			O	2	
D-2-15	02028SW-9115	Spring Washer (@4)			O	2	
D-2-16	08053PR-A001	Lever Washer				2	
D-2-17	03701300H000	SENSOR ASSY TLP1204 (C1)				2	
D-2-18	09007SC-7113	Hex. Socket Bolt (M3*L12)			O	2	
D-2-19	06011SW-2111	Washer (@3)			O	2	
D-2-20	14060AF-4517	Hex.Socket Screw(M6*L6)			O	2	
D-2-21	23004SH-UK02	Mes Driving Shaft(@6, L=520)				1	
D-2-22	13042SN-1111	Hex.Nut (M6*T5-R)				1	
D-2-23	03700800H000	Mes Driving Shaft Guide				1	
D-2-24	08065CW-A001	Stopper Collar				1	
D-2-25	18047SC-7113	HEX/ SOCKET BOLT (M5*L15)			O	1	
D-2-26	08067RB-A001	O-Ring (@10)				1	
D-2-27	03701100H000	Mes Driving Shaft Bush				2	
D-2-28	GP-029446-00	Thread Cutting Shaft "A" @6 L=1190				1	
D-2-29	AS-006537-00	MES DRIVING Box Assy	Mar,29,07 ~	X		1	

D

D-3

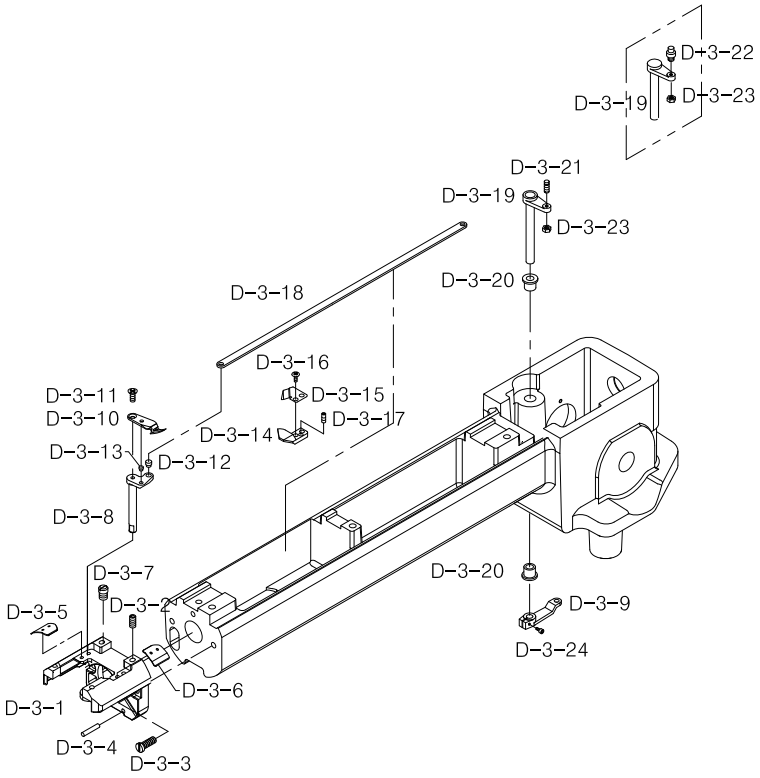

Note

Ref.No	Part No.	Part Name	Application date	Interchangeability	Hardware	Q'ty	Remarks
D-3-1	GP-005357-00	Needle Plate Bracket	Nov,01,04 ~ Jul,12,05	X		4	
	GP-005357-01		Jul,13,05 ~ Dec,03,08	△			
	GP-005357-02		Dec,04,08 ~	△			
D-3-2	02008SC-4122	Needle Plate Bracket Screw				8	
D-3-3	04037SC-A001	Picker Bracket Screw(R)				8	
D-3-4	02009PI-T121	Spring Pin				8	
D-3-5	GP-012800-00	Needle Plate Guide(L)				4	
D-3-6	GP-012801-00	Needle Plate Guide(R)				4	
D-3-7	04026SC-T121	Needle Plate Pin				4	
D-3-8	GP-006638-00	Moving Mes Shaft				4	
D-3-9	02100400U000	Mes Driving Lever				4	
D-3-10	07028PR-T121	Moving Mes				4	
D-3-11	08014SC-A001	Plus Screw (M3*L8)				4	
D-3-12	08122CW-A001	MES PIN				4	
D-3-13	08123CW-T121	MOVING MES CONNECTING LINK PIN				4	
D-3-14	07032CL-T121	Fixed Mes				4	
D-3-15	07033PR-T121	Under Thread Presser				4	
D-3-16	07018SC-8118	Plus Screw (M3*L8)				8	
D-3-17	03050SC-4517	Hex. Socket Set Screw (M3*L3)				4	
D-3-18	07006LA-UK01	Mes Connecting Link				4	
D-3-19	GP-028818-00	Mes Driving Lever Shaft				6	
D-3-20	07021MP-T121	Lever Shaft Bush				8	
D-3-21	07023CW-T121	Lever Pin "A"				3	
D-3-22	08122CW-UK01	Lever Pin "B"				1	
D-3-23	02029SN-9311	Hex. Nut (M4-No2)				4	
D-3-24	SC-001609-00	Mes Driving Lever Screw	Jan,13,09 ~	X		4	

D

Main Drive System

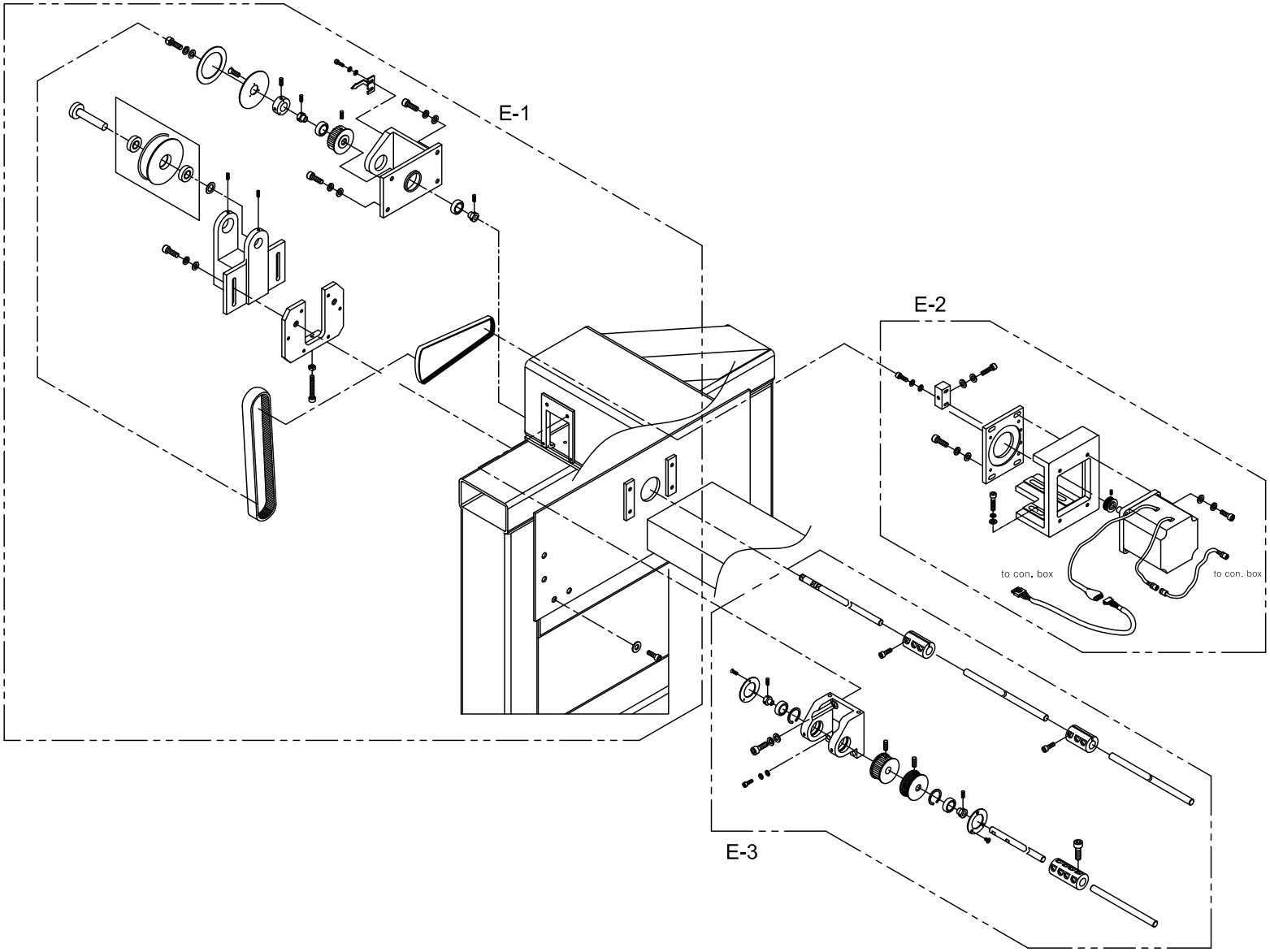

E-1

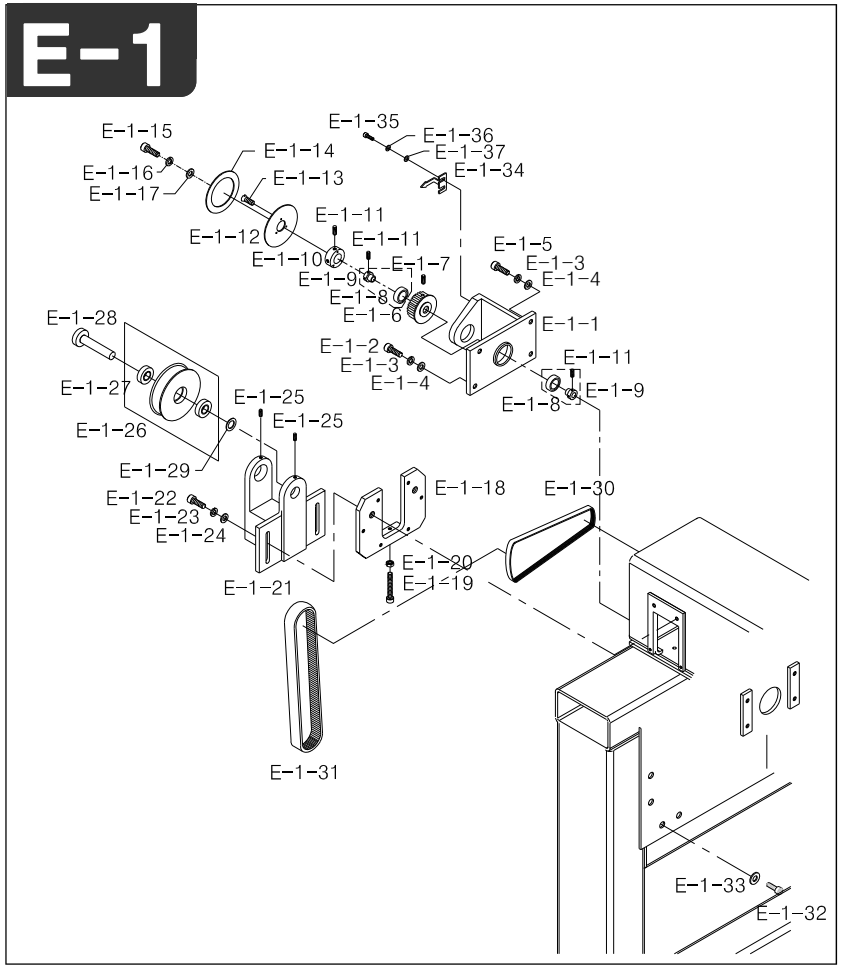

Note

Ref.No	Part No.	Part Name	Application date	Interchangeability	Hardware	Q'ty	Remarks
E-1-1	0301200U000	Low Shaft Support Bracket				1	
E-1-2	08091SC-7113	Hex. Socket Bolt (M6*L20)			O	2	
E-1-3	16014SW-4115	Spring Washer (@6)			O	4	
E-1-4	08057SW-1111	Washer (@6)			O	4	
E-1-5	06025MC-7113	HEX.SOCKET BOLT(M6*L25)			O	2	
E-1-6	GP-028946-00	Pulley (Tubular)				1	
E-1-7	14061AF-4517	Hex.Socket Screw(M8*L8)			O	8	
E-1-8	01029BR-A001	Ball Bearing (6004Zz)			O	2	
E-1-9	14058CW-A001	Collar "A"				2	
E-1-10	CL-000186-00	Collar	Apr,25,07 ~ May,30,07	X		1	
	CL-000186-01		May,31,07 ~ Dec,17,08	△			
	CL-000186-02		Dec,18,08 ~	△			
E-1-11	14060AF-4517	Hex.Socket Screw(M6*L6)			O	10	
E-1-12	13053PR-UK01	Angle Plate Base				1	
E-1-13	13061SC-8119	Plus Screw(M3*L10)			O	3	
E-1-14	13054ET-UK01	Angle Disk				1	
E-1-15	14006SC-7113	Hex.Socket Set Screw(M8*L15)			O	1	
E-1-16	15095SW-3115	Spring Washer (@8)			O	1	
E-1-17	04029SW-A001	STUD BOLT WASHER(S) (@8)			O	1	
E-1-18	13123CW-E121	Idler Plate				1	
E-1-19	14063SC-A001	Tension Control Bolt (M6*L40)			O	2	
E-1-20	13042SN-1111	Hex.Nut (M6*T5-R)			O	2	
E-1-21	13118CS-UK01	Idler Support Bracket				1	
E-1-22	14027SC-4113	Hex.Socket Bolt (M8*L30)			O	2	
E-1-23	15095SW-3115	Spring Washer (@8)			O	2	
E-1-24	08041SW-1111	Washer (@8-S)			O	2	
E-1-25	14060AF-4517	HEX.SOCKET SCREW(M6*L6)			O	2	
E-1-26	GP-006815-00	Idler				1	
E-1-27	13026BR-T121	Needle Bearing (6002Z)			O	2	
E-1-28	GP-006816-00	IDLER SHAFT				1	
E-1-29	GP-006817-00	Idler Spacer				1	
E-1-30	BE-000092-00	MAIN DRIVING BELT 200J*R10				1	
E-1-31	BE-000129-00	Timing Belt				1	
E-1-32	16059SC-7113	Hex.Socket Bolt (M6*L12)			O	2	
E-1-33	08057SW-1111	Washer (@6)			O	8	
E-1-34	GP-028949-00	INDICATOR				1	
E-1-35	02015SC-7113	HEX.SOCKET BOLT(M4*L10)			O	2	
E-1-36	02028SW-9115	SPRING WASHER (@4)			O	2	
E-1-37	18015SW-3111	Washer (4@)			O	1	

E-2

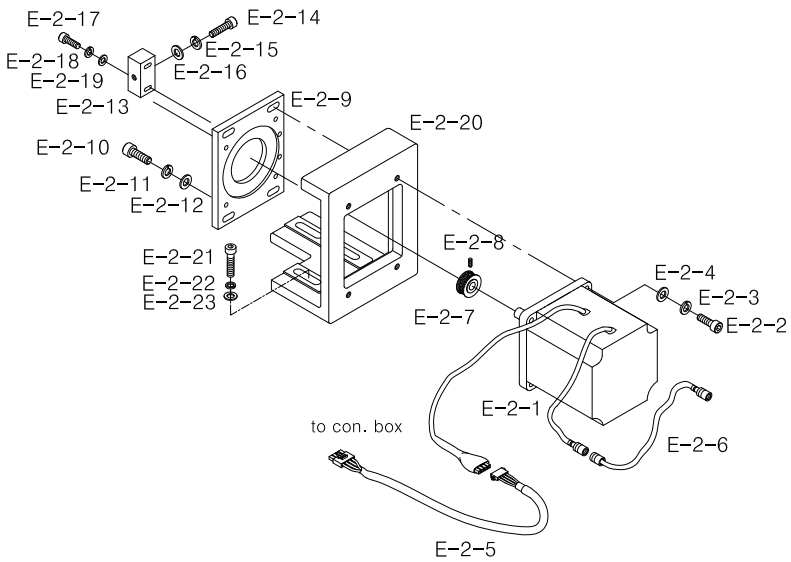

Note

Ref.No	Part No.	Part Name	Application date	Interchangeability	Hardware	Q'ty	Remarks
E-2-1	EP-000125-00	Direct Motor (750W)				1	
E-2-2	08062SC-7113	HEX. SOCKET BOLT (M5*L20)			O	4	
E-2-3	18048SW-3115	Spring Washer (5@)			O	4	
E-2-4	18049SW-3111	Washer (@5)			O	4	
E-2-5	02106500U040	Sh-65-2				1	
E-2-6	02106400U040	Cable (Sh-64-2)				1	
E-2-7	GP-024097-00	MAIN MOTOR PULLEY	Dec,09,06 ~ Jun,08,07	X		1	
	GP-024097-01		Jun,09,07 ~	△			
E-2-8	04014SC-4517	Hex.Socket Set Screw(M5*L5)			O	2	
E-2-9	GP-028947-00	Motor Fixing				1	
E-2-10	08091SC-7113	HEX. SOCKET BOLT (M6*L20)			O	4	
E-2-11	16014SW-4115	Spring Washer (@6)			O	4	
E-2-12	08057SW-1111	Washer (@6)			O	4	
E-2-13	GP-008404-00	Tension Adjusting Block				1	
E-2-14	14063SC-A001	Tension Control Bolt (M6*L40)			O	1	
E-2-15	08057SW-1111	Washer (@6)			O	1	
E-2-16	08058SN-1311	Hex. Nut (M6-No3)			O	1	
E-2-17	08062SC-7113	Hex. Socket Bolt (M5*L20)			O	2	
E-2-18	18048SW-3115	Spring Washer (5@)			O	2	
E-2-19	18049SW-3111	Washer (@5)			O	2	
E-2-20	GP-028948-00	Main Motor Bracket	Apr,16,07 ~ Apr,25,07	X		1	
	GP-028948-01		Apr,26,07 ~	△			
E-2-21	13003SC-4113	Hex. Socket Bolt (M8*L35)			O	3	
E-2-22	15095SW-4115	Spring Washer (@8)			O	3	
E-2-23	15077SW-2111	Washer (@8)			O	3	

E

E-3

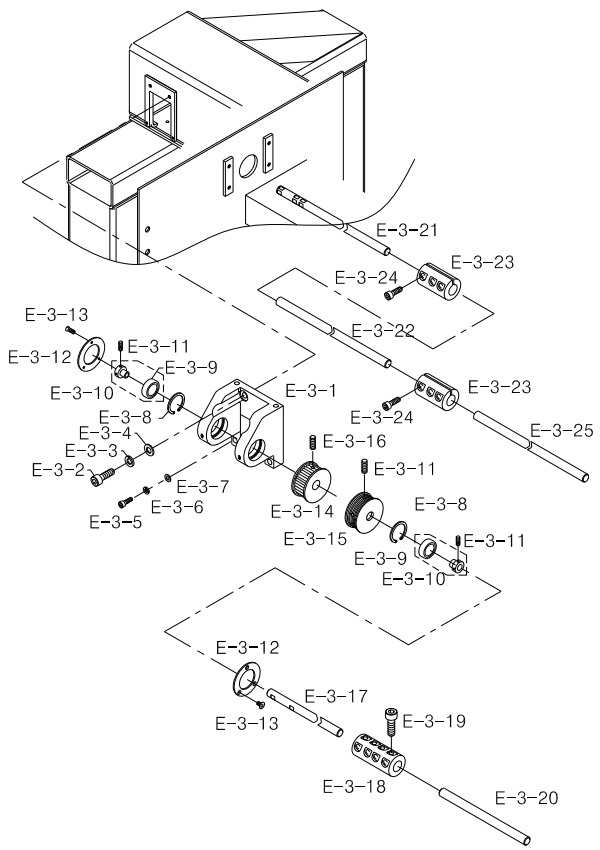

Note

Ref.No	Part No.	Part Name	Application date	Interchangeability	Hardware	Q'ty	Remarks
E-3-1	GP-029941-00	UPPER SHAFT SUPPORT BRACKET	May,03,07 ~ Dec,02,08	X		1	
	GP-029941-01		Dec,03,08 ~	△			
E-3-2	08087SC-7113	HEX. SOCKET BOLT (M8*L25)			O	2	
E-3-3	15095SW-3115	SPRING WASHER (@8)			O	2	
E-3-4	08041SW-1111	WASHER (@8-S)			O	2	
E-3-5	14046SC-7113	HEX.SOCKET BOLT (M6*L30)			O	2	
E-3-6	03026SW-9115	Spring Washer (@6)			O	2	
E-3-7	08057SW-1111	WASHER (@6)			O	2	
E-3-8	03010SR-4013	C-Ring (@47)				2	
E-3-9	01001100H000	Ball Bearing (6005Zz)				2	
E-3-10	03005210H000	Bearing Stopper Collar				2	
E-3-11	14060AF-4517	Hex.Socket Screw(M6*L6)			O	10	
E-3-12	03101400U000	Upper Shaft Support Cover				2	
E-3-13	22006SC-7113	HEX. SOCKET BOLT (M3*L8)			O	6	
E-3-14	GP-028945-00	Pulley (Tubular)				1	
E-3-15	GP-024098-00	TOP SHAFT PULLEY				1	
E-3-16	14061AF-4517	Hex.Socket Screw(M8*L8)			O	8	
E-3-17	03000100UK60	Top Shaft "A" (L1505.5)				1	
	GP-028159-00	Top Shaft "A" (L2305.5) (UK1504)					
	GP-029325-00	Top Shaft "A" (L1305.5) (UK1502)	Apr,23,07 ~ Aug,29,07	X			
	GP-029325-01		Aug,30,07 ~	△			
E-3-18	GP-044599-00	COUPLING @20	Dec,23,08 ~	X		1	
E-3-19	08091SC-7113	Hex. Socket Bolt (M6*L20)			O	4	
E-3-20	03000200UK60	Top Shaft "B" (L1800) (UK1506)				1	
E-3-21	GP-029133-00	Low SHAFT "A" (L352)	Apr,18,07 ~ Jun,08,07	X		1	
	GP-029133-01		Jun,09,07 ~	△			
E-3-22	GP-029134-01	Low SHAFT "B" (L1550) (UK1506)				1	
	GP-029322-01	Low SHAFT "B" (L1962) (UK1504)					
	GP-030058-00	Low SHAFT "B" (L962) (UK1502)	Apr,23,07 ~ Jun,08,07	X			
	GP-030058-01		Jun,09,07 ~	△			
E-3-23	03000710F000	Low Shaft Coupling				2	
E-3-24	02031SC-7113	Hex. Socket Bolt (M5*L10)			O	6	
E-3-25	GP-029135-01	Low SHAFT "C" (L1410) (UK1506)				1	

E

Y-Axis

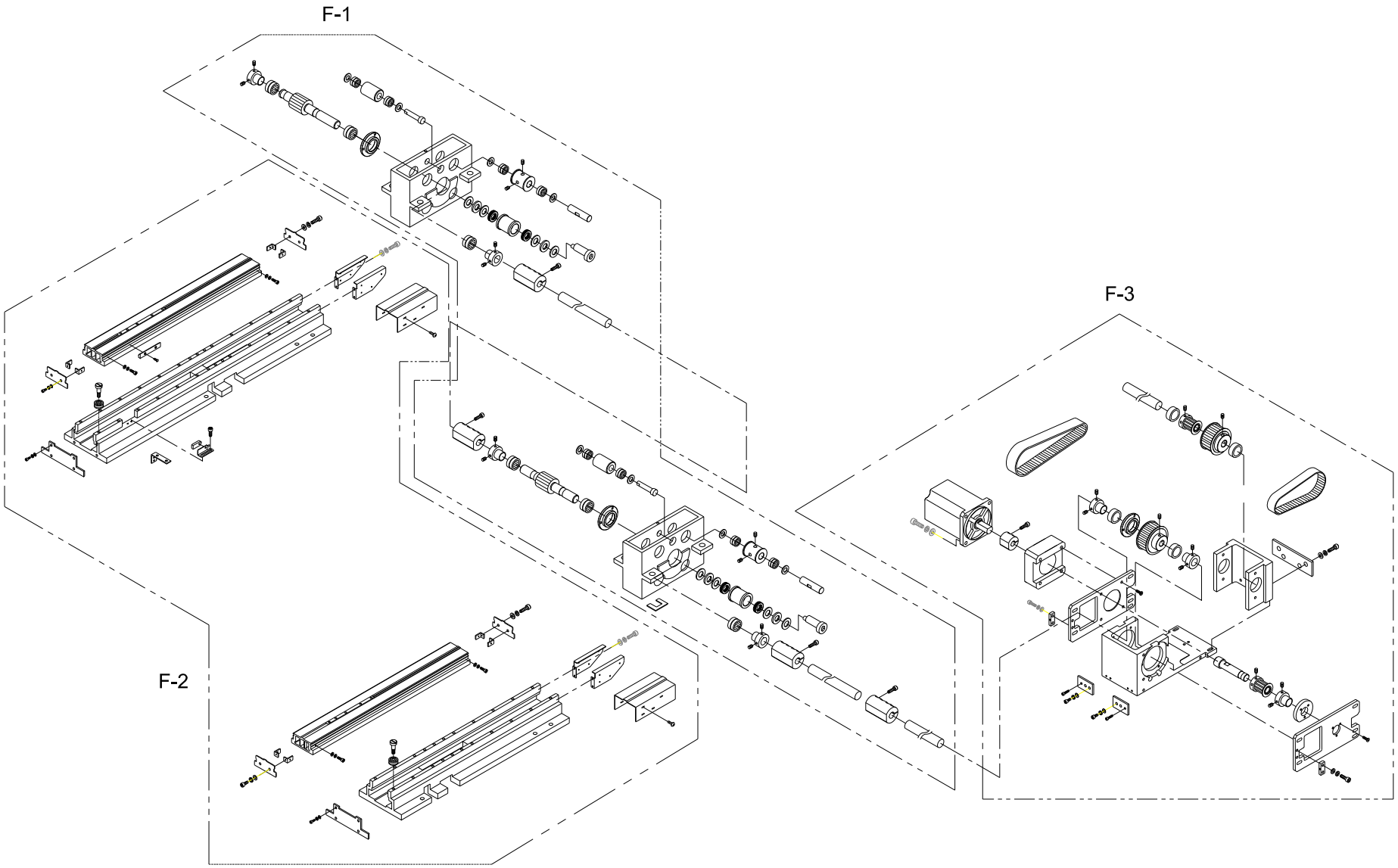

F-1

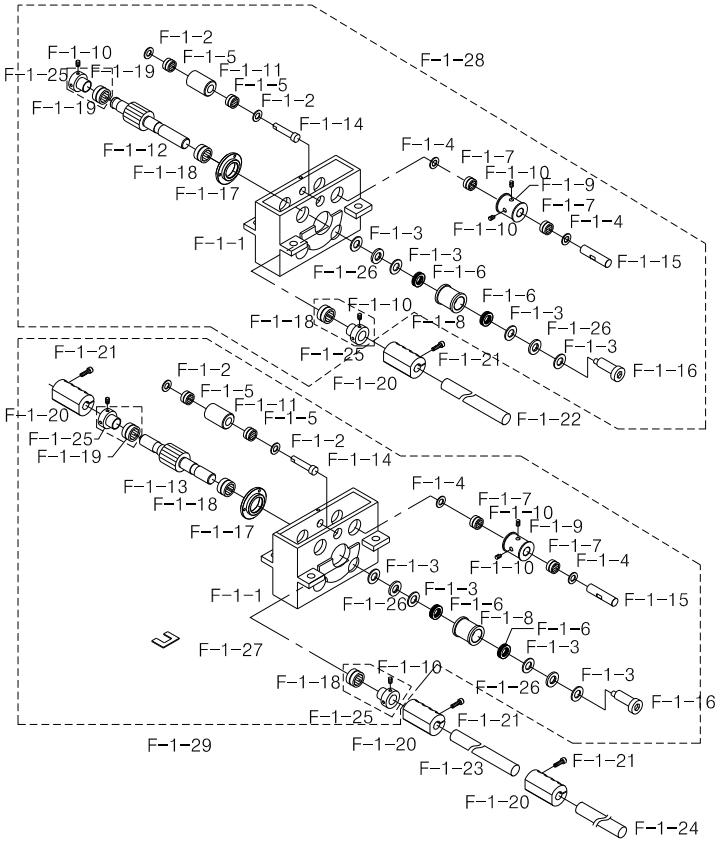

Note

Ref.No	Part No.	Part Name	Application date	Interchangeability	Hardware	Q'ty	Remarks
F-1-1	GP-029017-00	Y-Driving Box	Apr,17,07 ~ Apr,25,07	X		4	
	GP-029017-01		Apr,26,07 ~ May,22,07	△			
	GP-029017-02		May,23,07 ~ Aug,20,07	△			
	GP-029017-03		Aug,21,07 ~ Aug,30,07	△			
	GP-029017-04		Aug,31,07 ~ Sep,20,07	△			
	GP-029017-05		Sep,21,07 ~ Dec,17,08	△			
	GP-029017-06		Dec,18,08 ~	△			
F-1-2	07024BR-UK01	Washer (φ8)			O	16	
F-1-3	08028BR-A001	Trust Washer (AS1528)				16	
F-1-4	WS-000293-00	Washer (φ10)			O	24	
F-1-5	06-129A-106L	Needle Bearing (IKO TLA810Z)			O	16	
F-1-6	BR-000233-00	Idler Shaft Bearing (NA4901 IKO)				16	
F-1-7	12018BR-T121	Needle Bearing (IKO TLA1010Z)				24	
F-1-8	GP-027503-00	Y-Idler A	Mar,18,07 ~ Apr,20,07	X		8	
	GP-027503-01		Apr,21,07 ~ Jun,08,07	△			
	GP-027503-02		Jun,09,07 ~ Aug,20,07	△			
	GP-027503-03		Aug,21,07 ~ Aug,30,07	△			
	GP-027503-04		Aug,31,07 ~ Sep,20,07	△			
	GP-027503-05		Sep,21,07 ~ Dec,17,08	△			
	GP-027503-06		Dec,18,08 ~	△			
F-1-9	GP-027504-00	Y-Idler B	Mar,08,07 ~ Aug,20,07	X		8	
	GP-027504-01		Aug,21,07 ~ Sep,13,07	△			
	GP-027504-02		Sep,14,07 ~ Dec,17,08	△			
	GP-027504-03		Dec,18,08 ~	△			
F-1-10	14060AF-4517	Hex. Socket Screw (M6*L6)			O	20	
F-1-11	GP-029015-00	Y-Idler C	Apr,17,07 ~ Aug,20,07	X		4	
	GP-029015-01		Aug,21,07 ~ Aug,30,07	△			
	GP-029015-02		Aug,31,07 ~	△			
F-1-12	GP-029019-00	Y-Driving Pulley Shaft A (Φ20)	Apr,17,07 ~ May,30,07	X		2	
	GP-029019-01		May,31,07 ~ Nov,07,07	△			
	GP-029019-02		Nov,08,07 ~	△			
F-1-13	GP-029020-00	Y-Driving Pulley Shaft B (Φ20)	Apr,17,07 ~ May,30,07	X		2	
	GP-029020-01		May,31,07 ~	△			
F-1-14	PN-000408-00	Y-Idler Pin A	Jan,25,07 ~ Jul,03,07	X		8	
	PN-000408-01		Jul,04,07 ~ Aug,08,07	△			
	PN-000408-02		Aug,09,07 ~ Aug,30,07	△			
	PN-000408-03		Aug,31,07	△			
F-1-15	PN-000409-00	Y-Idler Pin B	Jan,25,07 ~ Aug,08,07	X		8	
	PN-000409-01		Aug,09,07 ~ Aug,30,07	△			
	PN-000409-02		Aug,31,07 ~	△			
F-1-16	GP-027520-00	Y-Idler Shaft	Mar,08,07 ~ May,07,07	X		8	
	GP-027520-01		May,08,07 ~ Aug,30,07	△			
	GP-027520-02		Aug,31,07 ~ Oct,04,07	△			
	GP-027520-03		Oct,05,07 ~ Dec,15,08	△			
	GP-027520-04		Dec,16,08 ~	△			

F-1

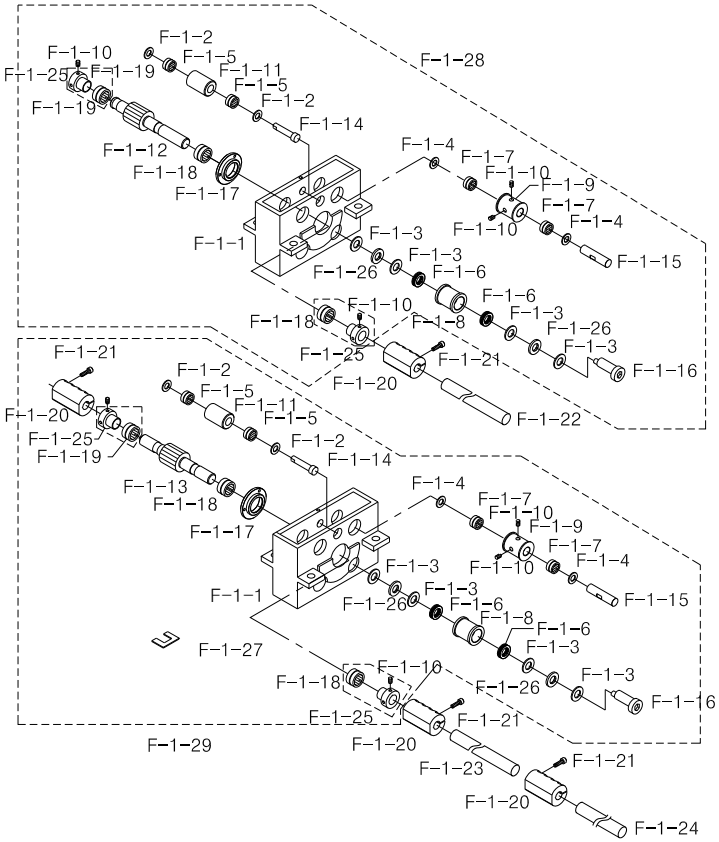

Note

Ref.No	Part No.	Part Name	Application date	Interchangeability	Hardware	Q'ty	Remarks
F-1-17	GP-033164-00	Y-Driving Shaft Bearing Case	Aug,16,07 ~	X		5	
	GP-033164-01		Sep,12,07 ~	△		5	
	GP-033164-02		Dec,18,08 ~	△		5	
F-1-18	04000630I000	Bearing (6905ZZ)			O	4	
F-1-19	01001100H000	Bearing (6005ZZ)			O	2	
F-1-20	GP-044599-00	COUPLING @20	Dec,23,08 ~	X		8	
F-1-21	08091SC-7113	Hex. Socket Bolt (M6*L20)			O	34	
F-1-22	GP-029128-00	Y-Driving Shaft A(L=1083)				2	
F-1-23	GP-029129-00	Y-Driving Shaft B(L=329)	Apr,18,07 ~ Aug,20,07	X		2	
	GP-029129-01		Aug,21,07 ~	△			
F-1-24	GP-029022-00	Y-Motor Box Shaft Φ20	Apr,17,07 ~ May,06,07	X		1	
	GP-029022-01		May,07,07 ~ Jul,06,07	△			
	GP-029022-02		Jul,07,07 ~	△			
F-1-25	CL-000138-00	Stopper Collar	Nov,23,06 ~	X		10	
	CL-000138-01		Apr,09,07 ~	△			
	CL-000138-02		Jan,13,09 ~	△			
F-1-26	08027BR-A001	Trust Bearing 1528 (NTN)				16	
F-1-27	GP-029583-00	Spacer				16	
F-1-28	AS-006824-00	Y-Driving "A" Assy	May,17,07 ~	X		2	
	AS-006824-01		Sep,06,07 ~	△			
	AS-006824-02		Apr,06,09 ~	△			
F-1-29	AS-006825-00	Y-Driving "B" Assy	May,17,07 ~	X		2	
	AS-006825-01		Apr,06,09 ~	△			

F

F-2

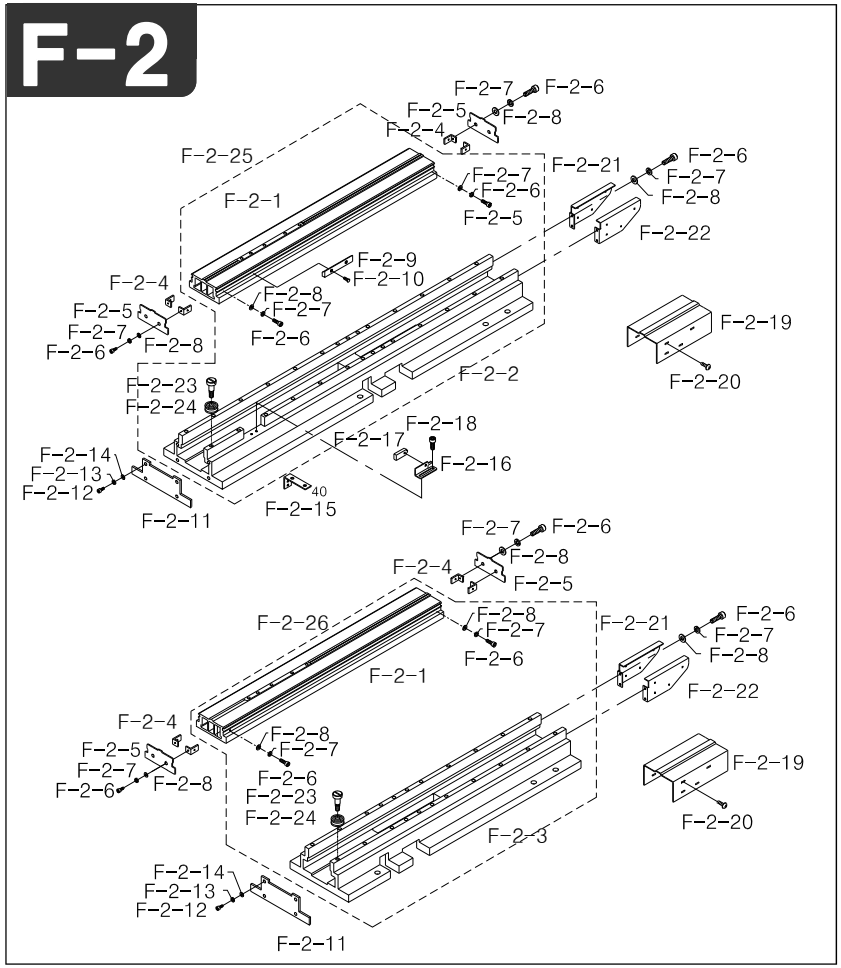

Note

Ref.No	Part No.	Part Name	Application date	Interchangeability	Hardware	Q'ty	Remarks
F-2-1	GP-029026-00	Y-Moving Frame	Apr,17,07 ~ Apr,18,07	X		4	
	GP-029026-01		Apr,19,07 ~ Apr,25,07	△			
	GP-029026-02		Apr,26,07 ~ May,01,07	△			
	GP-029026-03		May,02,07 ~ May,13,07	△			
	GP-029026-04		May,14,07 ~ Aug,20,07	△			
	GP-029026-05		Aug,21,07 ~	△			
F-2-2	GP-029127-00	Y-Fixed Frame A	Apr,18,07 ~ Apr,25,07	X		2	
	GP-029127-01		Apr,26,07 ~ Aug,08,07	△			
	GP-029127-02		Aug,09,07 ~ Nov,01,07	△			
	GP-029127-03		Nov,02,07 ~	△			
F-2-3	GP-029016-00	Y-Fixed Frame B	Apr,18,07 ~ Apr,25,07	X		2	
	GP-029016-01		Apr,26,07 ~ Aug,08,07	△			
	GP-029016-02		Aug,09,07 ~ Nov,01,07	△			
	GP-029016-03		Nov,02,07 ~	△			
F-2-4	GP-029249-00	Y-Cover Bracket				16	
F-2-5	GP-029250-00	Y-Frame Cover	Apr,19,07 ~ Jun,08,07	X		8	
	GP-029250-01		Jun,09,07 ~ Jul,01,07	△			
	GP-029250-02		Jul,02,07 ~	△			
F-2-6	03071SC-4113	Hex. Socket Bolt (M3*L10)			O	8	
F-2-7	02028SW-9115	Spring Washer			O	8	
F-2-8	03030SW-1211	Washer			O	8	
F-2-9	GP-029120-00	Y- Sensing Plate				1	
F-2-10	08014SC-A001	Fixed Screw				2	
F-2-11	GP-029560-00	Y-Fixed Frame Front Cover				4	
F-2-12	02015SC-4113	Hex. Socket Bolt (M4*L10)			O	8	
F-2-13	02028SW-9115	Spring Washer			O	8	
F-2-14	03030SW-1211	Washer			O	8	
F-2-15	GP-029126-00	Y-Fixed Frame Fix Plate				2	
F-2-16	GP-029121-00	Y- Sensor Plate				1	
F-2-17	EP-000067-00	Xy-Sensor				2	
F-2-18	05007SC-4113	Hex. Socket Bolt (M3*L5)			O	2	
F-2-19	GP-029547-00	Y-Frame Rear Cover				4	
F-2-20	02010SC-3123	Truss Bolt (M4*L10)			O	32	
F-2-21	GP-029548-00	Y-Frame Rear Cover Bracket A				4	
F-2-22	GP-029549-00	Y-Frame Rear Cover Bracket B				4	
F-2-23	16002CW-B001	Cam Roller Bolt				96	
F-2-24	15001BR-B001	Cam Roller Bearing (LFR50/5KDD4)				96	
F-2-25	AS-008356-00	Y-Fixed Frame A Assy	Mar,05,08 ~	X		2	
F-2-26	AS-008657-00	Y-Fixed Frame B Assy	Mar,16,08 ~	X		2	

F

F-3

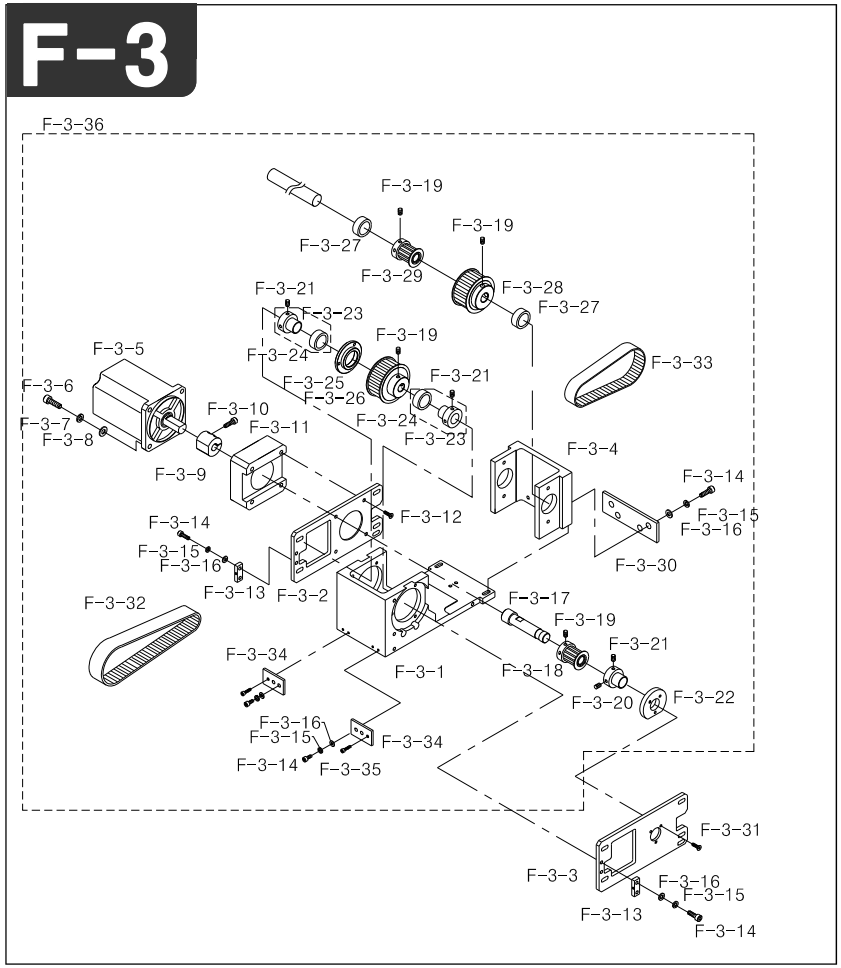

Note

Ref.No	Part No.	Part Name	Application date	Interchangeability	Hardware	Q'ty	Remarks
F-3-1	GP-029021-00	Y-Motor Box	Apr,17,07 ~ May,01,07	X		1	
	GP-029021-01		May,02,07 ~ Jun,17,07	△			
	GP-029021-02		Jun,18,07 ~	△			
F-3-2	GP-029023-00	Y-Motor Plate A	Apr,17,07 ~ Apr,19,07	X		1	
	GP-029023-01		Apr,20,07 ~ Apr,26,07	△			
	GP-029023-02		Apr,27,07 ~ May,01,07	△			
	GP-029023-03		May,02,07 ~ May,06,07	△			
	GP-029023-04		May,07,07 ~ May,27,07	△			
	GP-029023-05		May,28,07 ~	△			
F-3-3	GP-029025-00	Y-Motor Plate B	Apr,17,07 ~ Apr,19,07	X		1	
	GP-029025-01		Apr,20,07 ~ May,01,07	△			
	GP-029025-02		May,02,07 ~	△			
F-3-4	GP-029018-00	Y-Pulley Bracket	Apr,17,07 ~ May,01,07	X		1	
	GP-029018-01		May,02,07 ~	△			
F-3-5	SFAM-1000-03	Y-MOTOR				1	
F-3-6	14006SC-4113	Hex. Socket Bolt (M8*L15)			O	4	
F-3-7	15095SW-4115	Spring Washer			O	4	
F-3-8	08041SW-1111	Washer			O	4	
F-3-9	04001700H000	Coupling				1	
F-3-10	08091SC-7113	Hex. Socket Bolt (M6*L20)			O	34	
F-3-11	GP-030086-00	Motor Block				1	
F-3-12	15048SC-4119	Bolt (M5*L12)			O	4	
F-3-13	GP-029291-00	Tension Block				2	
F-3-14	02031SC-4113	Hex. Socket Bolt (M5*L10)			O	4	
F-3-15	16019SW-4115	Spring Washer			O	4	
F-3-16	18049SW-3111	Washer			O	4	
F-3-17	GP-026171-00	Y-Motor Shaft	Jan,30,07 ~ May,06,07	X		1	
	GP-026171-01		May,07,07 ~	△			
F-3-18	GP-027587-00	Y-Motor Driving Pulley Φ16 16T				1	
F-3-19	14061AF-4517	Hex. Socket Screw (M8*L8)			O	8	
F-3-20	CL-000160-00	Y-Motor Bearing Collar				1	
F-3-21	14060AF-4517	Hex. Socket Screw (M6*L6)			O	20	
F-3-22	GP-028979-00	Y-Motor Bearing Case @20	Apr,16,07 ~	X		1	
	GP-028979-01		Dec,18,08 ~	△			
F-3-23	CL-000138-00	Stopper Collar	Nov,23,06 ~	X		10	
	CL-000138-01		Apr,09,07 ~	△			
	CL-000138-02		Jan,13,09 ~	△			
F-3-24	01001100H000	Bearing (6005ZZ)				2	
F-3-25	GP-033164-00	Y-Driving Shaft Bearing Case	Aug,16,07 ~	X		5	
F-3-25	GP-033164-01	Y-Driving Shaft Bearing Case	Sep,12,07 ~	△		5	
	GP-033164-02		Dec,18,08 ~	△			
F-3-26	GP-025977-00	Y-Pulley Φ20 (45T)	Jan,25,07 ~ May,21,07	X		1	
	GP-025977-01		May,22,07 ~	△			
F-3-27	02-009A-8180	Bearing (6005NR)				2	
F-3-28	GP-025974-00	Y-Motor Driving Pulley Φ15 36T	Jan,25,07 ~ May,15,07	X		1	
	GP-025974-01		May,16,07 ~	△			

F

F-3

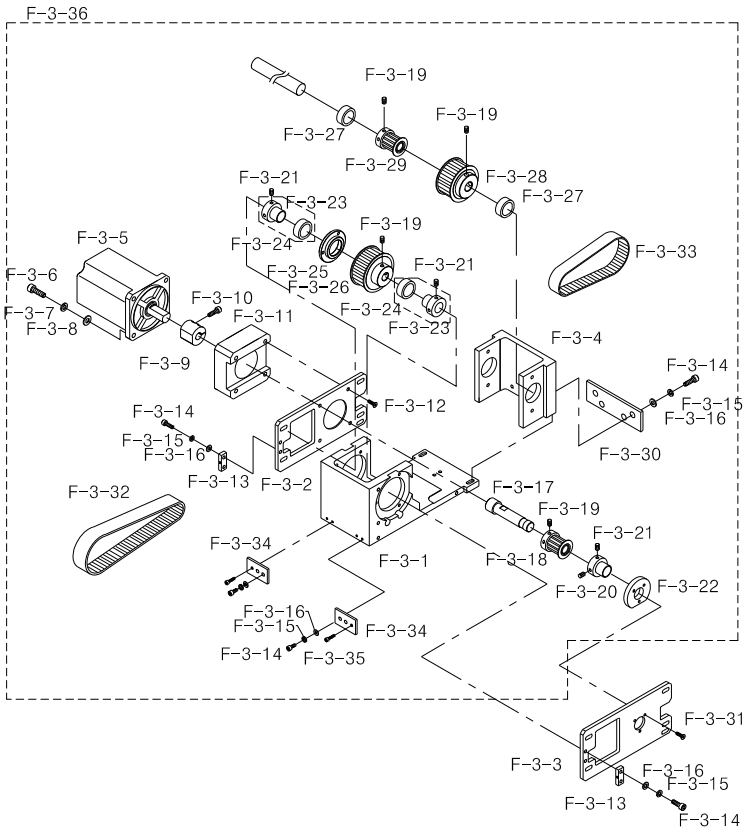

Note

Ref.No	Part No.	Part Name	Application date	Interchangeability	Hardware	Q'ty	Remarks
F-3-29	GP-025965-00	Y-Driving Pulley (20T) (@15)	Jan,25,07 ~ May,13,07	X		1	
	GP-025965-01		May,14,07 ~ May,21,07	△			
	GP-025965-02		May,22,07 ~	△			
F-3-30	GP-029027-00	Tension Plate A	Apr,17,07 ~ May,01,07	X		1	
	GP-029027-01		May,02,07 ~	△			
F-3-31	15089SC-8119	Bolt (M4*L12)			O	3	
F-3-32	BE-000096-00	Y-Driving Box Belt (S5M L425 W25)				5	
F-3-33	BE-000112-00	Y-Motor Belt(S5M L255 W25)				1	
F-3-34	GP-029028-00	Tension Plate B	Apr,17,07 ~ May,01,07	X		2	
	GP-029028-01		May,02,07 ~	△			
F-3-35	11029SC-4113	Hex. Socket Bolt (M4*L20)			O	2	
F-3-36	AS-007459-00	Y-Motor Box Assy	Sep,10,07 ~	X		1	

F

Head & Color Change

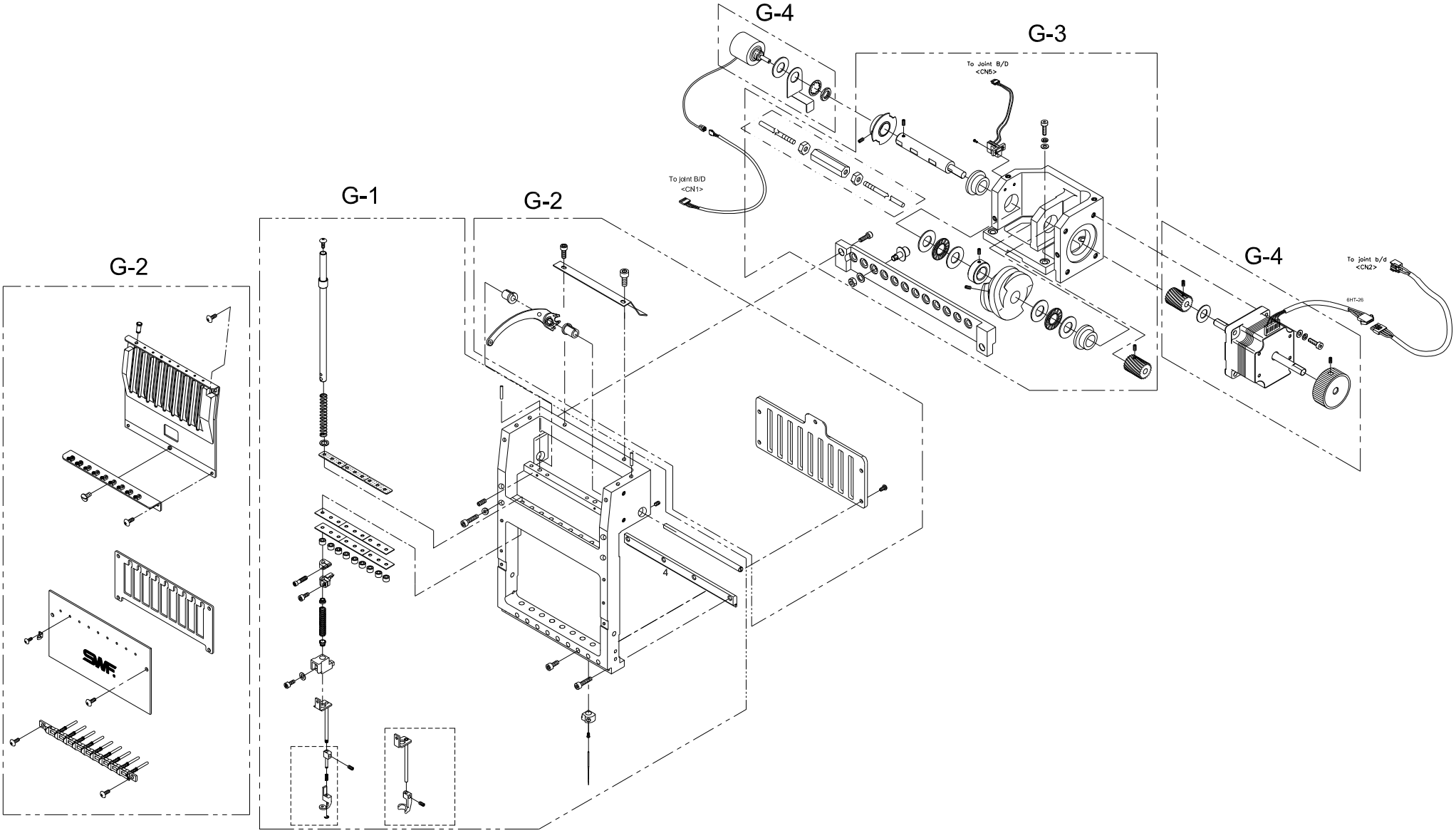

G-1

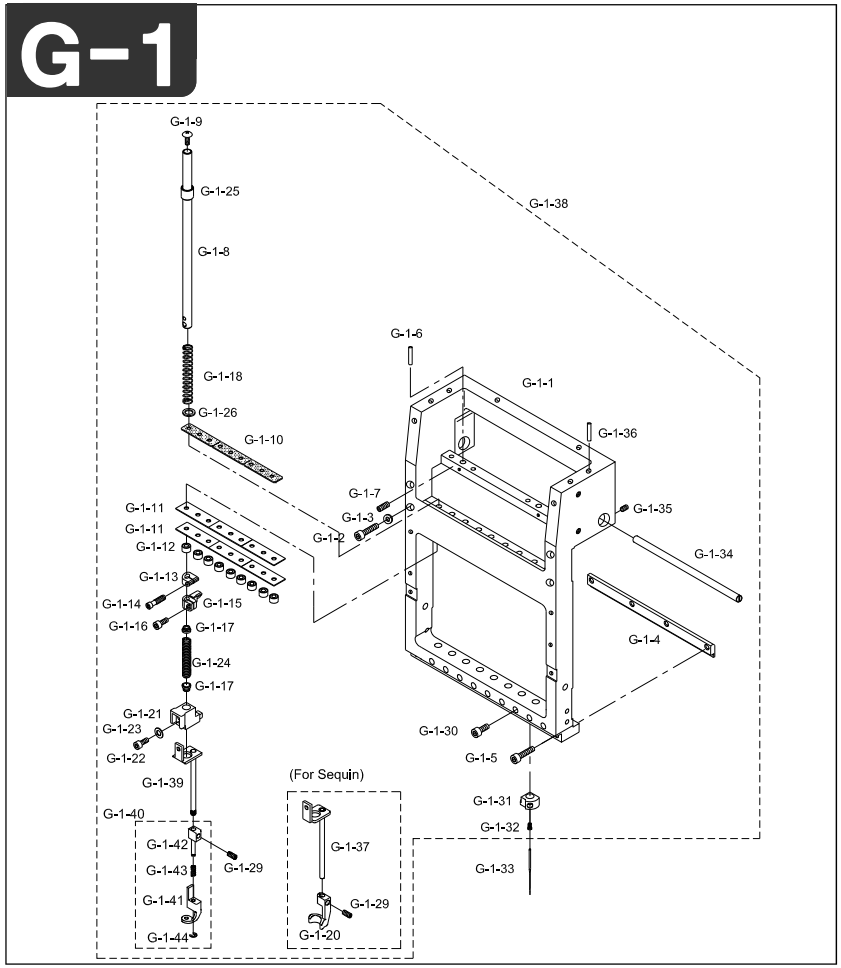

Note

Ref.No	Part No.	Part Name	Application date	Interchangeability	Hardware	Q'ty	Remarks
G-1-1	GP-027340-00	Head (6C)	Mar,06,07 ~ Mar,16,07	X		6	
	GP-027340-01		Mar,17,07 ~ Aug,23,07	△			
	GP-027340-02		Aug,24,07 ~	△			
	GP-024669-00	Head (9C)	Dec,19,06 ~ Jan,22,07	X			
	GP-024669-01		Jan,23,07 ~ Mar,16,07	△			
	GP-024669-02		Mar,17,07 ~ Aug,23,07	△			
	GP-024669-03		Aug,24,07 ~ Nov,01,07	△			
	GP-024669-04		Nov,02,07 ~ Sep,10,08	△			
	GP-024669-05		Sep,11,08 ~ Nov,02,08	△			
	GP-024669-06		Nov,03,08 ~	△			
	GP-027022-00	Head (12C)	Feb,26,07 ~ Mar,16,07	X			
	GP-027022-01		Mar,17,07 ~ Aug,23,07	△			
	GP-027022-02		Aug,24,07 ~ Nov,01,07	△			
	GP-027022-03		Nov,02,07 ~ Sep,10,08	△			
	GP-027022-04		Sep,11,08 ~ Nov,02,08	△			
	GP-027022-05		Nov,03,08 ~	△			
	GP-023978-00	Head (15C)	Dec,06,06 ~ Jan,22,07	X			
	GP-023978-01		Jan,23,07 ~ Aug,23,07	△			
	GP-023978-02		Aug,24,07 ~ Nov,01,07	△			
	GP-023978-03		Nov,02,07 ~ Sep,10,08	△			
	GP-023978-04		Sep,11,08 ~ Nov,02,08	△			
	GP-023978-05		Nov,03,08 ~	△			
G-1-2	05008SC-4113	Hex.Socket Bolt (M4*L16)			O	24	
G-1-2	06003SW-2111	Washer (@4)			O	24	
G-1-4	GP-011944-00	Head Rail (9C)	Sep,14,05 ~ Sep,10,08	X		6	
	GP-011944-01		Sep,11,08 ~	△			
	GP-014096-00	Head Rail (12C)	Dec,24,05 ~ Sep,10,08	X			
	GP-014096-01		Sep,11,08 ~	△			
G-1-5	SC-000417-00	Hex. Socket Bolt (M4*L23)			O	12	
G-1-6	05015CW-A001	Head Base Pin(@5*L15)				12	
G-1-7	03022SC-4517	Hex. Socket Set Screw(M4*L5)			O	12	
G-1-8	LNB-KA000100	Needle Bar				54	
	LNB-KA000101						
G-1-9	05019SC-A001	Needle Bar Cover Screw (M5*L6)				54	
G-1-10	05021SF-A001	FELT				36	
G-1-11	05023RB-A001	Needle Bar Cushion Rubber "A"				36	
G-1-12	05024RB-A001	Needle Bar Cushion Rubber "B"				54	
G-1-13	11101200T000	Upper Dead Point Stopper				54	
G-1-14	05026SC-4113	Stopper Screw (9/64-11.5)				54	
G-1-15	GP-044777-00	Needle Bar Holder	Jan,12,09 ~	X		54	
	GP-044777-01		Jan,18,10 ~	△			
G-1-16	05028SC-4113	Holder Screw (9/64-L8)				54	
G-1-17	05021PM-H001	Presser Foot Spring Guide				108	
G-1-18	GP-021613-00	Needle Bar Return Spring				108	
G-1-20	GP-025795-00	PRESSER FOOT (L) Sequin	Jan,24,07 ~ Apr,04,07	X		108	

G

G-1

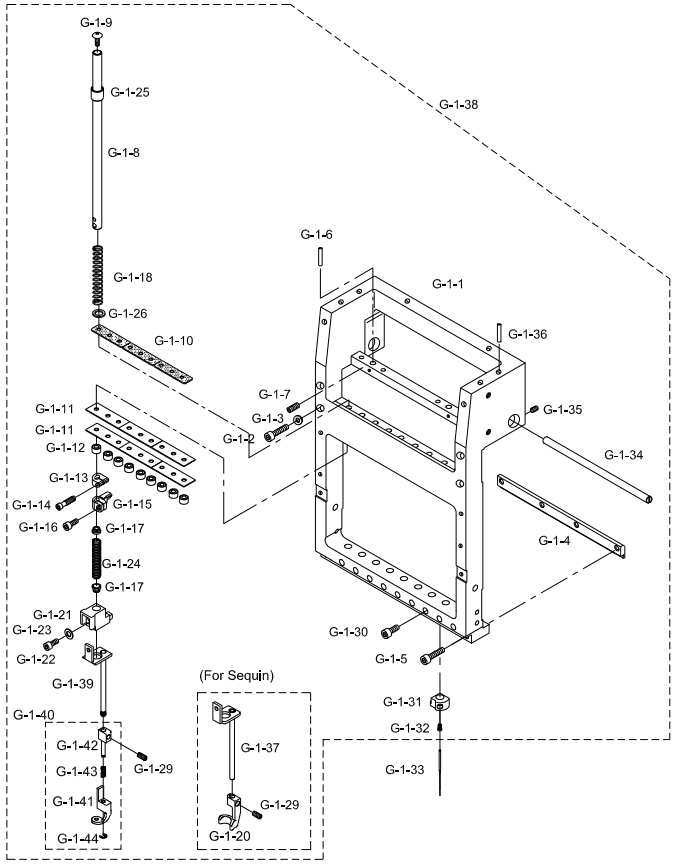

Note

Ref.No	Part No.	Part Name	Application date	Interchangeability	Hardware	Q'ty	Remarks
G-1-20	GP-025795-01		Apr,05,07 ~ Jul,26,07	△			
	GP-025795-02		Jul,27,07 ~ Aug,28,07	△			
	GP-025795-03		Aug,29,07 ~ Dec,26,07	△			
	GP-025795-04		Dec,27,07 ~ Jan,09,09	△			
	GP-025795-05		Jan,09,09 ~	△			
G-1-21	GP-026844-00	Presser Foot Holder A'ssy	Feb,16,07 ~ Nov,21,07	X		108	
	GP-026844-01		Nov,22,07 ~ Feb,12,08	△			
	GP-026844-02		Feb,13,08 ~ Feb,17,08	△			
	GP-026844-03		Feb,18,08 ~ Oct,01,08	△			
	GP-026844-04		Oct,02,08 ~	△			
G-1-22	05026SC-H001	Presser Foot Bolt				108	
G-1-23	05027PR-H001	PRESSER FOOT HOLDER WASHER				54	
G-1-24	GP-024661-00	PRESSER FOOT PRESSURE SPRING				108	
G-1-25	GP-025785-00	Needle Bar Bushing(U)				54	
G-1-26	05022SW-A001	SPRING SHOE WASHER				54	
G-1-29	SC-001081-00	Presser foot Fixed Screw				54	
G-1-30	SC-000417-00	Hex.Socket Bolt(M4)			O	12	
G-1-31	AS-007290-00	Needle Fixed Holder Set	Jul,31,07 ~ Aug,08,07	X		108	
	AS-007290-01		Aug,09,07 ~ Oct,23,07	△			
	AS-007290-02		Oct,24,07 ~ May,22,08	△			
	AS-007290-03		May,23,08 ~ Dec,01,08	△			
	AS-007290-04		Dec,02,08 ~	△			
G-1-32	05363SC-A001	Needle Fixed Screw (A/S)				108	
G-1-33	05037DB-A001	Needle (Db-K5, #11)				108	
G-1-34	08200503A000	Take-Up Lever Shaft (9C)				6	
G-1-35	07009SC-4517	Hex. Socket Bolt(M5*L6)			O	12	
G-1-36	11027CW-A001	TENSION PLATE PIN				12	
G-1-37	AS-007362-00	Presser foot Guide Shaft Set Sequin	Aug,22,07 ~	X		54	
	AS-007362-01		Oct,05,07 ~	△			
	AS-007362-02		Feb,12,08 ~	△			
	AS-007362-03		Feb,18,02 ~	△			
G-1-38	AS-006679-00	Head Ass' y (6c)	Apr.23.07 ~ Aug.08.07	X		6	
	AS-006679-01		Aug.09.07 ~ Oct.04.07	△			
	AS-006679-02		Oct.05.07 ~ Feb.17.08	△			
	AS-006679-03		Feb.18.08 ~ Jun.10.13	△			
	AS-006679-04		Jun.11.13 ~	△			
	AS-006437-00	Head Assy (9c)	Mar,17,07 ~ Aug.08.07	X		6	
	AS-006437-01		Aug,09,07 ~ Oct.04.07	△			
	AS-006437-02		Oct,05,07 ~ Feb.17.08	△			
	AS-006437-03		Feb,18,08 ~	△			
	AS-006437-04		Jun.11.13 ~	△			
	AS-006530-00	Head Assy (12c)	Mar,28,07 ~	X		6	
	AS-006530-01		Aug,09,07 ~	△			
	AS-006530-02		Oct,05,07 ~	△			
	AS-006530-03		Feb,18,08 ~	△			

G

G-1

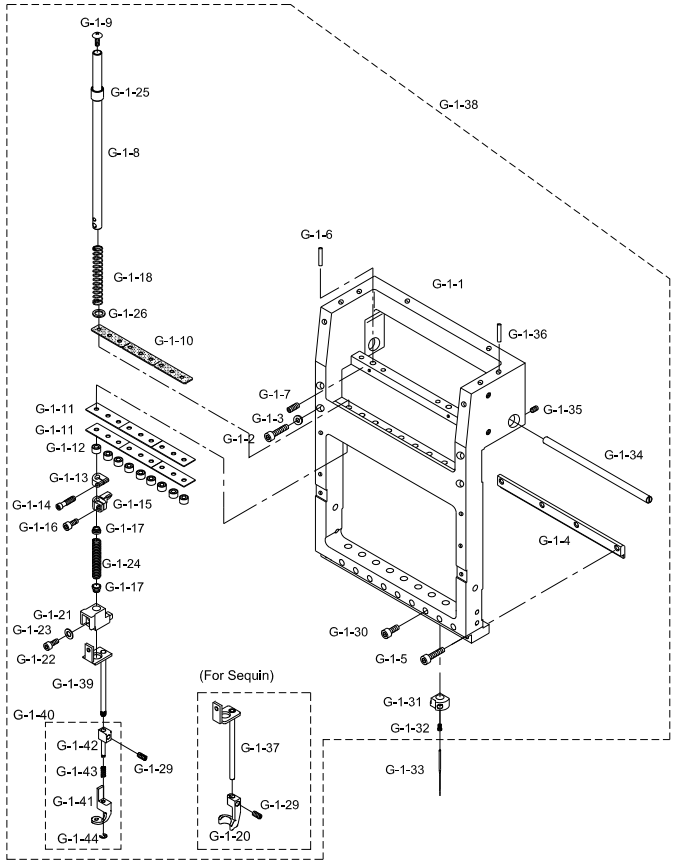

Note

Ref.No	Part No.	Part Name	Application date	Interchangeability	Hardware	Q'ty	Remarks
G-1-38	AS-006530-04	Head Assy (12c)	Jun.11.13 ~	△		6	
	AS-006504-00	Head Assy (15c)	Mar,26,07 ~	X		6	
	AS-006504-01		Aug,09,07 ~	△			
	AS-006504-02		Feb,18,08 ~	△			
	AS-006504-03		Jun.11.13 ~	△			
G-1-39	AS-018390-00	Presser foot Guide Shaft Set	Jun.11.13 ~	X		54	
G-1-40	AS-019402-00	Presser foot Assy	Jun.11.13 ~	X		54	
G-1-41	GP-052455-00	Presser foot A	Jun.11.13 ~	X		54	
G-1-42	GP-052457-00	Presser foot B	Jun.11.13 ~	X		54	
G-1-43	SP-000153-00	Presser Foot Pressure Spring				54	
G-1-44	SR-000003-00	E-ring				54	

G

G-2

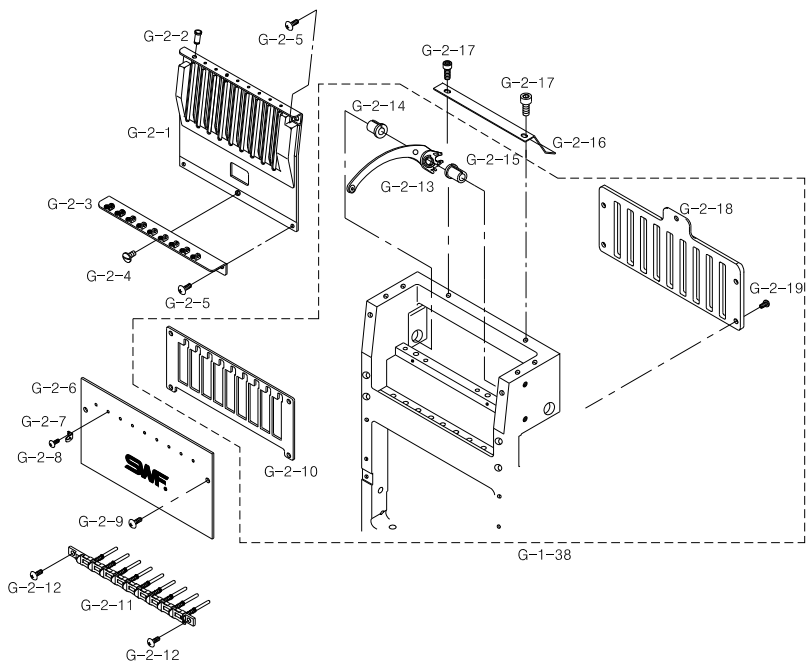

Note

Ref.No	Part No.	Part Name	Application date	Interchangeability	Hardware	Q'ty	Remarks
G-2-1	10200103B000	Head Face Plate (U) 9C				6	
G-2-2	10200100H000	Thread Guide Bush "A-1"				54	
G-2-3	10300002A000	Thread Guide (M) Set (6C)				6	
	AS-000484-00	Thread Guide (M) Set (9C)	Jun,23,04 ~ May,09,07	X			
	AS-000484-01		May,10,07 ~ Jun,17,07	△			
	AS-000484-02		Jun,18,07 ~ Aug,28,07	△			
	AS-000484-03		Aug,29,07 ~ Dec,10,08	△			
	AS-000484-04		Dec,11,08 ~ Dec,11,08	△			
	AS-000484-05		Dec,11,08 ~ Jan.14.09	△			
	AS-000484-06		Jan.14.09 ~ Jan.30.09	△			
	AS-000484-07		Jan.30.09 ~ Feb.17.09	△			
	AS-000484-08		Feb.17.09 ~ Jan.26.10	△			
	AS-000484-09		Jan.26.10 ~ Aug.13.10	△			
	AS-000484-10		Aug.13.10 ~	△			
	10300004A000	Thread Guide (M) Set (12C)					
	10300005A000	Thread Guide (M) Set (15C)					
G-2-4	05062SC-A001	Thread Guide (M) Screw (9/64 n=40)				6	
G-2-5	05070SC-3123	Head Face Plate (U) Screw			O	24	
G-2-6	GP-024674-00	Head Face Plate(L)	Dec,19,06 ~ Feb,25,07	X		6	
	GP-024674-01		Feb,26,07 ~	△			
G-2-7	11012PR-B001	Thread Guide				54	
G-2-8	09005SC-3123	Truss Bolt (M3*L5)			O	54	
G-2-9	05070SC-3123	HEAD FACE PLATE (U) SCREW				12	
G-2-10	GP-025788-00	Presser Foot Holder Guide Rail	Jan,23,07 ~ May,20,08	X		6	
	GP-025788-01		May,21,08 ~ Jun,30,08	△			
	GP-025788-02		Jul,01,08 ~ Aug,21,08	△			
	GP-025788-03		Aug,22,08 ~	△			
G-2-11	07005BM-B002	Take-Up Lever Set				54	
G-2-12	05070SC-3123	Truss Bolt 9/64 n=40				12	
G-2-13	07005BM-B002	Take-Up Lever Set				54	
G-2-14	08203000A000	Take-Up Lever Shaft Bush(L)				6	
G-2-15	08200800A000	Take-Up Lever Shaft Bush(R)				6	
G-2-16	11047PR-A002	Cable Support "B"				6	
G-2-17	02023SC-7113	Hex.Socket Bolt(M4*L5)			O	12	
G-2-18	GP-008539-00	Needle Bar Guide Rail (6C)				6	
	GP-011931-00	Needle Bar Guide Rail (9C)					
	GP-014095-00	Needle Bar Guide Rail (12C)					
G-2-19	05041SC-A001	Bolt (9/64 n=40)				30	

G

G-3

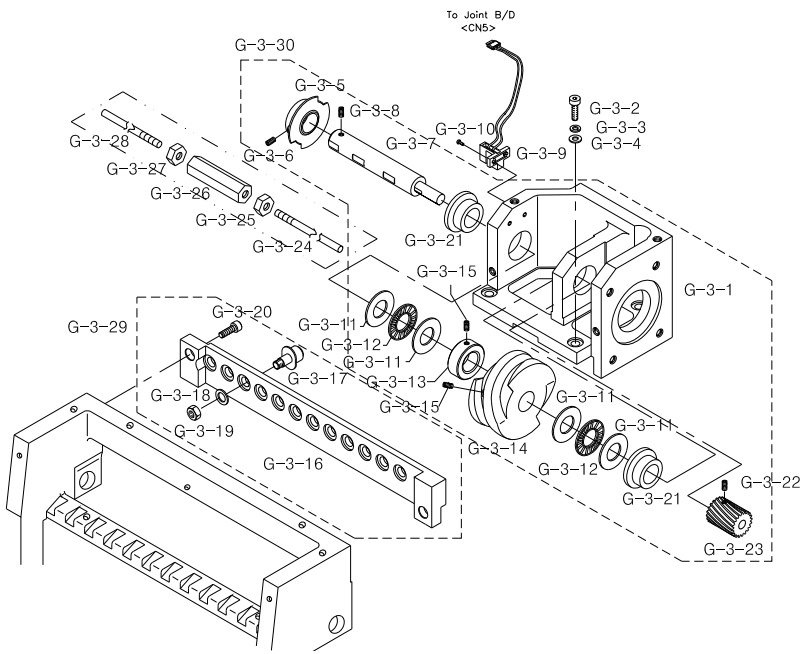

Note

Ref.No	Part No.	Part Name	Application date	Interchangeability	Hardware	Q'ty	Remarks
G-3-1	13001CA-UK06	Color Change Base				1	
G-3-2	05008SC-4113	Hex.Socket Bolt (M4*L16)			O	4	
G-3-3	18014SW-3115	Spring Washer (@4-No2)			O	4	
G-3-4	18015SW-3111	Washer (4@)			O	4	
G-3-5	13032AD-UK06	Color Change Film Set				1	
G-3-6	04014SC-4517	Hex.Socket Set Screw(M5*L5)			O	2	
G-3-7	13007CW-UK06	Color Change Shaft				1	
G-3-8	08113SC-A001	Collar Screw				1	
G-3-9	08102300B000	Half Turn Sensor (Gp1S51V)				1	
G-3-10	08006SC-8118	Plus Screw (M3*L5)			O	2	
G-3-11	13010BR-T121	Washer(@12*@26*1T)				4	
G-3-12	13041BR-UK01	Washer(12*@26*1T)				2	
G-3-13	13010CW-UK06	Color Change Collar				1	
G-3-14	13005CM-UK06	Color Change Cam				1	
G-3-15	04012AF-A001	Hook Shaft Bush Screw				5	
G-3-16	08103102C010	Color Change Roller Base (6C)				1	
	13026CL-D104	Color Change Roller Base (9C)				1	
	13026CL-UK06	Color Change Roller Base (12C)				1	
	13026CL-UK16	Color Change Roller Base (15C)				1	
G-3-17	GP-037692-00	Roller Set				12	
G-3-18	18048SW-3115	Spring Washer (@5)			O	12	
G-3-19	12010SN-1211	Hex.Nut (M5)			O	12	
G-3-20	18047SC-7113	Hex/ Socket Bolt (M5*L15)			O	2	
G-3-21	GP-006252-00	Color Change Bushing				2	
G-3-22	08113SC-A001	Collar Screw				4	
G-3-23	13021GA-UK06	Color Change Gear (R)				1	
G-3-24	23012SH-UK16	Color Change Shaft "A" (@6,L1386) (15C)				1	
	23012SH-UK06	Color Change Shaft "A" (@6,L1363.5) (12C)				1	
	06000102UK60	Color Change Shaft "A" (@6,L1318.5) (9C)				1	
	06000102UK60	Color Change Shaft "A" (@6,L1318.5) (6C)				1	
G-3-25	17053SN-1111	Hex. Nut(L) (M6*T5-L)			O	1	
G-3-26	17051SN-A001	Mes Priving Shaft Joint				1	
G-3-27	13042SN-1111	Hex.Nut (M6*T5-R)			O	1	
G-3-28	23013SH-UK16	Color Change Shaft "B" (@6,L1386) (15C)				1	
	23013SH-UK06	Color Change Shaft "B" (@6,L1363.5) (12C)				1	
	23013SH-UK06	Color Change Shaft "B" (@6,L1363.5) (9C)				1	
	06000202UK60	Color Change Shaft "B" (@6,L1318.5) (6C)				1	
G-3-29	05000005U000	Color Change Roller Base Assy				1	
G-3-30	AS-004640-00	Color Change Motor Assy	May,08,06 ~	X		1	

G

G-4

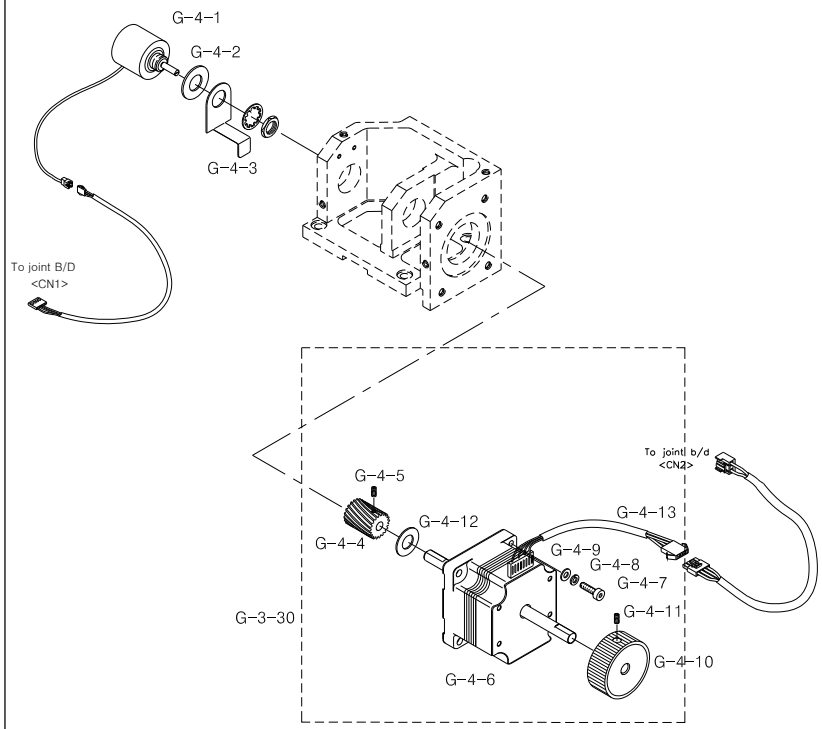

Note

Ref.No	Part No.	Part Name	Application date	Interchangeability	Hardware	Q'ty	Remarks
G-4-1	15012MT-T121	Potentiometer (7824 R1K L25)				1	
G-4-2	15014PR-T121	Potentiometer Washer				1	
G-4-3	13015PR-UK06	Potentiometer Bracket				1	
G-4-4	13020GA-UK06	Color Change Gear (L)				1	
G-4-5	08113SC-A001	Collar Screw				4	
G-4-6	13027MT-UK06	Color Change Motor				1	
G-4-7	05008SC-4113	Hex.Socket Bolt (M4*L16)			O	4	
G-4-8	02028SW-9115	Spring Washer (@4)			O	4	
G-4-9	05009SW-1111	Washer (@4-L)			O	4	
G-4-10	13022AD-UK06	Color Change Passivity Handle				1	
G-4-11	03020SC-A001	Drive Pin Screw 11/64,N40,L8				2	
G-4-12	13019PR-A001	Half Turn Film Washer (T1.0)				1	
G-4-13	25025EL-UK06	Cable (25-25)				1	

G

Setting

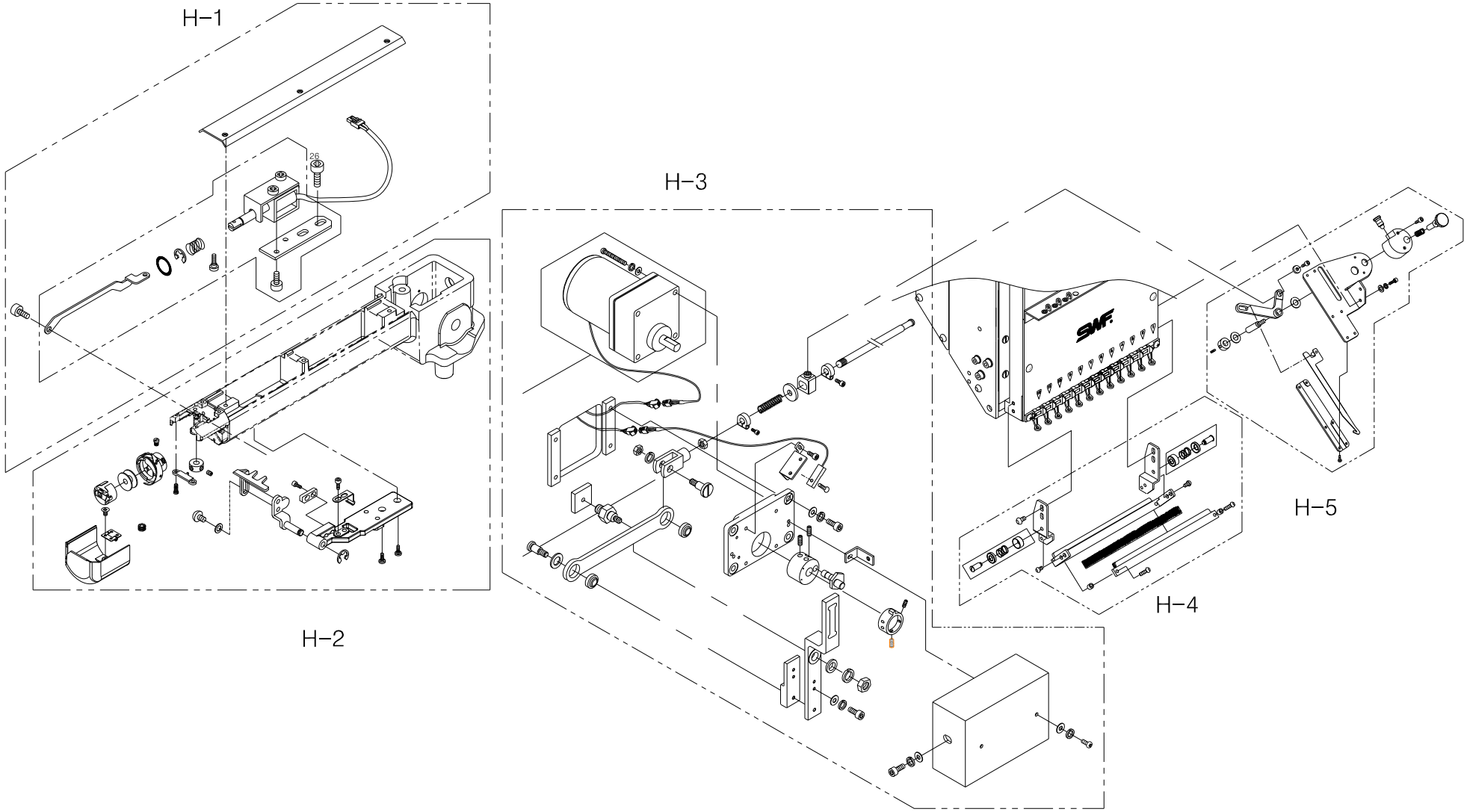

H-1

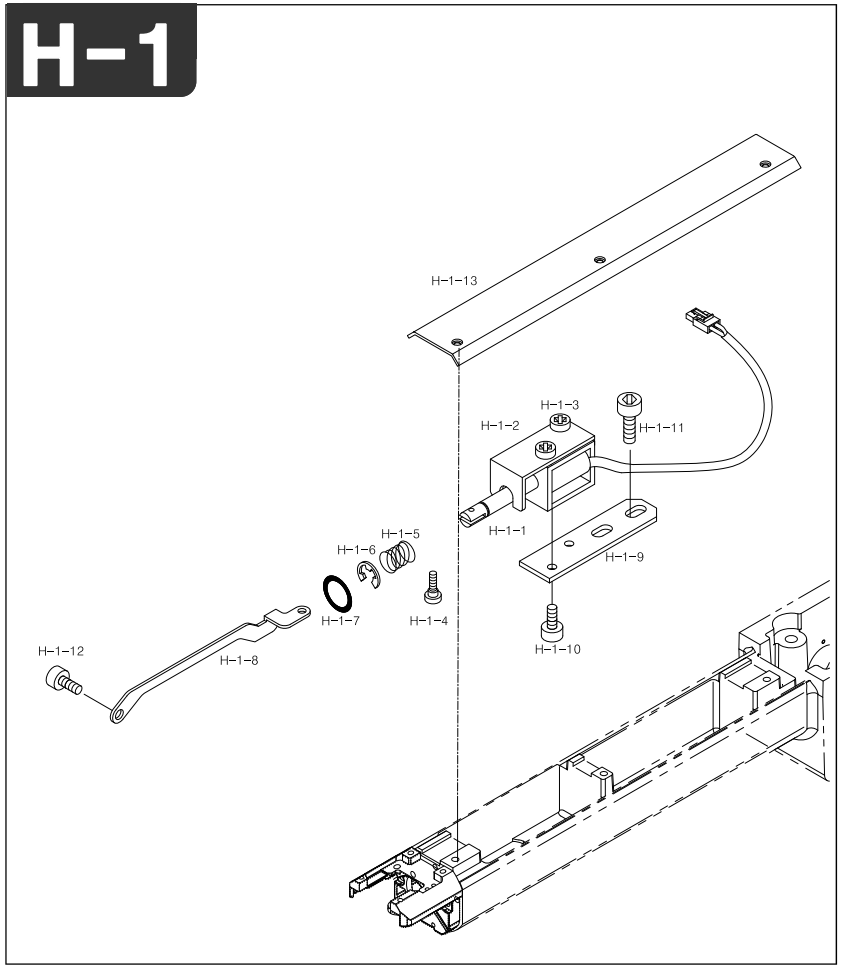

Note

Ref.No	Part No.	Part Name	Application date	Interchangeability	Hardware	Q'ty	Remarks
H-1-1	10009EL-T121	Picker Sol.				4	
H-1-2	01-012A-AT10	Picker Sol. Cover				4	
H-1-3	28021SC-3123	Truss Screw (M3*L4)			O	8	
H-1-4	10021SC-A001	Sol. Stud Screw				4	
H-1-5	10011SP-A001	Sol. Spring				4	
H-1-6	13044SR-4013	E-Ring (@4)			O	4	
H-1-7	10012RB-A001	Cushion Washer				4	
H-1-8	GP-005370-00	Connecting Plate				4	
H-1-9	01-013A-AT10	Picker Sol. Base				4	
H-1-10	06010AF-8118	Plus Screw(M3*L4)			O	8	
H-1-11	02015SC-7113	Hex.Socket Bolt(M4*L10)			O	8	
H-1-12	08012CW-T121	Connecting Plate Stud Screw				4	
H-1-13	GP-026703-00	Rail Guide Bed Cover				6	

H

H-2

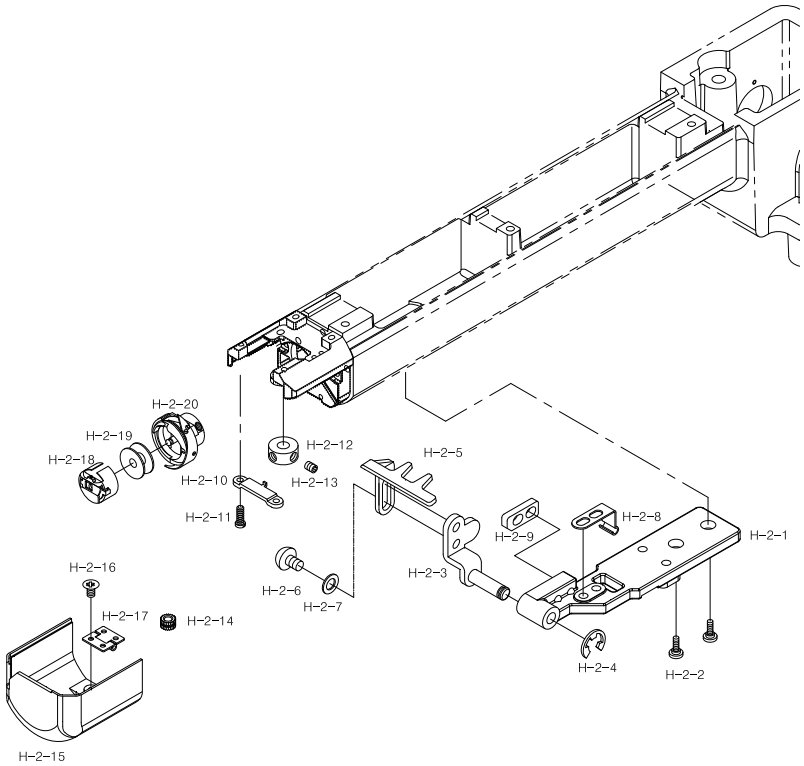

Note

Ref.No	Part No.	Part Name	Application date	Interchangeability	Hardware	Q'ty	Remarks
H-2-1	GP-005366-00	Picker Bracket				4	
H-2-2	116410S-8118	Driver Screw 11/64-40,L10				4	
H-2-3	AS-001429-00	Picker Base Ass'Y	Nov,01,04 ~ May,29,06	X		4	
	AS-001429-01		May,30,06 ~ Dec,03,08	△			
	AS-001429-02		Dec,04,08 ~	△			
H-2-4	15159SR-4013	E-Ring (3@)			O	4	
H-2-5	GP-005368-00	Picker				4	
H-2-6	07018SC-8118	Plus Screw (M3*L8)			O	8	
H-2-7	WS-000085-00	Washer for Picker Base				4	
H-2-8	GP-005362-00	Hook Cover Holder				4	
H-2-9	GP-005369-00	Picker Stopper	Nov,01,04 ~ May,18,05	X		4	
	GP-005369-01		May,19,05 ~	△			
H-2-10	GP-005358-00	Rotary Hook Support	Nov,01,04 ~ Jul,12,05	X		4	
	GP-005358-01		Jul,13,05 ~	△			
H-2-11	02011SC-3125	Rotary Hook Support Screw				8	
H-2-12	13003000T000	Mes Shaft Collar				4	
H-2-13	03022SC-4517	Hex. Socket Set Screw(M4*L5)			O	8	
H-2-14	GP-005361-00	Hook Cover Insert				8	
H-2-15	GP-005360-00	Hook Cover	Nov,01,04 ~ Oct,19,05	X		4	
	GP-005360-01		Oct,20,05 ~ May,24,06	△			
	GP-005360-02		May,25,06 ~	△			
H-2-16	08014AF-A001	Plus Screw (M3*L8)			O	8	
H-2-17	HG-000001-00	Hook Cover Hinge				4	
H-2-18	04034AF-A001	Bobbin Case Set				4	
H-2-19	04035AF-A001	Bobbin				4	
H-2-20	04033AF-D002	Rotary Hook Set				4	

H

H-3

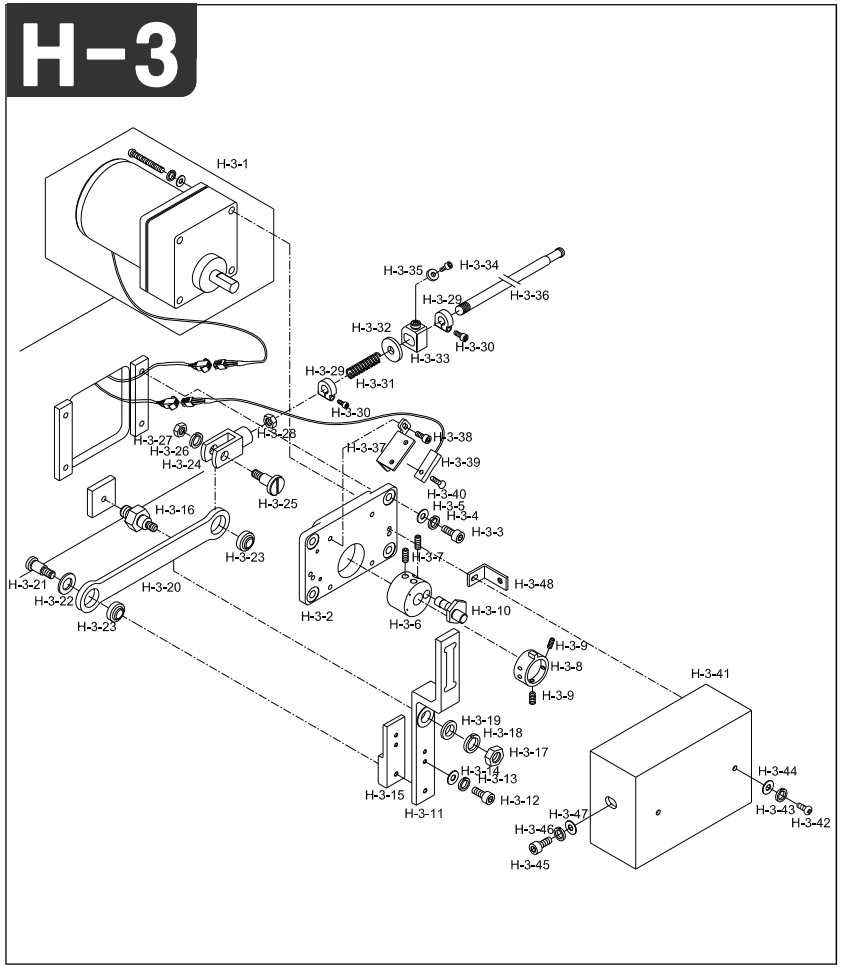

Note

Ref.No	Part No.	Part Name	Application date	Interchangeability	Hardware	Q'ty	Remarks
H-3-1	EP-000141-00	Upper Thread Hook Motor Unit				1	
H-3-2	GP-015086-00	MOTOR BASE				1	
H-3-3	06025MC-7113	Hex.Socket Bolt(M6*L25)			O	4	
H-3-4	16014SW-4115	Spring Washer (@6)			O	4	
H-3-5	08057SW-1111	Washer (@6)			O	4	
H-3-6	03003300H000	Cam Shaft Fixing Block				1	
H-3-7	05008MC-4517	Hex.Socket Bolt(M5*L8)			O	2	
H-3-8	GP-005184-00	Sensor Sensing Adjusting Ring	Oct,14,04 ~ May,18,05	X		1	
	GP-005184-01		May,19,05 ~	△			
H-3-9	04014SC-4517	Hex.Socket Set Screw(M5*L5)			O	2	
H-3-10	03003500H000	Motor Driving Cam Shaft				1	
H-3-11	03003910H000	Upper Thread Driving Plate				1	
H-3-12	18047SC-7113	Hex/ Socket Bolt (M5*L15)			O	2	
H-3-13	18048SW-3115	Spring Washer (5@)			O	2	
H-3-14	18049SW-3111	Washer (@5)			O	2	
H-3-15	03004100H000	Driving Plate Block				1	
H-3-16	03003810H000	Stud Bolt For Driving Plate				1	
H-3-17	04032SN-A001	Hex. Nut (M8-No2)			O	1	
H-3-18	15095SW-3115	Spring Washer (@8)			O	1	
H-3-19	WS-000549-00	Stud Bolt Washer	Feb,20,09 ~		O	1	
	WS-000549-01		Jun,24,09 ~				
H-3-20	GP-044787-00	MOTOR DRIVING CONNECT PLATE	Jan,13,09 ~	X		1	
H-3-21	03008300H000	Connecting Plate Stud Screw A				1	
H-3-22	03004500H000	Connecting Plate Pin Washer				1	
H-3-23	03004400H000	Motor Driving Connect Bearing				2	
H-3-24	03004800H000	Connecting Plate Knuckle				1	
H-3-25	SC-001605-00	Connecting Plate Stud Screw	Jan,13,09 ~	X		1	
H-3-26	16014SW-4115	SPRING WASHER (@6)			O	1	
H-3-27	13042SN-1111	Hex.Nut (M6*T5-R)			O	1	
H-3-28	04032SN-A001	Hex. Nut (M8-No2)			O	1	
H-3-29	03002610H000	Return Spring Stopper				8	
H-3-30	05008SC-4113	Hex.Socket Bolt (M4*L16)			O	8	
H-3-31	03002700H000	Return Spring				4	
H-3-32	03002800H000	Return Spring Stopper Washer				4	
H-3-33	03003000H000	Return Spring Fix Pin				4	
H-3-34	02015SC-7113	Hex.Socket Bolt(M4*L10)			O	4	
H-3-35	03002900H000	Return Spring Fix Pin Washer				4	
H-3-36	03007000UK60	Upper Thread Driving Shaft A (L1400) @8				1	
	GP-026938-00	Upper Thread Driving Shaft B (L1435) @8	Feb,22,07 ~ Jun,08,07			1	
	GP-026938-01		Jun,09,07 ~				
H-3-37	GP-015085-00	UPPER THREAD HOOK SENSOR BASE				1	
H-3-38	07035SC-7113	BRACKET SCREW (M3*L6)			O	2	
H-3-39	15-027A-2070	SENSOR				1	
H-3-40	13061SC-8119	Plus Screw (M3*L10)			O	1	
H-3-41	12001900U000	Upper Thread Hook Motor Cover				1	

H

H-3

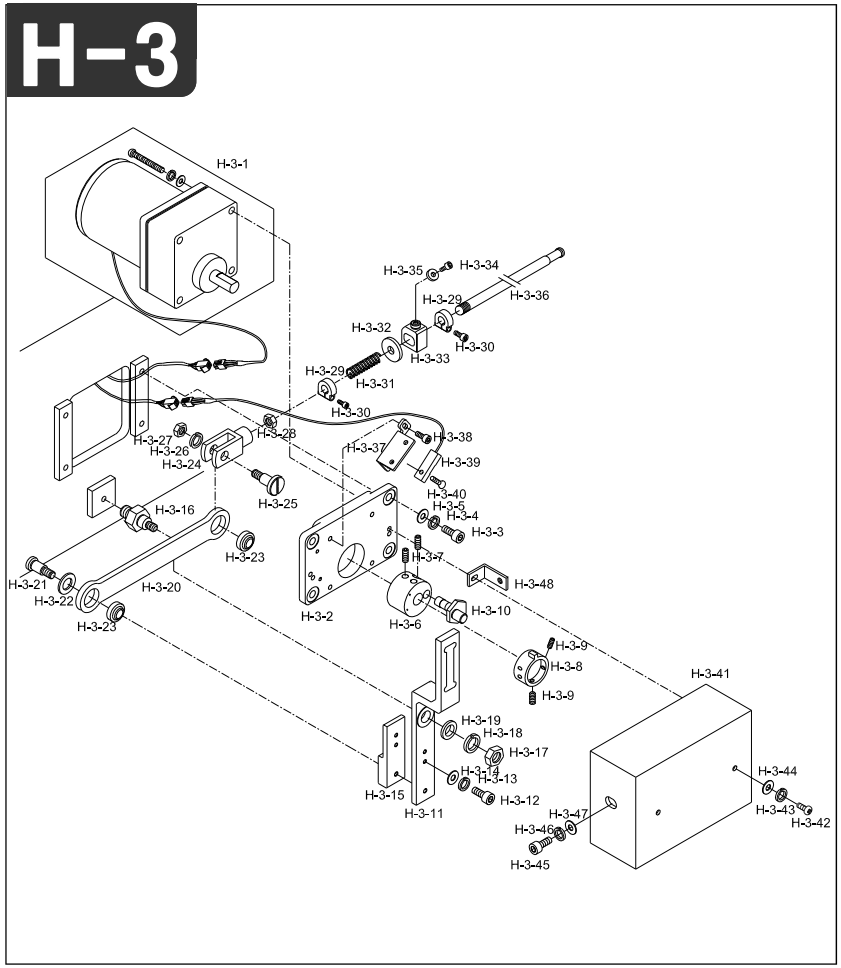

Note

Ref.No	Part No.	Part Name	Application date	Interchangeability	Hardware	Q'ty	Remarks
H-3-42	02023SC-7113	Hex. Socket Bolt (M4*L8)			O	2	
H-3-43	18014SW-3115	SPRING WASHER (@4-NO2)			O	1	
H-3-44	18015SW-3111	WASHER (4@)			O	1	
H-3-45	02023SC-7113	Hex.Socket Bolt (M4*L8)			O	2	
H-3-46	18014SW-3115	Spring Washer (@4-No2)			O	2	
H-3-47	18015SW-3111	Washer (4@)			O	2	
H-3-48	03008600H000	Motor Cover Fixing Bracket				2	

H

H-4

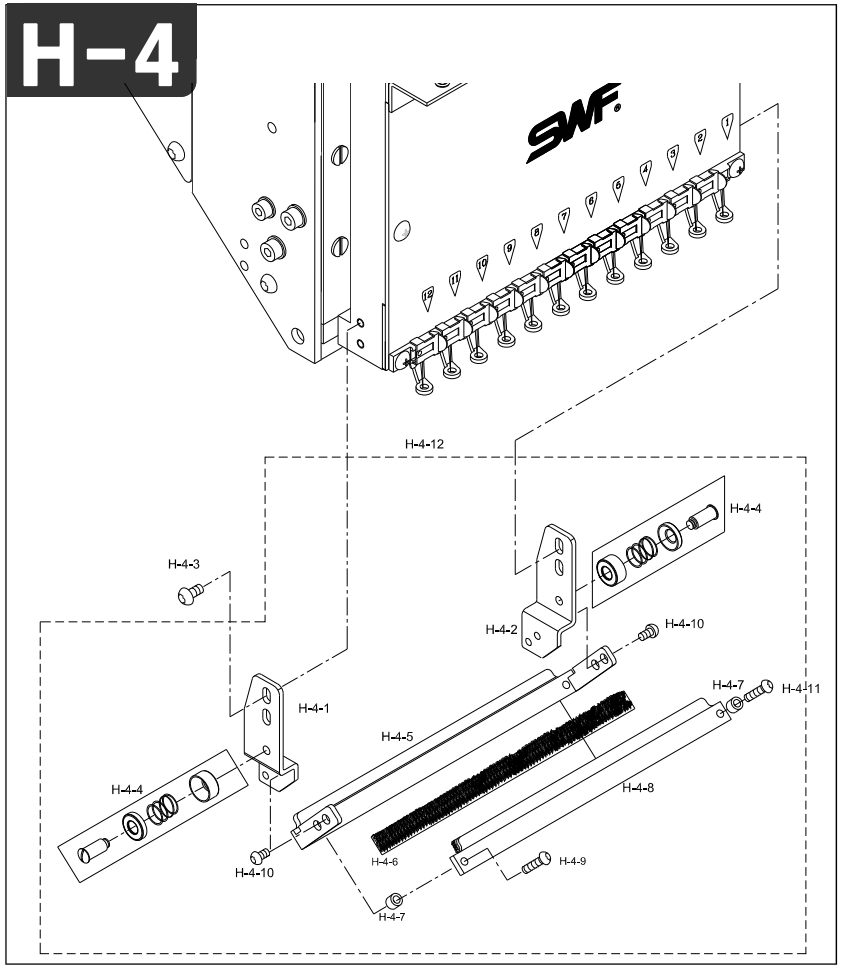

Note

Ref.No	Part No.	Part Name	Application date	Interchangeability	Hardware	Q'ty	Remarks
H-4-1	09040PR-A001	Bracket (L)				4	
H-4-2	09041PR-A001	Bracket (R)				4	
H-4-3	02009SC-A001	Side Cover Screw				16	
H-4-4	09044PR-A001	Upper Thread Holder Disk Set				8	
H-4-5	09052PR-T151	Upper Thread Presser Base				4	
H-4-6	09027ET-T151	Velcro				4	
H-4-7	09038CW-A001	Thread Presser Space				8	
H-4-8	09029PR-T151	Presser Base Cover				4	
H-4-9	07018SC-8118	Plus Screw (M3*L8)			O	8	
H-4-10	06010SC-8118	Plus Screw (M3*L4)			O	16	
H-4-11	06025MC-7113	Hex.Socket Bolt(M6*L25)			O	4	
H-4-12	08600005B000	Upper Thread Presser Base Assy				6	

H

H-5

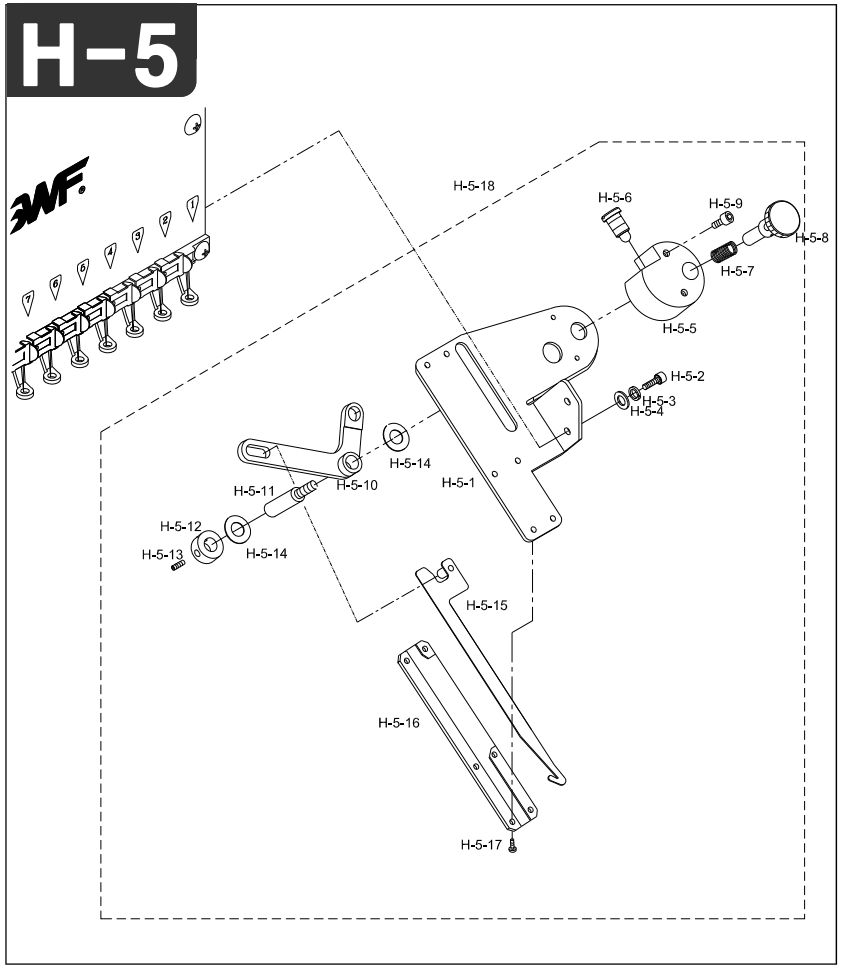

Ref.No	Part No.	Part Name	Application date	Interchangeability	Hardware	Q'ty	Remarks
H-5-1	03500110H000	Upper Thread Catcher Base				4	
H-5-2	02023SC-7113	Hex.Socket Bolt (M4*L8)			O	8	
H-5-3	18014SW-3115	Spring Washer (@4-No2)			O	8	
H-5-4	18015SW-3111	Washer (4@)			O	8	
H-5-5	03500900H000	Clutch Block				4	
H-5-6	03501000H000	Clutch Stud Screw				4	
H-5-7	03501100H000	Clutch Spring				4	
H-5-8	03501200H000	Clutch Dial				4	
H-5-9	11029SC-4113	Hex. Socket Bolt (M4*L20)			O	8	
H-5-10	03500500H000	Upper Catcher Driving Lever				4	
H-5-11	03500600H000	Driving Lever Pin				4	
H-5-12	03500700H000	Driving Lever Pin Collar				4	
H-5-13	04014SC-4517	Hex.Socket Set Screw(M5*L5)				8	
H-5-14	03500800H000	Driving Lever Pin Washer				8	
H-5-15	03500330H000	Upper Thread Hook				4	
H-5-16	03500210H000	Upper Thread Hook Base Cover				4	
H-5-17	03005MC-3123	TRUSS SCREW (M3*L5)			O	24	
H-5-18	03500000DM60	Wiper Assy				6	

Note

Spool & Table

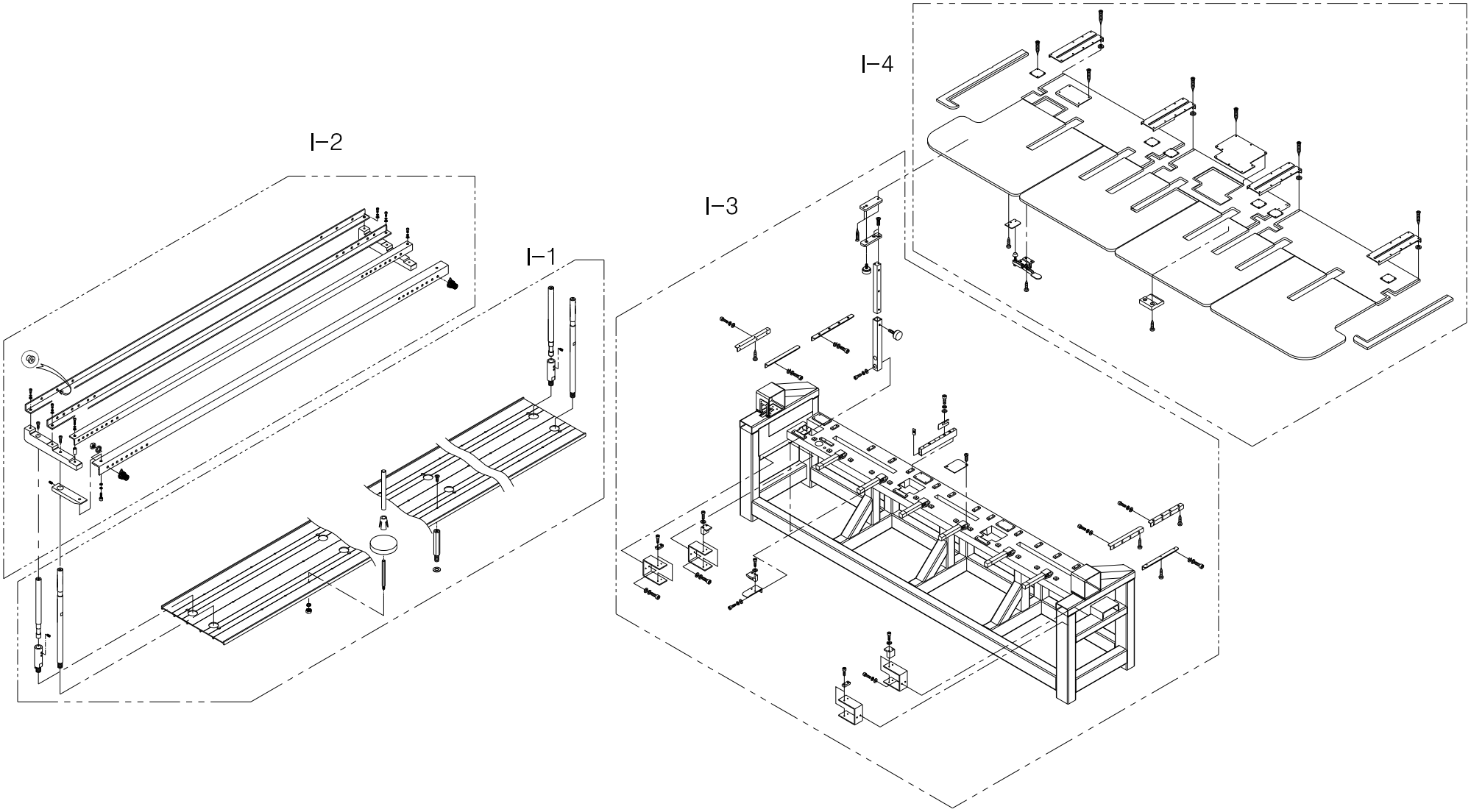

I-1

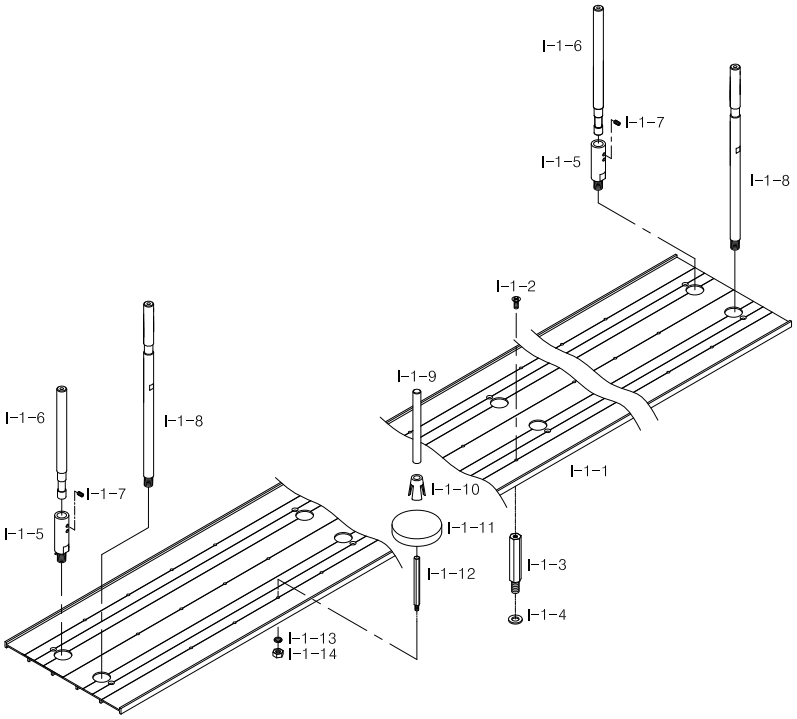

Note

Ref.No	Part No.	Part Name	Application date	Interchangeability	Hardware	Q'ty	Remarks
I-1-1	GP-025695-00	Spool Plate (1506)	Jan,19,07 ~ Sep,13,07	X		1	
	GP-025695-01		Sep,14,07 ~	△			
	GP-028136-00	Spool Plate (1206)	Mar,21,07 ~	X			
	GP-028136-01		Sep,14,07 ~	△			
	GP-028136-02		Oct,08,11 ~	△			
	GP-032220-00	Spool Plate (906)	Jul,04,07 ~ Sep,13,07	X			
	GP-032220-01		Sep,14,07 ~	△			
	GP-032225-00	Spool Plate (606)	Jul,04,07 ~ Sep,13,07	X			
	GP-032225-01		Sep,14,07 ~	△			
I-1-2	15089SC-7119	C.S Screw (M4*L10)			O	12	
I-1-3	12013SC-A001	Spool Plate Fixing Bolt (M8*L22)				12	
I-1-4	15077SW-2111	Washer (8@-S)			O	12	
I-1-5	01000500H000	Spool Stand Stud Bolt L113				4	
I-1-6	01001500T000	Spool Stand (L=380)				4	
I-1-7	04014SC-4517	Hex.Socket Set Screw(M5*L5)			O	10	
I-1-8	GP-032906-00	Spool Stand (L=410)				7	
I-1-9	10000100A000	Thread Guide L=200				30	
I-1-10	12012PM-A001	Spool Holder				120	
I-1-11	12052SF-A001	Spool Sponge				120	
I-1-12	GP-054029-00	Spool Post				120	
I-1-13	18048SW-3115	Spring Washer (@5)			O	120	
I-1-14	12010SN-1211	Hex.Nut (M5)			O	120	
I-1-15	10000000UK60	Spool Plate Assy				1	

I

I-2

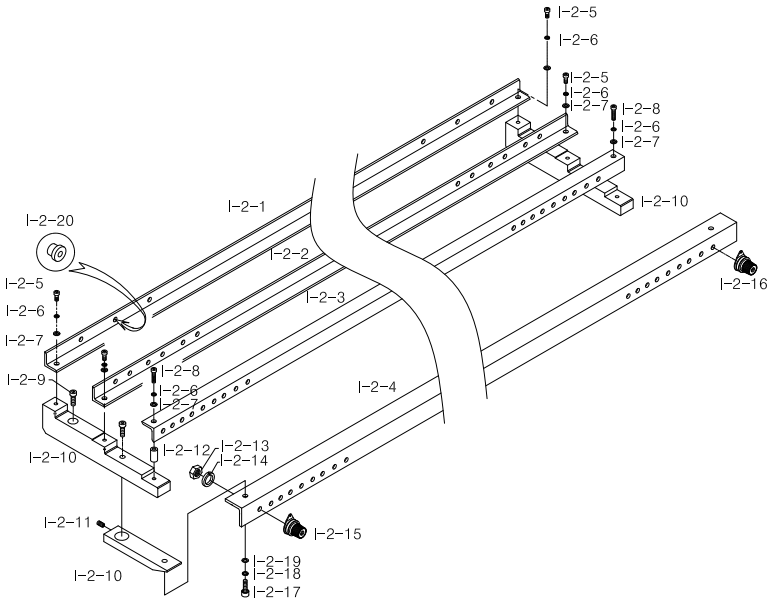

Note

Ref.No	Part No.	Part Name	Application date	Interchangeability	Hardware	Q'ty	Remarks
I-2-1	GP-005696-00	Angle "A" (1506)	Nov,18,04 ~ Feb,19,07	X		1	
	GP-005696-01		Feb,20,07 ~	△			
	GP-028131-00	Angle "A" (1206)	Mar,21,07 ~	X		1	
	GP-028131-01		Oct,08,11 ~	△			
	GP-032214-00	Angle "A" (906)				1	
	GP-032221-00	Angle "A" (606)				1	
I-2-2	GP-005697-00	Angle "B" (1506)	Nov,18,04 ~ Mar,25,08	X		1	
	GP-005697-01		Mar,26,08 ~	△			
	GP-028132-00	Angle "B" (1206)	Mar,21,07 ~	X		1	
	GP-028132-01		Oct,08,11 ~	△			
	GP-032217-00	Angle "B" (906)				1	
	GP-032222-00	Angle "B" (606)				1	
I-2-3	GP-005698-00	Angle "C" (1506)				1	
	GP-028133-00	Angle "C" (1206)	Mar,21,07 ~			1	
	GP-028133-01		Oct,08,11 ~				
	GP-032218-00	Angle "C" (906)				1	
	GP-032223-00	Angle "C" (606)				1	
I-2-4	GP-005699-00	Angle "D" (1506)	Nov,18,04 ~ Dec,27,05	X		1	
	GP-005699-01		Dec,28,05 ~	△		1	
	GP-028135-00	Angle "D" (1206)	Mar,21,07 ~			1	
	GP-028135-01		Oct,08,11 ~				
	GP-032219-00	Angle "D" (906)				1	
	GP-032224-00	Angle "D" (606)				1	
I-2-5	02015SC-7113	Hex.Socket Bolt(M4*L10)			O	12	
I-2-6	02028SW-9115	Spring Washer (@4)			O	18	
I-2-7	06003SW-2111	Washer (@4)			O	18	
I-2-8	05008SC-4113	Hex.Socket Bolt (M4*L16)			O	6	
I-2-9	03016SC-4113	Hex. Socket Bolt (M5*L15)			O	12	
I-2-10	10600210H000	Thread Angle Frame				6	
I-2-11	07009SC-4517	Hex.Socket Set Screw (M5*L6)			O	2	
I-2-12	10600700H000	Spacer				6	
I-2-13	03031SN-A001	Pin. Nut (11/64,N=40)				120	
I-2-14	18048SW-3115	Spring Washer (@5)			O	120	
I-2-15	10600110B000	Sud Tension Adjusting Set(New)				100	
I-2-16	10600210B000	Sub Tension Adjusting Set (black)				20	
I-2-17	02015SC-7113	Hex.Socket Bolt(M4*L10)			O	6	
I-2-18	02028SW-9115	Spring Washer (@4)			O	6	
I-2-19	06003SW-2111	Washer (@4)			O	6	
I-2-20	12042PM-A001	Eyelet				240	
I-2-21	20000000UK60	Angle Assy				1	

I

I-3

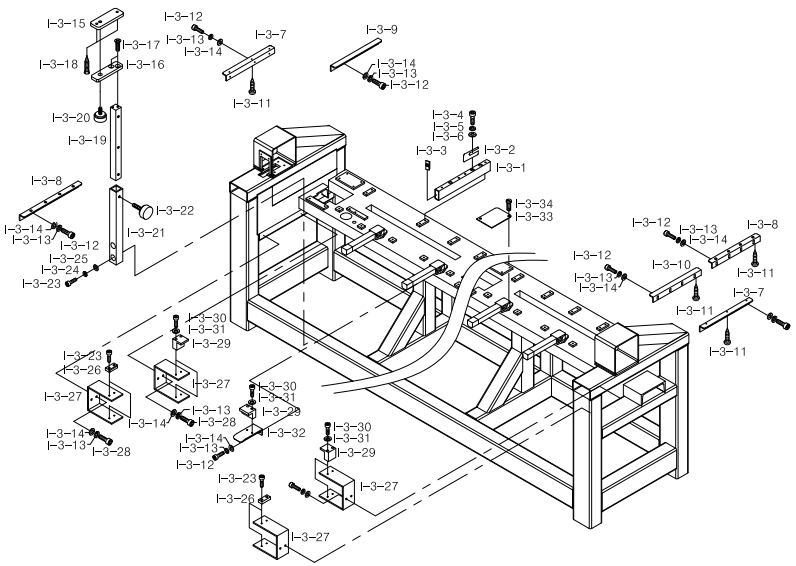

Note

Ref.No	Part No.	Part Name	Application date	Interchangeability	Hardware	Q'ty	Remarks
I-3-1	GP-029123-00	Support For Table "A"	Apr,18,07 ~ Apr,22,07	X		12	
	GP-029123-01		Apr,23,07 ~ Apr,25,07	△			
	GP-029123-02		Apr,26,07 ~	△			
I-3-2	05001700U000	Table Support Plate				46	
I-3-3	GP-003757-00	TABLE SUPPORT END CAP				24	
I-3-4	16009SC-4113	Hex.Socket Bolt(M10*L25)			O	30	
I-3-5	16029SW-3115	Spring Washer (10@)			O	30	
I-3-6	01007SW-1111	Washer (10@)			O	30	
I-3-7	GP-029245-00	TABLE Angle "A"				2	
I-3-8	GP-029246-00	TABLE Angle "B"				2	
I-3-9	GP-029247-00	TABLE Angle "C"	Apr,19,07 ~ May,21,07	X		1	
	GP-029247-01		May,22,07 ~	△			
I-3-10	GP-030586-00	TABLE Angle "D"				1	
I-3-11	16009SC-8330	Tapping Screw (M6*L20)			O	83	
I-3-12	03016SC-4113	HEX. SOCKET BOLT(M5*L15)			O	26	
I-3-13	18048SW-3115	Spring Washer (@5)			O	34	
I-3-14	16018SW-1111	Washer (@5)			O	34	
I-3-15	16061PR-UK01	Table Support Plate (A)				4	
I-3-16	16058AD-UK01	Table Support Plate (B)				4	
I-3-17	15089SC-7119	C.S Screw (M4*L12)			O	8	
	08101SC-8329	Tapping Screw (M3*L16)			O	8	
I-3-18	GP-030270-00	Table Support Square Bar L=283				4	
I-3-20	17062SC-UK01	Table Support Stopper Screw				4	
I-3-21	GP-030271-00	Table Support Square Bar Guide				4	
I-3-22	17063SC-UK01	TABLE SUPPORT STOPPER SCREW				4	
I-3-23	02015SC-7113	Hex.Socket Bolt(M4*L10)			O	8	
I-3-24	02028SW-9115	Spring Washer (@4)			O	8	
I-3-25	05009SW-1111	Washer (@4-L)			O	8	
I-3-26	17085PM-UK01	Positioning Block				4	
I-3-27	GP-029122-00	Table Fixing Plate	Apr,19,07 ~ May,23,07	X		4	
	GP-029122-01		May,24,07 ~	△			
I-3-28	08076SC-7113	HEX. SOCKET BOLT(M5*L12)			O	8	
I-3-29	05008100UK40	Table Fixing Block				7	
I-3-30	04030MC-4113	HEX.SOCKET BOLT(M4*L30)			O	14	
I-3-31	18015SW-3111	WASHER(4@)			O	14	
I-3-32	17073PR-UK01	Table Support Angle "F"				3	
I-3-33	GP-028932-00	Gear Cover				6	
I-3-34	02030SC-T121	Bed Cover Screw(9/64" 40)				14	

I-4

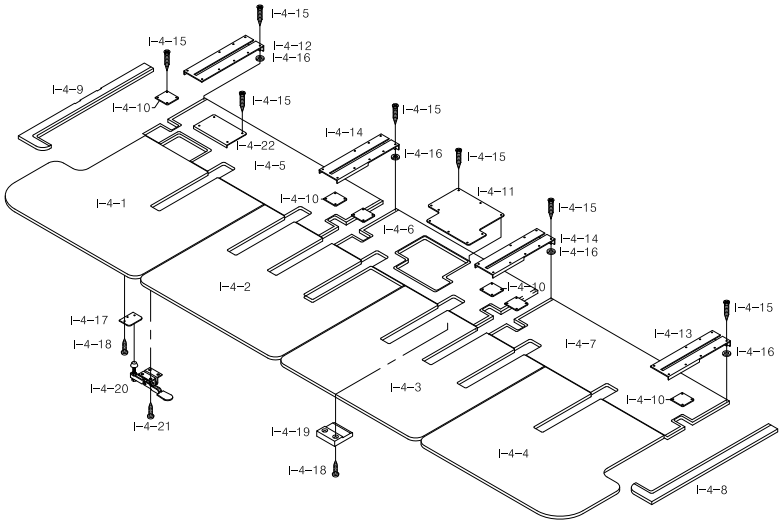

Note

Ref.No	Part No.	Part Name	Application date	Interchangeability	Hardware	Q'ty	Remarks
I-4-1	GP-028971-00	Table "A"				1	
I-4-2	GP-028972-00	Table "B"				1	
I-4-3	GP-028973-00	Table "C"				1	
I-4-4	GP-028974-00	Table "D"				1	
I-4-5	GP-028968-00	Fixed Table "A"	Apr,16,07 ~ May,24,07	X		1	
	GP-028968-01		May,25,07	△			
I-4-6	GP-028969-00	Fixed Table "B"	Apr,16,07 ~ May,16,07	X		1	
	GP-028969-01		May,17,07 ~ May,17,07	△			
	GP-028969-02		May,17,07 ~ May,21,07	△			
	GP-028969-03		May,22,07 ~ Aug,29,07	△			
	GP-028969-04		Aug,30,07 ~	△			
I-4-7	GP-028970-00	FIXED TABLE "C"	Apr,16,07 ~ May,24,07	X		1	
	GP-028970-01		May,25,07	△			
I-4-8	GP-029004-00	Fixed Table "R"	Apr,16,07 ~ Apr,18,07	X		1	
	GP-029004-01		Apr,19,07 ~ Jun,07,07	△			
	GP-029004-02		Jun,08,07 ~ May,29,08	△			
	GP-029004-03		May,30,08 ~	△			
I-4-9	GP-029005-00	Fixed Table "L"	Apr,16,07 ~ Apr,19,07	X		1	
	GP-029005-01		Apr,20,07 ~	△			
I-4-10	GP-029008-00	Y-Driving Shaft Coupling Cover	Apr,16,07 ~ Dec,09,08	X		2	
	GP-029008-01		Dec,10,08 ~	△			
I-4-11	GP-030252-00	Y-Motor Table Cover	May,11,07 ~ May,16,07	X		1	
	GP-030252-01		May,17,07 ~ May,21,07	△			
	GP-030252-02		May,22,07 ~	△			
I-4-12	GP-029006-00	Table Connecting Cover "A"	Apr,16,07 ~ Apr,27,07	X		1	
	GP-029006-01		Apr,28,07 ~ Jun,19,07	△			
	GP-029006-02		Jun,20,07 ~ Nov,01,07	△			
	GP-029006-03		Nov,02,07 ~ May,29,08	△			
	GP-029006-04		May,30,08 ~	△			
I-4-13	GP-029007-00	Table Connecting Cover "B"	Apr,16,07 ~ Apr,18,07	X		1	
	GP-029007-01		Apr,19,07 ~ Apr,27,07	△			
	GP-029007-02		Apr,28,07 ~ Jun,19,07	△			
	GP-029007-03		Jun,20,07 ~ Nov,01,07	△			
	GP-029007-04		Nov,02,07 ~ May,29,08	△			
	GP-029007-05		May,30,08 ~	△			
I-4-14	GP-029080-00	Table Connecting Cover "C"	Apr,17,07 ~ Apr,27,07	X		2	
	GP-029080-01		Apr,28,07 ~ Jun,19,07	△			
	GP-029080-02		Jun,20,07 ~ Nov,01,07	△			
	GP-029080-03		Nov,02,07 ~ May,29,08	△			
	GP-029080-04		May,30,08 ~	△			
I-4-15	08101SC-8329	Tapping Screw (M3*L16)			O	44	
I-4-16	10000310A000	Washer T=0.3,0.5,0.8,1.2,1.6				54	
I-4-17	16065PR-UK01	Clamp Plate				6	
I-4-18	16009SC-8330	Tapping Screw (M6*L20)			O	83	
I-4-19	GP-019154-00	Table Holding Block				12	

I-4

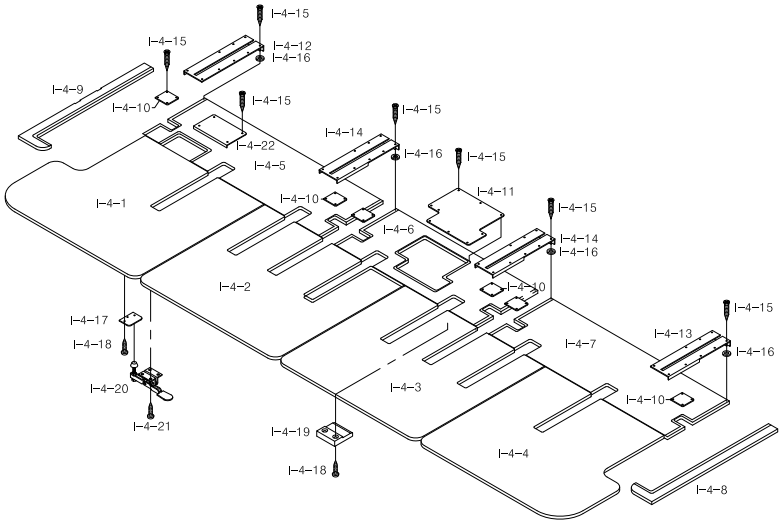

Note

Ref.No	Part No.	Part Name	Application date	Interchangeability	Hardware	Q'ty	Remarks
I-4-20	16067ET-UK01	Table Toggle Clamp				10	
I-4-21	19002SC-1330	Tapping Screw (4*L16-No1)			O	40	
I-4-22	GP-029010-00	Mes Cam Driving Box Cover	Apr,17,07 ~	X		1	
	GP-029010-01		May,18,10 ~	△			

X-Axis

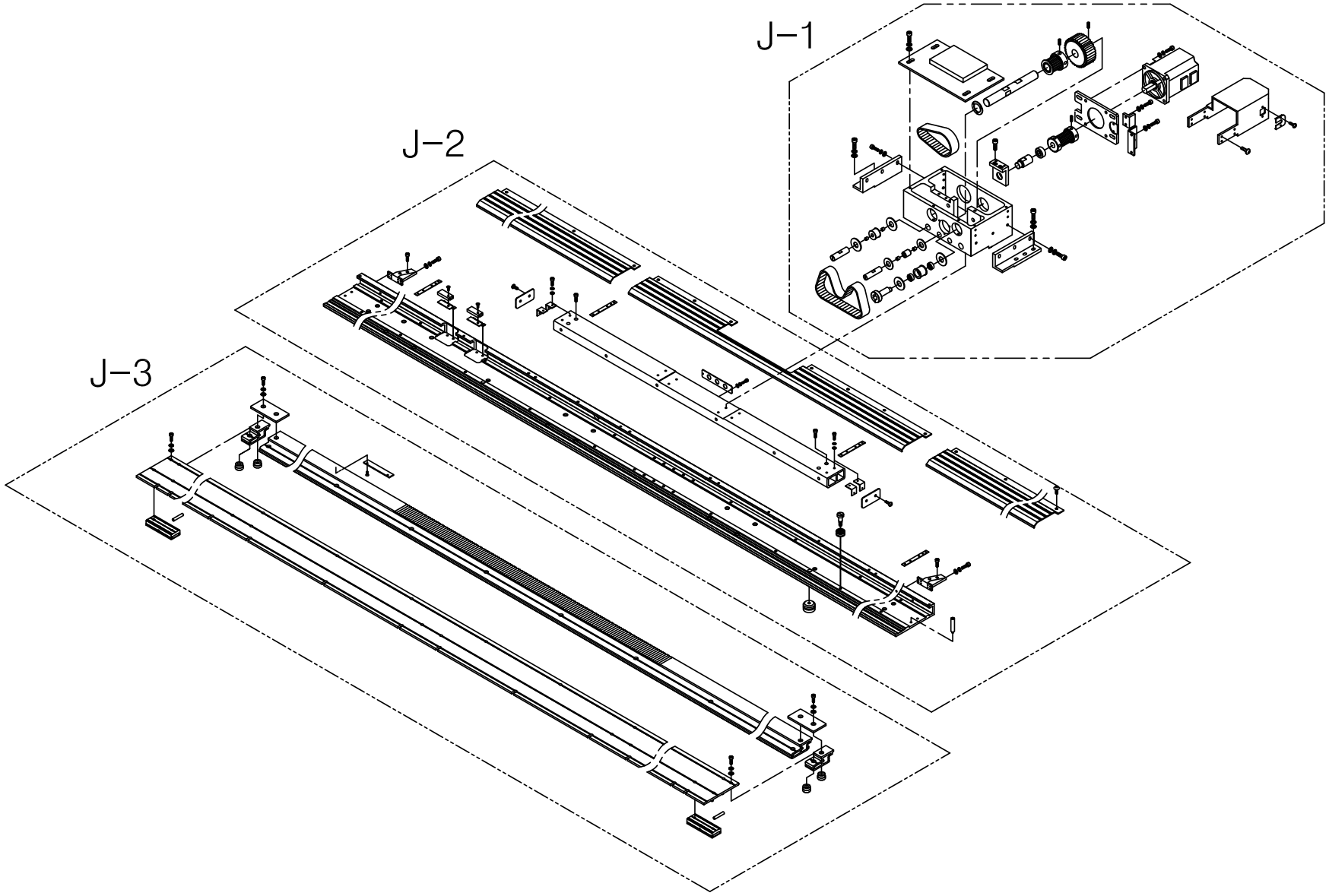

J-1

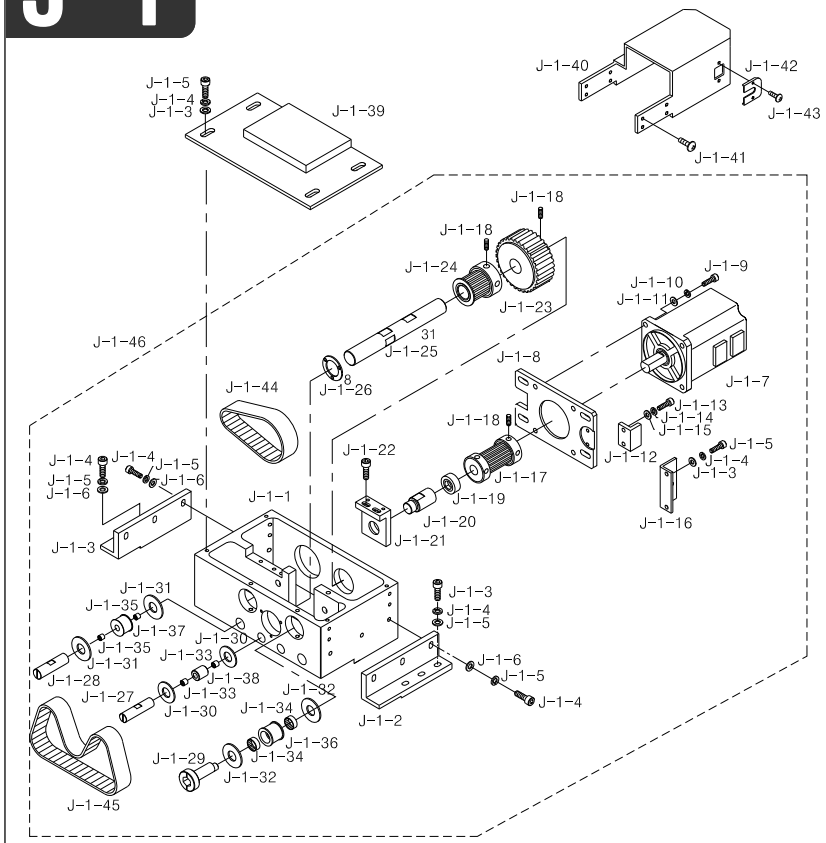

Note

eRef.No	Part No.	Part Name	Application date	Interchangeability	Hardware	Q'ty	Remarks
J-1-1	GP-037337-00	X-DRIVING BOX				1	
J-1-2	GP-037338-00	X-DRIVING BOX Fixing Bracket A				1	
J-1-3	GP-037339-00	X-DRIVING BOX Fixing Bracket B				1	
J-1-4	14014SC-4113	Socket Bolt (M5*L8)			O	16	
J-1-5	08070SW-9115	Spring Washer (@5)			O	20	
J-1-6	18049SW-3111	Washer (@5)			O	20	
J-1-7	EP-000125-00	X-MOTOR(750W)				1	
J-1-8	GP-027828-00	Motor Plate	Mar,14,07 ~ May,17,07	X		1	
	GP-027828-01		May,18,07 ~ May,30,07	△			
	GP-027828-02		May,31,07 ~ Jan,06,08	△			
	GP-027828-03		Jan,07,08 ~ Nov,13,08	△			
	GP-027828-04		Nov,14,08 ~	△			
J-1-10	08070SW-9115	Spring Washer (@5)			O	20	
J-1-11	18049SW-3111	Washer (@5)			O	20	
J-1-12	GP-027497-00	X-Tension Adjusting Sub Block				1	
J-1-13	07016SC-4113	Socket Bolt (M4*L10)			O	18	
J-1-14	18014SW-3115	Spring Washer (@4)			O	18	
J-1-15	18015SW-3111	Washer (@4)			O	18	
J-1-16	GP-027496-00	X-Tension Adjusting Block				1	
J-1-17	GP-027846-00	X-Motor Timing Pulley	Mar,14,07 ~ Aug,31,07	X		1	
	GP-027846-01		Aug,31,07 ~ Sep,17,07	△			
	GP-027846-02		Sep,18,07 ~ Jun,29,08	△			
	GP-027846-03		Jun,30,08 ~	△			
J-1-18	06060MC-4517	Bolt (M6*L6)			O	9	
J-1-19	BR-000234-00	Bearing (NA4902)	Aug,25,07 ~ Aug,30,07	X	O	1	
	BR-000234-01		Aug,31,07 ~	△	O		
J-1-20	GP-033354-00	Motor Connecting Shaft				1	
J-1-21	GP-033351-00	X-Motor Connecting Bracket	Aug,22,07 ~ Jan,06,08	X		1	
	GP-033351-01		Jan,07,08 ~	△			
J-1-22	02004SC-4113	Hex. Socket Bolt (M4*L8)			O	2	
J-1-23	GP-029836-00	X-Timing Pulley	May,02,07 ~ May,13,07	X		1	
	GP-029836-01		May,14,07 ~ Aug,30,07	△			
	GP-029836-02		Aug,31,07 ~	△			
J-1-24	GP-024677-00	X-Driving Timing Pulley	Dec,19,06 ~ Aug,30,07	X		1	
	GP-024677-01		Aug,31,07 ~	△			
J-1-25	GP-025927-00	X-DRIVING SHAFT	Jan,25,07 ~ May,13,07	X		1	
	GP-025927-01		May,14,07 ~ May,30,07	△			
	GP-025927-02		May,31,07 ~ Aug,30,07	△			
	GP-025927-03		Aug,31,07 ~ Oct,28,08	△			
	GP-025927-04		Oct,29,08 ~	△			
J-1-26	GP-024530-00	Bearing Cover				1	
J-1-27	PN-000375-00	X-Idler Pin A	Dec,09,06 ~ Aug,08,07	X		2	
	PN-000375-01		Aug,09,07 ~ Aug,30,07	△			
	PN-000375-02		Aug,31,07 ~	△			
J-1-28	PN-000376-00	X-Idler Pin B	Dec,09,06 ~ Aug,08,07	X		2	

J-1

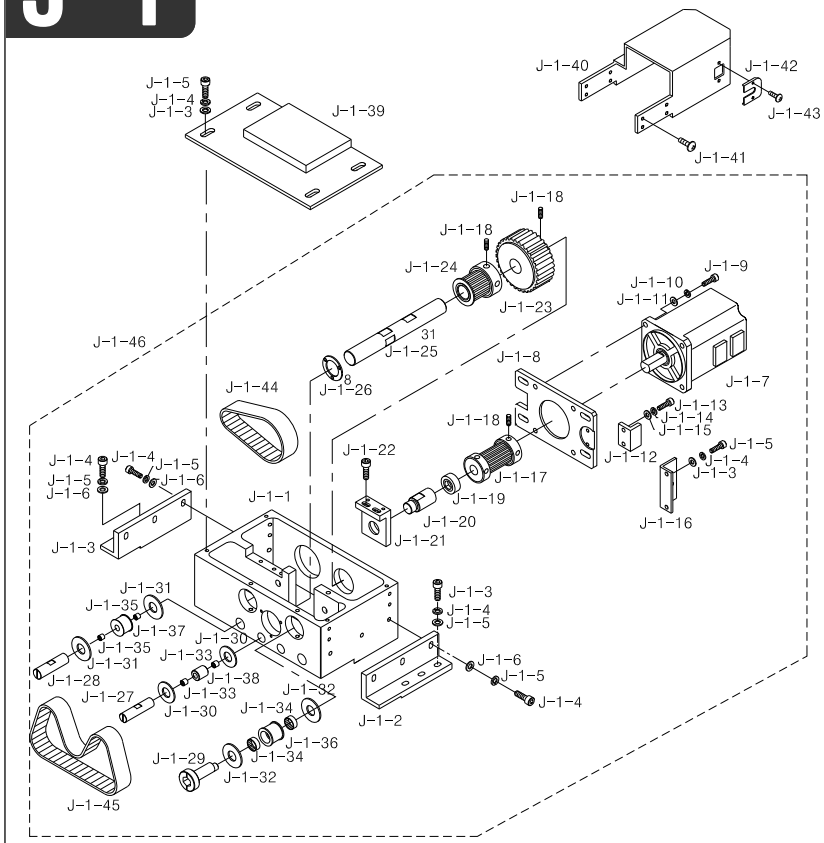

Note

Ref.No	Part No.	Part Name	Application date	Interchangeability	Hardware	Q'ty	Remarks
J-1-28	PN-000376-01		Aug,09,07 ~ Aug,30,07	△		2	
	PN-000376-02		Aug,31,07 ~	△			
J-1-29	PN-000434-00	Eccentric Pin A for Idler	Mar,08,07 ~ May,07,07	X		2	
	PN-000434-01		May,08,07 ~ Aug,08,07	△			
	PN-000434-02		Aug,09,07 ~ Aug,30,07	△			
	PN-000434-03		Aug,31,07 ~ Oct,04,07	△			
	PN-000434-04		Oct,05,07 ~	△			
J-1-30	07024BR-UK01	Fiber Washer(@8)				4	
J-1-31	WS-000293-00	Fiber Washer(@10)				4	
J-1-32	WS-000370-00	Fiber Washer(@12)				4	
J-1-33	BR-000121-00	Needle Bearing (IKO TLA1510Z)				4	
J-1-34	12018BR-T121	Needle Bearing (IKO TLA1010Z)				4	
J-1-35	GP-029656-00	X-Driving Connecting Bracket				2	
J-1-36	GP-027487-00	X-Idler A	Mar,08,07 ~ Aug,30,07	X		2	
	GP-027487-01		Aug,31,07 ~ Sep,11,07	△			
	GP-027487-02		Sep,12,07 ~ Dec,17,08	△			
	GP-027487-03		Dec,18,08 ~	△			
J-1-37	GP-027488-00	X-Idler B	Mar,08,07 ~ Aug,30,07	X		2	
	GP-027488-01		Aug,31,07 ~ Dec,17,08	△			
	GP-027488-02		Dec,18,08 ~	△			
J-1-38	GP-024109-00	X-Idler C	Dec,09,06 ~ Aug,30,07	X		2	
	GP-024109-01		Aug,31,07 ~	△			
J-1-39	GP-027499-00	X-DRIVING BOX Cover A	Mar,08,07 ~ May,03,07	X		1	
	GP-027499-01		May,04,07 ~ Aug,30,07	△			
	GP-027499-02		Aug,31,07 ~	△			
J-1-40	GP-029197-00	X-DRIVING BOX Cover B	Apr,19,07 ~ Aug,30,08	X		1	
	GP-029197-01		Aug,31,08 ~	△			
J-1-41	02044SC-3123	Truss Bolt (M5*L8)				8	
J-1-42	GP-026927-00	Cable Clamp				1	
J-1-43	18153SC-3123	Truss Bolt (M4*L10)				2	
J-1-44	BE-000139-00	X-Motor Main Belt	May,02,07 ~ Aug,30,08	X		1	
	BE-000139-01		Aug,31,08 ~	△			
J-1-45	BE-000094-00	X-Driving Box Belt	Dec,09,06 ~ Aug,30,08	X		1	
	BE-000094-01		Aug,31,08 ~	△			
J-1-46	AS-007448-00	X-Belt Box Assy	Sep,06,07 ~	X		1	
	AS-007448-01		Mar,04,08 ~	△			
	AS-007448-02		Feb,21,09 ~	△			

J

J-2

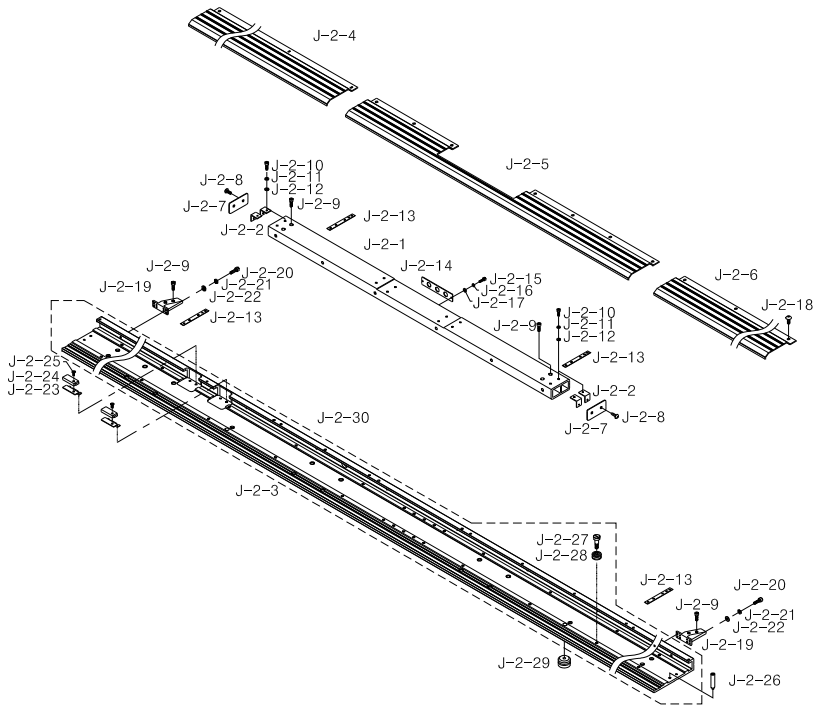

Note

Ref.No	Part No.	Part Name	Application date	Interchangeability	Hardware	Q'ty	Remarks
J-2-1	GP-029675-00	X- Motor Bracket	Apr,30,07 ~ Jun,11,08	X		1	
	GP-029675-01		Jun,12,08 ~	△			
J-2-2	GP-029842-00	Side Cover Plate Of X-Motor Bracket				4	
J-2-3	GP-029112-00	X-Frame	Apr,18,07 ~ Apr,30,07	X		1	
	GP-029112-01		Apr,31,07 ~	△			
J-2-4	GP-029089-00	X-Frame Cover A	Apr,17,07 ~ May,01,07	X		1	
	GP-029089-01		May,02,07 ~	△			
J-2-5	GP-029090-00	X-Frame Cover B	Apr,17,07 ~ May,01,07	X		1	
	GP-029090-01		May,02,07 ~	△			
J-2-6	GP-029091-00	X-Frame Cover C	Apr,17,07 ~ May,01,07	X		1	
	GP-029091-01		May,02,07 ~	△			
J-2-7	GP-029841-00	X- Side Cover of X-motor Bracket				2	
J-2-8	13054SC-3123	Truss Bolt (M3*L8)			O	4	
J-2-9	02031SC-4113	Socket Bolt (M5*L10)			O	8	
J-2-10	22006SC-7113	Socket Bolt (M3*L8)			O	3	
J-2-11	11019SW-9115	Spring Washer (@3)			O	3	
J-2-12	06011SW-2111	Washer (@3)			O	3	
J-2-13	GP-029125-00	X-Frame Spacer	Apr,18,07 ~ May,10,07	X		4	
	GP-029125-01		May,11,07 ~	△			
J-2-14	03201400UK40	Cable Bushing Fixed Plate				1	
J-2-15	02014SC-4113	Socket Bolt (M4*L5)			O	2	
J-2-16	18014SW-3115	Spring Washer (@4)			O	18	
J-2-17	18015SW-3111	Washer (@4)			O	18	
J-2-18	18048SC-7113	Truss Bolt (M5*L12)			O	22	
J-2-19	GP-029656-00	X-Driving Connecting Bracket				2	
J-2-20	14014SC-4113	Socket Bolt (M5*L8)			O	16	
J-2-21	08070SW-9115	Spring Washer (@5)			O	20	
J-2-22	18049SW-3111	Washer (@5)			O	20	
J-2-23	GP-025932-00	X-Sensor Plate				2	
J-2-24	EP-000067-00	Sensor(TL-W3MC1)				2	
J-2-25	02023SC-7113	Screw (M4*L8)			O	4	
J-2-26	GP-025953-00	X-Frame Cover Stud	Jan,25,07 ~ May,30,07	X		2	
	GP-025953-01		May,31,07 ~	△			
J-2-27	16002CW-B001	Cam Roller Bolt				52	
J-2-28	15001BR-B001	Cam Roller Bearing (LFR50/5KDD4)				52	
J-2-29	SN-000139-00	Cap Frame Bushing Nut				24	
J-2-30	AS-014987-00	X-Frame Assy	Sep,09,08 ~	X		1	

J

J-3

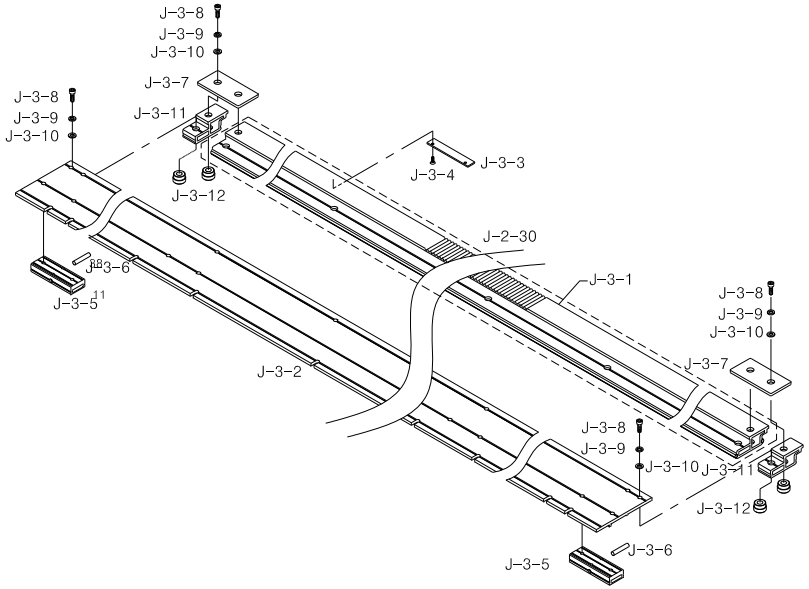

Note

Ref.No	Part No.	Part Name	Application date	Interchangeability	Hardware	Q'ty	Remarks
J-3-1	GP-034453-00	X-Slide Frame	Oct,12,07 ~ Oct,16,07	X		1	
	GP-034453-01		Oct,17,07 ~	△			
J-3-2	GP-035334-00	Connecting Frame	Nov,06,07 ~ Jul,21,08	X		1	
	GP-035334-01		Jul,22,08 ~	△			
J-3-3	GP-034451-00	X-Perception Sensor Plate				1	
J-3-4	02023SC-7113	Screw (M4*L8)			O	2	
J-3-5	GP-025879-00	Support For Connect Frame	Jan,25,07 ~ Jun,26,07	X		7	
	GP-025879-01		Jun,27,07 ~	△			
J-3-6	PN-000438-00	X-Support for Connect Frame Pin				7	
J-3-7	GP-035335-00	X-Slide Frame Connecting Bracket	Nov,06,07 ~ Nov,10,08	X		2	
	GP-035335-01		Nov,11,08 ~	△			
J-3-8	07016SC-4113	Socket Bolt (M4*L10)			O	18	
J-3-9	18014SW-3115	Spring Washer (@4)			O	18	
J-3-10	18015SW-3111	Washer (@4)			O	18	
J-3-11	GP-035333-00	X-Support Slide Frame A				2	
J-3-12	SN-000122-00	X-Slide Frame Bushing Nut				16	

J

Con Box & OP Box

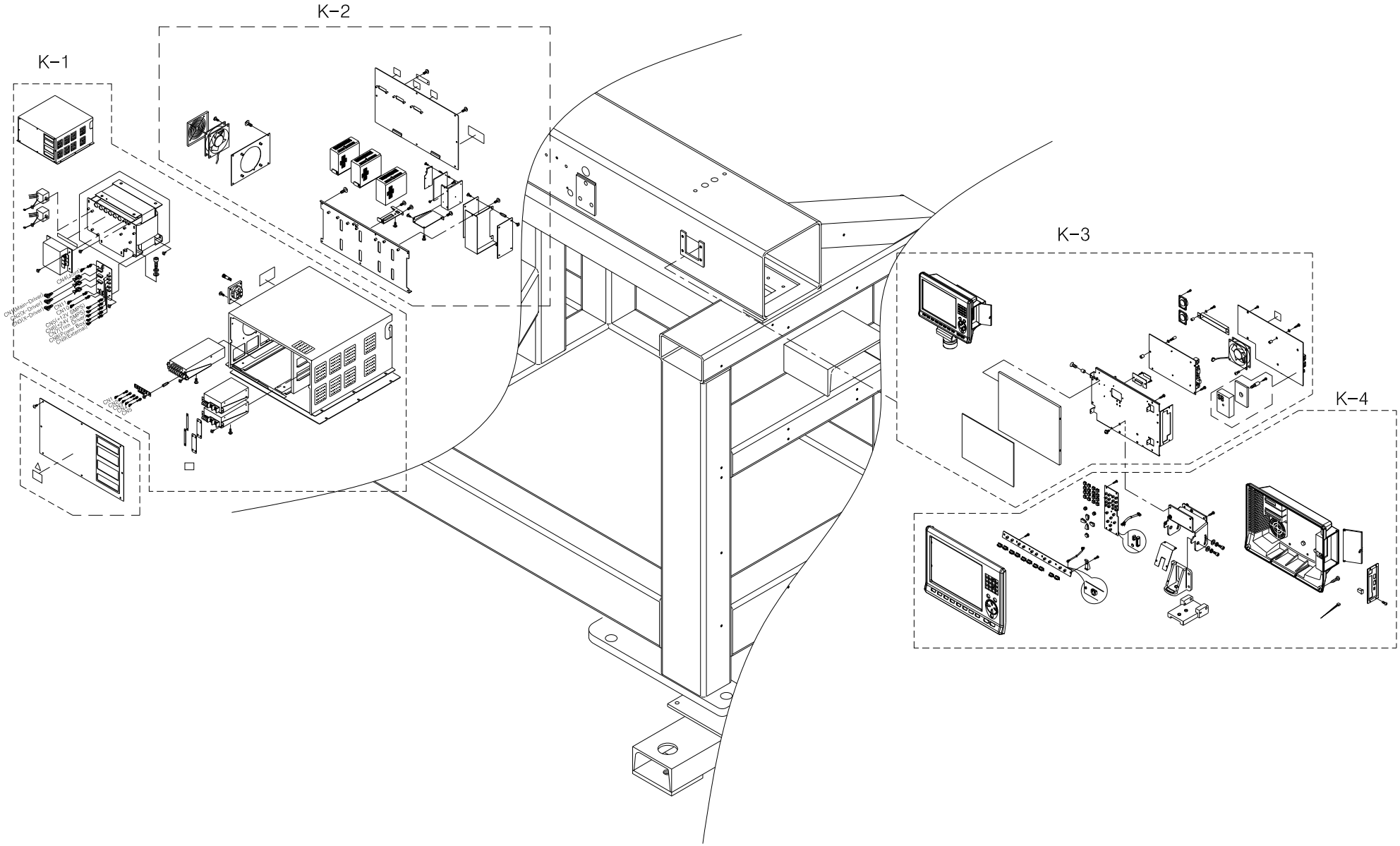

K-1

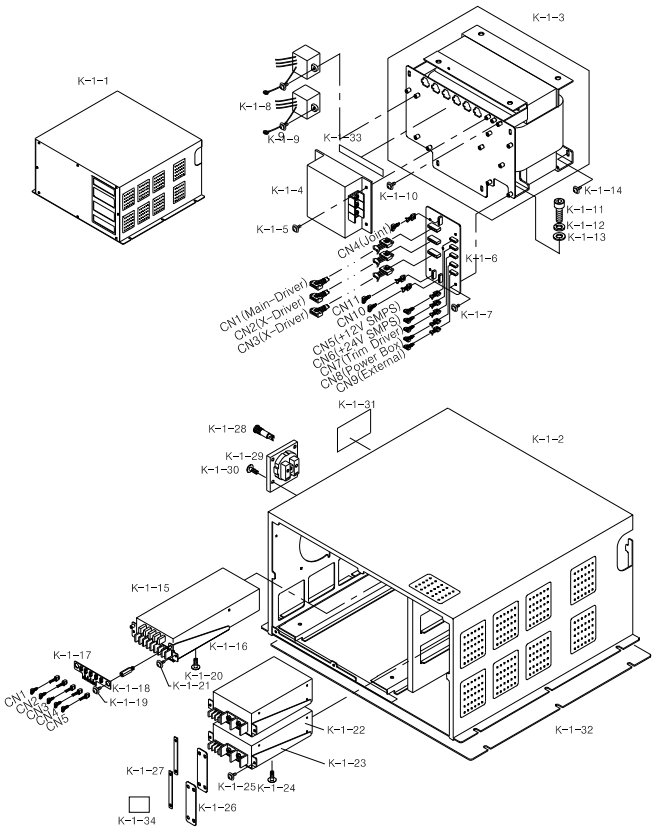

Note

Ref.No	Part No.	Part Name	Application date	Interchangeability	Hardware	Q'ty	Remarks
K-1-1	SWF-00000364	Control Box Ass'y				1	
K-1-2	GP-013744-02	Conrtol Box				1	
K-1-3	AS-004284-00	Transformer Ass'y(Set)				1	
K-1-4	EP-000047-00	Noise Filter				1	
K-1-5	07-004S-SM5S	Fixing Screw Noise Filter(Set)				4	
K-1-6	BD-000242-00	Connect Board				1	
K-1-7	07-004S-SM5S	Fixing Screw For Connect Board(Set)				4	
K-1-8	BD-000168-00	Surge Protector				2	
K-1-9	07-004S-SM5S	Fixing Screw for Surge Protector(Set)				2	
K-1-10	07-004S-SM5S	Ground Screw for Connect Plate(Set)				4	
K-1-11	10-016M-SW66	Fixing Screw for Transformer A				4	
K-1-12	10-003S-SW66	Spring Washer				4	
K-1-13	10-004S-SW66	Washer				4	
K-1-14	SC-000393-00	Fixing Screw for Transformer B				4	
K-1-15	GP-007472-00	Digital SMPS				1	
K-1-16	GP-013749-00	SMPS Bracket(A)				1	
K-1-17	BD-000243-00	SMPS Connect Board				1	
K-1-18	GP-010736-00	Stud for SMPS Connect Board				2	
K-1-19	07-004S-SM5S	Fixing Screw for SMPS Connect Board(Set)				2	
K-1-20	07-004S-SM5S	Fixing Screw for Digital SMPS(Set)				3	
K-1-21	07-004S-SM5S	Fixing Screw for SMPS Bracket(A)(Set)				2	
K-1-22	EP-000015-00	24V SMPS				2	
K-1-23	GP-009435-01	SMPS Bracket(B)				2	
K-1-24	07-004S-SM5S	Fixing Screw for 24V SMPS(Set)				3	
K-1-25	07-004S-SM5S	Fixing Screw for SMPS Bracket(B)(Set)				4	
K-1-26	GP-009453-00	Copper Plate for SMPS(A)				2	
K-1-27	GP-009454-00	Copper Plate for SMPS(B)				2	
K-1-28	EP-000049-00	Fuse Holder				1	
K-1-29	EP-000050-00	External Concept				1	
K-1-30	10-072S-SW70	Fixing Screw for External Concept				4	
K-1-31	01-004S-BT01	Fan Cleaning Sticker				1	
K-1-32	GP-009455-00	Base Rubber				1	
K-1-33	GP-015970-00	Input voltage Sticker				1	
K-1-34	09-023C-SC53	Q.C Passed Sticker				1	

K

K-2

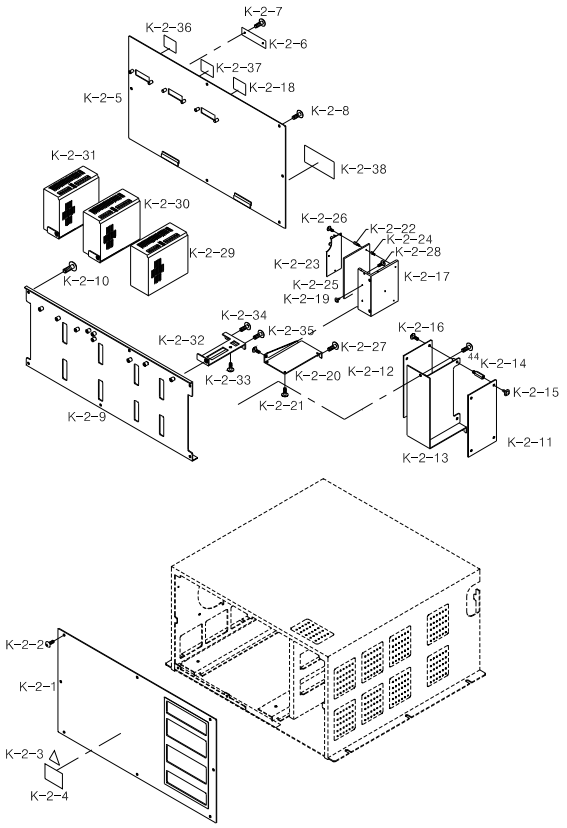

Note

Ref.No	Part No.	Part Name	Application date	Interchangeability	Hardware	Q'ty	Remarks
K-2-1	GP-026495-00	Front Cover				1	
K-2-2	10-003M-PT01	Fixing Screw for Front Cover(Truss)				8	
K-2-3	01-003S-BT01	Caution Sticker				1	
K-2-4	04-003S-AU10	Warning Sticker				1	
K-2-5	GP-009441-00	Rear Cover				1	
K-2-6	02-001B-SW67	Switch Cover				1	
K-2-7	SC-000395-00	Fixing Screw for Switch Cover(Truss)				2	
K-2-8	10-003M-PT01	Fixing Screw for Rear Cover(Truss)				8	
K-2-9	GP-009445-01	Driver Fixing Plate				1	
K-2-10	07-004S-SM5S	Fixing Screw for Driver Fixing Plate(Set)				4	
K-2-11	BD-000245-00	Joint Board(A)				1	
K-2-12	BD-000245-00	Joint Board(B)				1	
K-2-13	GP-009442-01	Fixing Bracket for Joint Board				2	
K-2-14	10-012M-PT10	Stud for Joint Board				4	
K-2-15	10-021M-SW66	Fixing Screw for Joint Board(Set)				8	
K-2-16	07-004S-SM5S	Fixing Screw for J/B Fixing Bracket(Set)				3	
K-2-17	GP-012729-00	Radiator for Trimming Driver				1	
K-2-18	GP-009833-00	Y-Driver Sticker				1	
K-2-19	06-001C-SE50	Fixing Screw for Trimming Driver Radiator(A)				2	
K-2-20	GP-009433-00	Fixing Bracket for Trimming Driver				1	
K-2-21	10-004M-SW68	Fixing Screw for Trimming Driver Radiator(B)				3	
K-2-22	08-002M-sw67	Stud for Trimming Driver(A)				3	
K-2-23	BD-000244-00	Trimming Driver(A)				1	
K-2-24	10-012M-PT10	Stud for Trimming Driver(B)				3	
K-2-25	BD-000244-00	Trimming Driver(B)				1	
K-2-26	10-021M-SW66	Fixing Screw for Trimming Driver (Set)				3	
K-2-27	07-004S-SM5S	Fixing Screw for Trimming Driver Bracket A(Set)				2	
K-2-28	10-042M-AU10	Fixing Screw for Trimming Driver BracketB(Set)				2	
K-2-29	10-007A-5050	Main Driver (QS1L03AA)				1	
K-2-30	10-007A-5050	X-Driver (QS1L03AA)				1	
K-2-31	10-007A-5050	Y-Driver (QS1L03AA) (2Head)				1	
	02000200B000	Y-Driver (4,6Head)				1	
K-2-32	GP-009434-00	Fixing Bracket for Drive				1	
K-2-33	06-001C-SE50	Fixing Screw for Drive				2	
K-2-34	07-004S-SM5S	Fixing Screw for Drive Fixing Bracket A(Set)				1	
K-2-35	10-042M-AU10	Fixing Screw for Drive Fixing Bracket B(Set)				1	
K-2-36	GP-009831-00	Main Driver Sticker				1	
K-2-37	GP-009832-00	X-Driver Sticker				1	
K-2-38	GP-016274-00	Inside Sticker				1	

K

K-3

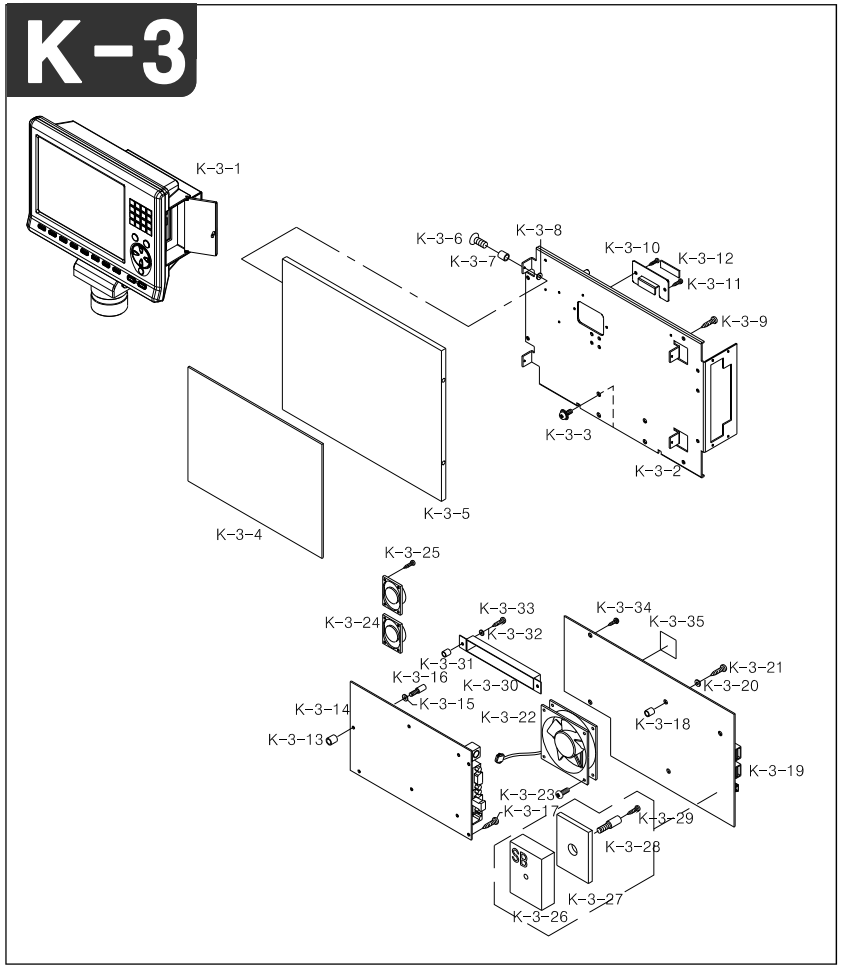

Note

Ref.No	Part No.	Part Name	Application date	Interchangeability	Hardware	Q'ty	Remarks
K-3-1	SWF-00000550	Operation Box Ass'y				1	
K-3-2	GP-014345-03	Base Plate				1	
K-3-3	07-004S-SM5S	Screw for Fixing Bracket for OP				4	
K-3-4	GP-014350-03	LCD Cover				1	
K-3-5	20-006A-SW70	LCD				1	
K-3-6	SC-000629-00	Screw for LCD (M2×L8)				4	
K-3-7	GP-019021-00	Insulation Bush(A)				4	
K-3-8	GP-019022-00	Insulation Bush(B)				4	
K-3-9	SC-000460-00	Screw for Base Plate				4	
K-3-10	01-002B-OT10	Pressing Plate for LCD				1	
K-3-11	20-002B-SW70	Connecting Pressing Plate Sponge				2	
K-3-12	10-028S-SC53	Screw for Pressing Plate (M3xL7)				2	
K-3-13	GP-014361-00	Insulation Bush(A)				6	
K-3-14	BD-000299-00	CPU Board				1	
K-3-15	GP-014362-00	Insulation Bush(B)				6	
K-3-16	GP-014341-03	CPU Board Fixing Stud				4	
K-3-17	07-005S-SM5S	CPU Board Screw (SET) (M3xL10)				2	
K-3-18	GP-014361-00	Insulation Bush(A)				6	
K-3-19	BD-000364-00	IO Board				1	
K-3-20	GP-014362-00	Insulation Bush(B)				4	
K-3-21	07-005S-SM5S	IO Board Fixing Screw (SET)				4	
K-3-22	EP-000030-00	FAN				1	
K-3-23	SC-000392-00	FAN Fixing Screw (M4xL30)				3	
K-3-24	01-016A-DU33	Speaker				2	
K-3-25	10-028S-SC53	Speaker Fixing Screw				4	
K-3-26	GP-017235-00	SB DDC Radiator				1	
K-3-27	GP-017239-00	SB DDC Radiator Sheet				1	
K-3-28	GP-010656-00	Fixing Stud for SB DDC Radiator				1	
K-3-29	10-028S-SC53	Fixing Screw for SB DDC Radiator(SET) (M3xL7)				1	
K-3-30	22027EL-A001	Inverter				1	
K-3-31	10-001C-AT10	Insulation Bush(A)				2	
	01-102B-OT10	Insulation Bush(B)				2	
K-3-33	10-028S-SC53	Inverter Fixing Plate (M3xL7)				2	
K-3-34	10-002S-SW66	IO Board 접지나사 (SET) (M3XL8)				2	
K-3-35	09-023C-SC53	QC Passed Sticker				1	

K

K-4

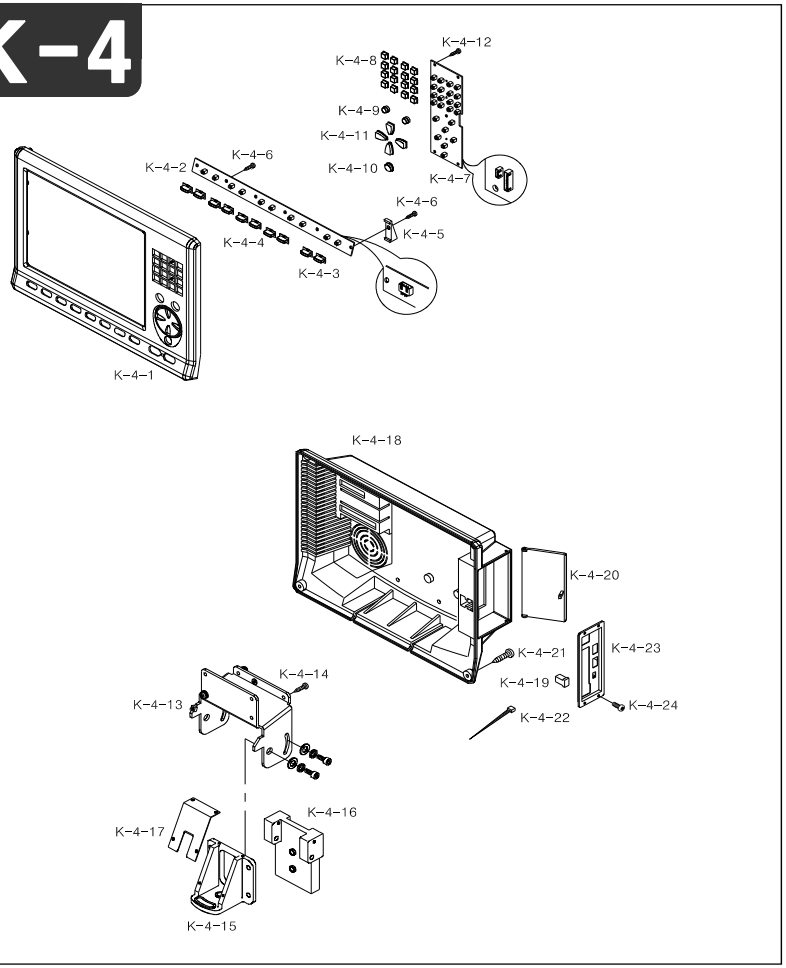

Note

Ref.No	Part No.	Part Name	Application date	Interchangeability	Hardware	Q'ty	Remarks
K-4-1	GP-014348-03	Front Cover				1	
K-4-2	BD-000347-01	F-KEY Board				1	
K-4-3	GP-014360-01	Button (START,STOP Key)				2	
K-4-4	GP-015068-02	Button (F Key)				8	
K-4-5	GP-015067-01	Angle Bushing				6	
K-4-6	SC-000747-00	F-KEY Board Screw (ST2.9xL12)				6	
K-4-7	BD-000346-00	C-KEY Board				1	
K-4-8	GP-014356-00	Button (Number Key)				16	
K-4-9	GP-014357-00	Button (DOWN,UP Key)				2	
K-4-10	GP-014359-00	Button (F-Speed Key)				1	
K-4-11	GP-015069-00	Button (Move Key)				4	
K-4-12	GP-014345-03	Base Plate				1	
K-4-13	GP-014343-00	Fixing Bracket for OP				1	
K-4-14	10-003M-PT01	Fixing Screw (M4xL8)				2	
K-4-15	G P-024894-0 0	Hinge Block				1	
K-4-16	G P-024895-0 0	Operation Box Holder Cover				1	
K-4-17	G P-024895-0 0	Operation Box Holder Cover				1	
K-4-18	GP-014349-00	Rear Cover				1	
K-4-19	01-003B-SW63	DOOR LOCK				1	
K-4-20	GP-014351-00	Connector Cover				1	
K-4-21	07-004S-SM5S	Rear Cover Fixing Screw (M4xL10)				4	
K-4-22	15-026M-1000	Cable Tie				5	

K

LAMP & SWITCH

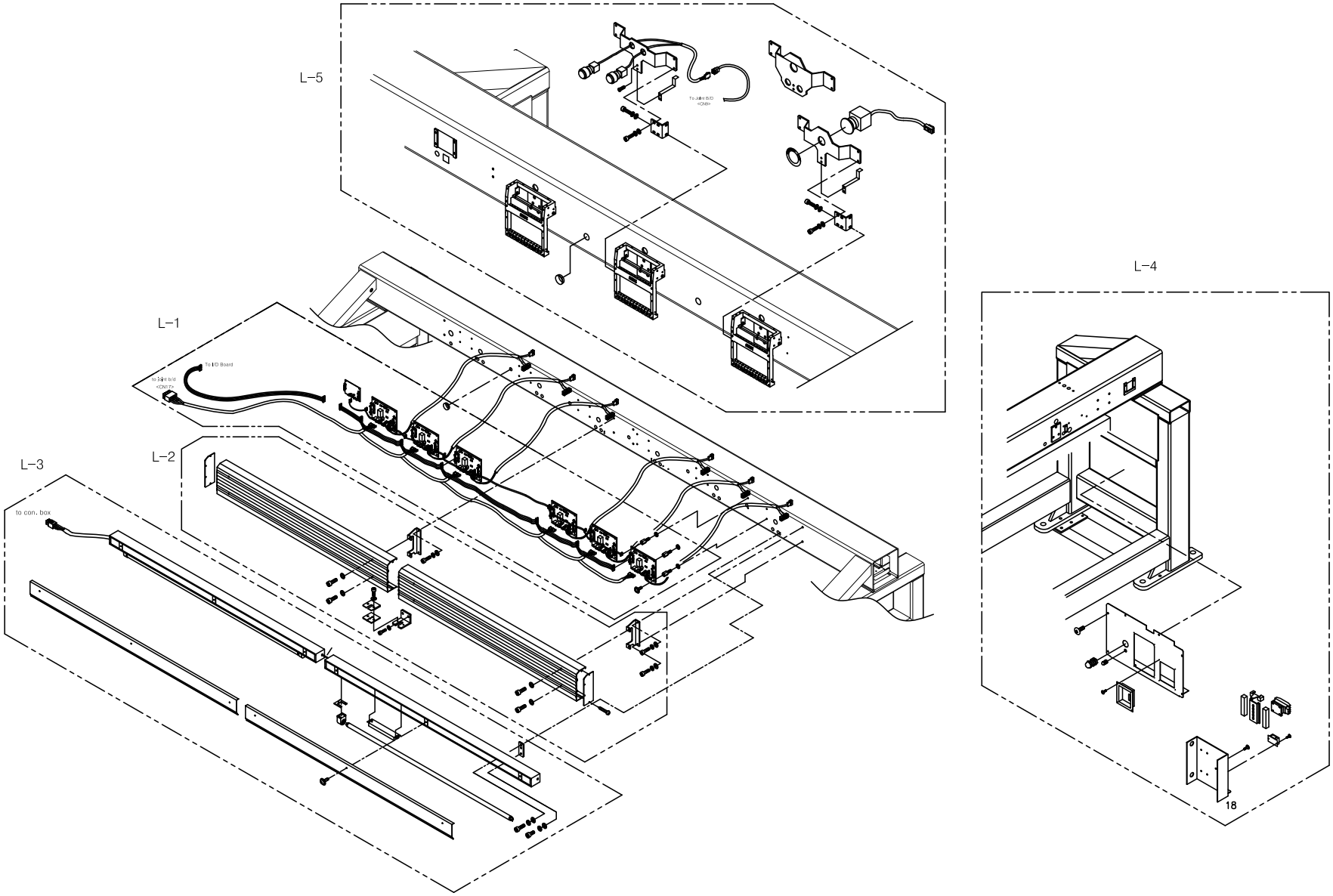
L-5
To Jaline B/D
<CN8>
L-1
To I/O Board
to Spit b/d
<CN15>
L-2
L-3
to con. box
L-4

L-1

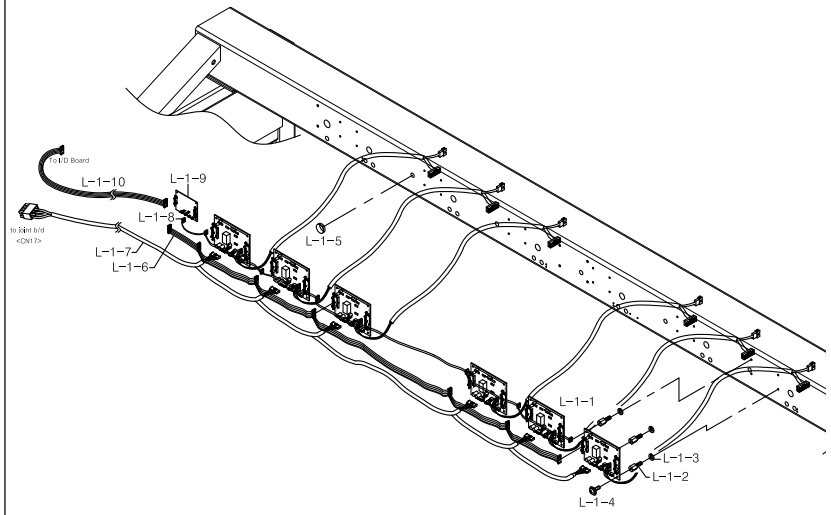

Note

Ref.No	Part No.	Part Name	Application date	Interchangeability	Hardware	Q'ty	Remarks
L-1-1	BD-000529-00	Thread Sensing Board	Feb,08,07 ~ Apr,22,07	△		6	
	BD-000529-01		Apr,23,07 ~ Jun,25,07	△			
	BD-000529-02		Jun,26,07 ~ Jul,02,07	△			
	BD-000529-03		Jul,03,07 ~ Jul,08,07	△			
	BD-000529-04		Jul,09,07 ~ Oct,22,07	△			
	BD-000529-05		Oct,23,07 ~ Mar,28,08	△			
	BD-000529-06		Mar,29,08 ~ Jul,29,08	△			
	BD-000529-07		Jul,30,08 ~ Sep,15,09	△			
	BD-000529-08		Sep,15,09 ~	△			
L-1-2	11049SC-A001	Board Stud Bolt			O	28	
L-1-3	18048SW-3115	Spring Washer (@5)			O	28	
L-1-4	18154SC-9134	PLUS SCREW (M3*L8)				24	
L-1-5	02017PM-A001	Cable Ring				5	
L-1-6	02105700U060	Cable (Sh-57-4)				1	
L-1-7	02105600U060	Cable (Sh-56-4)				1	
L-1-8	02106000U060	Cable (Sh-60-4)				1	
L-1-9	BD-000310-00	Dual Color Change Board	Dec,05,05 ~ Apr,25,06	△		1	
	BD-000310-01		Apr,26,06 ~ Jun,18,06	△			
	BD-000310-02		Jun,19,06 ~ Jul,24,06	△			
	BD-000310-03		Jul,25,06 ~ Aug,27,06	△			
	BD-000310-04		Aug,28,06 ~ Sep,24,06	△			
	BD-000310-05		Sep,25,06 ~ Oct,19,06	△			
	BD-000310-06		Oct,20,06 ~ Feb,04,07	△			
	BD-000310-07		Feb,05,07 ~ Dec,20,07	△			
	BD-000310-08		Dec,21,07 ~ Jan,15,08	△			
	BD-000310-09		Jan,16,08 ~ Apr,20,08	△			
	BD-000310-10		Apr,21,08 ~	△			
	BD-000310-11		Jan,23,09 ~	△			
	BD-000310-12		Sep,03,09 ~	△			
	BD-000310-13		Nov,17,09 ~	△			
	BD-000310-14		Dec,14,09 ~	△			
L-1-10	02105900U000	Sh-59				1	

L-2

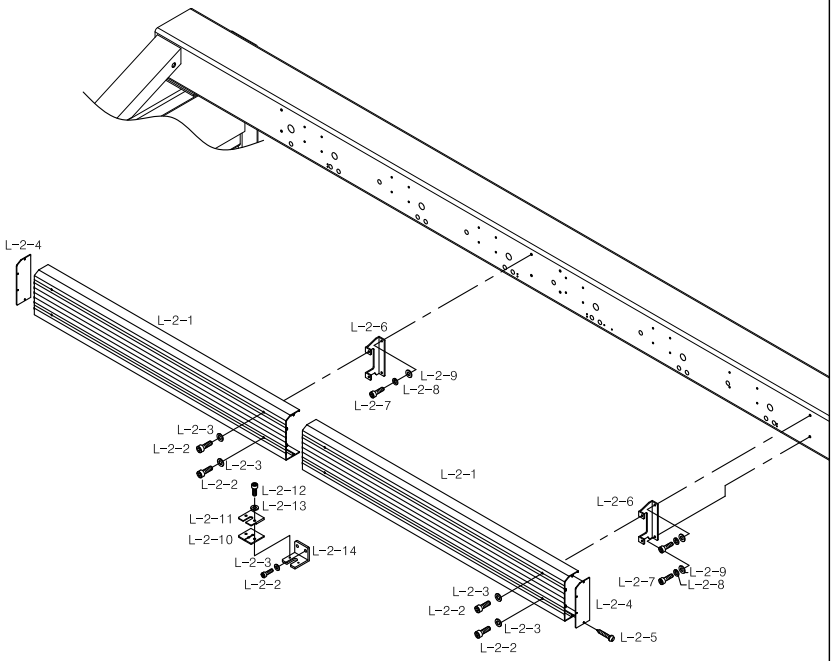

Note

Ref.No	Part No.	Part Name	Application date	Interchangeability	Hardware	Q'ty	Remarks
L-2-1	GP-029088-00	Cable Cover "B"	Apr,17,07 ~ May,06,07	X		2	
	GP-029088-01		May,07,07 ~ May,05,08	△			
	GP-029088-02		May,06,08 ~	△			
L-2-2	02031SC-7113	Hex. Socket Screw(M5*L10)			O	8	
L-2-3	18049SW-3111	Washer (@5)			O	8	
L-2-4	12000200B000	CABLE COVER PLATE				2	
L-2-5	02065SC-3328	Tapping Screw (M3*L10)			O	8	
L-2-6	02000400B000	CABLE COVER HOLDER				4	
L-2-7	08076SC-7113	Hex. Socket Bolt (M5*L12)			O	8	
L-2-8	18048SW-3115	Spring Washer (@5)			O	8	
L-2-9	16018SW-1111	Washer (@5)			O	8	
L-2-10	02054RB-UK01	Clamp Rubber				1	
L-2-11	02053PR-UK01	Cable Clamp				1	
L-2-12	18013AF-7113	Hex. Socket Bolt (M4*L10)			O	2	
L-2-13	18049SW-3111	Washer (@5)			O	2	
L-2-14	GP-024977-00	Cable Bracket For Busing				1	

L-3

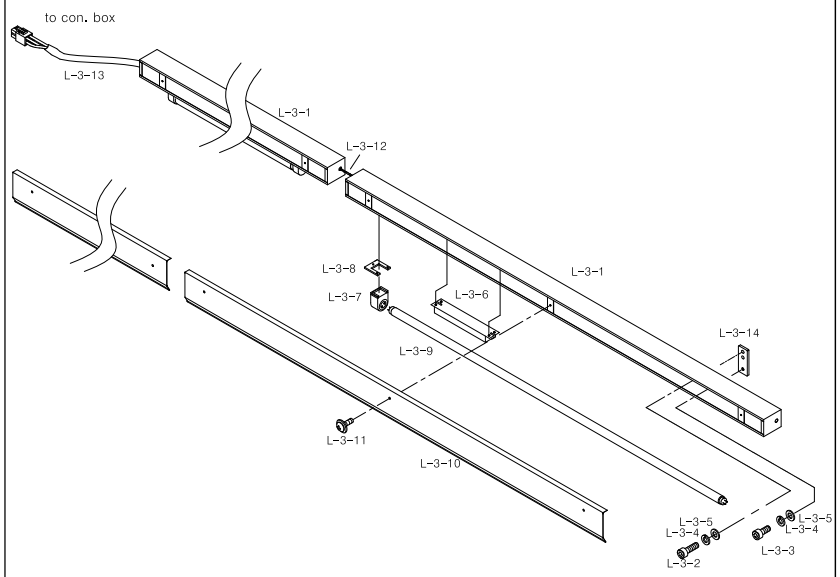

Note

Ref.No	Part No.	Part Name	Application date	Interchangeability	Hardware	Q'ty	Remarks
L-3-1	AS-001838-00	Lamp Ass,Y "B"				2	
L-3-2	03016SC-4113	Hex. Socket Bolt (M5*L15)			O	8	
L-3-3	02031SC-7113	Hex. Socket Screw(M5*L10)			O	4	
L-3-4	18048SW-3115	Spring Washer (@5)			O	12	
L-3-5	16018SW-1111	Washer (@5)			O	12	
L-3-6	09000700B000	Ballast				2	
L-3-7	20014ET-A001	Lamp Socket				4	
L-3-8	GP-009003-00	Lamp Socket Fixed Plate				4	
L-3-9	20009EL-B001	LAMP (32W)			O	2	
L-3-10	20009PR-A001	Reflecting				2	
L-3-11	02010AF-3123	Truss Screw (M4*L8)			O	6	
L-3-12	25053EL-UK06	Cable (25-53)				1	
L-3-13	02105000E040	Cable(Ce4Ht-50)				1	
L-3-14	20001PR-A001	Lamp Ass'Y Connecter				4	

L-4

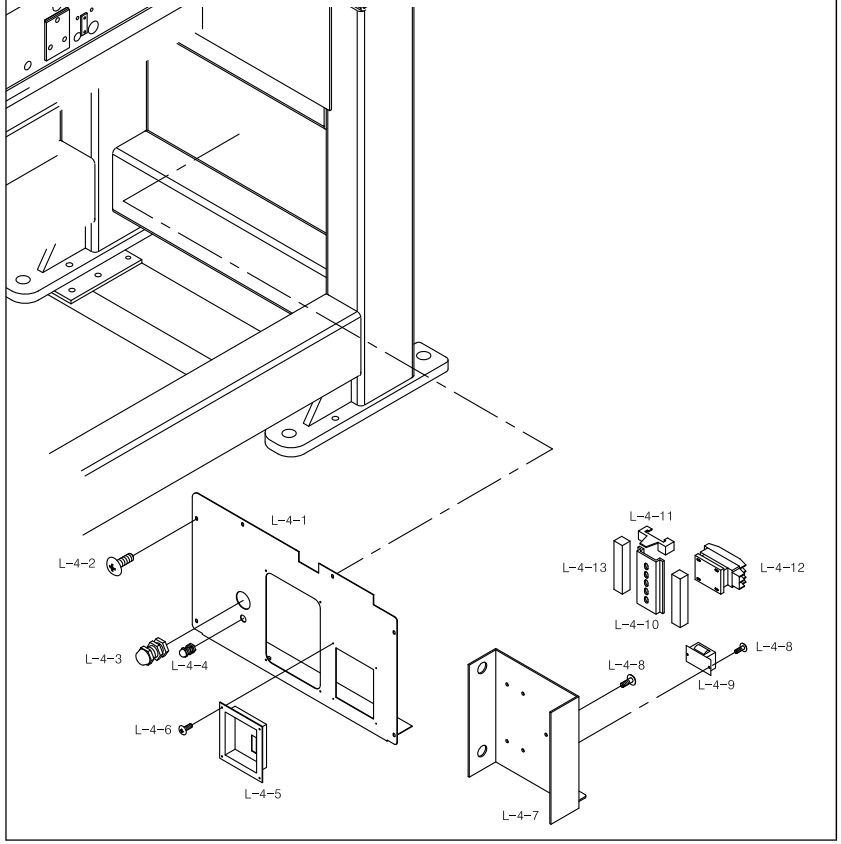

Note

Ref.No	Part No.	Part Name	Application date	Interchangeability	Hardware	Q'ty	Remarks
L-4-1	GP-029086-00	BODY INSIDE COVER "R"	Apr,17,07 ~ Mar,17,08	X		1	
	GP-029086-01		Mar,18,08 ~	△			
L-4-2	02044SC-3123	Truss Screw (M5*L8)			O	61	
L-4-3	02000600T000	Cable Grand (Dapg-36)				1	
L-4-4	02000400T000	Cable Grand *Dac1-11)				1	
L-4-5	02088PR-UK01	Power Switch Cover				1	
L-4-6	02010SC-3123	Truss Screw (M4*L8)			O	4	
L-4-7	GP-025070-00	MAIN SWITCH BOX				1	
L-4-8	02015SC-7113	Hex.Socket Bolt(M4*L10)			O	4	
L-4-9	05000210T000	TRANSFORMER (EMT25V) 1A/25.5V				1	
L-4-10	02000910T000	MAGNETIC S/W FIXED BRACKET				1	
L-4-11	02001300T000	BRACKET STOPPER (CE)				2	
L-4-12	02000100T000	MAGNETIC SWITCH SET				1	
L-4-13	09001400BT00	CEMENT RESISTANCE (4.7/20W)				2	

L-5

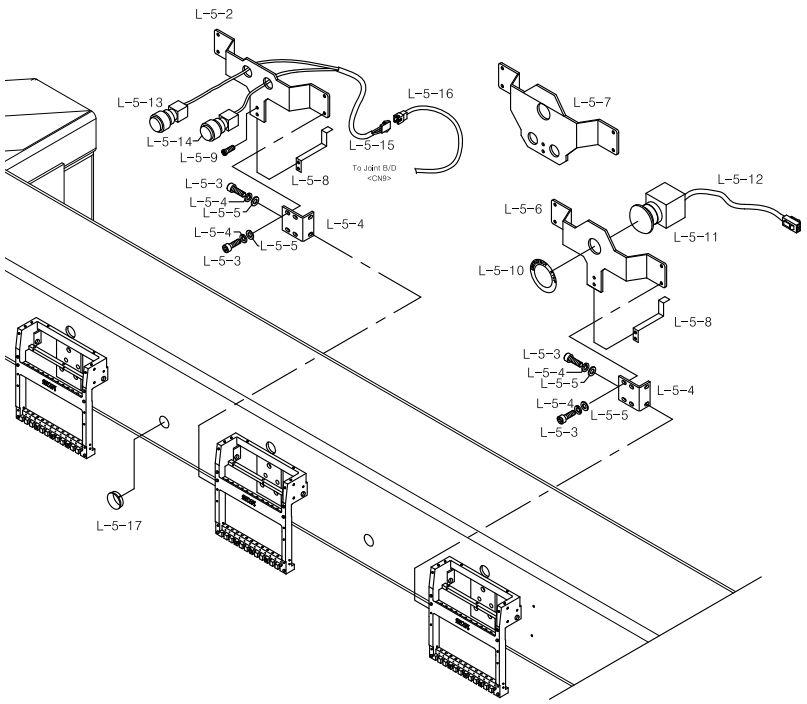

Note

Ref.No	Part No.	Part Name	Application date	Interchangeability	Hardware	Q'ty	Remarks
L-5-1	04000104uk00	Switch Base Holder				6	
L-5-2	02024LA-UK14	S/B Switch Base				2	
L-5-3	14002SC-7113	Hex.Socket Bolt (M6*L15)			O	6	
L-5-4	16014SW-4115	Spring Washer (@6)			O	22	
L-5-5	08057SW-1111	Washer (@6)			O	22	
L-5-6	02028LA-UK14	Emergency Switch Base				1	
L-5-7	02008LA-UK12	Switch Base				1	
L-5-8	02062PR-UI12	Cable Holder				3	
L-5-9	15089SC-7119	C.S Screw (M4*L10)			O	3	
L-5-10	02103ET-UK01	Emergency Switch Sticker				1	
L-5-11	02000800T000	Emergency Switch Set				1	
L-5-12	02106400U000	Emergency S/W Cable				1	
L-5-13	02027EL-UK01	S/B Switch Set				2	
L-5-14	02026EL-UK01	Start Switch Set				2	
L-5-15	25032EL-UK01	Cable (25-28)				2	
L-5-16	25027EL-UK06	Cable (25-27)				1	
L-5-17	02017PM-A001	Cable Ring				4	

Thread Tension Unit

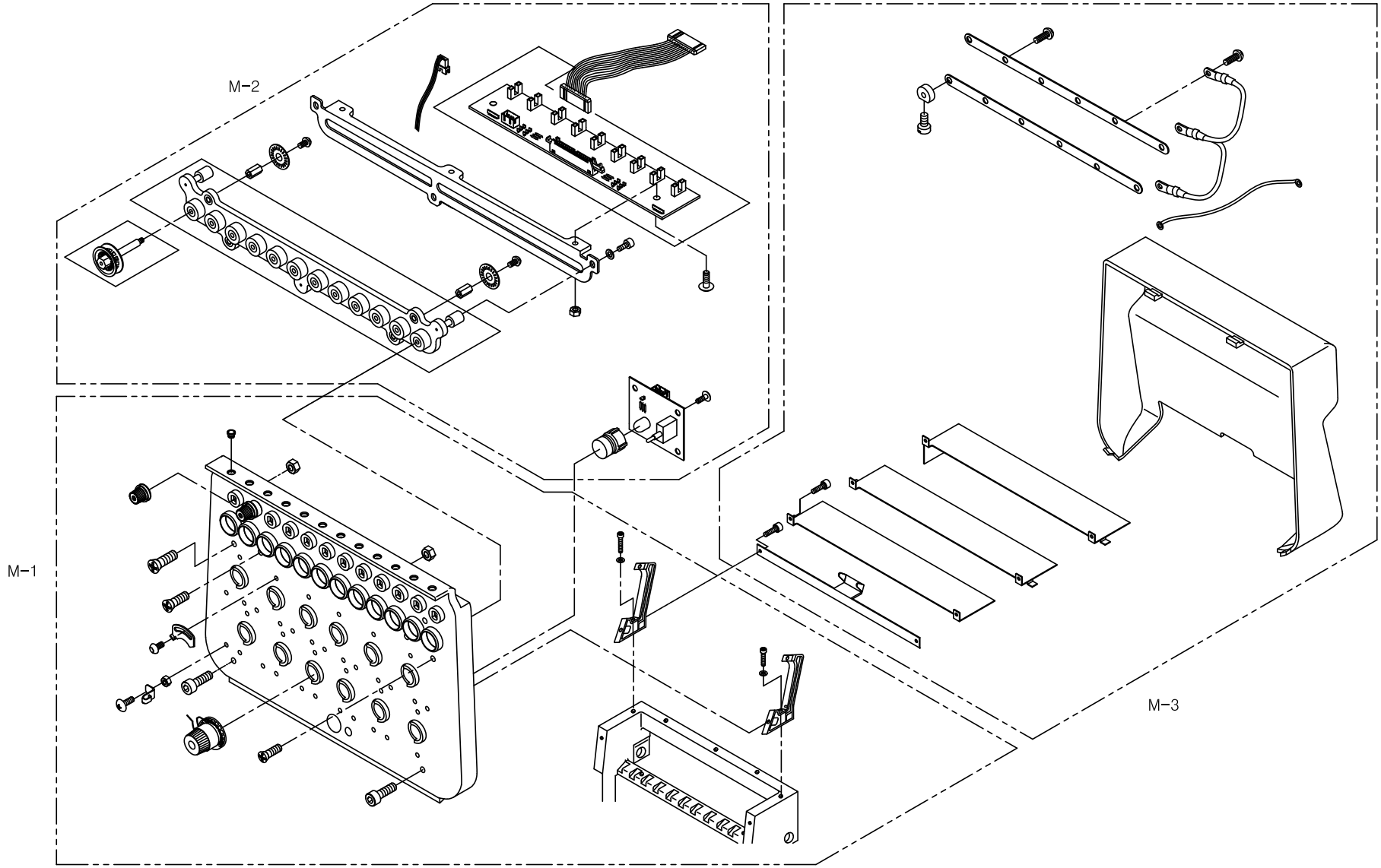

M-1

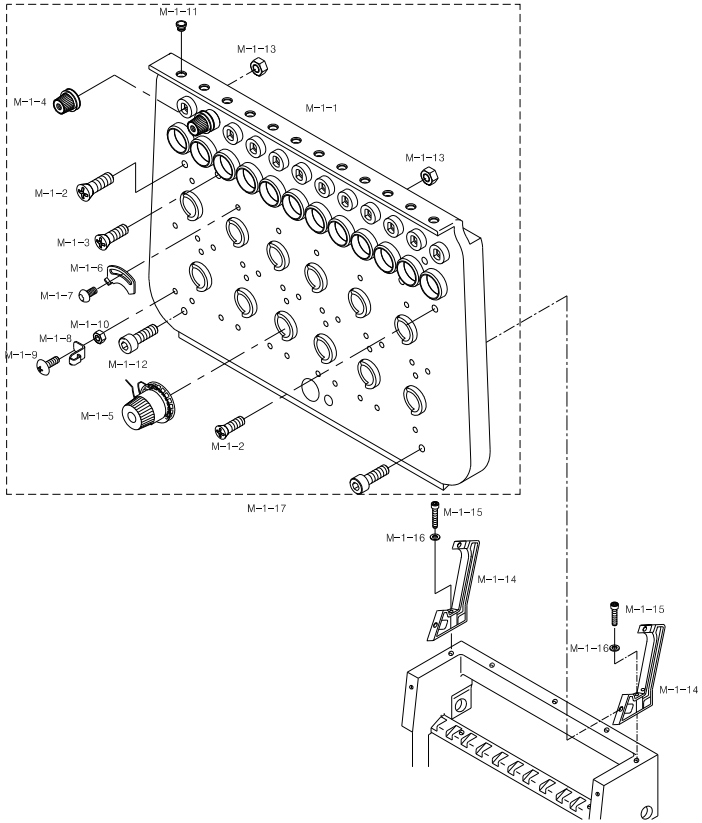

Note

Ref.No	Part No.	Part Name	Application date	Interchangeability	Hardware	Q'ty	Remarks
M-1-1	08300105I000	TENSION UNIT PLATE				6	
M-1-2	15089SC-7119	C.S Screw (M4*L10)			O	12	
M-1-3	02002SC-7119	Plus Screw (M4*L8)			O	30	
M-1-4	08320000I000	SUB TENSION ADJUSTING SET				72	
M-1-5	08310000B000	TENSION ADJUSTING SET				72	
M-1-6	11009PR-B001	Thread Breakage Detecting Plat				72	
M-1-7	09005SC-3123	Truss Screw (M3*L6)			O	72	
M-1-8	11012PR-B001	Thread Guide (New)				180	
M-1-9	09005SC-3123	Truss Screw (M3*L6)			O	180	
M-1-10	11014SN-1211	Hex.Nut (M3-No2)			O	180	
M-1-11	05452CM-A001	EYELET "A"				72	
M-1-12	04010MC-7113	Hex.Socket Bolt (M4*L10)			O	12	
M-1-13	03031SN-A001	Pin. Nut (11/64,N=40)			O	72	
M-1-14	11020PM-B001	TENSION ADJUSTING PLATE HOLDER				12	
M-1-15	05009SW-1111	Washer (@4-L)			O	12	
M-1-16	11029SC-4113	Hex. Socket Bolt (M4*L20)			O	12	
M-1-17	08300005I000	TENSION UNIT PLATE Assy				6	

M-2

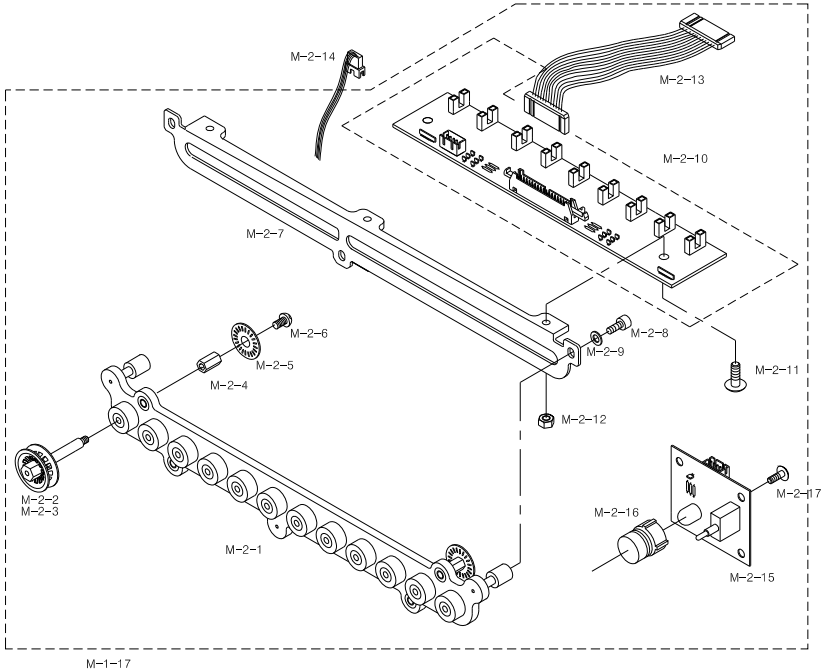

Note

Ref.No	Part No.	Part Name	Application date	Interchangeability	Hardware	Q'ty	Remarks
M-2-1	08300705I000	ROLLER BASE				4	
M-2-2	11075PM-B001	Thread Sensor Roller(B1)Set				28	
M-2-3	11076PM-B001	Thread Sensor Roller(B2)Set				32	
M-2-4	11083CW-B001	THREAD DETECTING WHEEL STUD				60	
M-2-5	GP-005179-00	THREAD BREAKAGE DETECTING WHEEL				48	
M-2-6	08011SC-8118	Screw (M2*L4)			O	48	
M-2-7	08300205I000	BOARD BASE				4	
M-2-8	02023SC-7113	Hex.Socket Bolt (M4*L8)			O	12	
M-2-9	06003SW-2111	Washer (@4)			O	12	
M-2-10	20009EL-WH15	WHEEL SENSOR BOARD				4	
M-2-11	02010SC-3123	Truss Screw (M4*L8)			O	12	
M-2-12	05016SN-1211	Hex.Nut (M4)			O	12	
M-2-13	02102200U000	Plate To B/B Cable				4	
M-2-14	02101800B000	Plate Led S/W Board Cable				4	
M-2-15	02-0000-EMB1	Head On/Off S/W Board 9C,15C				4	
M-2-16	08300400A000	Lamp Cover				4	
M-2-17	09005SC-3123	Truss Screw (M3*L6)			O	48	

M-3

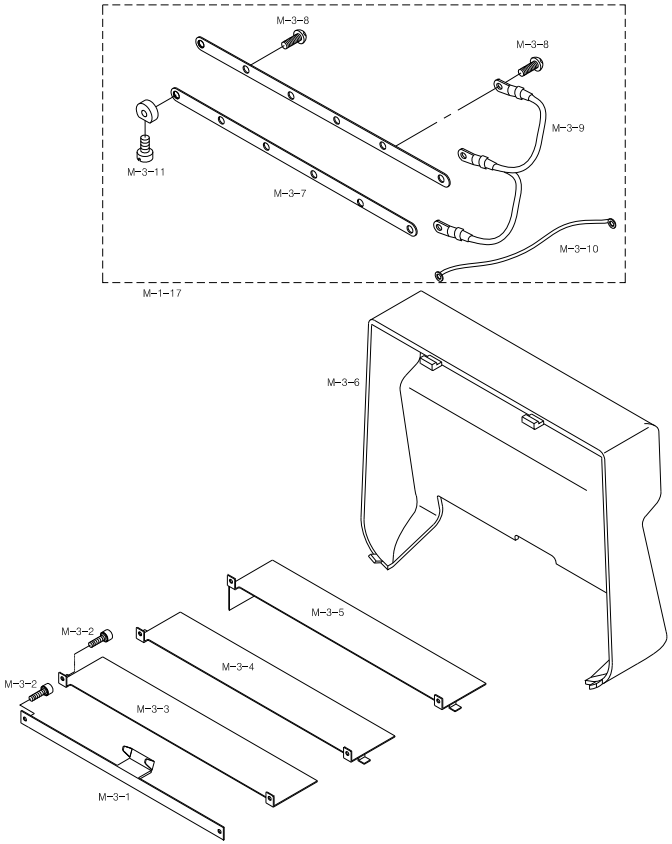

Note

Ref.No	Part No.	Part Name	Application date	Interchangeability	Hardware	Q'ty	Remarks
M-3-1	11032PR-T121	Cable Supporter 12C				1	
M-3-2	02023SC-7113	Hex. Socket Bolt (M4*L8)			O	6	
M-3-3	02006PR-UK14	COVER PLATE (R) 15C				1	
M-3-4	11031PR-AB00	Cover Plate 12C				1	
M-3-5	02009PR-UK12	Cover Plate Uk1502-45				1	
M-3-6	08000805I000	TENSION PLATE COVER				4	
M-3-7	08300305I000	CONNECTION PLATE "A"				4	
	08300405I000	CONNECTION PLATE "B"				4	
M-3-8	09005SC-3123	Truss Screw (M3*L6)			O	48	
M-3-9	25124EL-B001	Tension Plat Earth Cable 15C				4	
M-3-10	25126EL-B001	Sensor Board To Wheel Earth				4	
M-3-11	11009SC-A001	Stud Screw				48	

N

SWF

Tubular & Border Frame

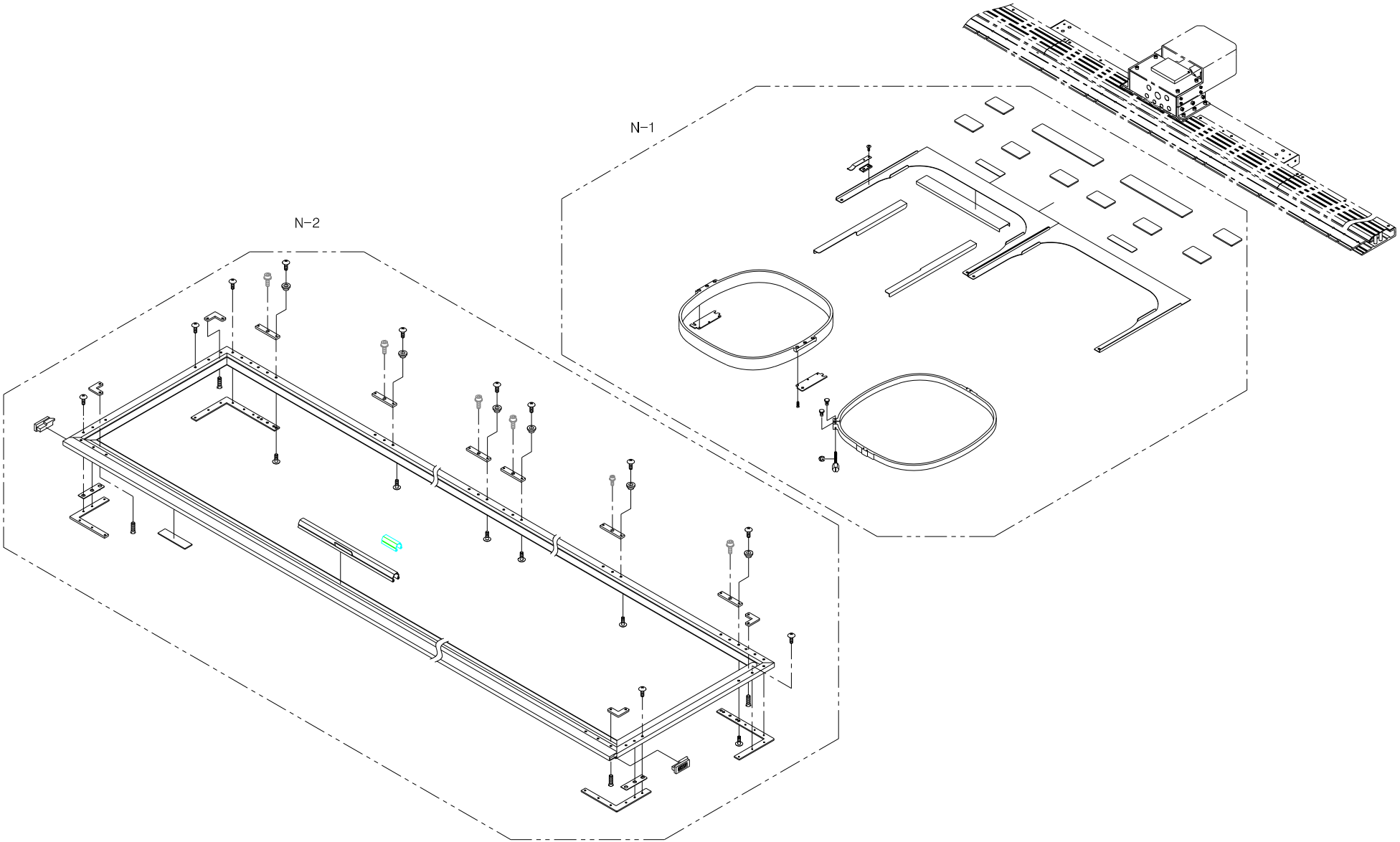

N-1

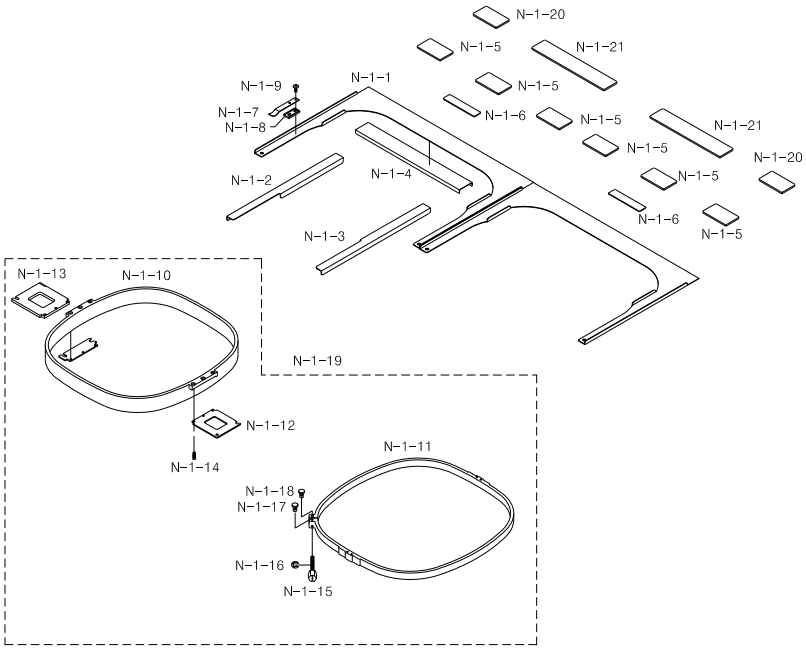

Note

Ref.No	Part No.	Part Name	Application date	Interchangeability	Hardware	Q'ty	Remarks
N-1-1	GP-025936-00	Tubular Frame (A)	Jan,25,07 ~ Jun,17,08	X		6	
	GP-025936-01		Jun,18,08 ~	△			
N-1-2	GP-025937-00	Tubular Frame (B-1)	Jan,25,07 ~ Jun,26,07	X		6	
	GP-025937-01		Jun,27,07 ~ Jun,17,08	△			
	GP-025937-02		Jun,18,08 ~ Nov,19,08	△			
	GP-025937-03		Nov,20,08 ~	△			
N-1-3	GP-025938-00	Tubular Frame (B-2)	Jan,25,07 ~ Jun,26,07	X		6	
	GP-025938-01		Jun,27,07 ~ Jun,17,08	△			
	GP-025938-02		Jun,18,08 ~ Nov,19,08	△			
	GP-025938-03		Nov,20,08 ~	△			
N-1-4	GP-025939-00	Tubular Frame (C)				6	
N-1-5	GP-027608-00	Tubular Frame (D)				18	
N-1-6	GP-027609-00	Tubular Frame (H)				2	
N-1-7	22005PR-T121	Clip				12	
N-1-8	22003PM-T121	Clip Bracket (L)				12	
N-1-9	09100200U000	Fixed Clip Bracket Screw				12	
N-1-10	GP-011629-00	TUBULAR FRAME(INNER)	Sep,05,05 ~	X		12	
	GP-011629-01		Apr,07,09 ~	△			
N-1-11	GP-011630-00	TUBULAR FRAME(OUTER)	Sep,05,05 ~	X		12	
	GP-011630-01		Apr,07,09 ~	△			
N-1-12	17014PR-UK01	Round Frame Holder-A				24	
N-1-13	17015PR-UK01	Round Frame Holder-B				24	
N-1-14	SC-000533-00	Plus Screw (M3*L6)			O	72	
N-1-15	22044CW-UK01	Adjusting Bolt				12	
N-1-16	15159SR-4013	E-Ring (3@)				12	
N-1-17	22045CW-UK01	Adjusting Bolt Guide				12	
N-1-18	22046CW-UK01	Adjusting Nut				12	
N-1-19	AS-003332-00	Tubular Frame Assy				12	
N-1-20	GP-048057-00	Tubular Frame Attachment(A)				12	
N-1-21	GP-048058-00	Tubular Frame Attachment(B)				12	

N-2

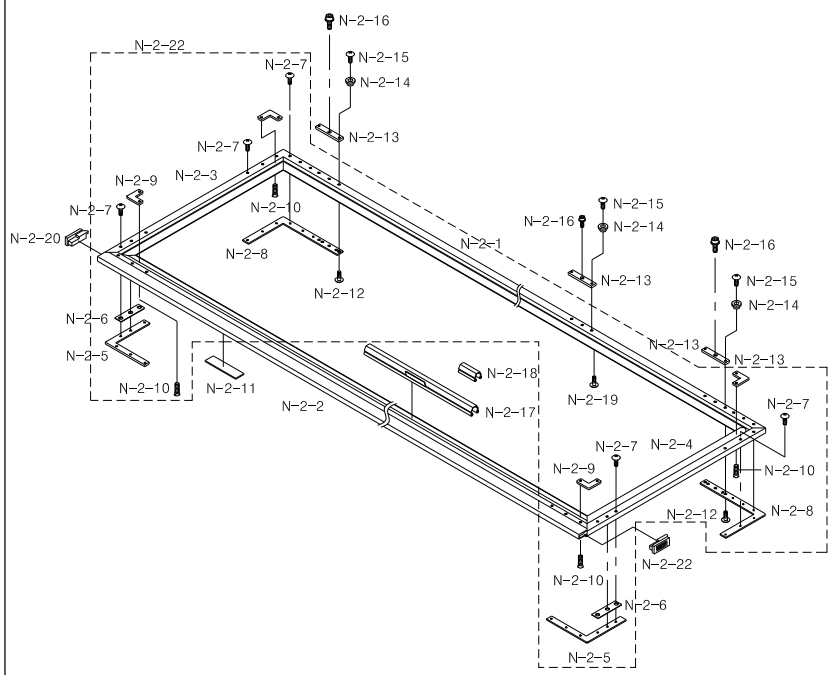

Note

Ref.No	Part No.	Part Name	Application date	Interchangeability	Hardware	Q'ty	Remarks
N-2-1	GP-025951-00	Square Frame (A)				1	
N-2-2	24004AD-UK06	Square Frame (B) L=3152				1	
N-2-3	24007AD-UK06	Square Frame (D) L=583				1	
N-2-4	24006AD-UK06	Square Frame (C) L=583				1	
N-2-5	24008PR-UK06	Connecting Plate (F)				2	
N-2-6	24005PR-UK06	Frame Space				2	
N-2-7	02044SC-3123	Truss Screw (M5*L8)			O	24	
N-2-8	24004PR-UK02	Connecting Plate "E"				2	
N-2-9	24011PR-T121	Connecting Plate "C"				4	
N-2-10	10010SC-8119	Plus Screw (M3*L5)			O	8	
N-2-11	24016SF-T121	Felt				23	
N-2-12	15042SC-3123	Truss Screw (M4*L6)			O	6	
N-2-13	GP-025952-00	SQUARE FRAME FIXIING PLATE A				6	
N-2-14	18025PM-UK01	Location Block				3	
N-2-15	18153SC-3123	Plus Screw (M4*L10)			O	3	
N-2-16	05012MC-7113	Fixed Screw				6	
N-2-17	18084PR-A001	Embroidery Frame Clip L,300				16	
	18085PR-A001	Embroidery Frame Clip				6	
	18085PR-T121	Embroidery Frame Clip L,220				2	
N-2-18	18086PR-B001	Frame Clip Support				48	
N-2-19	02010SC-3123	Truss Screw (M4*L8)				4	
N-2-20	24026RB-UK06	Rubber Cap (L)				1	
N-2-21	24027RB-UK06	Rubber Cap (R)				1	
N-2-22	AS-015538-00	Square Assy				1	

Bobbin Winder

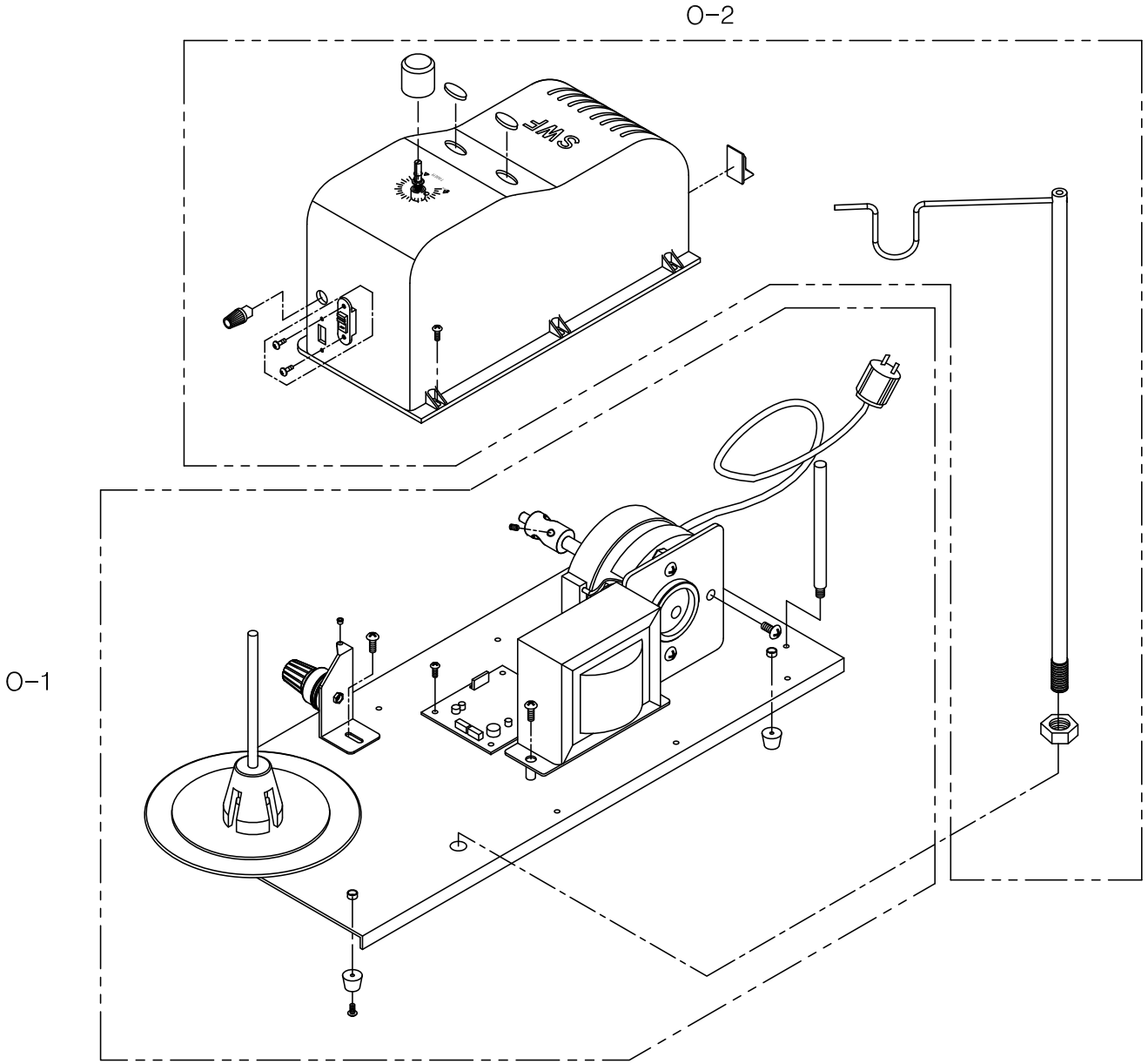

O-1

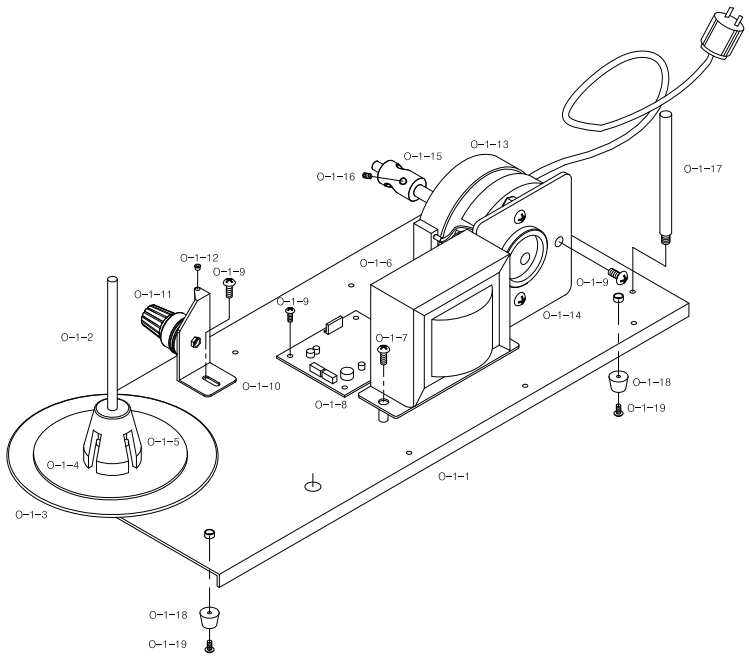

Note

Ref.No	Part No.	Part Name	Application date	Interchangeability	Hardware	Q'ty	Remarks
O-1-1	GP-014870-00	Base				1	
O-1-2	GP-014366-00	Spool Post				1	
O-1-3	GP-014363-00	Spool Support Base				1	
O-1-4	GP-014365-00	Spool Support Base Sponge				1	
O-1-5	12012-PM-A001	Spool Holder				1	
O-1-6	EP-000078-00	Transformer A'ssy				1	
O-1-7	18153SC-3123	Truss Screw (M4*L12)				8	
O-1-8	EP-000095-00	PCB (DW-BW01)				1	
O-1-9	15042SC-3123	Truss Screw (M4*L6)				9	
O-1-10	GP-014370-00	Tension Control Holder				1	
O-1-11	AS-003951-00	Thread Control Device Ass'y				1	
O-1-12	05452CM-A001	Thread Guide Bushing				1	
O-1-13	MO-000029-00	Motor Ass'y				1	
O-1-14	GP-014871-00	Motor Bracket				1	
O-1-15	GP-014354-00	Bobbin Shaft	Jan,06,06 ~ Feb,26,06	X		1	
	GP-014354-01		Feb,27,06 ~ Mar,02,06	△			
	GP-014354-02		Mar,03,06 ~ Mar,08,06	△			
	GP-014354-03		Mar,09,06 ~	△			
O-1-16	SC-000173-00	Set Screw (M5*L4)				1	
O-1-17	02026SC-A001	Stand				1	
O-1-18	GP-014346-00	Rubber For Support Base				4	
O-1-19	13054SC-3123	Truss Screw (M3*L8)				4	

O-2

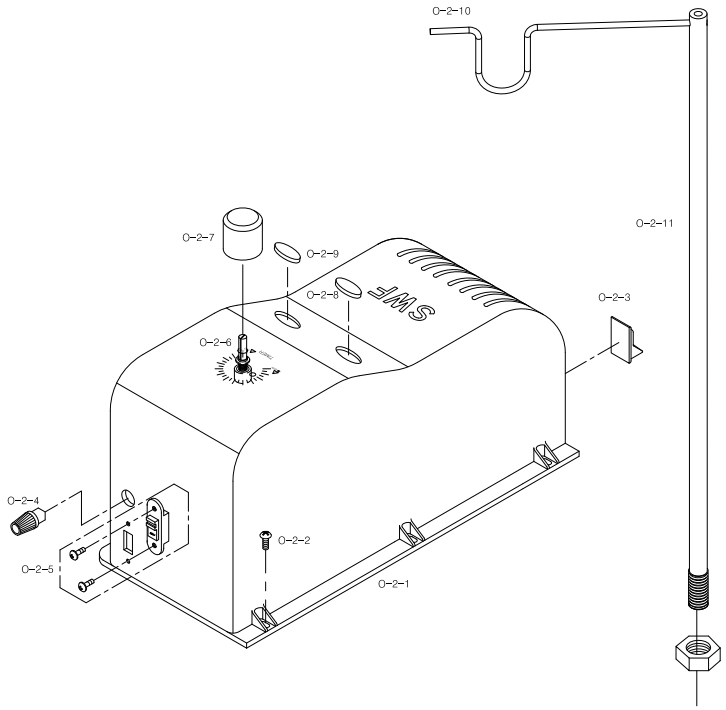

Note

Ref.No	Part No.	Part Name	Application date	Interchangeability	Hardware	Q'ty	Remarks
O-2-1	GP-014869-00	Cover	Jan,26,06 ~ Dec,04,06	X		1	
	GP-014869-01		Dec,05,06 ~	△			
O-2-2	18153SC-3123	Truss Screw (M4*L12)			O	8	
O-2-3	EP-000079-00	On / Off Switch				1	
O-2-4	GP-014678-00	Fuse Holder				1	
O-2-5	EP-000082-00	Switch (Select)				1	
O-2-6	GP-014677-00	VR Knob				1	
O-2-7	EP-000083-00	VR				1	
O-2-8	EP-000080-00	Push Switch (Start)				1	
O-2-9	EP-000081-00	Push Switch (Stop)				1	
O-2-10	GP-014369-00	Antenna Bar Hanger				2	
O-2-11	GP-014368-00	Antenna Bar				1	

COVER

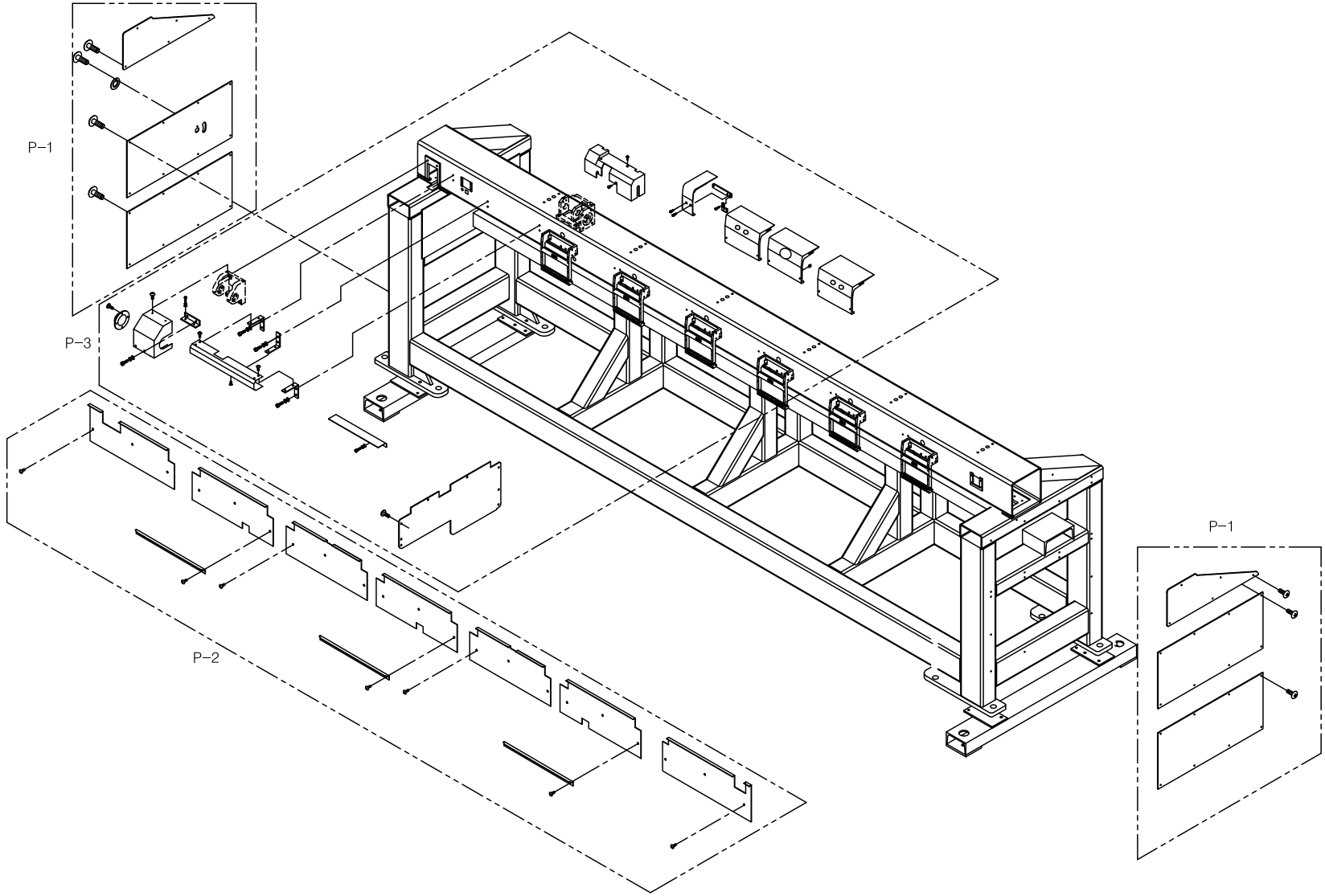

P-1

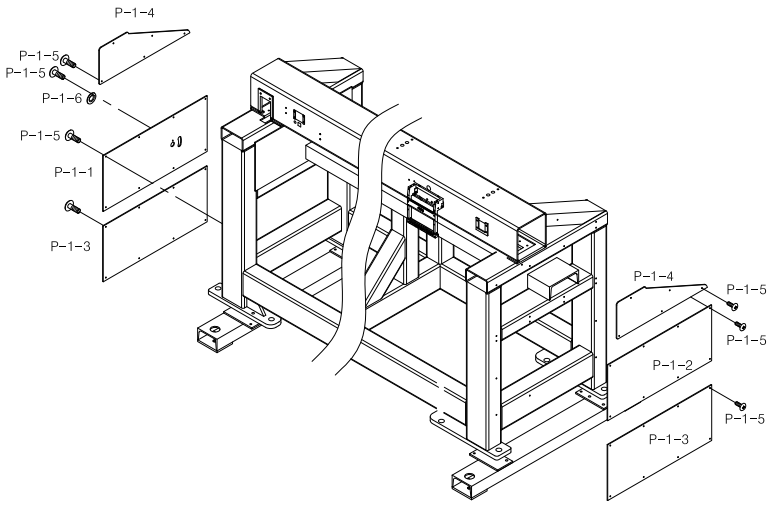

Note

Ref.No	Part No.	Part Name	Application date	Interchangeability	Hardware	Q'ty	Remarks
P-1-1	GP-029081-00	BODY SIDE COVER(A) "R"	Apr,17,07 ~ May,03,07	X		1	
	GP-029081-01		May,04,07 ~	△			
P-1-2	GP-029082-00	BODY SIDE COVER(A) "L"	Apr,17,07 ~ May,03,07	X		1	
	GP-029082-01		May,04,07 ~	△			
P-1-3	GP-029083-00	BODY SIDE COVER(B)				2	
P-1-4	GP-030097-00	BEAM SIDE COVER				2	
P-1-5	02044SC-3123	Truss Screw (M5*L8)			O	61	
P-1-6	02054PR-A001	Main Motor Pulley Cover				1	

P-2

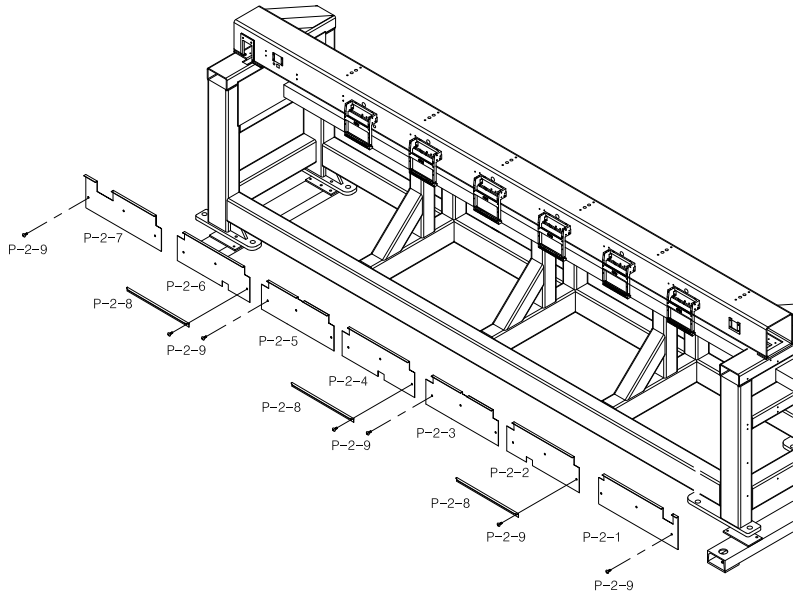

Note

Ref.No	Part No.	Part Name	Application date	Interchangeability	Hardware	Q'ty	Remarks
P-2-1	GP-029073-00	BODY FRONT COVER "A"	Apr,17,07 ~ Apr,19,07	X		1	
	GP-029073-01		Apr,20,07 ~ Jul,04,07	△			
	GP-029073-02		Jul,05,07 ~	△			
P-2-2	GP-029074-00	BODY FRONT COVER "B"				1	
P-2-3	GP-029075-00	BODY FRONT COVER "C"				1	
P-2-4	GP-029076-00	BODY FRONT COVER "D"				1	
P-2-5	GP-029077-00	BODY FRONT COVER "E"				1	
P-2-6	GP-029078-00	BODY FRONT COVER "F"				1	
P-2-7	GP-029079-01	BODY FRONT COVER "G"				1	
P-2-8	GP-019554-00	Table Support Angle	Apr,17,07 ~ Apr,19,07	X		3	
	GP-019554-01		Apr,20,07 ~ Jul,04,07	△			
	GP-019554-02		Jul,05,07 ~	△			
P-2-8	GP-019554-00	Table Support Angle				3	
P-2-9	02044SC-3123	Truss Screw (M5*L8)			O	61	

P-3

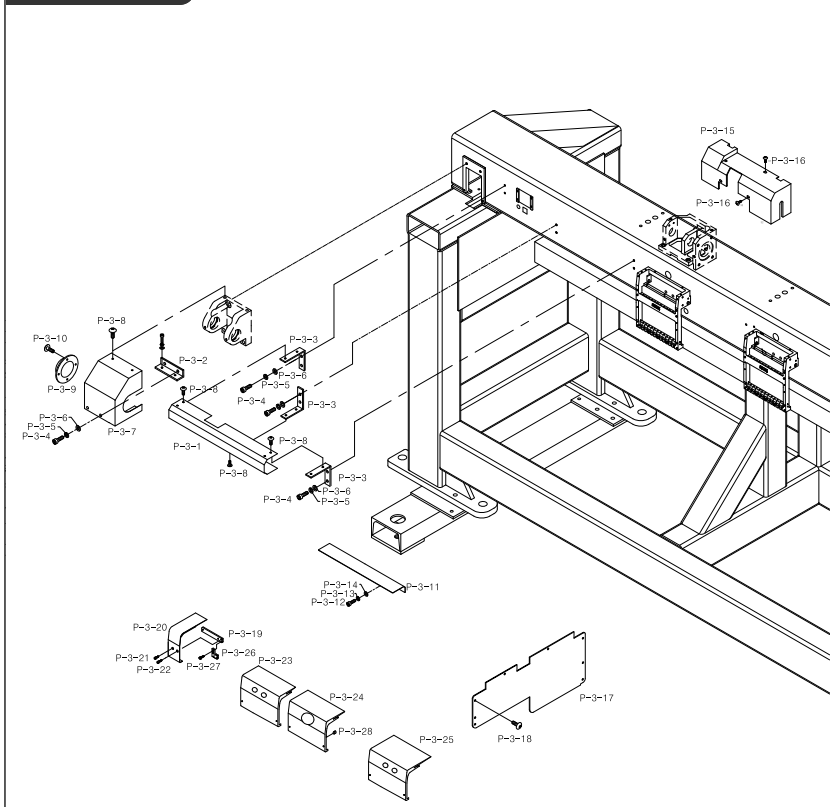

Note

Ref.No	Part No.	Part Name	Application date	Interchangeability	Hardware	Q'ty	Remarks
P-3-1	GP-025911-00	TOP SHAFT COVER				1	
P-3-2	GP-031128-00	Pulley Cover Bracket				1	
P-3-3	02025PR-UK02	Top Shaft Cover (C) Bracket L				3	
P-3-4	02031SC-7113	Hex. Socket Screw(M5*L10)			O	10	
P-3-5	18048SW-3115	Spring Washer (@5)			O	24	
P-3-6	16018SW-1111	Washer (@5)			O	8	
P-3-7	GP-030278-00	Top Shaft Pulley Cover	May,11,07 ~ May,30,07			1	
	GP-030278-01		May,31,07 ~				
P-3-8	15042SC-3123	Truss Screw (M4*L6)			O	7	
P-3-9	01001100UK00	Top Shaft Pulley Cover B				1	
P-3-10	09005SC-3123	Truss Screw (M3*L6)			O	4	
P-3-11	GP-029068-00	SURFACE COVER				1	
P-3-12	02015SC-7113	Hex.Socket Bolt(M4*L10)			O	11	
P-3-13	02028SW-9115	Spring Washer (@4)			O	15	
P-3-14	05009SW-1111	Washer (@4-L)			O	18	
P-3-15	GP-011777-00	Color Change Cover				1	
P-3-16	04006MC-9123	TRUSS SCREW(M4*L6) SUS			O	4	
P-3-17	GP-029085-00	BODY INSIDE COVER "L"				1	
P-3-18	02044SC-3123	Truss Screw (M5*L8)			O	8	
P-3-19	09000200H000	Upper Shaft Cover(L) Bracket				1	
	GP-025701-00	TOP SHAFT COVER(L)SET	Jan,19,07 ~			1	
	GP-025701-01	TOP SHAFT COVER(L)SET	Jul,27,10 ~				
P-3-20	GP-039231-00	Upper Shaft Cover(L)(SQ30)				1	
P-3-21	02014SC-7113	Hex. Socket Bolt (M4*L5)			O	1	
P-3-22	02015SC-7113	Hex.Socket Bolt(M4*L10)			O	1	
P-3-23	02001PM-UK14	Top SHAFT COVER "A"				1	
P-3-24	02005PM-UK14	Top SHAFT COVER "B"				2	
P-3-25	02036PM-UK14	Top SHAFT COVER "C"				2	
P-3-26	GP-011946-00	Color Change Bracket "A"				1	
P-3-27	02015SC-7113	Hex.Socket Bolt(M4*L8)			O	24	
P-3-28	02023ET-A001	Top Shaft Cover Magnet				12	

Q. Index

Part No.	Part Name	Page	Ref.No
01000500H000	Spool Stand Stud Bolt L113	57	I-1-5
01001100H000	Ball Bearing (6005Zz)	16	B-3-7
01001100H000	Ball Bearing (6005Zz)	35	E-3-9
01001100H000	Bearing (6005ZZ)	38	F-1-19
01001100H000	Bearing (6005ZZ)	40	F-3-24
01001100UK00	Top Shaft Pulley Cover B	91	P-3-9
01001500T000	Spool Stand (L=380)	57	I-1-6
01-002B-OT10	Pressing Plate for LCD	70	K-3-10
01-003B-SW63	DOOR LOCK	71	K-4-19
01003RB-UK01	Rubber	11	A-1-7
01-003S-BT01	Caution Sticker	69	K-2-3
01-004S-BT01	Fan Cleaning Sticker	68	K-1-31
01007SW-1111	Washer (10@)	59	I-3-6
01008SW-9115	SPRING WASHER(@10)	12	A-2-18
01-012A-AT10	Picker Sol. Cover	50	H-1-2
01-013A-AT10	Picker Sol. Base	50	H-1-9
01-016A-DU33	Speaker	70	K-3-24
01029BR-A001	Ball Bearing (6004Zz)	33	E-1-8
01102000B000	Bearing Collar	12	A-2-21
01-102B-OT10	Insulation Bush(B)	70	K-3-31
01300200H000	Oil Pump Adapter	27	C-7-5
01300300H000	Oil Pump Hose Insert	25	C-5-6
01300300H000	Oil Pump Hose Insert	25	C-5-17
01300300H000	Oil Pump Hose Insert	26	C-6-7
01300300H000	Oil Pump Hose Insert	26	C-6-16
01300300H000	Oil Pump Hose Insert	27	C-7-6
01300300H000	Oil Pump Hose Insert	27	C-7-16
01300400H000	Oil Pump Compression Sleeve	25	C-5-7
01300400H000	Oil Pump Compression Sleeve	25	C-5-18
01300400H000	Oil Pump Compression Sleeve	26	C-6-8
01300400H000	Oil Pump Compression Sleeve	26	C-6-17
01300400H000	Oil Pump Compression Sleeve	27	C-7-7
01300400H000	Oil Pump Compression Sleeve	27	C-7-17
01300500H000	Oil Pump Compression Bushing	25	C-5-8
01300500H000	Oil Pump Compression Bushing	25	C-5-19
01300500H000	Oil Pump Compression Bushing	26	C-6-9
01300500H000	Oil Pump Compression Bushing	26	C-6-18
01300500H000	Oil Pump Compression Bushing	27	C-7-8
01300500H000	Oil Pump Compression Bushing	27	C-7-18
01300600H000	Oil Pump Hose (@4)	27	C-7-9
01300900H000	Mos Metering Valve	25	C-5-14
01300900H000	Mos Metering Valve	26	C-6-2
01301000H000	Valve Junction Connect Hose	26	C-6-3
01301100H000	Bed Oil Supply Hose "A"	26	C-6-10
01301200H000	Bed Oil Supply Hose "B"	26	C-6-11
01301300H000	Bed Oil Compression Sleeve	25	C-5-20
01301400H000	Bed Oil Compression Bushing	25	C-5-21
01301400H000	Bed Oil Compression Bushing	26	C-6-12
01301600H000	Hook Oil Supply Nipple	12	A-2-22
01301600H000	Hook Oil Supply Nipple	25	C-5-33
01301900H000	Close Plug (M8*1.0)	25	C-5-31
01301900H000	Close Plug (M8*1.0)	26	C-6-22

Part No.	Part Name	Page	Ref.No
01302000H000	Mos Metering Valve (Mos-1)	25	C-5-15
01302210H000	Stop Valve (1/8)	27	C-7-12
01302400H000	Stop Valve Adapter Hose (@4)	25	C-5-9
01302400H000	Stop Valve Adapter Hose (@4)	26	C-6-14
01302400H000	Stop Valve Adapter Hose (@4)	27	C-7-19
01302600H000	Stop Valve Adapter	26	C-6-13
01302600H000	Stop Valve Adapter	27	C-7-15
01302700H000	Mos Metering Valve Junction	26	C-6-1
01302700U000	Mos Metering Valve Junction	25	C-5-10
01302800HD00	Mos Valve Junction Hose @4	25	C-5-16
01302900H000	Needle Bar Supply Hose	25	C-5-22
01303110H000	Elbow Tube End (E*0.3*2.4)	25	C-5-28
01303200H000	Take-Up Lever Oil Supply Hose	25	C-5-32
01303300H000	Needle Bar Driving Shaft Hose	25	C-5-34
01303500H000	Needle Bar Pin Supply Hose	27	C-7-20
01303600H000	Needle Bar Oil Hose Holder	25	C-5-23
01303800H000	Hose	25	C-5-5
01303800H000	Hose	26	C-6-19
01303900H000	Oil Distribution Junction	25	C-5-1
01303900H000	Oil Distribution Junction	26	C-6-15
02-0000-EMB1	Head On/Off S/W Board 9C,15C	80	M-2-15
02000100T000	MAGNETIC SWITCH SET	76	L-4-12
02000200B000	Y-Driver(4,6Head)	69	K-2-31
02000400B000	CABLE COVER HOLDER	74	L-2-6
02000400T000	Cable Grand *Dac1-11)	76	L-4-4
02000600T000	Cable Grand (Dapg-36)	76	L-4-3
02000800T000	Emergency Switch Set	77	L-5-11
02000910T000	MAGNETIC S/W FIXED BRACKET	76	L-4-10
02001300T000	BRACKET STOPPER (CE)	76	L-4-11
02-001B-SW67	Switch Cover	69	K-2-6
02001PM-UK14	Top SHAFT COVER "A"	91	P-3-23
02002SC-7119	Plus Screw (M4*L8)	79	M-1-3
02002SC-7119	Plus Screw (M4*L8)	23	C-3-2
02004SC-4113	Hex. Socket Bolt (M4*L8)	63	J-1-22
02005PM-UK14	Top SHAFT COVER "B"	91	P-3-24
02006PR-UK14	COVER PLATE (R) 15C	81	M-3-3
02008LA-UK12	Switch Base	77	L-5-7
02008SC-4122	Needle Plate Bracket Screw	31	D-3-2
02-009A-8180	Bearing (6005NR)	40	F-3-27
02009PI-T121	Spring Pin	31	D-3-4
02009PR-UK12	Cover Plate Uk1502-45	81	M-3-5
02009SC-A001	Side Cover Screw	22	C-2-3
02009SC-A001	Side Cover Screw	54	H-4-3
02010AF-3123	Truss Bolt (M4*L8)	19	B-5-14
02010AF-3123	Truss Screw (M4*L8)	75	L-3-11
02010SC-3123	Truss Bolt (M4*L10)	39	F-2-20
02010SC-3123	Truss Screw (M4*L8)	76	L-4-6
02010SC-3123	Truss Screw (M4*L8)	80	M-2-11
02010SC-3123	Truss Screw (M4*L8)	84	N-2-19
02010SC-A001	SCREW (9/64,N40,L8)	15	B-2-2
02011SC-3125	Rotary Hook Support Screw	51	H-2-11
02014SC-4113	Socket Bolt (M4*L5)	65	J-2-15

Part No.	Part Name	Page	Ref.No
02014SC-7113	Hex. Socket Bolt (M4*L5)	91	P-3-21
02015SC-4113	Hex. Socket Bolt (M4*L10)	19	B-5-4
02015SC-4113	Hex. Socket Bolt (M4*L10)	39	F-2-12
02015SC-7113	Hex.Socket Bolt(M4*L10)	30	D-2-14
02015SC-7113	HEX.SOCKET BOLT(M4*L10)	33	E-1-35
02015SC-7113	Hex.Socket Bolt(M4*L10)	50	H-1-11
02015SC-7113	Hex.Socket Bolt(M4*L10)	52	H-3-34
02015SC-7113	Hex.Socket Bolt(M4*L10)	58	I-2-5
02015SC-7113	Hex.Socket Bolt(M4*L10)	58	I-2-17
02015SC-7113	Hex.Socket Bolt(M4*L10)	59	I-3-23
02015SC-7113	Hex.Socket Bolt(M4*L10)	76	L-4-8
02015SC-7113	Hex.Socket Bolt(M4*L10)	91	P-3-12
02015SC-7113	Hex.Socket Bolt(M4*L10)	91	P-3-22
02015SC-7113	Hex.Socket Bolt(M4*L8)	91	P-3-27
02015SC-7113	Screw(M4*L10)	15	B-2-5
02017PM-A001	Cable Ring	77	L-5-17
02017PM-A001	Cable Ring	73	L-1-5
02023ET-A001	Top Shaft Cover Magnet	91	P-3-28
02023SC-7113	Hex. Socket Bolt (M4*L8)	23	C-3-26
02023SC-7113	Hex. Socket Bolt (M4*L8)	25	C-5-30
02023SC-7113	Hex. Socket Bolt (M4*L8)	27	C-7-11
02023SC-7113	Hex. Socket Bolt (M4*L8)	53	H-3-42
02023SC-7113	Hex. Socket Bolt (M4*L8)	81	M-3-2
02023SC-7113	Hex.Socket Bolt (M4*L8)	53	H-3-45
02023SC-7113	Hex.Socket Bolt (M4*L8)	55	H-5-2
02023SC-7113	Hex.Socket Bolt (M4*L8)	80	M-2-8
02023SC-7113	Hex.Socket Bolt(M4*L5)	46	G-2-17
02023SC-7113	Screw (M4*L8)	65	J-2-25
02023SC-7113	Screw (M4*L8)	66	J-3-4
02024LA-UK14	S/B Switch Base	77	L-5-2
02025PR-UK02	Top Shaft Cover (C) Bracket L	91	P-3-3
02026EL-UK01	Start Switch Set	77	L-5-14
02026SC-A001	Stand	86	O-1-17
02027EL-UK01	S/B Switch Set	77	L-5-13
02028LA-UK14	Emergency Switch Base	77	L-5-6
02028SW-9115	Spring Washer	39	F-2-7
02028SW-9115	Spring Washer	39	F-2-13
02028SW-9115	Spring Washer (@4)	30	D-2-15
02028SW-9115	SPRING WASHER (@4)	33	E-1-36
02028SW-9115	Spring Washer (@4)	48	G-4-8
02028SW-9115	Spring Washer (@4)	58	I-2-6
02028SW-9115	Spring Washer (@4)	58	I-2-18
02028SW-9115	Spring Washer (@4)	59	I-3-24
02028SW-9115	Spring Washer (@4)	91	P-3-13
02029SN-9311	Hex. Nut (M4-No2)	31	D-3-23
02030SC-T121	Bed Cover Screw(9/64" 40)	59	I-3-34
02030SW-B001	Washer (5@)	16	B-3-9
02031SC-4113	Hex. Socket Bolt (M5*L10)	40	F-3-14
02031SC-4113	Socket Bolt (M5*L10)	65	J-2-9
02031SC-7113	Hex. Socket Bolt (M5*L10)	35	E-3-24
02031SC-7113	Hex. Socket Screw(M5*L10)	16	B-3-8
02031SC-7113	Hex. Socket Screw(M5*L10)	74	L-2-2

Q. Index

Part No.	Part Name	Page	Ref.No
02031SC-7113	Hex. Socket Screw(M5*L10)	75	L-3-3
02031SC-7113	Hex. Socket Screw(M5*L10)	91	P-3-4
02036PM-UK14	Top SHAFT COVER "C"	91	P-3-25
02044SC-3123	Truss Bolt (M5*L8)	64	J-1-41
02044SC-3123	Truss Screw (M5*L8)	11	A-1-5
02044SC-3123	Truss Screw (M5*L8)	24	C-4-11
02044SC-3123	Truss Screw (M5*L8)	76	L-4-2
02044SC-3123	Truss Screw (M5*L8)	84	N-2-7
02044SC-3123	Truss Screw (M5*L8)	89	P-1-5
02044SC-3123	Truss Screw (M5*L8)	90	P-2-9
02044SC-3123	Truss Screw (M5*L8)	91	P-3-18
02053PR-UK01	Cable Clamp	74	L-2-11
02054PR-A001	Main Motor Pulley Cover	89	P-1-6
02054RB-UK01	Clamp Rubber	74	L-2-10
02062PR-UI12	Cable Holder	77	L-5-8
02065SC-3328	Tapping Screw (M3*L10)	74	L-2-5
02088PR-UK01	Power Switch Cover	76	L-4-5
02100400U000	Mes Driving Lever	31	D-3-9
02101800B000	Plate Led S/W Board Cable	80	M-2-14
02101ET-UK01	Brand Mark	11	A-1-4
02102200U000	Plate To B/B Cable	80	M-2-13
02103ET-UK01	Emergency Switch Sticker	77	L-5-10
02105000E040	Cable(Ce4Ht-50)	75	L-3-13
02105600U060	Cable (Sh-56-4)	73	L-1-7
02105700U060	Cable (Sh-57-4)	73	L-1-6
02105900U000	Sh-59	73	L-1-10
02106000U060	Cable (Sh-60-4)	73	L-1-8
02106400U000	Emergency S/W Cable	77	L-5-12
02106400U040	Cable (Sh-64-2)	34	E-2-6
02106500U040	Sh-65-2	34	E-2-5
03000100UK60	Top Shaft "A" (L1505.5)	35	E-3-17
03000200UK60	Top Shaft "B" (L1800)(UK1506)	35	E-3-20
03000500U000	Hook Oil Supply Nipple	14	B-1-16
03000500U000	Hook Oil Supply Nipple	18	B-4-4
03000710F000	Low Shaft Coupling	35	E-3-23
03002610H000	Return Spring Stopper	52	H-3-29
03002700H000	Return Spring	52	H-3-31
03002800H000	Return Spring Stopper Washer	52	H-3-32
03002900H000	Return Spring Fix Pin Washer	52	H-3-35
03003000H000	Return Spring Fix Pin	52	H-3-33
03003300H000	Cam Shaft Fixing Block	52	H-3-6
03003500H000	Motor Driving Cam Shaft	52	H-3-10
03003810H000	Stud Bolt For Driving Plate	52	H-3-16
03003910H000	Upper Thread Driving Plate	52	H-3-11
03003SC-4113	Hex. Socket Bolt	14	B-1-2
03004100H000	Driving Plate Block	52	H-3-15
03004400H000	Motor Driving Connect Bearing	52	H-3-23
03004500H000	Connecting Plate Pin Washer	52	H-3-22
03004800H000	Connecting Plate Knuckle	52	H-3-24
03004SC-4517	Hook Shaft Collar Screw (15/64" n=28)	12	A-2-12
03005210H000	Bearing Stopper Collar	35	E-3-10
03005MC-3123	TRUSS SCREW (M3*L5)	55	H-5-17

Part No.	Part Name	Page	Ref.No
03007000UK60	Upper Thread Driving Shaft A (L1400) @8	52	H-3-36
03007SC-A001	Cam Base Screw	16	B-3-2
03008000H000	Ball Bearing 6800	18	B-4-14
03008100K000	Needle Bar Drive Bearing Bush	18	B-4-15
03008300H000	Connecting Plate Stud Screw A	52	H-3-21
03008300I000	Arm Guard Plate(L) Bracket	22	C-2-2
03008600H000	Motor Cover Fixing Bracket	53	H-3-48
03010SR-4013	C-Ring (@47)	35	E-3-8
0301200U000	Low Shaft Support Bracket	33	E-1-1
03013EL-T121	Encoder Set	24	C-4-1
03016SC-4113	Hex. Socket Bolt (M5*L15)	16	B-3-11
03016SC-4113	Hex. Socket Bolt (M5*L15)	26	C-6-4
03016SC-4113	Hex. Socket Bolt (M5*L15)	58	I-2-9
03016SC-4113	Hex. Socket Bolt (M5*L15)	75	L-3-2
03016SC-4113	HEX. SOCKET BOLT(M5*L15)	59	I-3-12
03020SC-A001	Drive Pin Screw 11/64,N40,L8	15	B-2-10
03020SC-A001	Drive Pin Screw 11/64,N40,L8	18	B-4-5
03020SC-A001	Drive Pin Screw 11/64,N40,L8	48	G-4-11
03022SC-4517	Hex. Socket Set Screw(M4*L5)	43	G-1-7
03022SC-4517	Hex. Socket Set Screw(M4*L5)	51	H-2-13
03022SC-4517	Hex.Socket Set Screw(M4*L5)	14	B-1-11
03025SW-1211	Washer (@6)	16	B-3-20
03025SW-1211	Washer (@6)	18	B-4-17
03025SW-1211	Washer (@6)	25	C-5-4
03025SW-1211	Washer (@6)	25	C-5-13
03025SW-1211	Washer (@6)	27	C-7-4
03025SW-1211	Washer (@6)	29	D-1-7
03026SW-9115	Spring Washer (@6)	16	B-3-21
03026SW-9115	Spring Washer (@6)	18	B-4-18
03026SW-9115	Spring Washer (@6)	25	C-5-3
03026SW-9115	Spring Washer (@6)	25	C-5-12
03026SW-9115	Spring Washer (@6)	27	C-7-3
03026SW-9115	Spring Washer (@6)	29	D-1-6
03026SW-9115	Spring Washer (@6)	35	E-3-6
03027SN-A001	Stud Nut	16	B-3-22
03027SN-A001	Stud Nut	18	B-4-19
03030SW-1211	Washer	19	B-5-6
03030SW-1211	Washer	39	F-2-8
03030SW-1211	Washer	39	F-2-14
03031SN-A001	Nut (11/64" n=40)	18	B-4-20
03031SN-A001	Pin. Nut (11/64,N=40)	23	C-3-12
03031SN-A001	Pin. Nut (11/64,N=40)	58	I-2-13
03031SN-A001	Pin. Nut (11/64,N=40)	79	M-1-13
03033CW-A001	Driver Pin	18	B-4-9
03034SW-A001	Reciprocator Washer	18	B-4-7
03042SF-T121	FELT "A"	18	B-4-13
03050SC-4517	Hex. Socket Set Screw (M3*L3)	31	D-3-17
03050SC-4517	Set Screw (M3*L3)	19	B-5-8
03056CL-B001	Head Rail Holder	15	B-2-8
03057SC-A001	Head Rail Holder Screw	15	B-2-9
03062ET-A001	Cable Fastener	15	B-2-11
03065SC-A001	Guard Plate Screw	22	C-2-5

Part No.	Part Name	Page	Ref.No
03069LM-B002	Lm Guide Block Set	21	C-1-1
03071SC-4113	Hex. Socket Bolt (M3*L10)	39	F-2-6
03071SC-A001	Hex.Scoket Bolt (M3*L15)	21	C-1-2
03101400U000	Upper Shaft Support Cover	35	E-3-12
03201400UK40	Cable Bushing Fixed Plate	65	J-2-14
03300613H000	Take-Up Guide Rail L=250	21	C-1-6
03302100A000	Pin Collar	14	B-1-10
03302900H000	NEEDLE CASE (KT-42469)	16	B-3-3
03303000H000	Connecting Rod	16	B-3-4
03304200I000	Lever Spring	22	C-2-7
03304300I000	Lever Spring Bush.	22	C-2-8
03304400I000	Thread Holding Push Plate	22	C-2-9
03304900H000	Jump Clutch Lever Stopper	23	C-3-20
03410200H000	Jump Motor	23	C-3-1
03410300H000	Jump Crank Stopper	23	C-3-7
03410800I000	Jump Return Spring	23	C-3-13
03410900H000	Jump Driving Clutch	23	C-3-25
03411000H000	Jump Clutch Pin	23	C-3-27
03411100I000	Jump Clutch Base	23	C-3-16
03411200I000	Jump Driving Clutch Lever	23	C-3-23
03411300H000	Jump Clutch Lever Stud Bolt	23	C-3-29
03411300H000	Stud for Jump Clutch Lever	23	C-3-24
03411400H000	Stud for Jump Crank Stopper	23	C-3-8
03411900H000	Jump Clutch Plate Spring	23	C-3-28
03500000DM60	Wiper Assy	55	H-5-18
03500110H000	Upper Thread Catcher Base	55	H-5-1
03500210H000	Upper Thread Hook Base Cover	55	H-5-16
03500330H000	Upper Thread Hook	55	H-5-15
03500500H000	Upper Catcher Driving Lever	55	H-5-10
03500600H000	Driving Lever Pin	55	H-5-11
03500700H000	Driving Lever Pin Collar	55	H-5-12
03500800H000	Driving Lever Pin Washer	55	H-5-14
03500900H000	Clutch Block	55	H-5-5
03501000H000	Clutch Stud Screw	55	H-5-6
03501100H000	Clutch Spring	55	H-5-7
03501200H000	Clutch Dial	55	H-5-8
03700200H000	MES DRIVING CRANK	30	D-2-1
03700500H000	Mes Driving Link Screw	30	D-2-6
03700600H000	Mes Shaft Driving Clamp	30	D-2-7
03700800H000	Mes Driving Shaft Guide	30	D-2-23
03701000H000	Ball Bearing (6001Z)	30	D-2-3
03701100H000	Mes Driving Shaft Bush	30	D-2-27
03701200H000	Motor Driving Nob	29	D-1-12
03701300H000	SENSOR ASSY TLP1204 (C1)	30	D-2-17
038A0000DM00	Take-up Driving Lever A,B Assy	14	B-1-20
04000104uk00	Switch Base Holder	77	L-5-1
04000630I000	Bearing (6905ZZ)	38	F-1-18
04001700H000	Coupling	40	F-3-9
04-003S-AU10	Warning Sticker	69	K-2-4
04006MC-9123	TRUSS SCREW(M4*L6) SUS	91	P-3-16
04010MC-7113	Hex.Scoket Bolt (M4*L10)	23	C-3-21
04010MC-7113	Hex.Socket Bolt (M4*L10)	79	M-1-12

Q. Index

Part No.	Part Name	Page	Ref.No
04012AF-A001	Hook Shaft Bush Screw	47	G-3-15
04013PR-B001	WASHER (3.2T,@10)	12	A-2-16
04014PR-B001	WASHER (2T,@10)	12	A-2-17
04014SC-4517	Hex.Socket Set Screw(M5*L5)	47	G-3-6
04014SC-4517	Hex.Socket Set Screw(M5*L5)	52	H-3-9
04014SC-4517	Hex.Socket Set Screw(M5*L5)	55	H-5-13
04014SC-4517	Hex.Socket Set Screw(M5*L5)	34	E-2-8
04014SC-4517	Hex.Socket Set Screw(M5*L5)	57	I-1-7
04014SC-4517	Hook Shaft Collar Screw (M5*L5)	12	A-2-4
04016AF-A001	Cam Collar Screw	12	A-2-3
04019CW-T121	Pin Stud Screw	14	B-1-7
04020AF-T121	Roller for Take-Up Lever B	14	B-1-8
04021BR-T121	Needle Bearing (KT367N IKO)	14	B-1-9
04026BR-A001	Ball Bearing 6003Z	12	A-2-2
04026SC-T121	Needle Plate Pin	31	D-3-7
04028SC-UK01	STUD BOLT (M10*P1.25*L69)	12	A-2-15
04029SW-A001	Stud Bolt Washer(S) (@8)	14	B-1-4
04029SW-A001	Stud Bolt Washer(S) (@8)	29	D-1-4
04029SW-A001	STUD BOLT WASHER(S) (@8)	33	E-1-17
04030MC-4113	HEX.SOCKET BOLT(M4*L30)	59	I-3-30
04032SN-A001	Hex. Nut (M8-No2)	52	H-3-17
04032SN-A001	Hex. Nut (M8-No2)	52	H-3-28
04032SN-UK01	HEX. NUT (M10*P1.25)	12	A-2-19
04033AF-D002	Rotary Hook Set	51	H-2-20
04034AF-A001	Bobbin Case Set	51	H-2-18
04035AF-A001	Bobbin	51	H-2-19
04037SC-A001	Picker Bracket Screw(R)	31	D-3-3
05000005U000	Color Change Roller Base Assy	47	G-3-29
05000210T000	TRANSFORMER (EMT25V) 1A/25.5V	76	L-4-9
05001700U000	Table Support Plate	59	I-3-2
05007SC-4113	Hex. Socket Bolt (M3*L5)	39	F-2-18
05007SC-7113	Hex. Socket Bolt (M3*L5)	25	C-5-24
05007SC-7113	Hex. Socket Bolt (M3*L5)	25	C-5-26
05007SC-7113	Hex.Scoket Bolt (M3*L5)	22	C-2-12
05008100UK40	Table Fixing Block	59	I-3-29
05008MC-4517	Hex.Socket Bolt(M5*L8)	52	H-3-7
05008SC-4113	Hex.Socket Bolt (M4*L16)	43	G-1-2
05008SC-4113	Hex.Socket Bolt (M4*L16)	47	G-3-2
05008SC-4113	Hex.Socket Bolt (M4*L16)	48	G-4-7
05008SC-4113	Hex.Socket Bolt (M4*L16)	52	H-3-30
05008SC-4113	Hex.Socket Bolt (M4*L16)	58	I-2-8
05009SW-1111	Washer (@4-L)	48	G-4-9
05009SW-1111	Washer (@4-L)	59	I-3-25
05009SW-1111	Washer (@4-L)	79	M-1-15
05009SW-1111	Washer (@4-L)	91	P-3-14
05012MC-7113	Fixed Screw	84	N-2-16
05014SC-7113	Hex. Socket Bolt (M4*L25)	27	C-7-13
05015CW-A001	Head Base Pin(@5*L15)	43	G-1-6
05016SN-1211	Hex.Nut (M4)	80	M-2-12
05019SC-A001	Needle Bar Cover Screw (M5*L6)	43	G-1-9
05021PM-H001	Presser Foot Spring Guide	43	G-1-17
05021SF-A001	FELT	43	G-1-10

Part No.	Part Name	Page	Ref.No
05022SW-A001	SPRING SHOE WASHER	44	G-1-26
05023RB-A001	Needle Bar Cushion Rubber "A"	43	G-1-11
05024RB-A001	Needle Bar Cushion Rubber "B"	43	G-1-12
05026SC-4113	Stopper Screw (9/64-11.5)	43	G-1-14
05026SC-H001	Presser Foot Bolt	44	G-1-22
05027PR-H001	PRESSER FOOT HOLDER WASHER	44	G-1-23
05028SC-4113	HOLDER SCREW (9/64-L8)	23	C-3-10
05028SC-4113	Holder Screw (9/64-L8)	43	G-1-16
05037DB-A001	Needle (Db-K5, #11)	44	G-1-33
05041SC-A001	Bolt (9/64 n=40)	46	G-2-19
05041SC-A001	Guide Rail Screw	21	C-1-7
05045MC-7113	HEX.SOCKET BOLT (M5*L45)	26	C-6-6
05062SC-A001	Bolt (9/64" n=40)	15	B-2-7
05062SC-A001	Thread Guide (M) Screw (9/64 n=40)	46	G-2-4
05070SC-3123	Head Face Plate (U) Screw	46	G-2-5
05070SC-3123	HEAD FACE PLATE (U) SCREW	46	G-2-9
05070SC-3123	Truss Bolt 9/64 n=40	46	G-2-12
05363SC-A001	Needle Fixed Screw (A/S)	44	G-1-32
05452CM-A001	EYELET "A"	79	M-1-11
05452CM-A001	Thread Guide Bushing	86	O-1-12
06000102UK60	Color Change Shaft "A" (@6,L1318.5) (9C)	47	G-3-24
06000102UK60	Color Change Shaft "A" (@6,L1318.5) (6C)	47	G-3-24
06000202UK60	Color Change Shaft "B" (@6,L1318.5 (6C)	47	G-3-28
06-001C-SE50	Fixing Screw for Drive	69	K-2-33
06-001C-SE50	Fixing Screw for Trimming Driver Radiator(A)	69	K-2-19
06003SW-2111	Washer (@4)	23	C-3-6
06003SW-2111	Washer (@4)	43	G-1-2
06003SW-2111	Washer (@4)	58	I-2-7
06003SW-2111	Washer (@4)	58	I-2-19
06003SW-2111	Washer (@4)	80	M-2-9
06010AF-8118	Plus Screw(M3*L4)	50	H-1-10
06010SC-8118	Plus Screw (M3*L4)	54	H-4-10
06011SW-2111	Washer (@3)	22	C-2-13
06011SW-2111	Washer (@3)	23	C-3-15
06011SW-2111	Washer (@3)	23	C-3-19
06011SW-2111	Washer (@3)	23	C-3-22
06011SW-2111	Washer (@3)	24	C-4-4
06011SW-2111	Washer (@3)	25	C-5-27
06011SW-2111	Washer (@3)	30	D-2-11
06011SW-2111	Washer (@3)	30	D-2-19
06011SW-2111	Washer (@3)	65	J-2-12
06025MC-7113	Hex.Socket Bolt(M6*L25)	29	D-1-5
06025MC-7113	HEX.SOCKET BOLT(M6*L25)	33	E-1-5
06025MC-7113	Hex.Socket Bolt(M6*L25)	52	H-3-3
06025MC-7113	Hex.Socket Bolt(M6*L25)	54	H-4-11
06060MC-4517	Bolt (M6*L6)	63	J-1-18
06-129A-106L	Needle Bearing (IKO TLA810Z)	37	F-1-5
07-004S-SM5S	Fixing Screw for 24V SMPS(Set)	68	K-1-24
07-004S-SM5S	Fixing Screw For Connect Board(Set)	68	K-1-7
07-004S-SM5S	Fixing Screw for Digital SMPS(Set)	68	K-1-20
07-004S-SM5S	Fixing Screw for Drive Fixing Bracket A(Set)	69	K-2-34
07-004S-SM5S	Fixing Screw for Driver Fixing Plate(Set)	69	K-2-10

Part No.	Part Name	Page	Ref.No
07-004S-SM5S	Fixing Screw for J/B Fixing Bracket(Set)	69	K-2-16
07-004S-SM5S	Fixing Screw for SMPS Bracket(A)(Set)	68	K-1-21
07-004S-SM5S	Fixing Screw for SMPS Bracket(B)(Set)	68	K-1-25
07-004S-SM5S	Fixing Screw for SMPS Connect Board(Set)	68	K-1-19
07-004S-SM5S	Fixing Screw for Surge Protector(Set)	68	K-1-9
07-004S-SM5S	Fixing Screw for Trimming Driver Bracket A(Set)	69	K-2-27
07-004S-SM5S	Fixing Screw Noise Filter(Set)	68	K-1-5
07-004S-SM5S	Ground Screw for Connect Plate(Set)	68	K-1-10
07-004S-SM5S	Rear Cover Fixing Screw (M4xL10)	71	K-4-21
07-004S-SM5S	Screw for Fixing Bracket for OP	70	K-3-3
07005BM-B002	Take-Up Lever Set	46	G-2-11
07005BM-B002	Take-Up Lever Set	46	G-2-13
07-005S-SM5S	CPU Board Screw (SET)(M3xL10)	70	K-3-17
07-005S-SM5S	IO Board Fixing Screw (SET)	70	K-3-21
07006LA-UK01	Mes Connecting Link	31	D-3-18
07009AF-4517	Set Screw (M5*L6)	19	B-5-11
07009SC-4517	Hex. Socket Bolt(M5*L6)	44	G-1-35
07009SC-4517	Hex.Socket Set Screw (M5*L6)	58	I-2-11
07016SC-4113	Bolt (M4*L12)	19	B-5-18
07016SC-4113	Socket Bolt (M4*L10)	63	J-1-13
07016SC-4113	Socket Bolt (M4*L10)	66	J-3-8
07016SC-7113	Hex.Scoket Bolt (M4*L10)	23	C-3-4
07016SC-7113	Hex.Socket Bolt(M4*L12)	14	B-1-6
07018SC-8118	Plus Screw (M3*L8)	31	D-3-16
07018SC-8118	Plus Screw (M3*L8)	51	H-2-6
07018SC-8118	Plus Screw (M3*L8)	54	H-4-9
07021MP-T121	Lever Shaft Bush	31	D-3-20
07023CW-T121	Lever Pin "A"	31	D-3-21
07024BR-UK01	Fiber Washer(@8)	64	J-1-30
07024BR-UK01	Washer (φ8)	37	F-1-2
07026AD-A002	Take-Up Guide Rail L=250	21	C-1-5
07028PR-T121	Moving Mes	31	D-3-10
07032CL-T121	Fixed Mes	31	D-3-14
07033PR-T121	Under Thread Presser	31	D-3-15
07035SC-7113	Bracket Screw (M3*L6)	24	C-4-2
07035SC-7113	BRACKET SCREW (M3*L6)	52	H-3-38
07035SC-7113	Hex.Scoket Bolt (M3*L6)	22	C-2-10
08000805I000	TENSION PLATE COVER	81	M-3-6
08-002M-sw67	Stud for Trimming Driver(A)	69	K-2-22
08006SC-8118	Plus Screw (M3*L5)	23	C-3-14
08006SC-8118	Plus Screw (M3*L5)	47	G-3-10
08011SC-8118	Screw (M2*L4)	80	M-2-6
08011SW-1111	Spring Washer (@3-S)	24	C-4-3
08012CW-T121	Connecting Plate Stud Screw	50	H-1-12
08014AF-A001	Plus Screw (M3*L8)	51	H-2-16
08014SC-A001	Fixed Screw	39	F-2-10
08014SC-A001	Plus Screw (M3*L8)	31	D-3-11
08027BR-A001	Trust Bearing 1528 (NTN)	38	F-1-26
08028BR-A001	Trust Washer (AS1528)	37	F-1-3
08041SW-1111	Washer	40	F-3-8
08041SW-1111	Washer (@8-S)	33	E-1-24
08041SW-1111	WASHER (@8-S)	35	E-3-4

Q. Index

Part No.	Part Name	Page	Ref.No
08053PR-A001	Lever Washer	30	D-2-16
08057SW-1111	Washer (@6)	33	E-1-4
08057SW-1111	Washer (@6)	33	E-1-33
08057SW-1111	Washer (@6)	34	E-2-12
08057SW-1111	Washer (@6)	34	E-2-15
08057SW-1111	WASHER (@6)	35	E-3-7
08057SW-1111	Washer (@6)	52	H-3-5
08057SW-1111	Washer (@6)	77	L-5-5
08058SN-1311	Hex. Nut (M6-No3)	34	E-2-16
08062SC-7113	Hex. Socket Bolt (M5*L20)	30	D-2-8
08062SC-7113	HEX. SOCKET BOLT (M5*L20)	34	E-2-2
08062SC-7113	Hex. Socket Bolt (M5*L20)	34	E-2-17
08065CW-A001	Stopper Collar	30	D-2-24
08067RB-A001	O-Ring (@10)	30	D-2-26
08070SW-9115	Spring Washer (@5)	63	J-1-5
08070SW-9115	Spring Washer (@5)	63	J-1-10
08070SW-9115	Spring Washer (@5)	65	J-2-21
08076SC-7113	Hex. Socket Bolt (M5*L12)	24	C-4-6
08076SC-7113	Hex. Socket Bolt (M5*L12)	74	L-2-7
08076SC-7113	HEX. SOCKET BOLT(M5*L12)	59	I-3-28
08087SC-7113	HEX. SOCKET BOLT (M8*L25)	35	E-3-2
08091SC-7113	Hex. Socket Bolt (M6*L20)	33	E-1-2
08091SC-7113	Hex. Socket Bolt (M6*L20)	35	E-3-19
08091SC-7113	Hex. Socket Bolt (M6*L20)	40	F-3-10
08091SC-7113	HEX. SOCKET BOLT (M6*L20)	34	E-2-10
08091SC-7113	Hex. Socket Bolt (M6*L20)	38	F-1-21
08101SC-8329	Tapping Screw (M3*L16)	59	I-3-17
08101SC-8329	Tapping Screw (M3*L16)	60	I-4-15
08102300B000	Half Turn Sensor (Gp1S51V)	47	G-3-9
08103102C010	Color Change Roller Base (6C)	47	G-3-16
08113SC-A001	Collar Screw	47	G-3-8
08113SC-A001	Collar Screw	47	G-3-22
08113SC-A001	Collar Screw	48	G-4-5
08113SC-A001	COLLAR SCREW 11/64,N=40,L6	16	B-3-17
08122CW-A001	MES PIN	31	D-3-12
08122CW-UK01	Lever Pin "B"	31	D-3-22
08123CW-T121	MOVING MES CONNECTING LINK PIN	31	D-3-13
08200503A000	Take-Up Lever Shaft (9C)	44	G-1-34
08200800A000	Take-Up Lever Shaft Bush(R)	46	G-2-15
08203000A000	Take-Up Lever Shaft Bush(L)	46	G-2-14
08300005I000	TENSION UNIT PLATE Assy	79	M-1-17
08300105I000	TENSION UNIT PLATE	79	M-1-1
08300205I000	BOARD BASE	80	M-2-7
08300305I000	CONNECTION PLATE "A"	81	M-3-7
08300400A000	Lamp Cover	80	M-2-16
08300405I000	CONNECTION PLATE "B"	81	M-3-7
08300705I000	ROLLER BASE	80	M-2-1
08310000B000	TENSION ADJUSTING SET	79	M-1-5
08320000I000	SUB TENSION ADJUSTING SET	79	M-1-4
08500200C000	Presser Foot Driving Motor	19	B-5-2
08600005B000	Upper Thread Presser Base Assy	54	H-4-12
09000200H000	Upper Shaft Cover(L) Bracket	91	P-3-19

Part No.	Part Name	Page	Ref.No
09000700B000	Ballast	75	L-3-6
09001400BT00	CEMENT RESISTANCE (4.7/20W)	76	L-4-13
09005SC-3123	Truss Bolt (M3*L5)	46	G-2-8
09005SC-3123	Truss Screw (M3*L6)	79	M-1-7
09005SC-3123	Truss Screw (M3*L6)	79	M-1-9
09005SC-3123	Truss Screw (M3*L6)	80	M-2-17
09005SC-3123	Truss Screw (M3*L6)	81	M-3-8
09005SC-3123	Truss Screw (M3*L6)	91	P-3-10
09007SC-7113	Hex. Socket Bolt (M3*L12)	30	D-2-18
09-023C-SC53	Q.C Passed Sticker	68	K-1-34
09-023C-SC53	QC Passed Sticker	70	K-3-35
09027ET-T151	Velcro	54	H-4-6
09029PR-T151	Presser Base Cover	54	H-4-8
09038CW-A001	Thread Presser Space	54	H-4-7
09040PR-A001	Bracket (L)	54	H-4-1
09041PR-A001	Bracket (R)	54	H-4-2
09044PR-A001	Upper Thread Holder Disk Set	54	H-4-4
09052PR-T151	Upper Thread Presser Base	54	H-4-5
09100200U000	Fixed Clip Bracket Screw	83	N-1-9
10000000UK60	Spool Plate Assy	57	I-1-15
10000100A000	Thread Guide L=200	57	I-1-9
10000310A000	Washer T=0.3,0.5,0.8,1.2,1.6	60	I-4-16
10-001C-AT10	Insulation Bush(A)	70	K-3-31
10-002S-SW66	IO Board Screw (SET)(M3XL8)	70	K-3-34
10-003M-PT01	Fixing Screw (M4xL8)	71	K-4-14
10-003M-PT01	Fixing Screw for Front Cover(Truss)	69	K-2-2
10-003M-PT01	Fixing Screw for Rear Cover(Truss)	69	K-2-8
10-003S-SW66	Spring Washer	68	K-1-12
10-004M-SW68	Fixing Screw for Trimming Driver Radiator(B)	69	K-2-21
10-004S-SW66	Washer	68	K-1-13
10-007A-5050	Main Driver (QS1L03AA)	69	K-2-29
10-007A-5050	X-Driver (QS1L03AA)	69	K-2-30
10-007A-5050	Y-Driver (QS1L03AA)(2Head)	69	K-2-31
10009EL-A002	UPPER THREAD CATCHER SOL.	22	C-2-11
10009EL-T121	Picker Sol.	50	H-1-1
10010SC-8119	Plus Screw (M3*L5)	84	N-2-10
10011SP-A001	Sol. Spring	50	H-1-5
10-012M-PT10	Stud for Joint Board	69	K-2-14
10-012M-PT10	Stud for Trimming Driver(B)	69	K-2-24
10012RB-A001	Cushion Washer	50	H-1-7
10-016M-SW66	Fixing Screw for Transformer A	68	K-1-11
10-021M-SW66	Fixing Screw for Joint Board(Set)	69	K-2-15
10-021M-SW66	Fixing Screw for Trimming Driver (Set)	69	K-2-26
10021SC-A001	Sol. Stud Screw	50	H-1-4
10-028S-SC53	Fixing Screw for SB DDC Radiator(SET)(M3xL7)	70	K-3-29
10-028S-SC53	Inverter Fixing Plate(M3xL7)	70	K-3-33
10-028S-SC53	Screw for Pressing Plate (M3xL7)	70	K-3-12
10-028S-SC53	Speaker Fixing Screw	70	K-3-25
10-042M-AU10	Fixing Screw for Drive Fixing Bracket B(Set)	69	K-2-35
10-042M-AU10	Fixing Screw for Trimming Driver BracketB(Set)	69	K-2-28
10-072S-SW70	Fixing Screw for External Concept	68	K-1-30
10200100H000	Thread Guide Bush "A-1"	46	G-2-2

Part No.	Part Name	Page	Ref.No
10200103B000	Head Face Plate (U) 9C	46	G-2-1
10300002A000	Thread Guide (M) Set(6C)	46	G-2-3
10300004A000	Thread Guide (M) Set(12C)	46	G-2-3
10300005A000	Thread Guide (M) Set(15C)	46	G-2-3
10600110B000	Sud Tension Adjusting Set(New)	58	I-2-15
10600210B000	Sub Tension Adjusting Set(black)	58	I-2-16
10600210H000	Thread Angle Frame	58	I-2-10
10600700H000	Spacer	58	I-2-12
11009PR-B001	Thread Breakage Detecting Plat	79	M-1-6
11009SC-A001	Stud Screw	81	M-3-11
11012PR-B001	Thread Guide	46	G-2-7
11012PR-B001	Thread Guide (New)	79	M-1-8
11014SN-1211	Hex.Nut (M3-No2)	79	M-1-10
11019SW-9115	Spring Washer (@3)	65	J-2-11
11019SW-9115	Spring Washer (3@)	23	C-3-18
11019SW-9115	Spring Washer (3@)	30	D-2-12
11020PM-B001	TENSION ADJUSTING PLATE HOLDER	79	M-1-14
11027CW-A001	TENSION PLATE PIN	44	G-1-36
11029SC-4113	Hex. Socket Bolt (M4*L20)	55	H-5-9
11029SC-4113	Hex. Socket Bolt (M4*L20)	79	M-1-16
11029SC-4113	Hex. Socket Bolt (M4*L20)	41	F-3-35
11031PR-AB00	Cover Plate 12C	81	M-3-4
11032PR-T121	Cable Supporter 12C	81	M-3-1
11047PR-A002	Cable Support "B"	46	G-2-16
11049SC-A001	Board Stud Bolt	73	L-1-2
11075PM-B001	Thread Sensor Roller(B1)Set	80	M-2-2
11076PM-B001	Thread Sensor Roller(B2)Set	80	M-2-3
11083CW-B001	THREAD DETECTING WHEEL STUD	80	M-2-4
11101200T000	Upper Dead Point Stopper	43	G-1-13
116410S-8118	Driver Screw 11/64-40,L10	51	H-2-2
12000200B000	CABLE COVER PLATE	74	L-2-4
12001900U000	Upper Thread Hook Motor Cover	52	H-3-41
12010SN-1211	Hex.Nut (M5)	47	G-3-19
12010SN-1211	Hex.Nut (M5)	57	I-1-14
12012PM-A001	Spool Holder	57	I-1-10
12012-PM-A001	Spool Holder	86	O-1-5
12013SC-A001	Spool Plate Fixing Bolt (M8*L22)	57	I-1-3
12018BR-T121	Needle Bearing (IKO TLA1010Z)	37	F-1-7
12018BR-T121	Needle Bearing (IKO TLA1010Z)	64	J-1-34
12042PM-A001	Eyelet	58	I-2-20
12052SF-A001	Spool Sponge	57	I-1-11
13001CA-UK06	Color Change Base	47	G-3-1
13003000T000	Mes Shaft Collar	51	H-2-12
13003SC-4113	Hex. Socket Bolt (M8*L35)	34	E-2-21
13005CM-UK06	Color Change Cam	47	G-3-14
13007CW-UK06	Color Change Shaft	47	G-3-7
13010BR-T121	Washer(@12*@26*1T)	47	G-3-11
13010CW-UK06	Color Change Collar	47	G-3-13
13015PR-UK06	Potentiometer Bracket	48	G-4-3
13019PR-A001	Half Turn Film Washer (T1.0)	48	G-4-12
13020GA-UK06	Color Change Gear (L)	48	G-4-4
13021GA-UK06	Color Change Gear (R)	47	G-3-23

Q. Index

Part No.	Part Name	Page	Ref.No
13022AD-UK06	Color Change Passivity Handle	48	G-4-10
13026BR-T121	Needle Bearing (6002Z)	33	E-1-27
13026CL-D104	Color Change Roller Base (9C)	47	G-3-16
13026CL-UK06	Color Change Roller Base (12C)	47	G-3-16
13026CL-UK16	Color Change Roller Base(15C)	47	G-3-16
13027MT-UK06	Color Change Motor	48	G-4-6
13032AD-UK06	Color Change Film Set	47	G-3-5
13041BR-UK01	Washer(12*@26*1T)	47	G-3-12
13042SN-1111	Hex.Nut (M6*T5-R)	30	D-2-22
13042SN-1111	Hex.Nut (M6*T5-R)	33	E-1-20
13042SN-1111	Hex.Nut (M6*T5-R)	47	G-3-27
13042SN-1111	Hex.Nut (M6*T5-R)	52	H-3-27
13044SR-4013	E-Ring (@4)	50	H-1-6
13053PR-UK01	Angle Plate Base	33	E-1-12
13054ET-UK01	Angle Disk	33	E-1-14
13054SC-3123	Truss Bolt (M3*L8)	65	J-2-8
13054SC-3123	Truss Screw (M3*L8)	86	O-1-19
13061SC-8119	Plus Screw (M3*L10)	52	H-3-40
13061SC-8119	Plus Screw(M3*L10)	33	E-1-13
13118CS-UK01	Idler Support Bracket	33	E-1-21
13123CW-E121	Idler Plate	33	E-1-18
14002SC-7113	HEX.SOCKET BOLT (M6*L15)	30	D-2-2
14002SC-7113	Hex.Socket Bolt (M6*L15)	77	L-5-3
14003SC-4113	Hex. Socket Bolt (M8*L25)	29	D-1-2
14006SC-4113	Hex. Socket Bolt (M8*L15)	40	F-3-6
14006SC-7113	Hex.Socket Set Screw(M8*L15)	33	E-1-15
14014SC-4113	Socket Bolt (M5*L8)	63	J-1-4
14014SC-4113	Socket Bolt (M5*L8)	65	J-2-20
14027SC-4113	Hex.Socket Bolt (M8*L30)	33	E-1-22
14046SC-7113	Hex.Socket Bolt (M6*L30)	25	C-5-2
14046SC-7113	Hex.Socket Bolt (M6*L30)	25	C-5-11
14046SC-7113	Hex.Socket Bolt (M6*L30)	27	C-7-2
14046SC-7113	HEX.SOCKET BOLT (M6*L30)	35	E-3-5
14058CW-A001	Collar "A"	33	E-1-9
14060AF-4517	Hex. Socket Screw (M6*L6)	37	F-1-10
14060AF-4517	Hex. Socket Screw (M6*L6)	40	F-3-21
14060AF-4517	Hex.Socket Screw(M6*L6)	29	D-1-13
14060AF-4517	Hex.Socket Screw(M6*L6)	30	D-2-20
14060AF-4517	Hex.Socket Screw(M6*L6)	33	E-1-11
14060AF-4517	Hex.Socket Screw(M6*L6)	35	E-3-11
14060AF-4517	HEX.SOCKET SCREW(M6*L6)	33	E-1-25
14061AF-4517	Hex. Socket Screw (M8*L8)	40	F-3-19
14061AF-4517	Hex.Socket Screw(M8*L8)	33	E-1-7
14061AF-4517	Hex.Socket Screw(M8*L8)	35	E-3-16
14063SC-A001	Tension Control Bolt (M6*L40)	33	E-1-19
14063SC-A001	Tension Control Bolt (M6*L40)	34	E-2-14
15001BR-B001	Cam Roller Bearing (LFR50/5KDD4)	39	F-2-24
15001BR-B001	Cam Roller Bearing (LFR50/5KDD4)	65	J-2-28
15012MT-T121	Potentiometer (7824 R1K L25)	48	G-4-1
15014PR-T121	Potentiometer Washer	48	G-4-2
15-026M-1000	Cable Tie	71	K-4-22
15-027A-2070	SENSOR	52	H-3-39

Part No.	Part Name	Page	Ref.No
15042SC-3123	Truss Screw (M4*L6)	21	C-1-4
15042SC-3123	Truss Screw (M4*L6)	84	N-2-12
15042SC-3123	Truss Screw (M4*L6)	86	O-1-9
15042SC-3123	Truss Screw (M4*L6)	91	P-3-8
15046ET-T121	Wire Holder	27	C-7-10
15048SC-4119	Bolt (M5*L12)	40	F-3-12
15077SW-2111	Washer (@8)	34	E-2-23
15077SW-2111	Washer (8@-S)	57	I-1-4
15089SC-7119	C.S Screw (M4*L10)	57	I-1-2
15089SC-7119	C.S Screw (M4*L10)	77	L-5-9
15089SC-7119	C.S Screw (M4*L10)	79	M-1-2
15089SC-7119	C.S Screw (M4*L12)	59	I-3-17
15089SC-8119	Bolt (M4*L12)	41	F-3-31
15095SW-3115	Spring Washer (@8)	14	B-1-3
15095SW-3115	Spring Washer (@8)	29	D-1-3
15095SW-3115	Spring Washer (@8)	33	E-1-16
15095SW-3115	Spring Washer (@8)	33	E-1-23
15095SW-3115	SPRING WASHER (@8)	35	E-3-3
15095SW-3115	Spring Washer (@8)	52	H-3-18
15095SW-4115	Spring Washer	40	F-3-7
15095SW-4115	Spring Washer (@8)	34	E-2-22
15159SR-4013	E-Ring (3@)	51	H-2-4
15159SR-4013	E-Ring (3@)	83	N-1-16
16002CW-B001	Cam Roller Bolt	39	F-2-23
16002CW-B001	Cam Roller Bolt	65	J-2-27
16009SC-4113	Hex.Socket Bolt(M10*L25)	59	I-3-4
16009SC-8330	Tapping Screw (M6*L20)	59	I-3-11
16009SC-8330	Tapping Screw (M6*L20)	60	I-4-18
16014SW-4115	Spring Washer (@6)	33	E-1-3
16014SW-4115	Spring Washer (@6)	34	E-2-11
16014SW-4115	Spring Washer (@6)	52	H-3-4
16014SW-4115	SPRING WASHER (@6)	52	H-3-26
16014SW-4115	Spring Washer (@6)	77	L-5-4
16018SW-1111	Washer (@5)	24	C-4-8
16018SW-1111	WASHER (@5)	26	C-6-21
16018SW-1111	Washer (@5)	59	I-3-14
16018SW-1111	Washer (@5)	91	P-3-6
16018SW-1111	Washer (@5)	74	L-2-9
16018SW-1111	Washer (@5)	75	L-3-5
16019SW-4115	Spring Washer	40	F-3-15
16029SW-3115	Spring Washer (10@)	59	I-3-5
16055AF-UK01	Y-MOTOR(103H8222-5013)	29	D-1-8
16058AD-UK01	Table Support Plate (B)	59	I-3-16
16059SC-7113	Hex.Socket Bolt (M6*L12)	33	E-1-32
16061PR-UK01	Table Support Plate (A)	59	I-3-15
16065PR-UK01	Clamp Plate	60	I-4-17
16067ET-UK01	Table Toggle Clamp	61	I-4-20
17014PR-UK01	Round Frame Holder-A	83	N-1-12
17015PR-UK01	Round Frame Holder-B	83	N-1-13
17051SN-A001	Mes Priving Shaft Joint	47	G-3-26
17053SN-1111	Hex. Nut(L) (M6*T5-L)	47	G-3-25
17062SC-UK01	Table Support Stopper Screw	59	I-3-20

Part No.	Part Name	Page	Ref.No
17063SC-UK01	TABLE SUPPORT STOPPER SCREW	59	I-3-22
17073PR-UK01	Table Support Angle "F"	59	I-3-32
17085PM-UK01	Positioning Block	59	I-3-26
18013AF-7113	Hex. Socket Bolt (M4*L10)	74	L-2-12
18014SW-3115	Spring Washer	19	B-5-5
18014SW-3115	Spring Washer (@4)	23	C-3-5
18014SW-3115	Spring Washer (@4)	63	J-1-14
18014SW-3115	Spring Washer (@4)	65	J-2-16
18014SW-3115	Spring Washer (@4)	66	J-3-9
18014SW-3115	Spring Washer (@4-No2)	47	G-3-3
18014SW-3115	SPRING WASHER (@4-NO2)	53	H-3-43
18014SW-3115	Spring Washer (@4-No2)	53	H-3-46
18014SW-3115	Spring Washer (@4-No2)	55	H-5-3
18015SW-3111	Washer (@4)	63	J-1-15
18015SW-3111	Washer (@4)	65	J-2-17
18015SW-3111	Washer (@4)	66	J-3-10
18015SW-3111	Washer (4@)	27	C-7-14
18015SW-3111	Washer (4@)	33	E-1-37
18015SW-3111	Washer (4@)	47	G-3-4
18015SW-3111	WASHER (4@)	53	H-3-44
18015SW-3111	Washer (4@)	53	H-3-47
18015SW-3111	Washer (4@)	55	H-5-4
18015SW-3111	WASHER(4@)	59	I-3-31
18025PM-UK01	Location Block	84	N-2-14
18033PR-UK01	Oil Tube Guide	25	C-5-29
18036CW-UK06	Oil Tank Cover Support	24	C-4-10
18047SC-7113	HEX/ SOCKET BOLT (M5*L15)	30	D-2-25
18047SC-7113	Hex/ Socket Bolt (M5*L15)	47	G-3-20
18047SC-7113	Hex/ Socket Bolt (M5*L15)	52	H-3-12
18047SC-7113	HEX/ SOCKET BOLT (M5*L15)	29	D-1-9
18048SC-7113	Truss Bolt (M5*L12)	65	J-2-18
18048SW-3115	Spring Washer (@5)	24	C-4-7
18048SW-3115	SPRING WASHER (@5)	26	C-6-20
18048SW-3115	Spring Washer (@5)	29	D-1-10
18048SW-3115	Spring Washer (@5)	47	G-3-18
18048SW-3115	Spring Washer (@5)	57	I-1-13
18048SW-3115	Spring Washer (@5)	58	I-2-14
18048SW-3115	Spring Washer (@5)	59	I-3-13
18048SW-3115	Spring Washer (@5)	91	P-3-5
18048SW-3115	Spring Washer (@5)	73	L-1-3
18048SW-3115	Spring Washer (@5)	74	L-2-8
18048SW-3115	Spring Washer (@5)	75	L-3-4
18048SW-3115	Spring Washer (5@)	34	E-2-3
18048SW-3115	Spring Washer (5@)	34	E-2-18
18048SW-3115	Spring Washer (5@)	52	H-3-13
18048SW-3115	Washer	18	B-4-21
18049SW-3111	Washer	40	F-3-16
18049SW-3111	Washer (@5)	26	C-6-5
18049SW-3111	Washer (@5)	29	D-1-11
18049SW-3111	Washer (@5)	34	E-2-4
18049SW-3111	Washer (@5)	34	E-2-19
18049SW-3111	Washer (@5)	52	H-3-14

Q. Index

Part No.	Part Name	Page	Ref.No
18049SW-3111	Washer (@5)	63	J-1-6
18049SW-3111	Washer (@5)	63	J-1-11
18049SW-3111	Washer (@5)	65	J-2-22
18049SW-3111	Washer (@5)	74	L-2-3
18049SW-3111	Washer (@5)	74	L-2-13
18084PR-A001	Embroidery Frame Clip L,300	84	N-2-17
18085PR-A001	Embroidery Frame Clip	84	N-2-17
18085PR-T121	Embroidery Frame Clip L,220	84	N-2-17
18086PR-B001	Frame Clip Support	84	N-2-18
18153SC-3123	Plus Screw (M4*L10)	84	N-2-15
18153SC-3123	Truss Bolt (M4*L10)	64	J-1-43
18153SC-3123	Truss Screw (M4*L12)	86	O-1-7
18153SC-3123	Truss Screw (M4*L12)	87	O-2-2
18154SC-9134	PLUS SCREW (M3*L8)	73	L-1-4
19002SC-1330	Tapping Screw (4*L16-No1)	61	I-4-21
20000000UK60	Angle Assy	58	I-2-21
20001PR-A001	Lamp Ass'Y Connecter	75	L-3-14
20-002B-SW70	Connecting Pressing Plate Sponge	70	K-3-11
20-006A-SW70	LCD	70	K-3-5
20009EL-B001	LAMP (32W)	75	L-3-9
20009EL-WH15	WHEEL SENSOR BOARD	80	M-2-10
20009PR-A001	Reflecting	75	L-3-10
20014ET-A001	Lamp Socket	75	L-3-7
22003PM-T121	Clip Bracket (L)	83	N-1-8
22005PR-T121	Clip	83	N-1-7
22006SC-7113	Hex. Socket Bolt (M3*L8)	30	D-2-10
22006SC-7113	HEX. SOCKET BOLT (M3*L8)	35	E-3-13
22006SC-7113	Hex.Scoket Bolt (M3*L8)	23	C-3-17
22006SC-7113	Socket Bolt (M3*L8)	65	J-2-10
22027EL-A001	Inverter	70	K-3-30
22044CW-UK01	Adjusting Bolt	83	N-1-15
22045CW-UK01	Adjusting Bolt Guide	83	N-1-17
22046CW-UK01	Adjusting Nut	83	N-1-18
23004SH-UK02	Mes Driving Shaft(@6, L=520)	30	D-2-21
23012SH-UK06	Color Change Shaft "A" (@6,L1363.5) (12C)	47	G-3-24
23012SH-UK16	Color Change Shaft "A" (@6,L1386) (15C)	47	G-3-24
23013SH-UK06	Color Change Shaft "B" (@6,L1363.5) (9C)	47	G-3-28
23013SH-UK06	Color Change Shaft "B" (@6,L1363.5) (12C)	47	G-3-28
23013SH-UK16	Color Change Shaft "B" (@6,L1386) (15C)	47	G-3-28
24004AD-UK06	Square Frame (B) L=3152	84	N-2-2
24004PR-UK02	Connecting Plate "E"	84	N-2-8
24005PR-UK06	Frame Space	84	N-2-6
24006AD-UK06	Square Frame (C) L=583	84	N-2-4
24007AD-UK06	Square Frame (D) L=583	84	N-2-3
24008PR-UK06	Connecting Plate (F)	84	N-2-5
24011PR-T121	Connecting Plate "C"	84	N-2-9
24016SF-T121	Felt	84	N-2-11
24026RB-UK06	Rubber Cap (L)	84	N-2-20
24027RB-UK06	Rubber Cap (R)	84	N-2-21
25025EL-UK06	Cable (25-25)	48	G-4-13
25027EL-UK06	Cable (25-27)	77	L-5-16
25032EL-UK01	Cable (25-28)	77	L-5-15

Part No.	Part Name	Page	Ref.No
25053EL-UK06	Cable (25-53)	75	L-3-12
25124EL-B001	Tension Plat Earth Cable 15C	81	M-3-9
25126EL-B001	Sensor Board To Wheel Earth	81	M-3-10
28021SC-3123	Truss Screw (M3*L4)	50	H-1-3
32003ET-T121	Wick	16	B-3-19
32003ET-T121	Wick	18	B-4-3
32003ET-T121	Wick	18	B-4-10
32003ET-T121	Wick	18	B-4-12
AS-000484	Thread Guide (M) Set (9C)	46	G-2-3
AS-006566	UPPER THREAD HOLDING SET	22	C-2-14
AS-001429	Picker Base Ass'Y	51	H-2-3
AS-001838	Lamp Ass,Y "B"	75	L-3-1
AS-003332	Tubular Frame Assy	83	N-1-19
AS-003443	Take-Up Driving Lever "A" Ass'y	14	B-1-12
AS-003446	NEEDLE BAR DRIVE LEVER Ass'y	18	B-4-1
AS-003447	Needle Bar Reciprocator A'ssy	18	B-4-8
AS-003449	Jump Crank Roller Ass'y	23	C-3-11
AS-003951	Thread Control Device Ass'y	86	O-1-11
AS-004284	Transformer Ass'y(Set)	68	K-1-3
AS-004640	Color Change Motor Assy	47	G-3-30
AS-005868	Presser Driving Lever A'ssy	18	B-4-16
AS-005870	Presser Foot Driving Assy	18	B-4-24
AS-006107	Thread Holding Lever Ass'y	22	C-2-6
AS-006112	ARM SIDE COVER Assy	19	B-5-21
AS-006113	Jump Assy	23	C-3-30
AS-006437	Head Assy (9c)	44	G-1-38
AS-006504	Head Assy (15c)	45	G-1-38
AS-006530	Head Assy (12c)	44	G-1-38
AS-006537	MES DRIVING Box Assy	30	D-2-29
AS-006608	Bed Assy	12	A-2-23
AS-006679	Head Ass' y (6c)	44	G-1-38
AS-006816	First Bed Assy	12	A-2-24
AS-006824	Y-Driving "A" Assy	38	F-1-28
AS-006825	Y-Driving "B" Assy	38	F-1-29
AS-007290	Needle Fixed Holder Set	44	G-1-31
AS-007362	Presser foot Guide Shaft Set (Sequin)	44	G-1-37
AS-007448	X-Belt Box Assy	64	J-1-46
AS-007459	Y-Motor Box Assy	41	F-3-36
AS-008052	NEEDLE BAR DRIVING CAM Assy	17	B-3-24
AS-008053	Presser Foot Driving Cam Assy	17	B-3-23
AS-008356	Y-Fixed Frame A Assy	39	F-2-25
AS-008657	Y-Fixed Frame B Assy	39	F-2-26
AS-014987	X-Frame Assy	65	J-2-30
AS-015538	Square Assy	84	N-2-22
AS-018390	Presser foot Guide Shaft Set	45	G-1-39
AS-019402	Presser foot Assy	45	G-1-40
BD-000168	Surge Protector	68	K-1-8
BD-000242	Connect Board	68	K-1-6
BD-000243	SMPS Connect Board	68	K-1-17
BD-000244	Trimming Driver(A)	69	K-2-23
BD-000244	Trimming Driver(B)	69	K-2-25
BD-000245	Joint Board(A)	69	K-2-11

Part No.	Part Name	Page	Ref.No
BD-000245	Joint Board(B)	69	K-2-12
BD-000299	CPU Board	70	K-3-14
BD-000310	Dual Color Change Board	73	L-1-9
BD-000346	C-KEY Board	71	K-4-7
BD-000347	F-KEY Board	71	K-4-2
BD-000364	IO Board	70	K-3-19
BD-000529	Thread Sensing Board	73	L-1-1
BD-000534	Presser Foot Driving Pin Sensor	19	B-5-15
BE-000092	MAIN DRIVING BELT 200J*R10	33	E-1-30
BE-000094	X-Driving Box Belt	64	J-1-45
BE-000096	Y-Driving Box Belt (S5M L425 W25)	41	F-3-32
BE-000097	Presser Foot Driving Belt	19	B-5-12
BE-000112	Y-Motor Belt(S5M L255 W25)	41	F-3-33
BE-000129	Timing Belt	33	E-1-31
BE-000139	X-Motor Main Belt	64	J-1-44
BR-000089	Bearing 629ZZ	12	A-2-13
BR-000121	Needle Bearing (IKO TLA1510Z)	64	J-1-33
BR-000151	Take-up Driving Lever Bearing	14	B-1-15
BR-000233	Idler Shaft Bearing (NA4901 IKO)	37	F-1-6
BR-000234	Bearing (NA4902)	63	J-1-19
BS-000096	Hook Shaft Front Bushing	12	A-2-8
CL-000138	Stopper Collar	38	F-1-25
CL-000138	Stopper Collar	40	F-3-23
CL-000145	Presser Foot Driving Pin Collar	19	B-5-16
CL-000147	Presser Foot Driving Cam Collar	16	B-3-16
CL-000159	Cam Tightening Collar (@20)	16	B-3-10
CL-000160	Y-Motor Bearing Collar	40	F-3-20
CL-000169	Hook Shaft Collar "A"	12	A-2-10
CL-000170	Hook Shaft Collar "B"	12	A-2-11
CL-000186	Collar	33	E-1-10
EP-000015	24V SMPS	68	K-1-22
EP-000030	FAN	70	K-3-22
EP-000047	Noise Filter	68	K-1-4
EP-000049	Fuse Holder	68	K-1-28
EP-000050	External Concept	68	K-1-29
EP-000067	Sensor(TL-W3MC1)	65	J-2-24
EP-000067	Xy-Sensor	39	F-2-17
EP-000078	Transformer A'ssy	86	O-1-6
EP-000079	On / Off Switch	87	O-2-3
EP-000080	Push Switch (Start)	87	O-2-8
EP-000081	Push Switch (Stop)	87	O-2-9
EP-000082	Switch (Select)	87	O-2-5
EP-000083	VR	87	O-2-7
EP-000095	PCB (DW-BW01)	86	O-1-8
EP-000125	Direct Motor (750W)	34	E-2-1
EP-000125	X-MOTOR(750W)	63	J-1-7
EP-000141	Upper Thread Hook Motor Unit	52	H-3-1
G P-024894	Hinge Block	71	K-4-15
G P-024895	Operation Box Holder Cover	71	K-4-16
G P-024895	Operation Box Holder Cover	71	K-4-17
GP-007472	Digital SMPS	68	K-1-15
GP-003757	TABLE SUPPORT END CAP	59	I-3-3

Q. Index

Part No.	Part Name	Page	Ref.No
GP-005179	THREAD BREAKAGE DETECTING WHEEL	80	M-2-5
GP-005184	Sensor Sensing Adjusting Ring	52	H-3-8
GP-005357	Needle Plate Bracket	31	D-3-1
GP-005358	Rotary Hook Support	51	H-2-10
GP-005360	Hook Cover	51	H-2-15
GP-005361	Hook Cover Insert	51	H-2-14
GP-005362	Hook Cover Holder	51	H-2-8
GP-005366	Picker Bracket	51	H-2-1
GP-005368	Picker	51	H-2-5
GP-005369	Picker Stopper	51	H-2-9
GP-005370	Connecting Plate	50	H-1-8
GP-005696	Angle "A" -1506	58	I-2-1
GP-005697	Angle "B" -1506	58	I-2-2
GP-005698	Angle "C"-1506	58	I-2-3
GP-005699	Angle "D" -1506	58	I-2-4
GP-006252	Color Change Bushing	47	G-3-21
GP-006638	Moving Mes Shaft	31	D-3-8
GP-006815	Idler	33	E-1-26
GP-006816	IDLER SHAFT	33	E-1-28
GP-006817	Idler Spacer	33	E-1-29
GP-008404	Tension Adjusting Block	34	E-2-13
GP-008536	Encoder Base	24	C-4-5
GP-008539	Needle Bar Guide Rail(6C)	46	G-2-18
GP-008769	Jump Driving Crank	23	C-3-9
GP-009003	Lamp Socket Fixed Plate	75	L-3-8
GP-009433	Fixing Bracket for Trimming Driver	69	K-2-20
GP-009434	Fixing Bracket for Drive	69	K-2-32
GP-009435	SMPS Bracket(B)	68	K-1-23
GP-009441	Rear Cover	69	K-2-5
GP-009442	Fixing Bracket for Joint Board	69	K-2-13
GP-009445	Driver Fixing Plate	69	K-2-9
GP-009453	Copper Plate for SMPS(A)	68	K-1-26
GP-009454	Copper Plate for SMPS(B)	68	K-1-27
GP-009455	Base Rubber	68	K-1-32
GP-009831	Main Driver Sticker	69	K-2-36
GP-009832	X-Driver Sticker	69	K-2-37
GP-009833	Y-Driver Sticker	69	K-2-18
GP-010074	LEVELING BASE ASS'Y	11	A-1-6
GP-010656	Fixing Stud for SB DDC Radiator	70	K-3-28
GP-010736	Stud for SMPS Connect Board	68	K-1-18
GP-011629	TUBULAR FRAME(INNER)	83	N-1-10
GP-011630	TUBULAR FRAME(OUTER)	83	N-1-11
GP-011777	Color Change Cover	91	P-3-15
GP-011931	Needle Bar Guide Rail(9C)	46	G-2-18
GP-011932	NEEDLE BAR DRIVING CAM	16	B-3-5
GP-011933	Bearing Case A @20	16	B-3-6
GP-011936	Arm Bearing Guide Plate	15	B-2-6
GP-011944	Head Rail (9C)	43	G-1-4
GP-011946	Color Change Bracket "A"	91	P-3-26
GP-012729	Radiator for Trimming Driver	69	K-2-17
GP-012800	Needle Plate Guide(L)	31	D-3-5
GP-012801	Needle Plate Guide(R)	31	D-3-6

Part No.	Part Name	Page	Ref.No
GP-013744	Conrtol Box	68	K-1-2
GP-013749	SMPS Bracket(A)	68	K-1-16
GP-014095	Needle Bar Guide Rail(12C)	46	G-2-18
GP-014096	Head Rail (12C)	43	G-1-4
GP-014341	CPU Board Fixing Stud	70	K-3-16
GP-014343	Fixing Bracket for OP	71	K-4-13
GP-014345	Base Plate	70	K-3-2
GP-014345	Base Plate	71	K-4-12
GP-014346	Rubber For Support Base	86	O-1-18
GP-014348	Front Cover	71	K-4-1
GP-014349	Rear Cover	71	K-4-18
GP-014350	LCD Cover	70	K-3-4
GP-014351	Connector Cover	71	K-4-20
GP-014354	Bobbin Shaft	86	O-1-15
GP-014356	Button (Number Key)	71	K-4-8
GP-014357	Button (DOWN,UP Key)	71	K-4-9
GP-014359	Button (F-Speed Key)	71	K-4-10
GP-014360	Button (START,STOP Key)	71	K-4-3
GP-014361	Insulation Bush(A)	70	K-3-13
GP-014361	Insulation Bush(A)	70	K-3-18
GP-014362	Insulation Bush(B)	70	K-3-15
GP-014362	Insulation Bush(B)	70	K-3-20
GP-014363	Spool Support Base	86	O-1-3
GP-014365	Spool Support Base Sponge	86	O-1-4
GP-014366	Spool Post	86	O-1-2
GP-014368	Antenna Bar	87	O-2-11
GP-014369	Antenna Bar Hanger	87	O-2-10
GP-014370	Tension Control Holder	86	O-1-10
GP-014677	VR Knob	87	O-2-6
GP-014678	Fuse Holder	87	O-2-4
GP-014869	Cover	87	O-2-1
GP-014870	Base	86	O-1-1
GP-014871	Motor Bracket	86	O-1-14
GP-015067	Angle Bushing	71	K-4-5
GP-015068	Button (F Key)	71	K-4-4
GP-015069	Button (Move Key)	71	K-4-11
GP-015085	UPPER THREAD HOOK SENSOR BASE	52	H-3-37
GP-015086	MOTOR BASE	52	H-3-2
GP-015264	Limit Sensor Base	30	D-2-13
GP-015265	Limit Sensor Plate	30	D-2-9
GP-015970	Input voltage Sticker	68	K-1-33
GP-016274	Inside Sticker	69	K-2-38
GP-017235	SB DDC Radiator	70	K-3-26
GP-017239	SB DDC Radiator Sheet	70	K-3-27
GP-019021	Insulation Bush(A)	70	K-3-7
GP-019022	Insulation Bush(B)	70	K-3-8
GP-019154	Table Holding Block	60	I-4-19
GP-019554	Table Support Angle	90	P-2-8
GP-019554	Table Support Angle	90	P-2-8
GP-020673	ARM SIDE COVER A	19	B-5-1
GP-021613	Needle Bar Return Spring	43	G-1-18
GP-022662	Hook Shaft Gear	12	A-2-5

Part No.	Part Name	Page	Ref.No
GP-023199	Needle Bar Driving Shaft	18	B-4-11
GP-023962	Presser Foot Driving Cam	16	B-3-13
GP-023969	Presser Foot Driving Motor Bracket	19	B-5-3
GP-023975	ARM SIDE COVER B	15	B-2-1
GP-023978	Head (15C)	43	G-1-1
GP-024025	Presser Driving Cam Cover	16	B-3-14
GP-024097	MAIN MOTOR PULLEY	34	E-2-7
GP-024098	TOP SHAFT PULLEY	35	E-3-15
GP-024109	X-Idler C	64	J-1-38
GP-024218	Presser Foot Driving Pin Pulley	19	B-5-7
GP-024219	Presser Foot Driving Pin Pulley	19	B-5-10
GP-024427	Jump Motor Base	23	C-3-3
GP-024530	Bearing Cover	63	J-1-26
GP-024661	PRESSER FOOT PRESSURE SPRING	44	G-1-24
GP-024669	Head (9C)	43	G-1-1
GP-024674	Head Face Plate(L)	46	G-2-6
GP-024677	X-Driving Timing Pulley	63	J-1-24
GP-024688	Arm Guard Plate(L)	22	C-2-1
GP-024829	Take-up Driving Lever	14	B-1-13
GP-024830	Take-Up Driving Lever "B"	14	B-1-5
GP-024831	Take-up Driving Lever Return Spring	14	B-1-18
GP-024833	Take-up Driving Cam	16	B-3-15
GP-024834	ARM	14	B-1-1
GP-024841	CAM BASE	16	B-3-1
GP-024977	Cable Bracket For Busing	74	L-2-14
GP-025070	MAIN SWITCH BOX	76	L-4-7
GP-025609	Presser Foot Driving Pin Sensor Bracket	19	B-5-13
GP-025610	Arm Guard Plate(R)	22	C-2-4
GP-025661	ARM TOP COVER	21	C-1-3
GP-025695	Spool Plate -1506	57	I-1-1
GP-025701	TOP SHAFT COVER(L)SET	91	P-3-19
GP-025785	Needle Bar Bushing(U)	44	G-1-25
GP-025788	Presser Foot Holder Guide Rail	46	G-2-10
GP-025795	PRESSER FOOT (L)	43	G-1-20
GP-025879	Support For Connect Frame	66	J-3-5
GP-025911	TOP SHAFT COVER	91	P-3-1
GP-025927	X-DRIVING SHAFT	63	J-1-25
GP-025932	X-Sensor Plate	65	J-2-23
GP-025936	Tubular Frame (A)	83	N-1-1
GP-025937	Tubular Frame (B-1)	83	N-1-2
GP-025938	Tubular Frame (B-2)	83	N-1-3
GP-025939	Tubular Frame (C)	83	N-1-4
GP-025951	Square Frame (A)	84	N-2-1
GP-025952	SQUARE FRAME FIXIING PLATE A	84	N-2-13
GP-025953	X-Frame Cover Stud	65	J-2-26
GP-025965	Y-Driving Pulley (20T) (@15)	41	F-3-29
GP-025974	Y-Motor Driving Pulley Φ15 36T	40	F-3-28
GP-025977	Y-Pulley Φ20 (45T)	40	F-3-26
GP-026153	Oil Tank Cover	24	C-4-9
GP-026171	Y-Motor Shaft	40	F-3-17
GP-026380	Needle Bar Drive Rink	18	B-4-6
GP-026380	Needle Bar Drive Rink	18	B-4-23

Q. Index

Part No.	Part Name	Page	Ref.No
GP-026495	Front Cover	69	K-2-1
GP-026703	Rail Guide Bed Cover	50	H-1-13
GP-026844	Presser Foot Holder A'ssy	44	G-1-21
GP-026927	Cable Clamp	64	J-1-42
GP-026938	Upper Thread Driving Shaft B (L1435) @8	52	H-3-36
GP-027022	Head(12C)	43	G-1-1
GP-027340	Head (6C)	43	G-1-1
GP-027487	X-Idler A	64	J-1-36
GP-027488	X-Idler B	64	J-1-37
GP-027496	X-Tension Adjusting Block	63	J-1-16
GP-027497	X-Tension Adjusting Sub Block	63	J-1-12
GP-027499	X-DRIVING BOX Cover A	64	J-1-39
GP-027503	Y-Idler A	37	F-1-8
GP-027504	Y-Idler B	37	F-1-9
GP-027520	Y-Idler Shaft	37	F-1-16
GP-027587	Y-Motor Driving Pulley Φ16 16T	40	F-3-18
GP-027608	Tubular Frame (D)	83	N-1-5
GP-027609	Tubular Frame (H)	83	N-1-6
GP-027828	Motor Plate	63	J-1-8
GP-027846	X-Motor Timing Pulley	63	J-1-17
GP-028131	Angle "A"-1206	58	I-2-1
GP-028132	Angle "B"-1206	58	I-2-2
GP-028133	Angle "C"-1206	58	I-2-3
GP-028135	Angle "D"-1206	58	I-2-4
GP-028136	Spool Plate -1206	57	I-1-1
GP-028159	Top Shaft "A" (L2305.5)(UK1504)	35	E-3-17
GP-028811	Bed	12	A-2-1
GP-028818	Mes Driving Lever Shaft	31	D-3-19
GP-028932	Gear Cover	59	I-3-33
GP-028944	BEAM & BODY	11	A-1-1
GP-028945	Pulley (Tubular)	35	E-3-14
GP-028946	Pulley (Tubular)	33	E-1-6
GP-028947	Motor Fixing	34	E-2-9
GP-028948	Main Motor Bracket	34	E-2-20
GP-028949	INDICATOR	33	E-1-34
GP-028968	Fixed Table "A"	60	I-4-5
GP-028969	Fixed Table "B"	60	I-4-6
GP-028970	FIXED TABLE "C"	60	I-4-7
GP-028971	Table "A"	60	I-4-1
GP-028972	Table "B"	60	I-4-2
GP-028973	Table "C"	60	I-4-3
GP-028974	Table "D"	60	I-4-4
GP-028979	Y-Motor Bearing Case @20	40	F-3-22
GP-028993	Hook Shaft	12	A-2-9
GP-028995	Hook Shaft Rear Bushing	12	A-2-7
GP-029004	Fixed Table "R"	60	I-4-8
GP-029005	Fixed Table "L"	60	I-4-9
GP-029006	Table Connecting Cover "A"	60	I-4-12
GP-029007	Table Connecting Cover "B"	60	I-4-13
GP-029008	Y-Driving Shaft Coupling Cover	60	I-4-10
GP-029010	Mes Cam Driving Box Cover	61	I-4-22
GP-029015	Y-Idler C	37	F-1-11

Part No.	Part Name	Page	Ref.No
GP-029016	Y-Fixed Frame B	39	F-2-3
GP-029017	Y-Driving Box	37	F-1-1
GP-029018	Y-Pulley Bracket	40	F-3-4
GP-029019	Y-Driving Pulley Shaft A(Φ20)	37	F-1-12
GP-029020	Y-Driving Pulley Shaft B(Φ20)	37	F-1-13
GP-029021	Y-Motor Box	40	F-3-1
GP-029022	Y-Motor Box Shaft Φ20	38	F-1-24
GP-029023	Y-Motor Plate A	40	F-3-2
GP-029025	Y-Motor Plate B	40	F-3-3
GP-029026	Y-Moving Frame	39	F-2-1
GP-029027	Tension Plate A	41	F-3-30
GP-029028	Tension Plate B	41	F-3-34
GP-029068	SURFACE COVER	91	P-3-11
GP-029073	BODY FRONT COVER "A"	90	P-2-1
GP-029074	BODY FRONT COVER "B"	90	P-2-2
GP-029075	BODY FRONT COVER "C"	90	P-2-3
GP-029076	BODY FRONT COVER "D"	90	P-2-4
GP-029077	BODY FRONT COVER "E"	90	P-2-5
GP-029078	BODY FRONT COVER "F"	90	P-2-6
GP-029079	BODY FRONT COVER "G"	90	P-2-7
GP-029080	Table Connecting Cover "C"	60	I-4-14
GP-029081	BODY SIDE COVER(A) "R"	89	P-1-1
GP-029082	BODY SIDE COVER(A) "L"	89	P-1-2
GP-029083	BODY SIDE COVER(B)	89	P-1-3
GP-029085	BODY INSIDE COVER "L"	91	P-3-17
GP-029086	BODY INSIDE COVER "R"	76	L-4-1
GP-029088	Cable Cover "B"	74	L-2-1
GP-029089	X-Frame Cover A	65	J-2-4
GP-029090	X-Frame Cover B	65	J-2-5
GP-029091	X-Frame Cover C	65	J-2-6
GP-029112	X-Frame	65	J-2-3
GP-029116	SUPPORT FOR BODY "A"	11	A-1-2
GP-029120	Y- Sensing Plate	39	F-2-9
GP-029121	Y- Sensor Plate	39	F-2-16
GP-029122	Table Fixing Plate	59	I-3-27
GP-029123	Support For Table "A"	59	I-3-1
GP-029125	X-Frame Spacer	65	J-2-13
GP-029126	Y-Fixed Frame Fix Plate	39	F-2-15
GP-029127	Y-Fixed Frame A	39	F-2-2
GP-029128	Y-Driving Shaft A(L=1083)	38	F-1-22
GP-029129	Y-Driving Shaft B(L=329)	38	F-1-23
GP-029133	Low SHAFT "A" (L352)	35	E-3-21
GP-029134	Low SHAFT "B" (L1550)(UK1506)	35	E-3-22
GP-029135	Low SHAFT "C" (L1410) (UK1506)	35	E-3-25
GP-029159	SUPPORT FOR BODY "B"	11	A-1-3
GP-029197	X-DRIVING BOX Cover B	64	J-1-40
GP-029245	TABLE Angle "A"	59	I-3-7
GP-029246	TABLE Angle "B"	59	I-3-8
GP-029247	TABLE Angle "C"	59	I-3-9
GP-029249	Y-Cover Bracket	39	F-2-4
GP-029250	Y-Frame Cover	39	F-2-5
GP-029277	Head Oil Hose Guide	25	C-5-25

Part No.	Part Name	Page	Ref.No
GP-029291	Tension Block	40	F-3-13
GP-029322	Low SHAFT "B" (L1962)(UK1504)	35	E-3-22
GP-029325	Top Shaft "A" (L1305.5) (UK1502)	35	E-3-17
GP-029352	First Bed	12	A-2-20
GP-029446	Thread Cutting Shaft "A" @6 L=1190	30	D-2-28
GP-029526	Felt Holder	15	B-2-3
GP-029527	Felt	15	B-2-4
GP-029547	Y-Frame Rear Cover	39	F-2-19
GP-029548	Y-Frame Rear Cover Bracket A	39	F-2-21
GP-029549	Y-Frame Rear Cover Bracket B	39	F-2-22
GP-029560	Y-Fixed Frame Front Cover	39	F-2-11
GP-029583	Spacer	38	F-1-27
GP-029656	X-Driving Connecting Bracket	64	J-1-35
GP-029656	X-Driving Connecting Bracket	65	J-2-19
GP-029675	X- Motor Bracket	65	J-2-1
GP-029836	X-Timing Pulley	63	J-1-23
GP-029841	X- Side Cover of X-motor Bracket	65	J-2-7
GP-029842	Side Cover Plate Of X-Motor Bracket	65	J-2-2
GP-029941	UPPER SHAFT SUPPORT BRACKET	35	E-3-1
GP-030058	Low SHAFT "B" (L962) (UK1502)	35	E-3-22
GP-030086	Motor Block	40	F-3-11
GP-030097	BEAM SIDE COVER	89	P-1-4
GP-030252	Y-Motor Table Cover	60	I-4-11
GP-030270	Table Support Square Bar L=283	59	I-3-18
GP-030271	Table Support Square Bar Guide	59	I-3-21
GP-030278	Top Shaft Pulley Cover	91	P-3-7
GP-030586	TABLE Angle "D"	59	I-3-10
GP-031128	Pulley Cover Bracket	91	P-3-2
GP-032214	Angle "A"-906	58	I-2-1
GP-032217	Angle "B"-906	58	I-2-2
GP-032218	Angle "C"-906	58	I-2-3
GP-032219	Angle "D"-906	58	I-2-4
GP-032220	Spool Plate -906	57	I-1-1
GP-032221	Angle "A"-606	58	I-2-1
GP-032222	Angle "B"-606	58	I-2-2
GP-032223	Angle "C"-606	58	I-2-3
GP-032224	Angle "D"-606	58	I-2-4
GP-032225	Spool Plate -606	57	I-1-1
GP-032906	Spool Stand (L=410)	57	I-1-8
GP-033164	Y-Driving Shaft Bearing Case	38	F-1-17
GP-033164	Y-Driving Shaft Bearing Case	40	F-3-25
GP-033164	Y-Driving Shaft Bearing Case	40	F-3-25
GP-033351	X-Motor Connecting Bracket	63	J-1-21
GP-033354	Motor Connecting Shaft	63	J-1-20
GP-034382	Mes Cam Driving Box	29	D-1-1
GP-034383	Mes Driving Link	30	D-2-5
GP-034451	X-Perception Sensor Plate	66	J-3-3
GP-034453	X-Slide Frame	66	J-3-1
GP-035333	X-Support Slide Frame A	66	J-3-11
GP-035334	Connecting Frame	66	J-3-2
GP-035335	X-Slide Frame Connecting Bracket	66	J-3-7
GP-037337	X-DRIVING BOX	63	J-1-1

Q. Index

Part No.	Part Name	Page	Ref.No
GP-037338	X-DRIVING BOX Fixing Bracket A	63	J-1-2
GP-037339	X-DRIVING BOX Fixing Bracket B	63	J-1-3
GP-037612	Take-up Lever Return Spring Bush	14	B-1-19
GP-037692	Roller Set	47	G-3-17
GP-039231	Upper Shaft Cover(L)(SQ30)	91	P-3-20
GP-044599	COUPLING @20	35	E-3-18
GP-044599	COUPLING @20	38	F-1-20
GP-044777	Needle Bar Holder	43	G-1-15
GP-044787	MOTOR DRIVING CONNECT PLATE	52	H-3-20
GP-048057	Tubular Frame Attachment(A)	83	N-1-20
GP-048058	Tubular Frame Attachment(B)	83	N-1-21
GP-050368	Oil Pump Set	27	C-7-1
GP-052455	Presser foot A	45	G-1-41
GP-052457	Presser foot B	45	G-1-42
GP-054029	Spool Post	57	I-1-12
HG-000001	Hook Cover Hinge	51	H-2-17
LNB-KA0001	Needle Bar	43	G-1-8
MO-000029	Motor Ass'y	86	O-1-13
PN-000351	Presser Foot Driving Lever Pin (C)	18	B-4-22
PN-000368	Presser Foot Driving Pin	19	B-5-17
PN-000371	NEEDLE BAR DRIVE PIN	18	B-4-2
PN-000375	X-Idler Pin A	63	J-1-27
PN-000376	X-Idler Pin B	63	J-1-28
PN-000387	Take-up Driving Lever Bearing Hinge Pin	14	B-1-14
PN-000402	Take-up Driving Lever Pin	14	B-1-17
PN-000405	Presser Foot Driving Pin Stopper Bolt	19	B-5-20
PN-000408	Y-Idler Pin A	37	F-1-14
PN-000409	Y-Idler Pin B	37	F-1-15
PN-000434	Eccentric Pin A for Idler	64	J-1-29
PN-000438	X-Support for Connect Frame Pin	66	J-3-6
PN-000455	Connecting Rod Stud	16	B-3-18
PN-000726	Mes Link Pin	30	D-2-4
RI-000110	Snap Ring	12	A-2-14
SC-000173	Set Screw (M5*L4)	86	O-1-16
SC-000392	FAN Fixing Screw(M4xL30)	70	K-3-23
SC-000393	Fixing Screw for Transformer B	68	K-1-14
SC-000395	Fixing Screw for Switch Cover(Truss)	69	K-2-7
SC-000417	Hex. Socket Bolt (M4*L23)	43	G-1-5
SC-000417	Hex.Socket Bolt(M4)	44	G-1-30
SC-000460	Screw for Base Plate	70	K-3-9
SC-000533	Plus Screw (M3*L6)	83	N-1-14
SC-000629	Screw for LCD (M2×L8)	70	K-3-6
SC-000747	F-KEY Board Screw (ST2.9xL12)	71	K-4-6
SC-001081	Presser foot Fixed Screw	44	G-1-29
SC-001605	Connecting Plate Stud Screw	52	H-3-25
SC-001609	Mes Driving Lever Screw	31	D-3-24
SFAM-1000-03	Y-MOTOR	40	F-3-5
SN-000122	X-Slide Frame Bushing Nut	66	J-3-12
SN-000139	Cap Frame Bushing Nut	65	J-2-29
SP-000153	Presser Foot Pressure Spring	45	G-1-43
SR-000003	E-ring	45	G-1-44
SWF-00000364	Control Box Ass'y	68	K-1-1

Part No.	Part Name	Page	Ref.No
SWF-00000550	Operation Box Ass'y	70	K-3-1
WS-000085	Washer for Picker Base	51	H-2-7
WS-000271	Presser Foot Driving Pin Washer	19	B-5-9
WS-000271	Presser Foot Driving Pin Washer	19	B-5-19
WS-000293	Fiber Washer(@10)	64	J-1-31
WS-000293	Washer (φ10)	37	F-1-4
WS-000298	Hook Shaft Bearing Washer	12	A-2-6
WS-000370	Fiber Washer(@12)	64	J-1-32
WS-000549	Stud Bolt Washer	52	H-3-19

Part No.	Part Name	Page	Ref.No