SWF

PARTS BOOK

E-Series
Dual-small

E-UH1504D-45

PME-110422

Notice

1. 본 책자는Parts Book으로 제작되었으므로 매뉴얼로 사용 불가합니다.
2. 조에 속한 파트는 개별 조립 시 제품의 파손 또는 자수 불량이 발생될 수 있어
   해당 파트에 대한 주문 시에는 조 품목으로만 구입이 가능합니다.
3. 당사의 Part Book은 다음과 같은 순서로 분류되어 있으니
   제품을 구입한 소비자께서는 다음과 같은 순서로 제품을 검색하여 주십시오.

   1) Machine Layout
   2) Section
   3) Part List

※소모성 부품은 자수 기계의 보증 기간과 상관 없음.

1. This is a parts book. It cannot be used as a manual.
2. The parts classified as ass'y items may cause damage to the machine or
   bad embroidery when they are separately assembled.
   Hence, when they are ordered, they can be purchased as ass'y items only.
3. The Part Book is classified as below and users could search products in the following order.

   1) Machine Layout
   2) Section
   3) Part List

※Consumable parts shall not be guaranteed even in warranty period.

Information

A. Structure of Part Book
1. Machine Layout

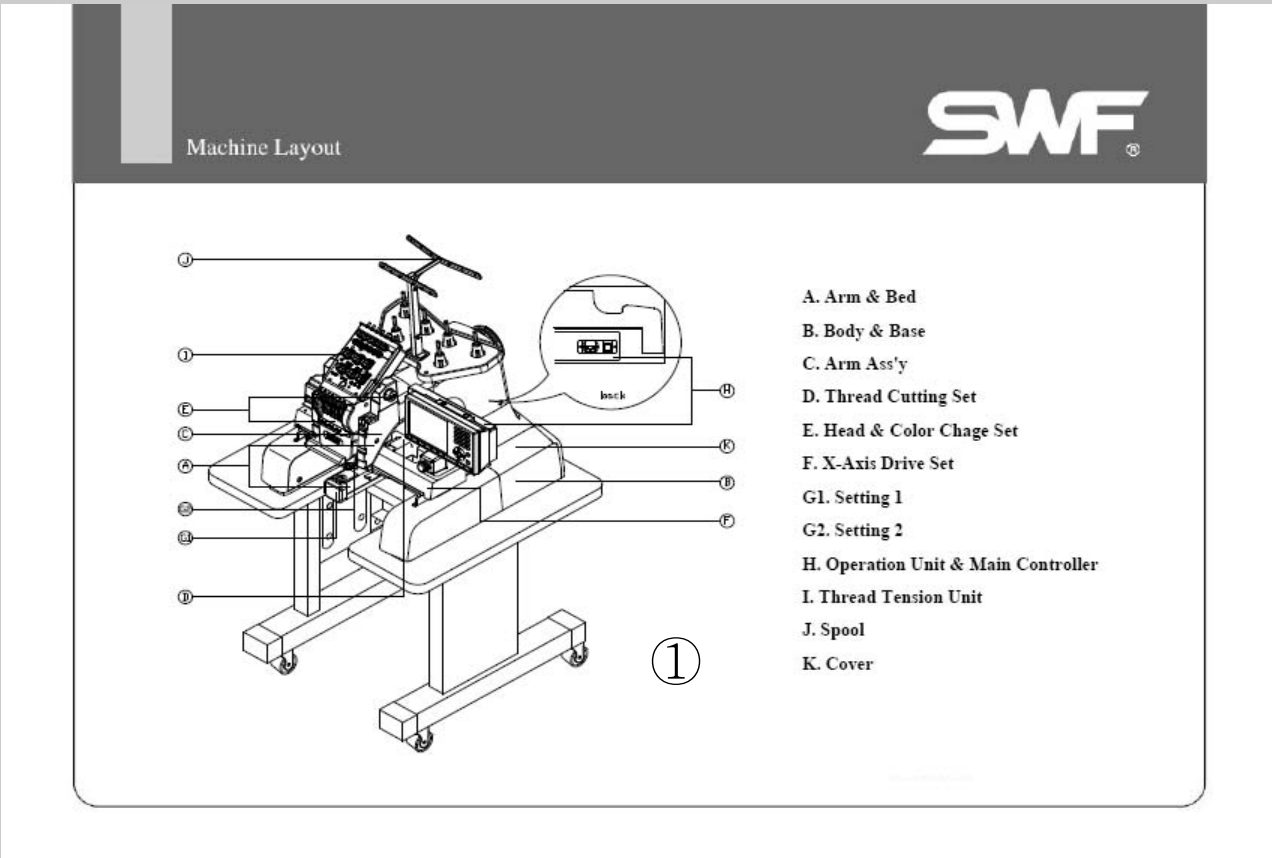

Information

A. Structure of Part Book
  2. Section
    ① : Index Number
    ② : Index Group
    ③ : Related Parts
      Ex) A-1, A-2, A-3...

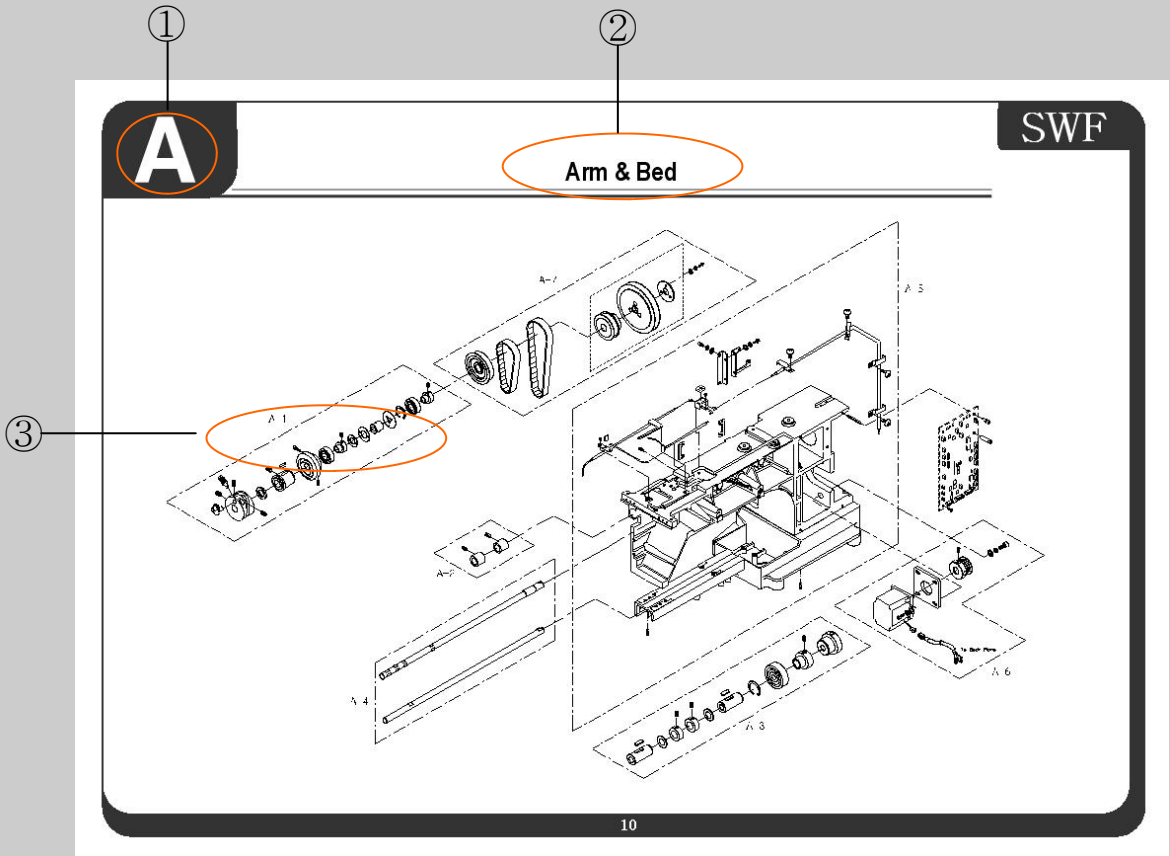

Information

A. Structure of Part Book
3. Part List

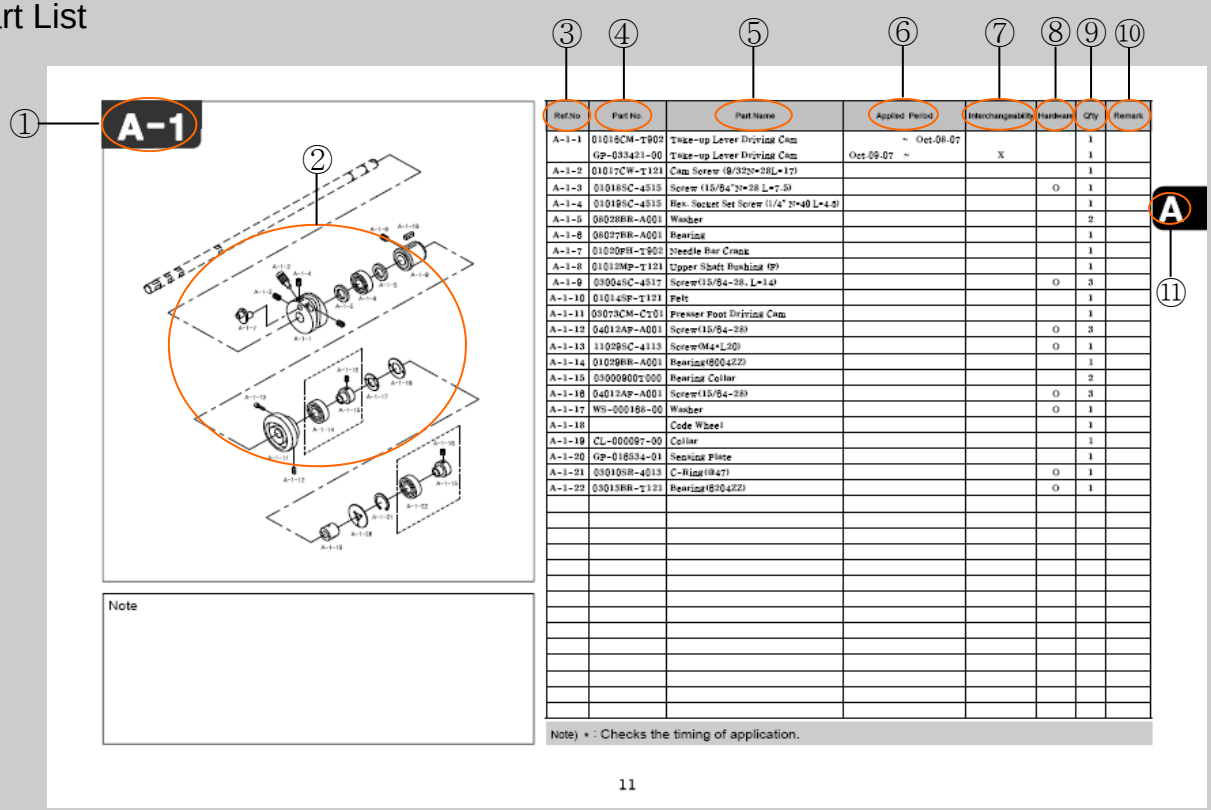

A-1

Note

Ref.No	Part No.	Part Name	Applied Period	Interchangeability	Hardware	Qty	Remark
A-1-1	01016CM-T902	Take-up Lever Driving Cam	~ Oct-08-07			1	
	GP-033421-00	Take-up Lever Driving Cam	Oct-09-07 ~	X		1	
A-1-2	01017CW-T121	Cam Screw (9/32N*28L*17)				1	
A-1-3	010188C-4515	Screw (15/64"N*28 L*7.5)			O	1	
A-1-4	010198C-4515	Hex. Socket Set Screw (1/4" N*40 L*4.5)				1	
A-1-5	08028BR-A001	Washer				2	
A-1-6	08027BR-A001	Bearing				1	
A-1-7	01020FH-T902	Needle Bar Crank				1	
A-1-8	01012MP-T121	Upper Shaft Bushing (9)				1	
A-1-9	030048C-4517	Screw(15/64-28, L=14)			O	3	
A-1-10	01014SF-T121	Felt				1	
A-1-11	03073CM-C101	Presser Foot Driving Cam				1	
A-1-12	04012AP-A001	Screw(15/64-28)			O	3	
A-1-13	110298C-4115	Screw(M4*L20)			O	1	
A-1-14	01029BR-A001	Bearing(6004ZZ)				1	
A-1-15	03000900T000	Bearing Collar				2	
A-1-16	04012AP-A001	Screw(15/64-28)			O	3	
A-1-17	WS-000168-00	Washer			O	1	
A-1-18		Code Wheel				1	
A-1-19	CL-000097-00	Collar				1	
A-1-20	GP-016534-01	Sensing Plate				1	
A-1-21	030108R-4015	C-Ring(Ø47)			O	1	
A-1-22	03013BR-T121	Bearing(6204ZZ)			O	1	

Note) * : Checks the timing of application.

11

① Index Number
Ex) A-1, A-2...

② Part View

Information

A. Structure of Part Book

③ Ref. No

④ Part No

Ex)

Category	CODE	Remark
Old part	16009SC-4113	
New part	**AS**-000000-00	Set parts (Set 구성품)
	GP-000000-00	Instrumental parts (기구적 파트)
	EP-000000-00	Electrical parts (전기적 파트)

⑤ Parts Name : 파트들의 고유 품명을 표기

: Refers to unique names of parts

⑥ Applied Period

Ex1) 2007년2월10일 적용, 2008년7월10일 폐기

-> Feb.10.07 ~ Jul.10.08

Ex1) Applied from Feb. 10, 2007, To on July 10, 2008

-> Feb.10.07 ~ Jul.10.08

Ex2) 2007년 2월 10일 부터 파트북 발행일 까지 적용

-> Feb.10.07 ~

Ex2) Applied from Feb. 10, 2007

-> Feb.10.07 ~

Information

A. Structure of Part Book

⑦ Interchangeability

O : 구 부품을 신 부품으로 교환 가능
신 부품을 구 부품으로 교환 가능
: It is interchangeable between old and new part.

X : 구 부품을 신 부품으로 교환 불가능
신 부품을 구 부품으로 교환 불가능
: It is not interchangeable between old and new part.

△ : 구 부품을 신 부품으로 교환 가능
신 부품을 구 부품으로 교환 불가능
: It is interchangeable by new part only.

Interchangeability		
O	X	△
Old -> New: OK New -> Old : OK	Old -> New: NO New -> Old : No	Old -> New: OK New -> Old : No

⑧ Hardware : 시중에서 구매 할 수 있는 부품
: Parts that can be purchased in the market

⑨ Q'ty : 사용 파트의 수량을 표기
: Quantity of part

⑩ Remark

⑪ Index Number

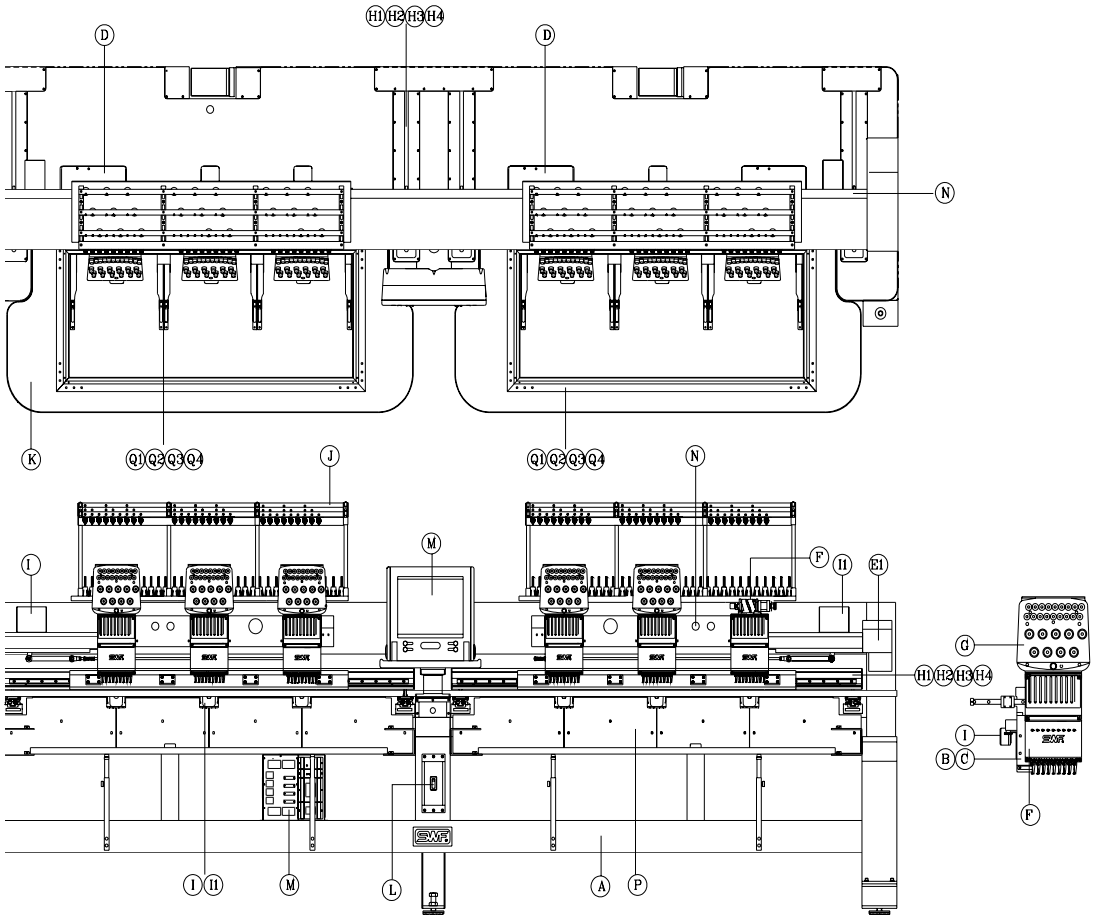

A Machine Body Ass'y
B Arm 1
C Arm 2
D Thread Cutting Set
E Main Drive System I
E1 Main Drive System II
F Head & Color Change Set
G Thread Tension Unit
H1 XY-Axis Drive System(UH1504D)
H2 XY-Axis Drive System(UH1506D)
H3 XY-Axis Drive System(UH1208D)
H4 XY-Axis Drive System(UH1512D)
I Settingt I
I1 Setting II
J Spool
K Table
L Cable
M Control Box & O/P Box
N LAMP & SWITCH
O Bobbin Winder
P Cover
Q1 Frame(UH1504D)
Q2 Frame(UH1506D)
Q3 Frame(UH1508D)
Q4 Frame(UH1512D)

CONTENT

A	Beam Body & Bed	10
B	Arm 1	13
C	Arm 2	20
D	Thread Cutting Set	26
E	Main Drive System 1	32
E1	Main Drive System 2	38
F	Head & Color Change	44
G	Thread Tension Unit	51
H1	X-Y Drive (UH1504D-45)	55
H2	X-Y Drive (UH1506D-45)	63
H3	X-Y Drive (UH1508D-45)	71
H4	X-Y Drive (UH1512D-45)	80
I	Setting 1	89
I1	Setting 2	95
J	Spool	100
K	Table	103
L	Cable	112
M	Con Box & O/P Box	119
N	Lamp & Switch	124
O	Bobbin Winder	129
P	Cover	132
Q1	Frame (UH1504D)	135
Q2	Frame (UH1506D)	139
Q3	Frame (UH1208D)	143
Q4	Frame (UH1512D)	147
R	Index	151

Beam Body & Bed

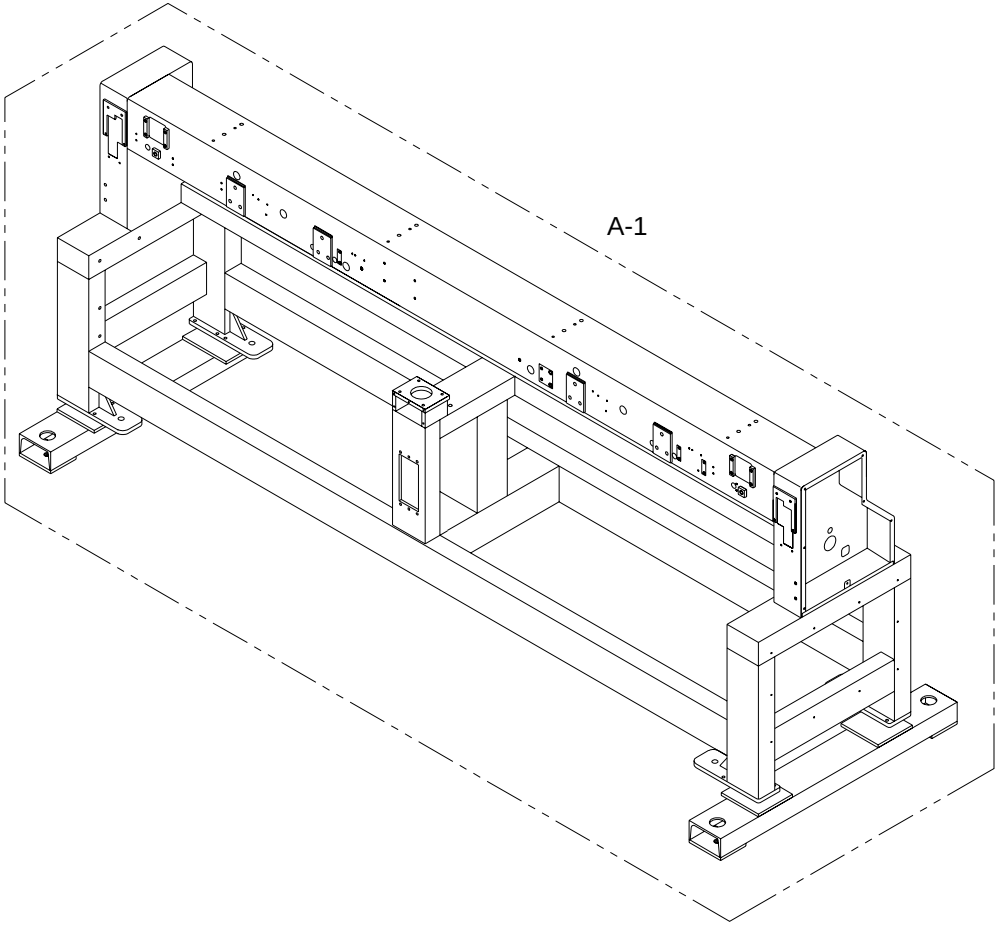

A-2

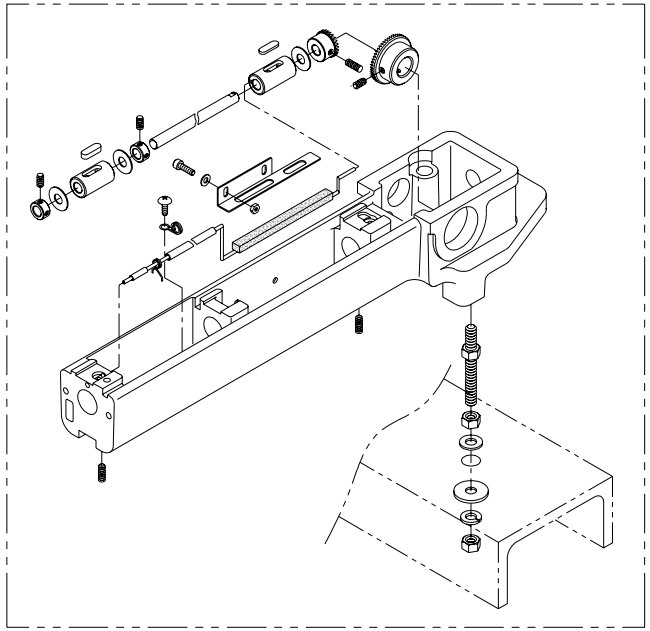

A-1

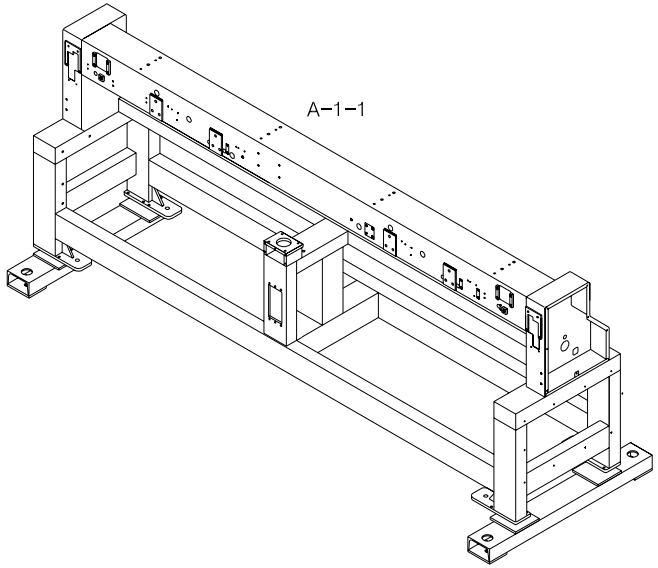

Note

Ref.No	Part No.	Part Name	Application date	Interchangeability	Hardware	Q'ty	Remarks
A-1-1	GP-016766-00	BEAMBODY SET UH1504D-45	Mar,29,06 ~ Nov,16,06			1	
	GP-016766-01		Nov,17,06 ~ Nov,03,08			1	
	GP-016766-02		Nov,04,08 ~			1	
	GP-014993-00	BEAMBODY SET UH1506D-45	Feb,04,06 ~ Nov,16,06	X		1	
	GP-014993-01		Nov,17,06 ~	X		1	
	GP-016767-00	BEAMBODY SET UH1208D-45	Feb,04,06 ~ Nov,16,06	X		1	
	GP-016767-01		Nov,17,06 ~	X		1	
	GP-016768-00	BEAMBODY SET UH1512D-45	Mar,29,06 ~ Nov,06,06	X		1	
	GP-016768-01		Nov,07,06 ~ Nov,77,08	X		1	
	GP-016768-02		Nov,04,18 ~	X		1	

A

A-2

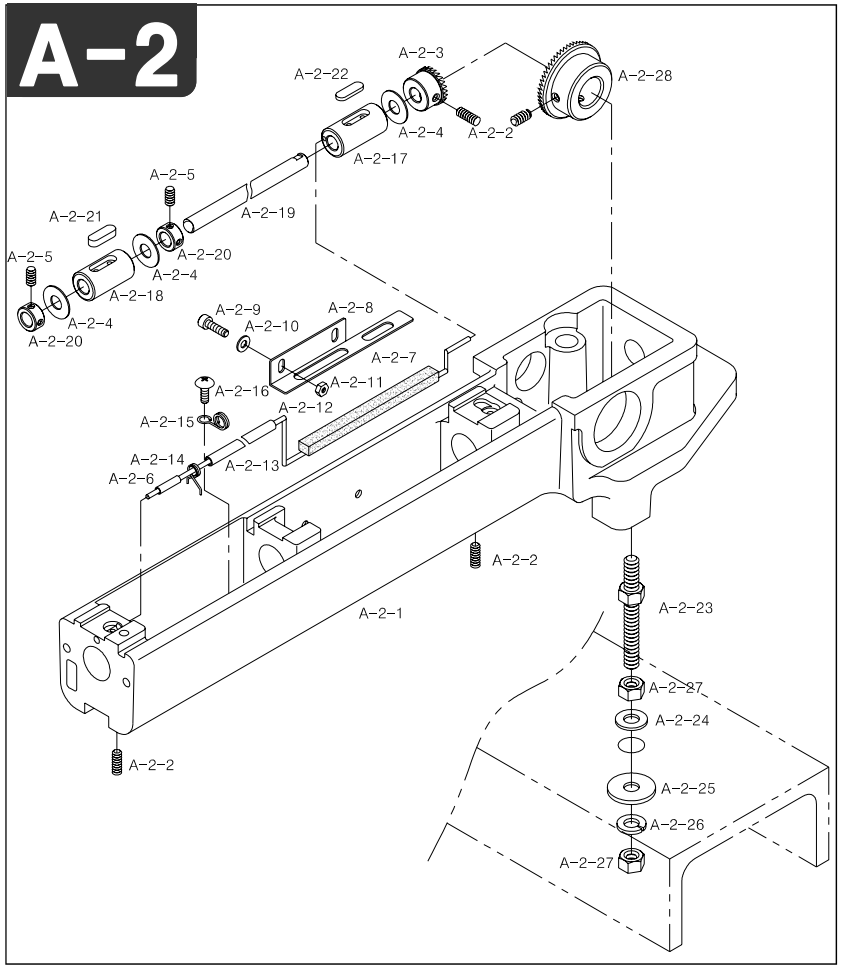

Note

Ref.No	Part No.	Part Name	Application date	Interchangeability	Hardware	Q'ty	Remarks
A-2-1	GP-005355-00	Bed "A"		X		6	
	01200100UH00	Bed		△		2	
A-2-2	04012AF-A001	Hook Shaft Bush Screw			O	36	
A-2-3	04019GA-UK01	Hook Shaft Gear				6	
A-2-4	02004BR-T121	Hook Shaft Bearing Washer				18	
A-2-5	08113SC-A001	Collar Screw			O	24	
A-2-6	32045CW-T121	Oil Hose Pin				6	
A-2-7	18041SF-UK01	Bed Felt				6	
A-2-8	32040PR-T121	Bed Felt Cover				6	
A-2-9	02023SC-7113	Hex. Socket Bolt (M4*L8)			O	12	
A-2-10	02063SW-1111	Washer(@4)			O	12	
A-2-11	05016SN-1211	Hex.Nut (M4)			O	12	
A-2-12	18044ET-UK01	Wick L=400				6	
A-2-13	18045ET-UK01	Oil Hose L=160				6	
A-2-14	32046SP-T121	Holder For Oil Hose				6	
A-2-15	32021SP-T121	Needle Bar Hose Holder "B"				6	
A-2-16	28021SC-3123	Truss Screw (M3*L4)				6	
A-2-17	GP-016953-00	Hook Shaft Rear Bushing			O	6	
A-2-18	GP-016931-00	Hook Shaft Front Bushing				6	
A-2-19	02100300U000	Hook Shaft				6	
A-2-20	03707300A000	Solenoid Collar				12	
A-2-21	32043SF-T121	Front Bushing Felt				6	
A-2-22	18039SF-UK01	Felt				6	
A-2-23	04028SC-UK01	STUD BOLT (M10*P1.25*L69)				18	
A-2-24	04013PR-B001	WASHER (3.2T-@10)				18	
A-2-25	04014PR-B001	WASHER (2T-@10)				18	
A-2-26	16029SW-3115	SPRING WASHER (10@)			O	18	
A-2-27	04032SN-UK01	HEX. NUT (M10*P1.25)			O	36	
A-2-28	01101700U000	LOW SHAFT GEAR				6	

Arm 1

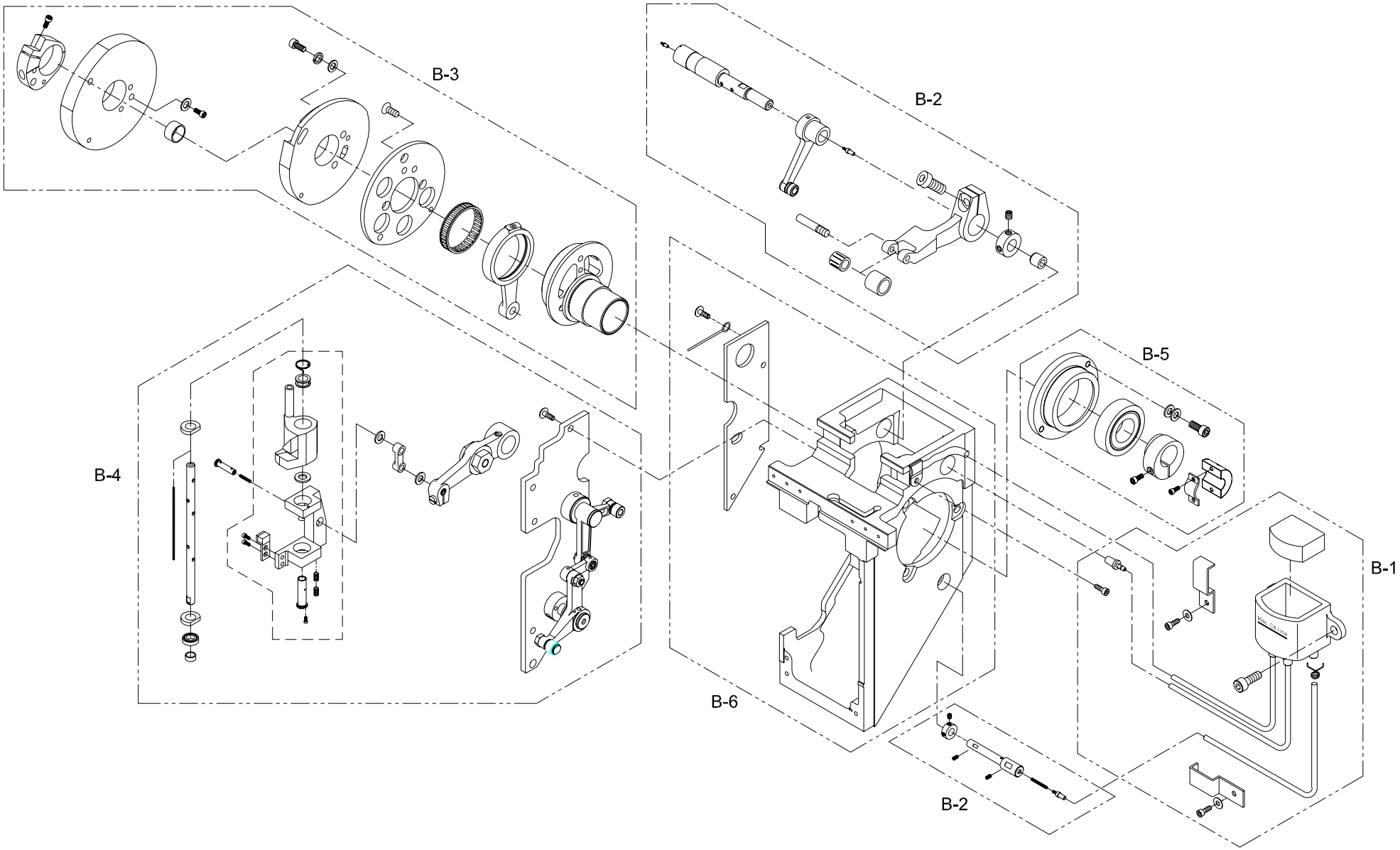

B-1

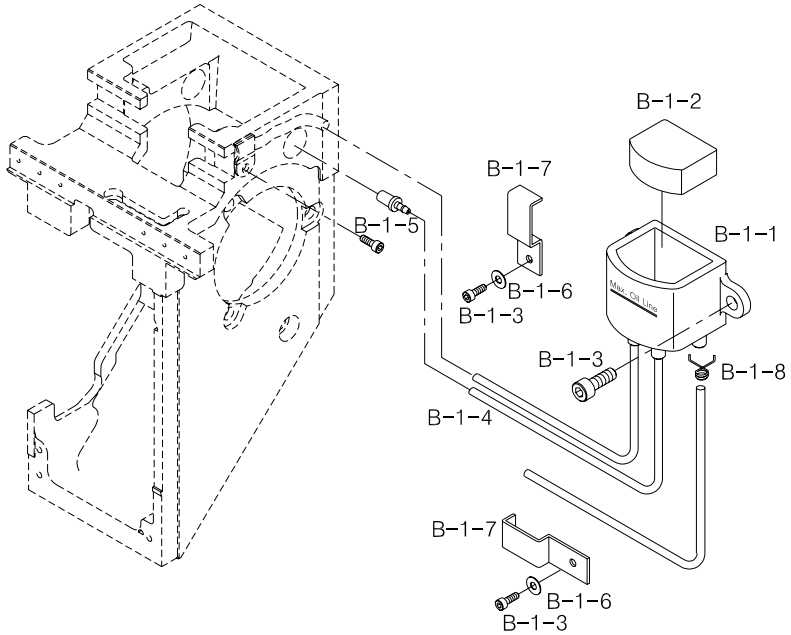

Note

Ref.No	Part No.	Part Name	Application date	Interchangeability	Hardware	Q'ty	Remarks
B-1-1	GP-009589-00	Oil Tank Ass'Y				6	
B-1-2	GP-009590-00	Oil Tank Felt				6	
B-1-3	02023SC-7113	Hex. Socket Bolt (M4*L8)			O	24	
B-1-4	18045ET-UK01	Oil Hose L=160				24	
B-1-5	03000500U000	Oil Tube Pin				18	
B-1-6	18015SW-3111	WASHER (4@)			O	12	
B-1-7	18033PR-UK01	OIL TUBE GUIDE				12	
B-1-8	32046SP-T121	HOLDER FOR OIL HOSE				18	

B

B-2

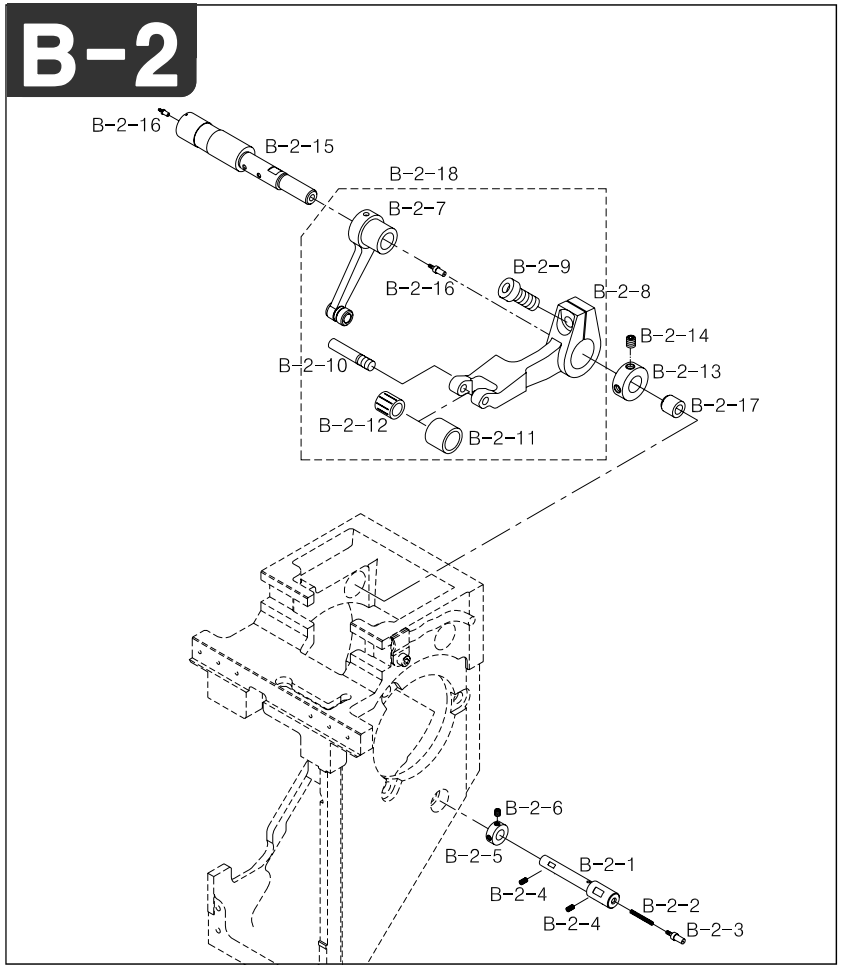

Note

Ref.No	Part No.	Part Name	Application date	Interchangeability	Hardware	Q'ty	Remarks
B-2-1	03301800U000	NEEDLE BAR DRIVE PIN				4	
B-2-2	32003ET-T121	Wick				4	
B-2-3	01301600H000	Hook Oil Supply Nipple				8	
B-2-4	03020SC-A001	Drive Pin Screw 11/64,N40,L8				4	
B-2-5	01101300A000	Hook Shaft Collar				8	
B-2-6	04012AF-A001	Hook Shaft Bush Screw			O	4	
B-2-7	02010SC-A001	Take-Up Driving Lever "A"				4	
B-2-8	GP-011914-00	Take-Up Driving Lever "B"				4	
B-2-9	07016SC-7113	Hex.Socket Bolt(M4*L12)			O	4	
B-2-10	04019CW-T121	Pin Stud Screw				4	
B-2-11	04020AF-T121	Roller for Take-Up Lever B				4	
B-2-12	04021BR-T121	Needle Bearing (KT367N IKO)				4	
B-2-13	03302100A000	Pin Collar				4	
B-2-14	03022SC-4517	Hex.Socket Set Screw(M4*L5)			O	8	
B-2-15	03301000B000	TAKE-UP LEVER PIN				4	
B-2-16	01301600H000	Hook Oil Supply Nipple				12	
B-2-17	03301200A000	Bushing				4	
B-2-18	038A0000B000	Take-Up Driving Lever A/B Assy				20	

B

B-3

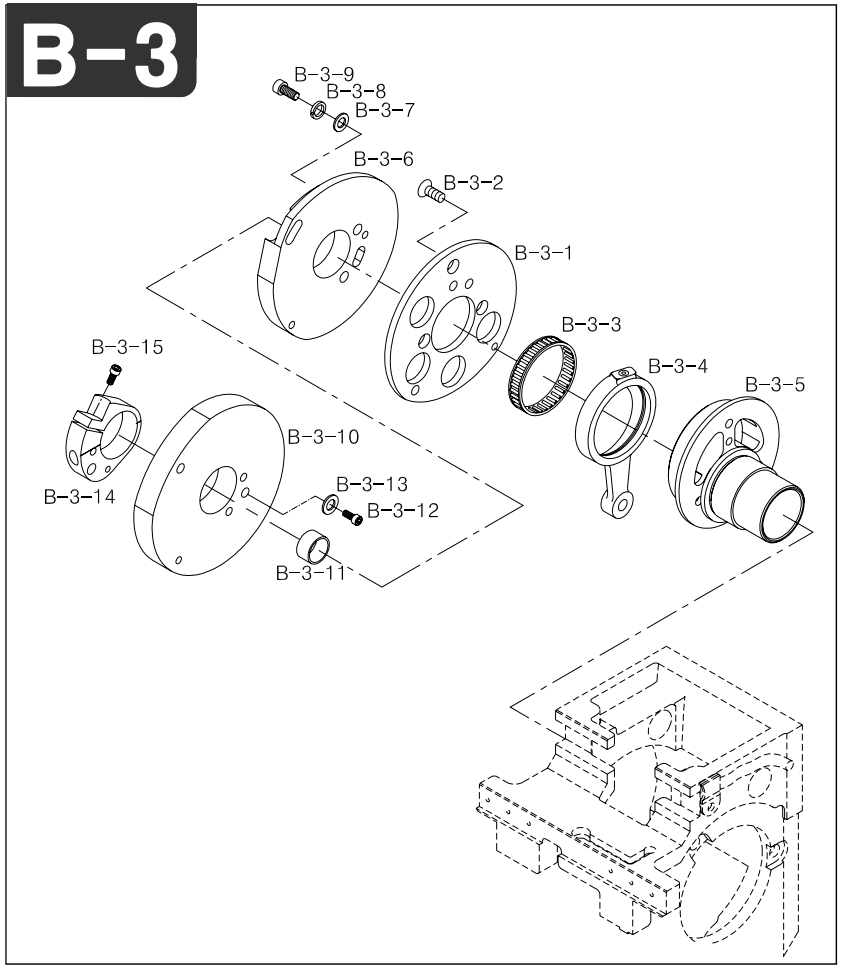

Note

Ref.No	Part No.	Part Name	Application date	Interchangeability	Hardware	Q'ty	Remarks
B-3-1	GP-011938-00	CAM BASE	Sep,14,05 ~ May,27,08	X		4	
	GP-011938-01		May,28,08 ~	△		4	
B-3-2	03007SC-A001	Cam Base Screw				12	
B-3-3	03302900H000	NEEDLE CASE (KT-42469)				4	
B-3-4	03303000H000	Connecting Rod				4	
B-3-5	GP-011932-00	NEEDLE BAR DRIVING CAM				4	
B-3-6	GP-011915-00	Take-Up Lever Driving Cam				4	
B-3-7	06003SW-2111	Washer (@4)			O	4	
B-3-8	06003SW-2111	Washer (@4)			O	8	
B-3-9	02023SC-7113	Hex. Socket Bolt (M4*L8)			O	8	
B-3-10	GP-027117-00	PRESSER FOOT DRIVING CAM	Feb,28,07 ~ Dec,01,08	X		4	
	GP-027117-01		Dec,02,08 ~	△		4	
B-3-11	GP-014939-00	Cam Spacer				4	
B-3-12		Screw				12	
B-3-13		Washer				12	
B-3-14	GP-014783-00	Presser Foot Cam Boss	Jan,23,06 ~ Oct,22,06	X		4	
	GP-014783-01		Oct,23,06 ~ Nov,11,06	△		4	
	GP-014783-02		Nov,12,06 ~ May,13,07	△		4	
	GP-014783-03		May,14,07 ~ Dec,17,07	△		4	
	GP-014783-04		Dec,18,07 ~	△		4	
B-3-15	08113SC-A001	COLLAR SCREW 11/64,N=40,L6			O	4	

B

B-4

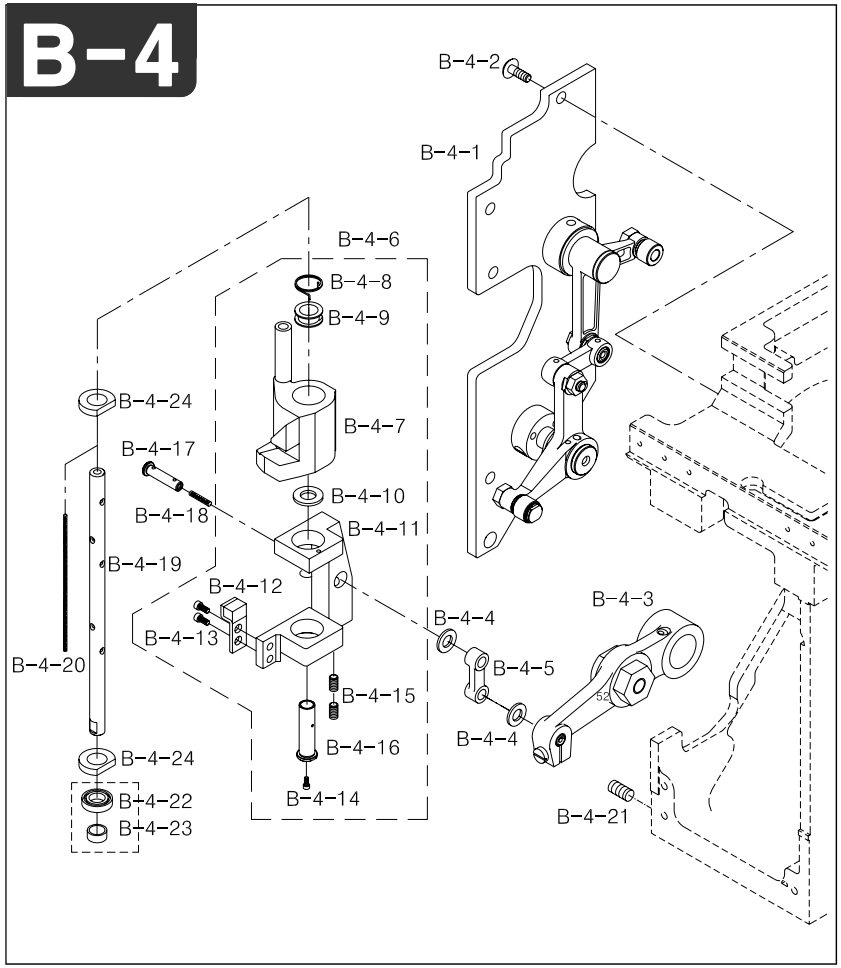

Note

Ref.No	Part No.	Part Name	Application date	Interchangeability	Hardware	Q'ty	Remarks
B-4-1	AS-002145-00	ARM SIDE COVER ASS'Y	Apr,07,05 ~ May,12,05	X		4	
	AS-002145-01		May,13,05 ~ Sep,01,05	△		4	
	AS-002145-02		Sep,02,05 ~ Aug,21,06	△		4	
	AS-002145-03		Aug,22,06 ~	△		4	
B-4-2	02010SC-A001	SCREW (9/64,N40,L8)			O	8	
B-4-3	03313200I000	NEEDLE BAR DRIVE LEVER(SET)				4	
B-4-4	03034SW-A001	Reciprocator Washer				4	
B-4-5	03003200A000	Needle Bar Drive Rink				4	
B-4-6	AS-003447-00	Needle Bar Reciprocator A'ssy				4	
B-4-7	036002001000	Needle Bar Reciprocator				4	
B-4-8	03045SP-B001	Jump Spring				4	
B-4-9	03046CW-B001	Jump Spring Guide				4	
B-4-10	03048SW-A001	Reciprocator Washer				4	
B-4-11	036001001000	Needle Bar Driving Shaft Driver				4	
B-4-12	03047PM-CT01	Stopper-A'ssy				4	
B-4-13	26006MC-8118	Stopper Screw (M2.6*L6)			O	8	
B-4-14	09005SC-3123	Truss Screw (M3*L6)			O	4	
B-4-15	03020SC-A001	Drive Pin Screw 11/64,N40,L8				4	
B-4-16	GP-012048-00	NEEDLE BAR DRIVING SHAFT BUSH				4	
B-4-17	03033CW-A001	Driver Pin				4	
B-4-18	32003ET-T121	Wick				4	
B-4-19	GP-013117-00	Needle Bar Driving Shaft				4	
B-4-20	32003ET-T121	Wick				4	
B-4-21	03020SC-A001	Drive Pin Screw 11/64,N40,L8			O	4	
B-4-22	03008000H000	Ball Bearing 6800				4	
B-4-23	03008100K000	Needle Bar Drive Bearing Bush				4	
B-4-24	03042SF-T121	FELT "A"				8	

B

B-5

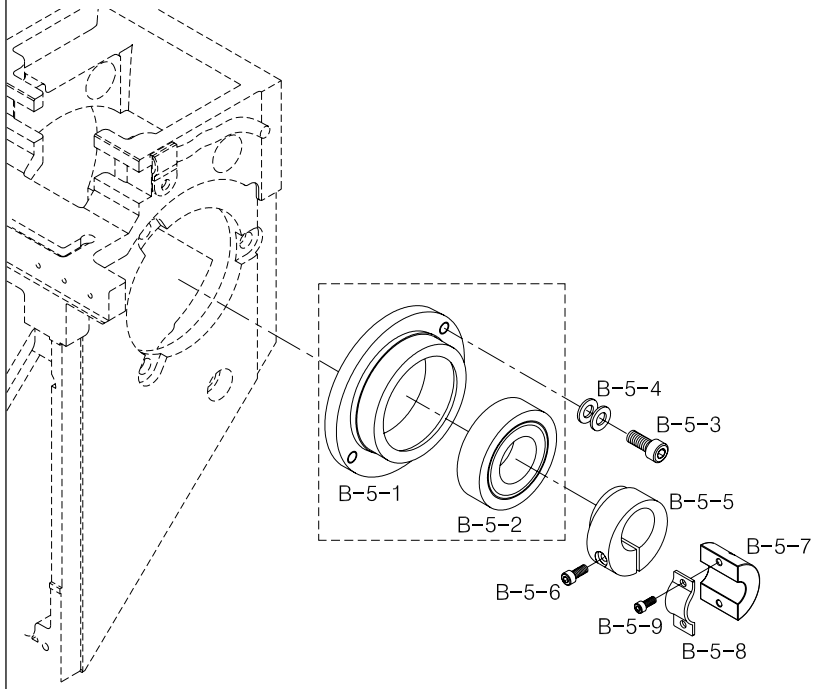

Note

Ref.No	Part No.	Part Name	Application date	Interchangeability	Hardware	Q'ty	Remarks
B-5-1	03303100H000	Bearing Case A @20				4	
B-5-2	01001100H000	Ball Bearing (6005Zz)			O	4	
B-5-3	02031SC-7113	Hex. Socket Screw(M5*L10)			O	4	
B-5-4	02030SW-B001	Washer (5@)			O	24	
B-5-5	03000110H000	Cam Tightening Collar (@20)				4	
B-5-6	03016SC-4113	Hex. Socket Bolt (M5*L15)			O	4	
B-5-7	03008700H000	Balance Cam				4	
B-5-8	03008800H000	Balance Cam Bracket				4	
B-5-9	18047SC-7113	Hex. Socket Bolt (M5*L15)			O	8	

B

B-6

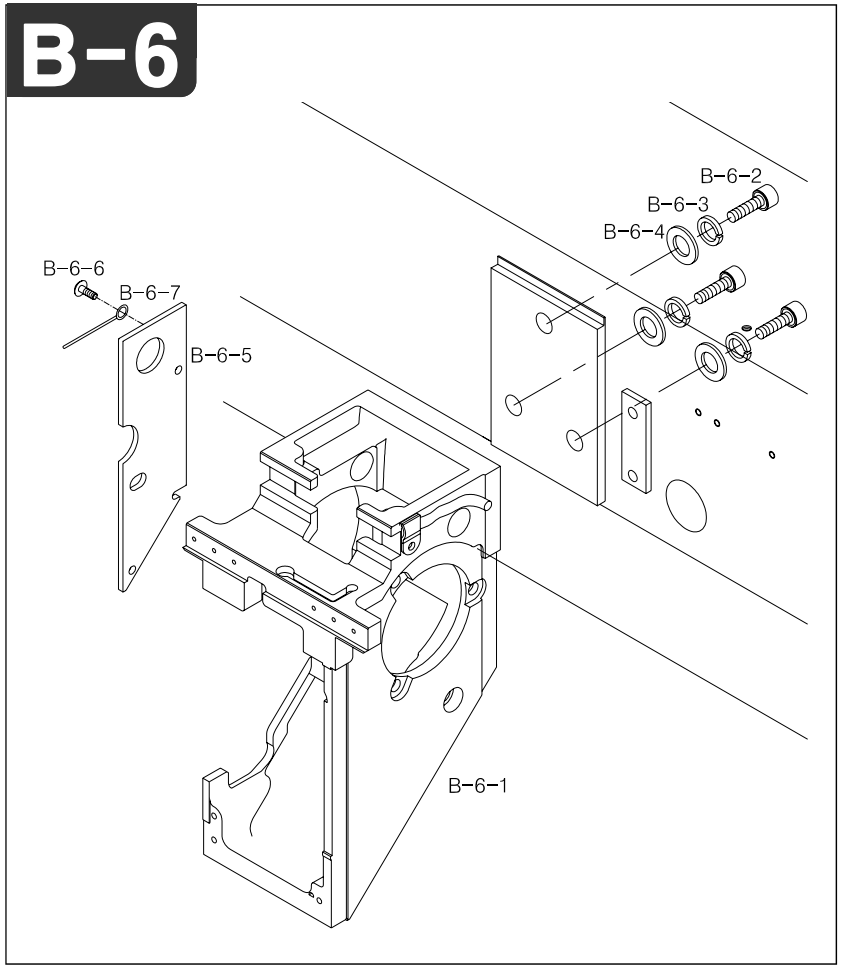

Note

Ref.No	Part No.	Part Name	Application date	Interchangeability	Hardware	Q'ty	Remarks
B-6-1	GP-011943-00	ARM				4	
B-6-2	03003SC-4113	Hex. Socket Bolt				12	
B-6-3	15095SW-3115	Spring Washer (@8)			O	12	
B-6-4	04029SW-A001	Stud Bolt Washer(S) (@8)			O	12	
B-6-5	GP-011912-00	ARM SIDE COVER B	Sep,14,05 ~ Jan,08,07	X		4	
	GP-011912-01		Jan,09,07 ~	△		4	
B-6-6	02010SC-A001	SCREW (9/64,N40,L8)			O	8	
B-6-7	03062ET-A001	Cable Fastener				8	

B

Arm 2

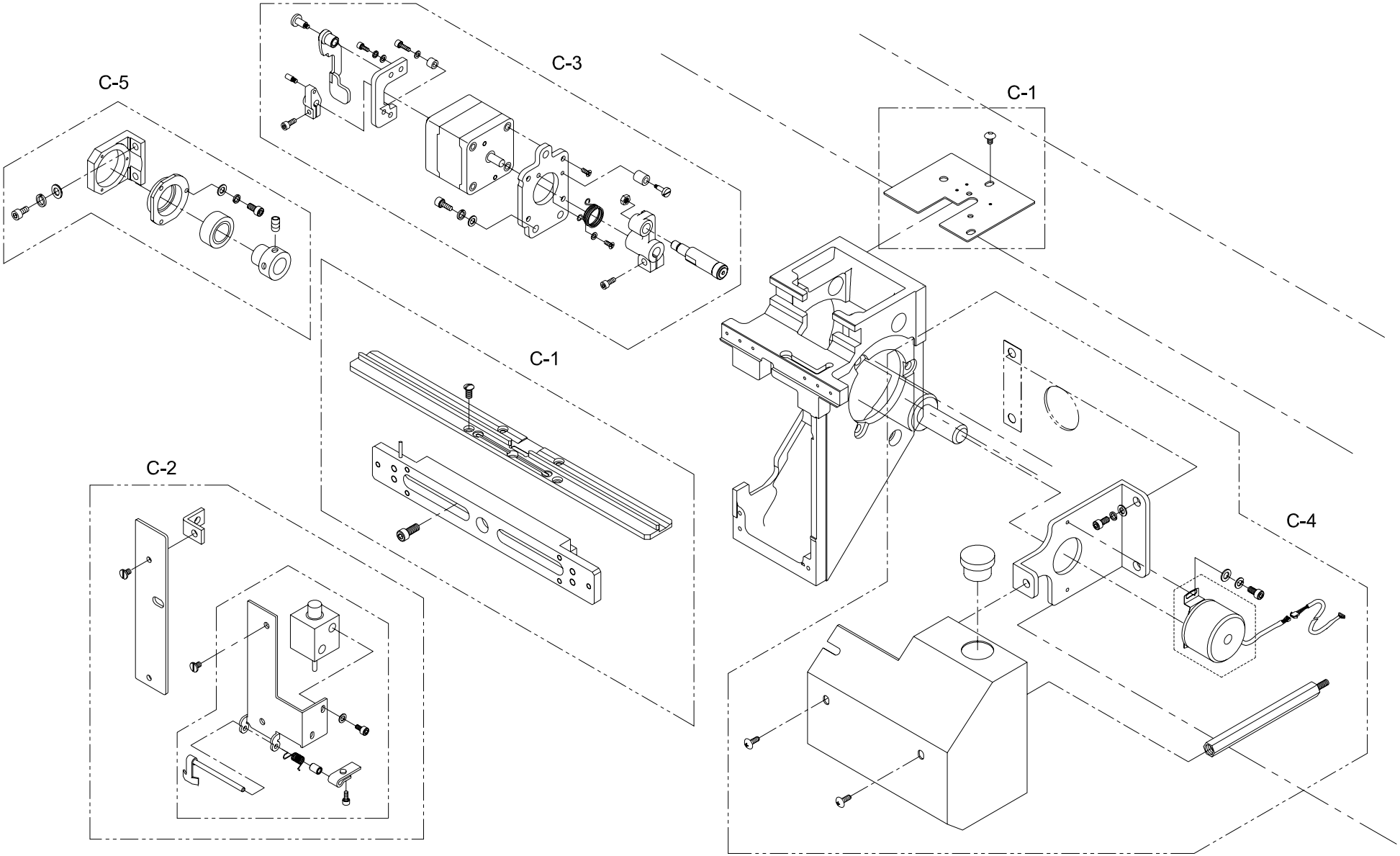

C-1

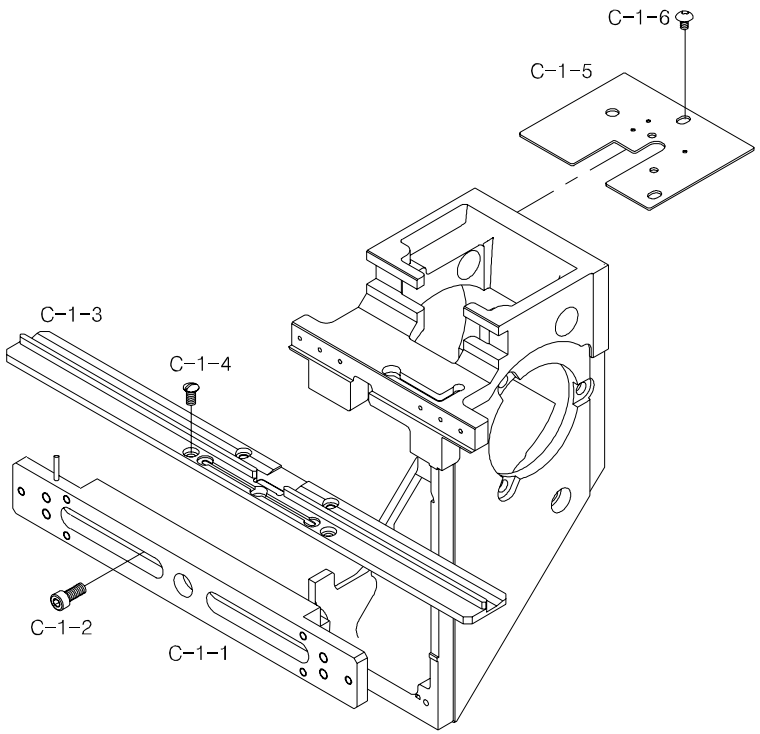

Note

Ref.No	Part No.	Part Name	Application date	Interchangeability	Hardware	Q'ty	Remarks
C-1-1	03069LM-B002	Lm Guide Block Set (9C)				6	
	03068LM-BB00	Lm Guide Block Set (12C)				6	
	03068LM-H003	Lm Guide Block Set (15C)				6	
C-1-2	03071SC-A001	Hex.Scoket Bolt (M3*L15)			O	6	
C-1-3	07026AD-A002	Take-Up Guide Rail L=250 (9C)				6	
	03300604U000	Take-Up Guide Rail L=329 (12C)				6	
	01300105U000	Take-Up Guide Rail (L) (15C)				2	
	01300205U000	Take-Up Guide Rail (M) (15C)				2	
	01400105U000	Take-Up Guide Rail (R) (15C)				2	
C-1-4	05041SC-A001	Guide Rail Serew				24	
C-1-5	GP-007248-00	ARM TOP COVER				4	
C-1-6	18033SC-3123	Truss Screw (M5*L6)			O	4	

C

C-2

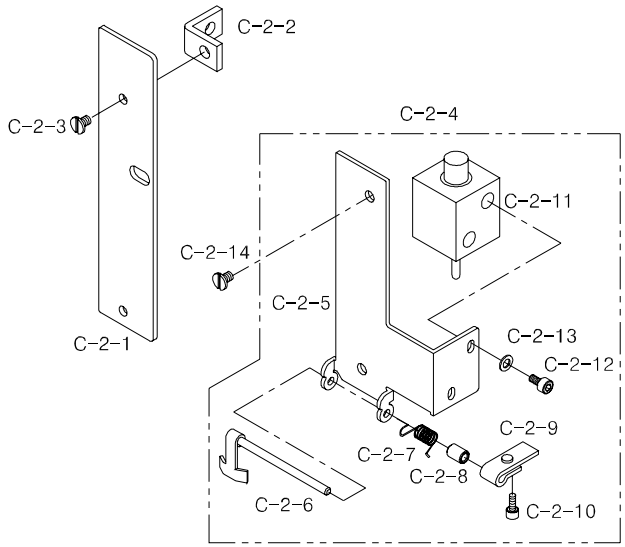

Note

Ref.No	Part No.	Part Name	Application date	Interchangeability	Hardware	Q'ty	Remarks
C-2-1	03008200I000	Arm Guard Plate(L)				6	
C-2-2	03008300I000	Arm Guard Plate(L) Bracket				12	
C-2-3	02009SC-A001	Side Cover Screw				6	
C-2-4	AS-000858-00	UPPER THREAD HOLDING SET				6	
C-2-5	03303800I000	Arm Guard Plate(R)				6	
C-2-6	03304100I000	Thread Holding Lever Ass'y				6	
C-2-7	03304200I000	Lever Spring				6	
C-2-8	03304300I000	Lever Spring Bush.				6	
C-2-9	03304400I000	Thread Holding Push Plate				6	
C-2-10	07035SC-7113	Hex.Scoket Bolt (M3*L6)			O	6	
C-2-11	10009EL-A002	UPPER THREAD CATCHER SOL.				6	
C-2-12	05007SC-7113	Hex.Scoket Bolt (M3*L5)			O	12	
C-2-13	06011SW-2111	Washer (@3)			O	12	
C-2-14	03065SC-A001	Guard Plate Screw				6	

C

C-3

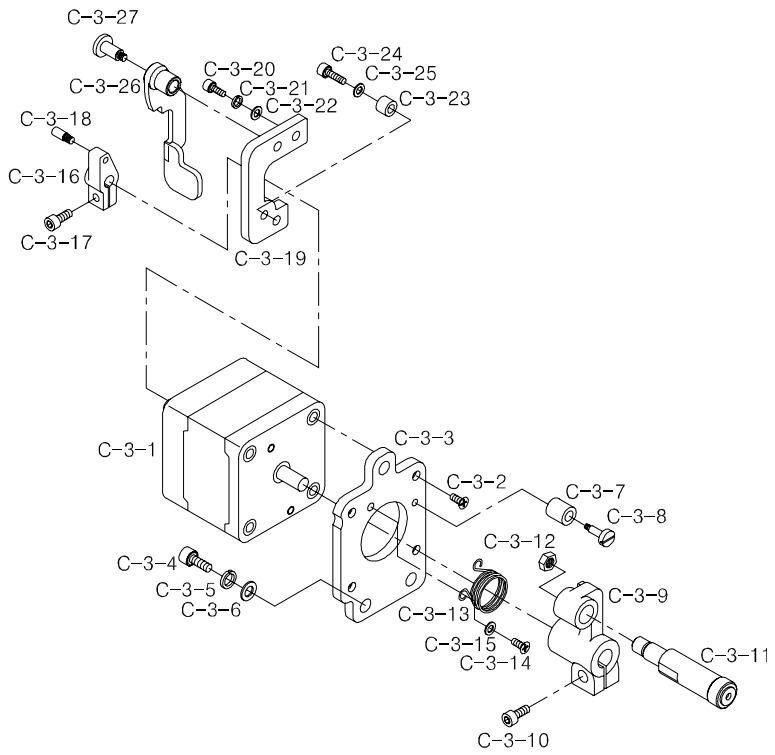

Note

Ref.No	Part No.	Part Name	Application date	Interchange-ability	Hard-ware	Q'ty	Remarks
C-3-1	03410200H000	Jump Motor				6	
C-3-2	02002SC-7119	Plus Screw (M4*L8)			O	24	
C-3-3	03410100I000	Jump Motor Base				6	
C-3-4	07016SC-7113	Hex.Scoket Bolt (M4*L10)			O	12	
C-3-5	18014SW-3115	Spring Washer (@4)			O	12	
C-3-6	06003SW-2111	Washer (@4)			O	12	
C-3-7	03410300H000	Jump Crank Stopper				12	
C-3-8	03411400H000	Stud for Jump Crank Stopper				6	
C-3-9	GP-008769-00	Jump Driving Crank	Apr,22,05 ~ Jun,06,05	X		6	
	GP-008769-01		Jun,07,05 ~	△		6	
C-3-10	02023SC-7113	Hex. Socket Bolt (M4*L8)			O	6	
C-3-11	03411810I000	Jump Crank Roller Ass'y				6	
C-3-12	03031SN-A001	Pin. Nut (11/64-N=40)				6	
C-3-13	03410800I000	Jump Retrun Spring				6	
C-3-14	08006SC-8118	Plus Screw (M3*L5)			O	6	
C-3-15	06011SW-2111	Washer (@3)			O	6	
C-3-16	03410900H000	Jump Driving Clutch				6	
C-3-17	02023SC-7113	Hex. Socket Bolt (M4*L8)			O	6	
C-3-18	03411000H000	Jump Clutch Pin				6	
C-3-19	03411100I000	Jump Clutch Base				6	
C-3-20	22006SC-7113	Hex.Scoket Bolt (M3*L8)			O	6	
C-3-21	11019SW-9115	Spring Washer (3@)			O	6	
C-3-22	06011SW-2111	Washer (@3)			O	6	
C-3-23	03304900H000	Jump Clutch Lever Stopper				6	
C-3-24	04010MC-7113	Hex.Scoket Bolt (M4*L10)			O	6	
C-3-25	06011SW-2111	Washer (@3)			O	6	
C-3-26	03411200I000	Jump Driving Clutch Lever				6	
C-3-27	03411300H000	Stud for Jump Clutch Lever				6	

C

C-4

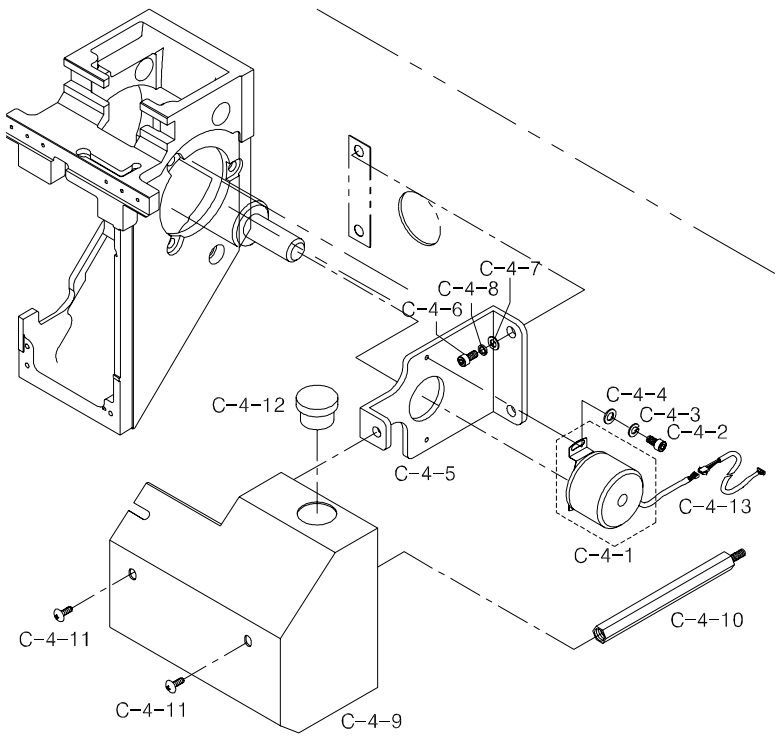

Note

Ref.No	Part No.	Part Name	Application date	Interchangeability	Hardware	Q'ty	Remarks
C-4-1	03013EL-T121	Encoder Set				1	
C-4-2	07035SC-7113	Bracket Screw (M3*L6)			O	2	
C-4-3	08011SW-1111	Spring Washer (@3-S)			O	2	
C-4-4	06011SW-2111	Washer (@3)			O	2	
C-4-5	05000100H000	Encoder Base				1	
C-4-6	08076SC-7113	Hex. Socket Bolt (M5*L12)			O	4	
C-4-7	16018SW-1111	Washer (@5)			O	2	
C-4-8	18048SW-3115	Spring Washer (@5)			O	2	
C-4-9	01002200UH60	Oil Tank Cover (L) UH1504D				1	
	01002200UH60	Oil Tank Cover (L) UH1506D				1	
	01002200UH60	Oil Tank Cover (L) UH1208D				1	
	GP-005065-00	Oil Tank Cover (L) UH1512D				1	
C-4-10	18036CW-UK06	Oil Tank Cover Support				1	
C-4-11	05008MC-9123	TRUSS SCREW(M5*L8) SUS			O	2	
C-4-12	01303800U000	Cover Rubber Cap				1	
C-4-13	25105ET-B001	Encoder Connector				1	

C

C-5

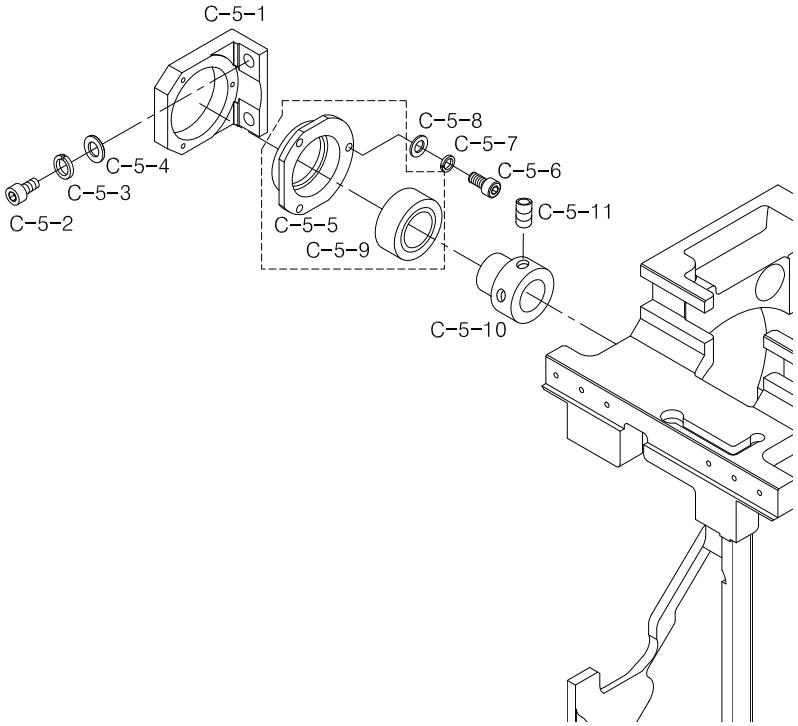

Note

Ref.No	Part No.	Part Name	Application date	Interchangeability	Hardware	Q'ty	Remarks
C-5-1	GP-050887-00	Top Shaft Bracket "C"				1	
C-5-2	08087SC-7113	Hex. Socket Bolt (M8*L25)			O	2	
C-5-3	15095SW-3115	Spring Washer (@8)			O	2	
C-5-4	04029SW-A001	Stud Bolt Washer(S) (@8)			O	2	
C-5-5	03008500H000	Top Shaft Bearing Case "B"				1	
C-5-6	03016SC-4113	Hex. Socket Bolt (M5*L15)			O	3	
C-5-7	18048SW-3115	Spring Washer (5@)			O	3	
C-5-8	18049SW-3111	Washer (@5)			O	3	
C-5-9	01001100H000	Ball Bearing (6005Zz)			O	1	
C-5-10	03005210H000	Collar "A"				1	
C-5-11	14060AF-4517	Hex.Socket Screw(M6*L6)			O	2	

C

Thread Cutting Set

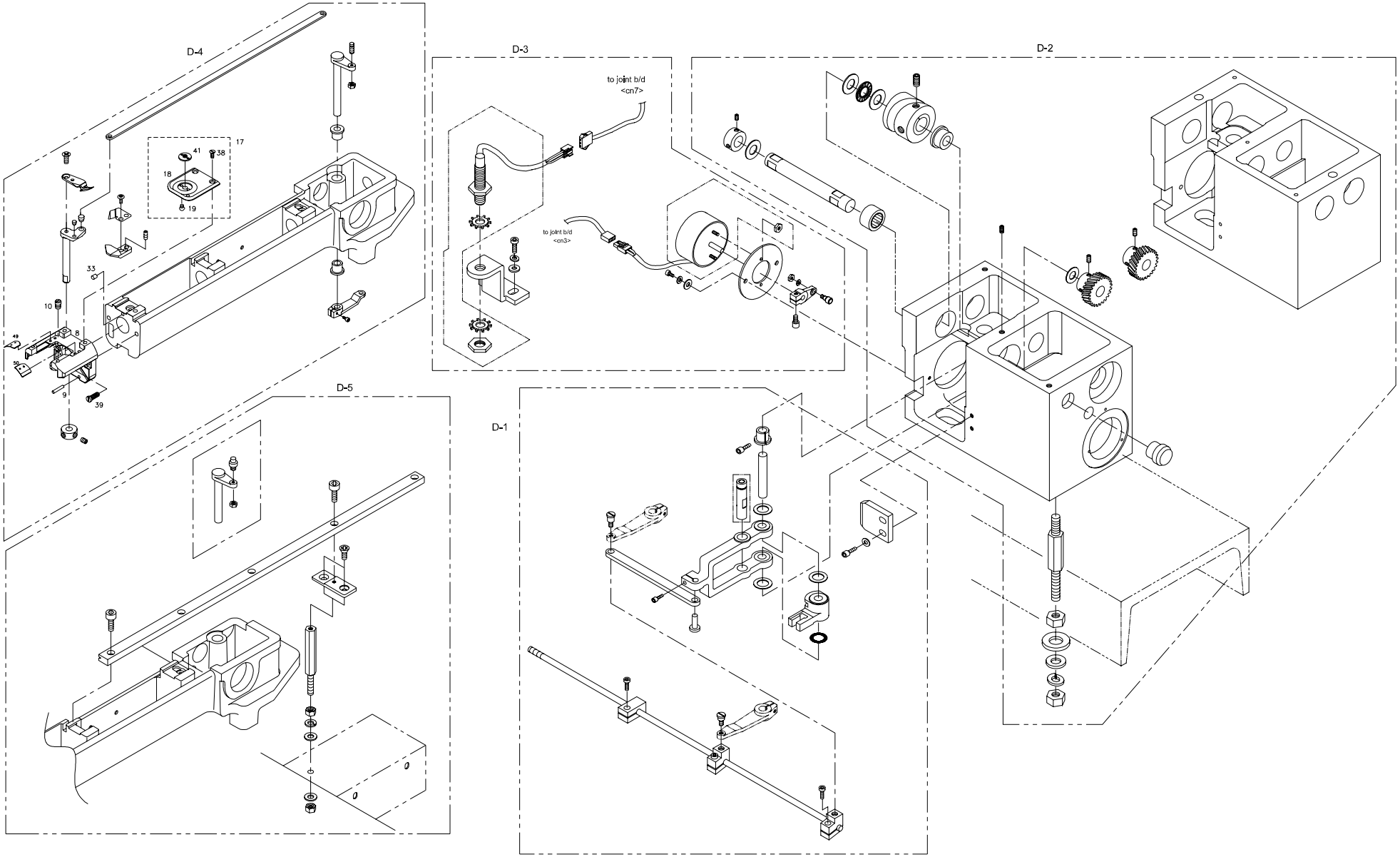

D-1

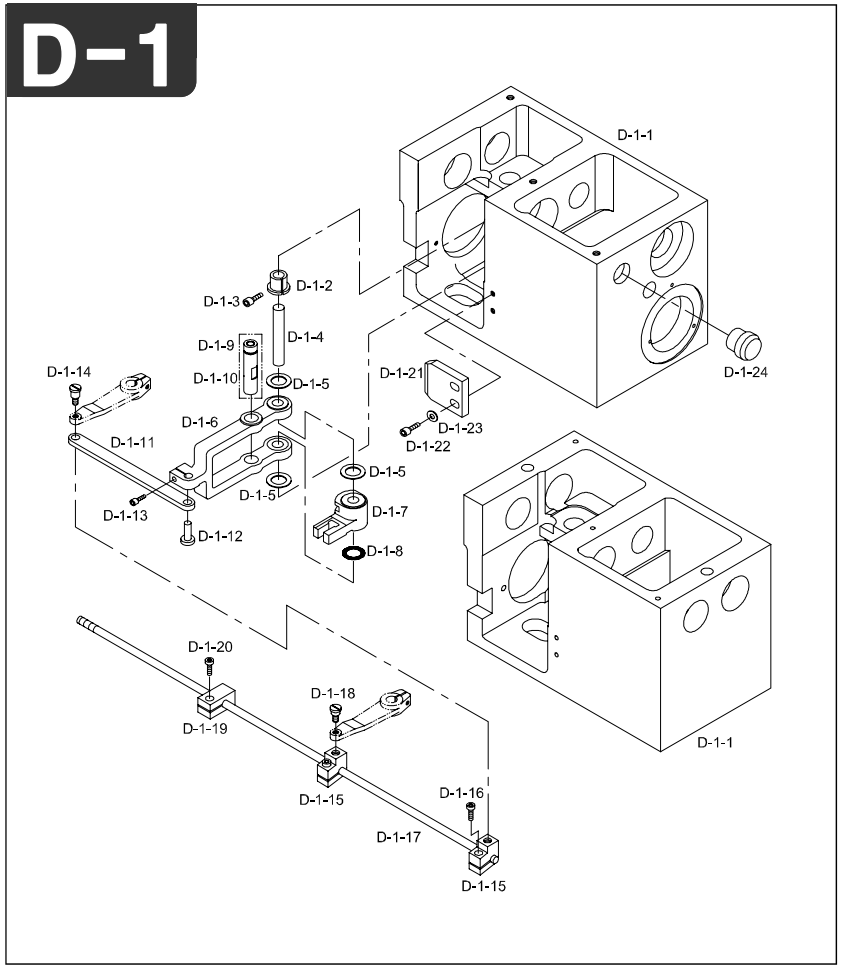

Note

Ref.No	Part No.	Part Name	Application date	Interchangeability	Hardware	Q'ty	Remarks
D-1-1	GP-011445-00	Mes Cam Driving Box (A)				1	
	GP-011444-00	Mes Cam Driving Box (B)				1	
D-1-2	08203000A000	Take-Up Lever Shaft Bush(L)				2	
D-1-3	02014SC-7113	Hex. Socket Bolt (M4*L5)			O	2	
D-1-4	07025CW-UK01	Lever Shaft (@8*L70)				2	
D-1-5	07024BR-UK01	Fiber Washer(R-Tw0815)				6	
D-1-6	07028CL-UK01	Mes Driving Lever				2	
D-1-7	07029CL-UK01	Mes Driving Crank				2	
D-1-8	08022RB-T121	O-Ring (@10)				2	
D-1-9	07030AF-UK01	Roller				2	
D-1-10	07026CW-UK01	Roller Shaft				2	
D-1-11	03000700TH00	Thread Lever Connect Link				2	
D-1-12	08034CW-UK01	Lever Connecting Pin				2	
D-1-13	04010MC-7113	Hex.Socket Bolt (M4*L10)			O	2	
D-1-14	08016CW-UK01	Link Stud Bolt				2	
D-1-15	08023CL-UK01	Mes Shaft Cramp				6	
D-1-16	02015SC-7113	Hex.Socket Bolt(M4*L10)			O	6	
D-1-17	GP-004934-00	Mes Driving Shaft "A" L=418 UH1504D				2	
	03700100UH60	Mes Driving Shaft "A" L=818 UH1506D					
	GP-004155-00	Mes Driving Shaft "A" L=1215.5 UH1208D					
	02000300UH60	Mes Driving Shaft "A" L=2015.5 UH1512D					
D-1-18	08019CW-UK01	Clamp Stud Bolt				4	
D-1-19	08023CW-A001	Mes Shaft Cramp				2	
D-1-20	02015SC-7113	Hex.Socket Bolt(M4*L10)			O	2	
D-1-21	08021PM-UK01	Lever Stopper				2	
D-1-22	02015SC-7113	Hex.Socket Bolt(M4*L10)			O	4	
	18015SW-3111	Washer (4@)			O	4	
D-1-24	08071RB-UK01	Thread Driver Box Rubber				2	

D

D-2

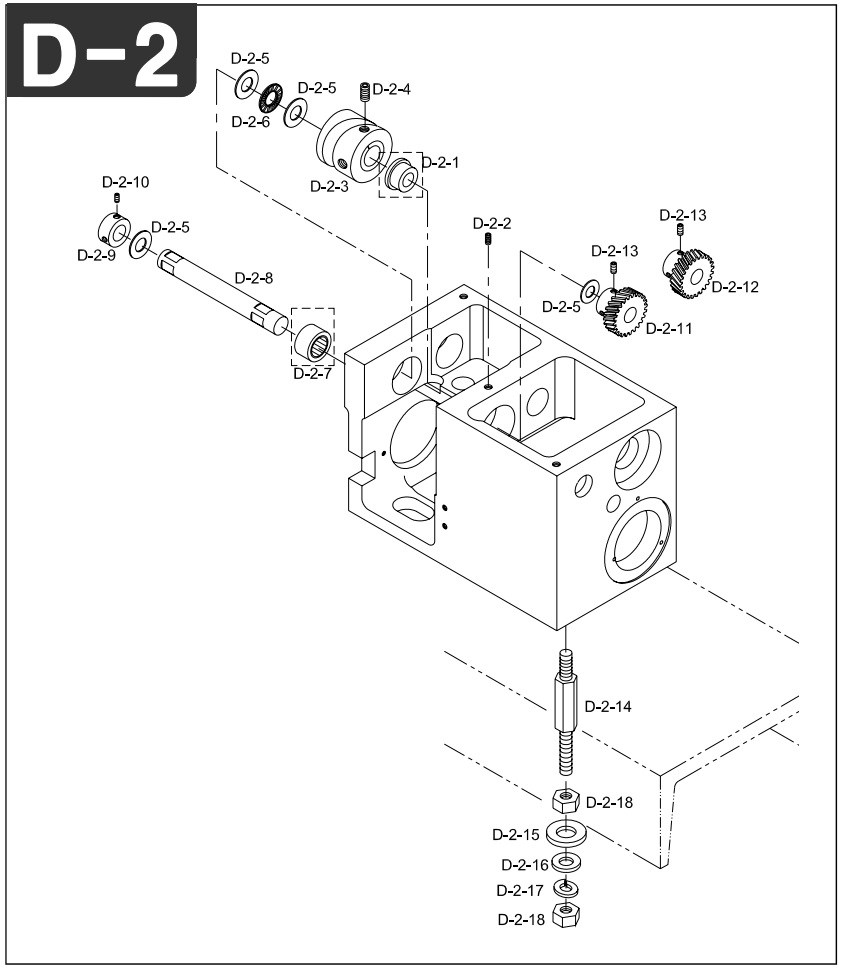

Note

Ref.No	Part No.	Part Name	Application date	Interchangeability	Hardware	Q'ty	Remarks
D-2-1	08042MP-UK01	Mes Cam Shaft Bush				2	
D-2-2	04014SC-4517	Hex. Socket Set Screw(M4*L5)			O	2	
D-2-3	07034CM-UK01	Mes Cam				2	
D-2-4	04016AF-A001	Cam Collar Screw				4	
D-2-5	08028BR-A001	Thrust Washer (As 1528)				8	
D-2-6	08027BR-A001	Thrust Bearing (Ntb 1528)				2	
D-2-7	04027BR-A001	Needle Bearing (Hmk1515)				2	
D-2-8	07038CW-UK01	Mes Cam Shaft				2	
D-2-9	03704900A000	Cam Shaft Collar				2	
D-2-10	04016AF-A001	Cam Collar Screw				8	
D-2-11	07041GA-UK01	Gear "A"				2	
D-2-12	07043GA-UK01	Gear "B"				2	
D-2-13	04012AF-A001	Hook Shaft Bush Screw				8	
D-2-14	08025CW-UK01	Box Stud Bolt				6	
D-2-15	04030SW-A001	Stud Bolt Washer(L) (@8)			O	6	
D-2-16	04029SW-A001	Stud Bolt Washer(S) (@8)			O	6	
D-2-17	15095SW-3115	Spring Washer (@8)			O	6	
D-2-18	04032SN-A001	Hex. Nut (M8-No2)			O	12	

D

D-3

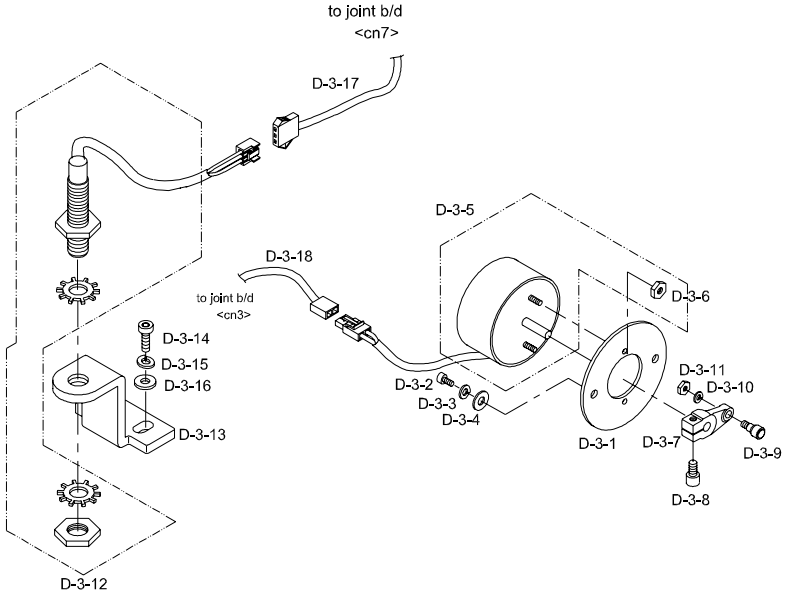

Note

Ref.No	Part No.	Part Name	Application date	Interchangeability	Hardware	Q'ty	Remarks
D-3-1	07015PR-UK01	Solenoid Plate				2	
D-3-2	02031SC-7113	Hex. Socket Screw(M5*L10)			O	4	
D-3-3	18048SW-3115	Spring Washer (5@)			O	4	
D-3-4	18049SW-3111	Washer (@5)			O	4	
D-3-5	08068EL-UH36	T/T SOLENOID (DUAL)				2	
D-3-6	11014SN-1211	Hex.Nut (M3-No2)			O	4	
D-3-7	07017CL-UK01	Solenoid Crank				2	
D-3-8	03071SC-7113	Hex. Socket Bolt (M3*L10)			O	2	
D-3-9	08048AF-T121	Solenoid Crank Roller				2	
D-3-10	18014SW-3115	Spring Washer (@4-No2)			O	2	
D-3-11	08050SN-T121	Hex. Nut			O	2	
D-3-12	08102EL-A001	Zero Point Sensor Ass'Y				2	
D-3-13	08070PR-UK01	Sensor Bracket				2	
D-3-14	02031SC-7113	Hex. Socket Screw(M5*L10)			O	4	
D-3-15	18014SW-3115	Spring Washer (@4-No2)			O	4	
D-3-16	18049SW-3111	Washer (@5)			O	4	
D-3-17	25039EL-UK06	Cable (25-39)				2	
D-3-18	25023EL-UK06	Cable (25-23)				2	

D

D-4

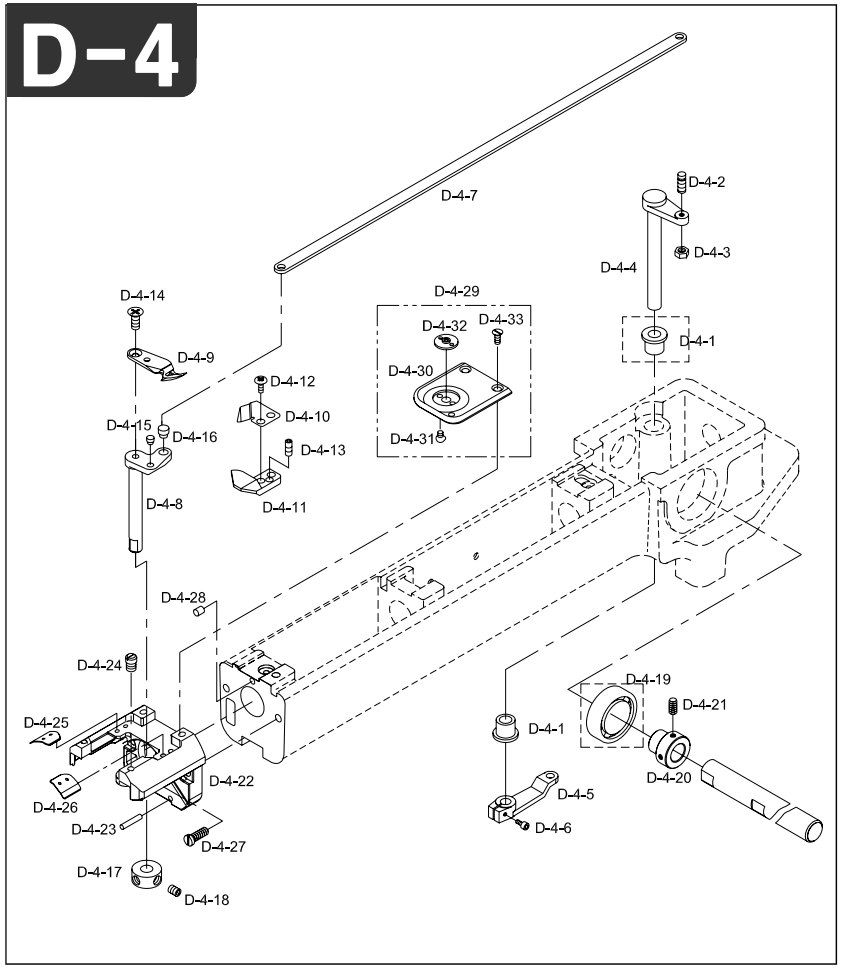

Note

Ref.No	Part No.	Part Name	Application date	Interchangeability	Hardware	Q'ty	Remarks
D-4-1	07021MP-T121	Lever Shaft Bush				12	
D-4-2	07023CW-T121	Lever Pin "A"				6	
D-4-3	02029SN-9311	Hex. Nut (M4-No2)			O	6	
D-4-4	03001100U000	Mes Driving Lever Shaft "A"				6	
D-4-5	02100400U000	Mes Driving Lever				6	
D-4-6	02015SC-7113	Hex.Socket Bolt(M4*L10)			O	6	
D-4-7	07006LA-UK01	Mes Connecting Link				6	
D-4-8	GP-006638-00	Moving Mes Shaft				6	
D-4-9	07028PR-T121	Moving Mes				6	
D-4-10	07032CL-T121	Fixed Mes				6	
D-4-11	07033PR-T121	Under Thread Presser				6	
D-4-12	07018SC-8118	Plus Screw (M3*L8)			O	12	
D-4-13	03050SC-4517	Hex. Socket Set Screw (M3*L3)			O	6	
D-4-14	08014SC-A001	Plus Screw (M3*L8)			O	6	
D-4-15	08122CW-A001	MES PIN				6	
D-4-16	08123CW-T121	MOVING MES CONNECTING LINK PIN				6	
D-4-17	13003000T000	Mes Shaft Collar				6	
D-4-18	03022SC-4517	Hex. Socket Set Screw(M4*L5)			O	12	
D-4-19	04026BR-A001	Ball Bearing 6003Z				6	
D-4-20	01102000B000	Bearing Bushing				6	
D-4-21	04016AF-A001	Cam Collar Screw			O	12	
D-4-22	GP-005357-00	Needle Plate Bracket	Nov,01,04 ~ Jun,12,05	X		6	
	GP-005357-01		Jun,13,05 ~ Dec,03,08	△		6	
	GP-005357-02		Dec,04,08 ~	△		6	
D-4-23	02009PI-T121	Spring Pin				12	
D-4-24	04026SC-T121	Needle Plate Pin				6	
D-4-25	GP-012800-00	Needle Plate Guide(L)				6	
D-4-26	GP-012801-00	Needle Plate Guide(R)				6	
D-4-27	04037SC-A001	Picker Bracket Screw(R)				12	
D-4-28	32047RB-T121	Oil Rubber Cap				6	
D-4-29	02019BM-T121	Needle Plate Set(Cap)				6	
D-4-30	02019PR-T121	Needle Plate(Cap)				6	
D-4-31	04007SC-A001	Cushion Cover Screw (M3*L2.3)				12	
D-4-32	GP-010385-00	NEEDLE GUIDE PLATE(FLAT)				6	
D-4-33	04004AF-A001	Needle Plate Screw				12	

D

D-5

(UH1208D,UH1512D)

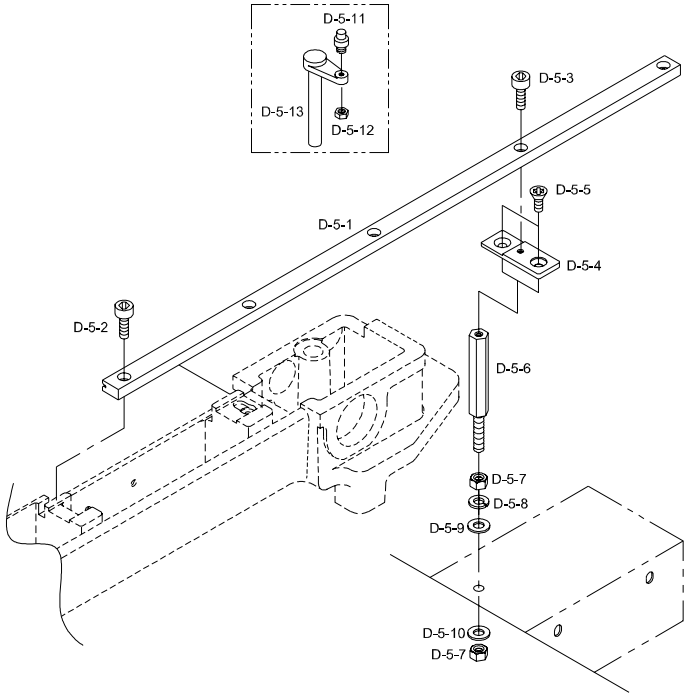

Note

Ref.No	Part No.	Part Name	Application date	Interchangeability	Hardware	Q'ty	Remarks
D-5-1	GP-004139-00	Rail Guide				2	
D-5-2	02015SC-7113	Hex.Socket Bolt(M4*L10)			O	6	
D-5-3	02023SC-7113	Hex. Socket Bolt (M4*L8)			O	4	
D-5-4	04053PR-UK01	Rail Support Plate				4	
D-5-5	06020MC-8119	PLUSS SCREW (M6*L20)			O	8	
D-5-6	16021CW-A001	Table Support Stud				8	
D-5-7	04032SN-A001	Hex. Nut (M8-No2)			O	16	
D-5-8	15095SW-3115	Spring Washer (@8)			O	8	
D-5-9	04029SW-A001	Stud Bolt Washer(S) (@8)			O	8	
D-5-10	04030SW-A001	Stud Bolt Washer(L) (@8)			O	8	
D-5-11	08122CW-UK01	Lever Pin "B"				2	
D-5-12	02029SN-9311	Hex. Nut (M4-No2)			O	8	
D-5-13	03001200U000	Mes Driving Lever Shaft "B"				2	

D

Main Drive System

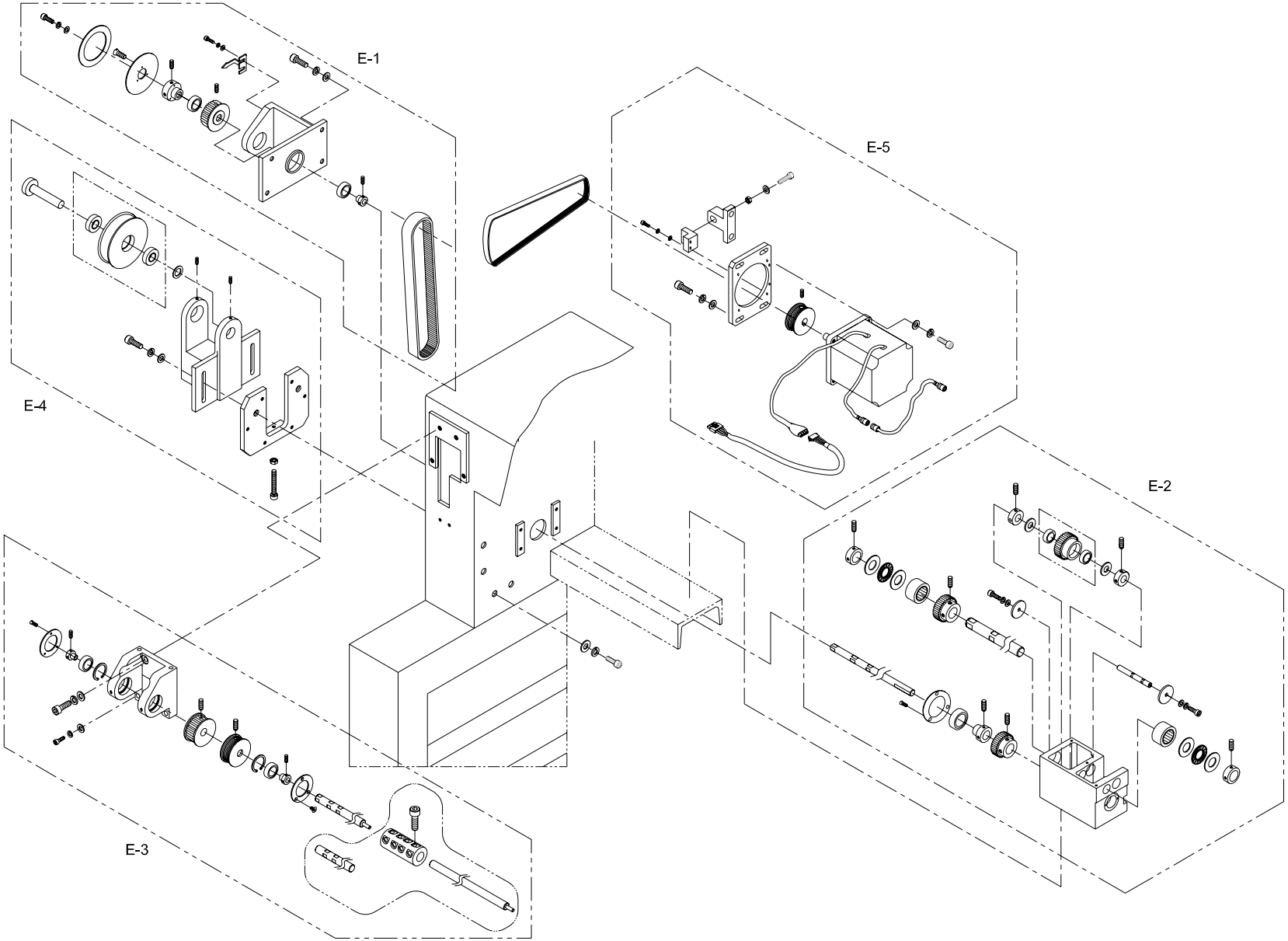

E-1

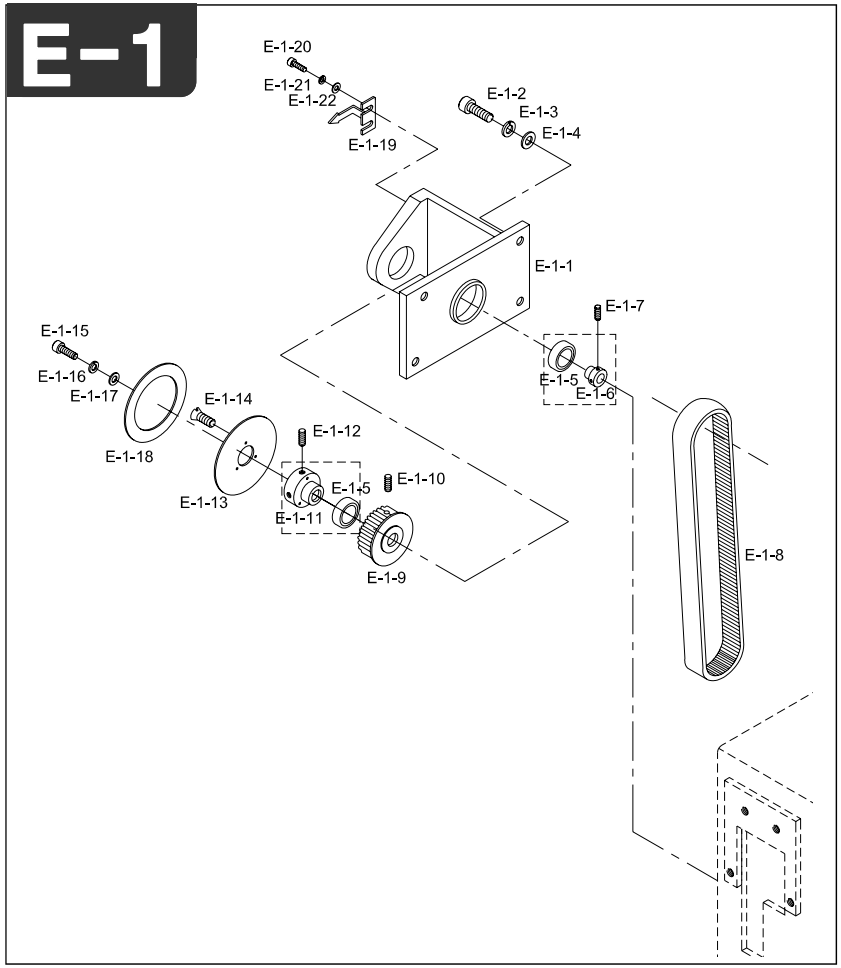

Note

Ref.No	Part No.	Part Name	Application date	Interchangeability	Hardware	Q'ty	Remarks
E-1-1	03012000U000	LOW SHAFT SUPPORT BRACKET(L)				1	
E-1-2	08091SC-7113	HEX. SOCKET BOLT (M6*L20)				4	
E-1-3	03026SW-9115	SPRING WASHER (@6)			O	4	
E-1-4	08057SW-1111	WASHER (@6)			O	4	
E-1-5	01029BR-A001	BALL BEARING 6004Z			O	2	
E-1-6	13107CW-UK01	COLLAR				1	
E-1-7	14060AF-4517	HEX.SOCKET SCREW(M6*L6)			O	2	
E-1-8	03000200U000	TIMING BELT (25-S5M*L1025)				1	
E-1-9	03000130U000	INDEX Timing PULLEY				1	
E-1-10	14061AF-4517	HEX.SOCKET SCREW(M8*L8)			O	4	
E-1-11	14058CW-A001	COLLAR "A"				1	
E-1-12	14060AF-4517	HEX.SOCKET SCREW(M6*L6)			O	2	
E-1-13	13053PR-UK01	ANGLE PLATE BASE				1	
E-1-14	13061SC-8119	PLUS SCREW (M3*L10)			O	3	
E-1-15	14006SC-7113	HEX.SOCKET SET SCREW(M8*L15)			O	1	
E-1-16	15095SW-3115	SPRING WAHSER(@8)			O	1	
E-1-17	04029SW-A001	STUD BOLT WASHER(S) (@8)			O	1	
E-1-18	13054ET-UK01	ANGLE DISK(L)				1	
E-1-19	03012200U000	INDICATOR				1	
E-1-20	02015SC-7113	HEX.SOCKET BOLT(M4*L8)			O	2	
E-1-21	18014SW-3115	SPRING WASHER (@4-NO2)			O	2	
E-1-22	18015SW-3111	WASHER (4@)			O	2	

E

E-2

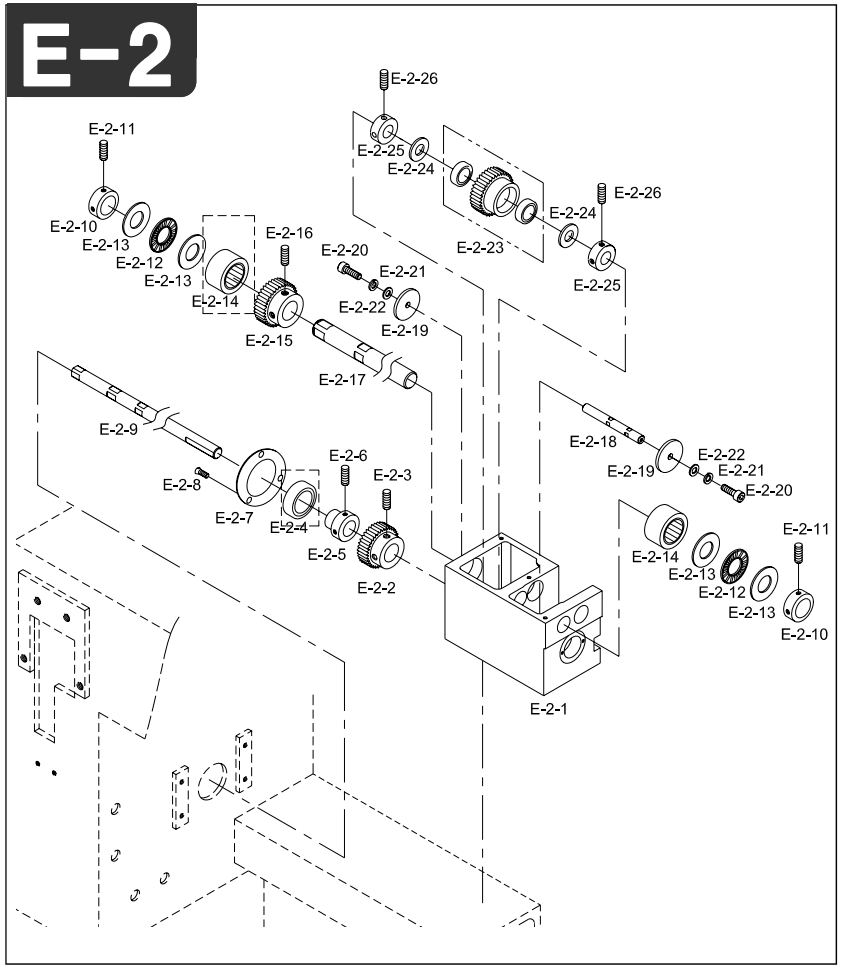

Note

Ref.No	Part No.	Part Name	Application date	Interchangeability	Hardware	Q'ty	Remarks
E-2-1	08023CS-UK01	Mes Cam Driving Box				1	
E-2-2	13032GA-UK06	INDEX SHAFT GEAR UK06				1	
E-2-3	04012AF-A001	HOOK SHAFT BUSH SCREW (15/64)			O	2	
E-2-4	04026BR-A001	BALL BEARING 6003Z			O	1	
E-2-5	01102000B000	COLLAR"B"				1	
E-2-6	04016AF-A001	CAM COLLAR SCREW			O	2	
E-2-7	04039PR-A001	BEARING COVER				1	
E-2-8	13061SC-8119	PLUS SCREW (M3*L10)			O	3	
E-2-9	03100600UH60	INDEX SHAFT A [428.5mm]				1	
E-2-10	03704900A000	CAM SHAFT COLLAR				2	
E-2-11	04016AF-A001	CAM COLLAR SCREW			O	4	
E-2-12	08027BR-A001	THRUST BEARING (NTB 1528)			O	2	
E-2-13	08028BR-A001	THRUST WASHER (AS 1528)				4	
E-2-14	04027BR-A001	NEEDLE BEARING (HMK1515)			O	1	
E-2-15	13032GA-UK06	INDEX SHAFT GEAR UK06				1	
E-2-16	04012AF-A001	HOOK SHAFT BUSH SCREW (15/64)			O	2	
E-2-17	GP-004941-00	LOW SHAFT A [704mm] UH1504D				1	
	03000310UH60	LOW SHAFT A [1104mm] UH1506D					
	GP-004153-00	LOW SHAFT A [1504mm] UH1208D					
	02000110UH60	LOW SHAFT A [1104mm] UH1512D					
E-2-18	13041SH-UK01	MIDDLE SHAFT				1	
E-2-19	08053PR-A001	LEVER WASHER				4	
E-2-20	02023SC-7113	HEX.SOCKET BOLT(M4*L8)			O	2	
E-2-21	18014SW-3115	SPRING WASHER (@4-NO2)			O	2	
E-2-22	18015SW-3111	WASHER (4@)			O	2	
E-2-23	13034GA-UK06	MIDDLE SHAFT GEAR UK06				1	
	13036BR-UK01	MIDDLE SHAFT GEAR NEEDLE BEARING				4	
E-2-24	12019BR-T121	FIBER WASHER R-TW1020				4	
E-2-25	13038CW-UK01	COLLAR				2	
E-2-26	03022SC-4517	HEX. SOCKET SET SCREW(M4*L5)			O	4	

E

E-3

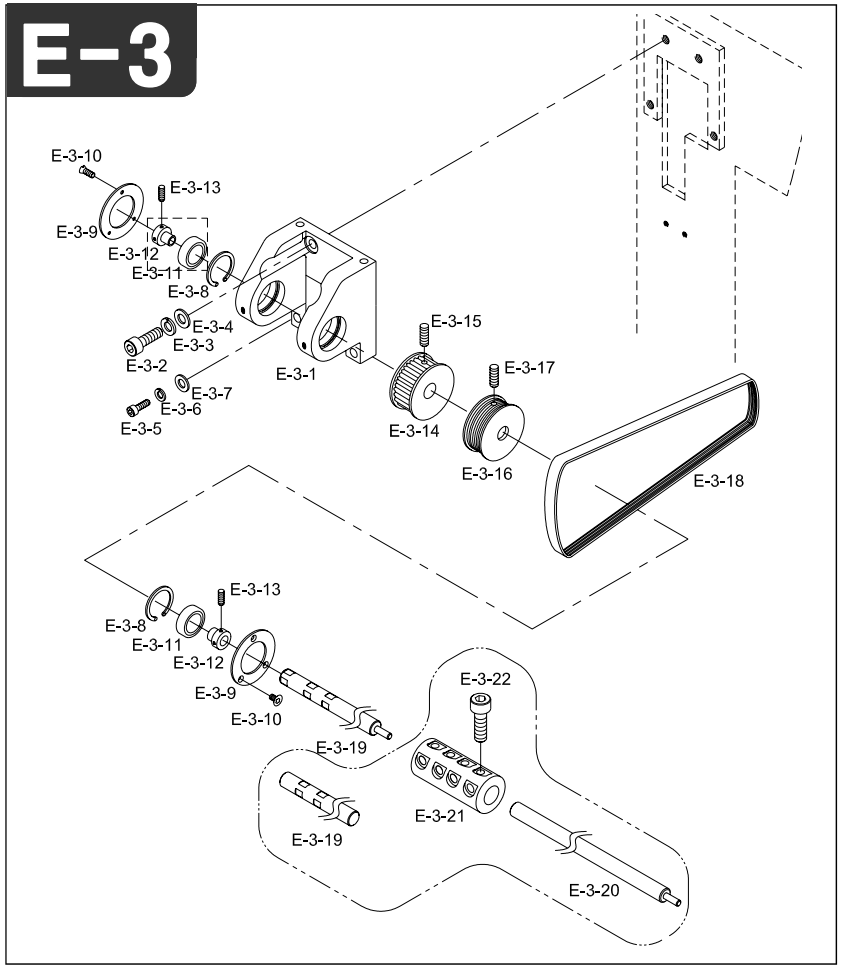

Note

Ref.No	Part No.	Part Name	Application date	Interchangeability	Hardware	Q'ty	Remarks
E-3-1	03101300UH80	UPPER SHAFT SUPPORT BRACKET(L)				1	
E-3-2	16009SC-4113	HEX.SOCKET BOLT(M10*L25)			O	2	
E-3-3	01008SW-9115	SPRING WASHER(@10)			O	2	
E-3-4	01007SW-1111	WASHER(@10)			O	2	
E-3-5	08091SC-7113	HEX. SOCKET BOLT (M6*L20)			O	2	
E-3-6	03026SW-9115	SPRING WASHER (@6)			O	2	
E-3-7	08057SW-1111	WASHER (@6)			O	2	
E-3-8	03010SR-4013	C-RING (@47)			O	2	
E-3-9	03101400U000	UPPER SHAFT SUPPORT COVER				2	
E-3-10	05007SC-7113	HEX. SOCKET BOLT (M3*L5)				2	
E-3-11	01001100H000	BALL BEARING(6005ZZ)				6	
E-3-12	03005210H000	COLLAR "A"			O	2	
E-3-13	14060AF-4517	HEX.SOCKET SCREW(M6*L6)			O	6	
E-3-14	03000120U000	TOP SHAFT Timing PULLEY				1	
E-3-15	14060AF-4517	HEX.SOCKET SCREW(M6*L6)			O	8	
E-3-16	03010800UH00	TOP SHAFT PULLEY				1	
E-3-17	14060AF-4517	HEX.SOCKET SCREW(M6*L6)			O	1	
E-3-18	03100700UH80	MAIN DRIVING BELT 200J				1	
E-3-19	GP-004935-00	TOP SHAFT A [1447.7mm] UH1504D				1	
	03000110UH60	TOP SHAFT A [1497.7mm] UH1506D				1	
	GP-004151-00	TOP SHAFT A [1897.5mm] UH1208D				1	
	GP-005072-00	TOP SHAFT A [1197.7mm] UH1512D				1	
E-3-20	GP-005075-00	TOP SHAFT C [1309mm] UH1512D				1	
E-3-21	03006720HDK0	Coupling @20				1	
E-3-22	08091SC-7113	Hex. Socket Bolt (M6*L20)			O	4	

E

E-4

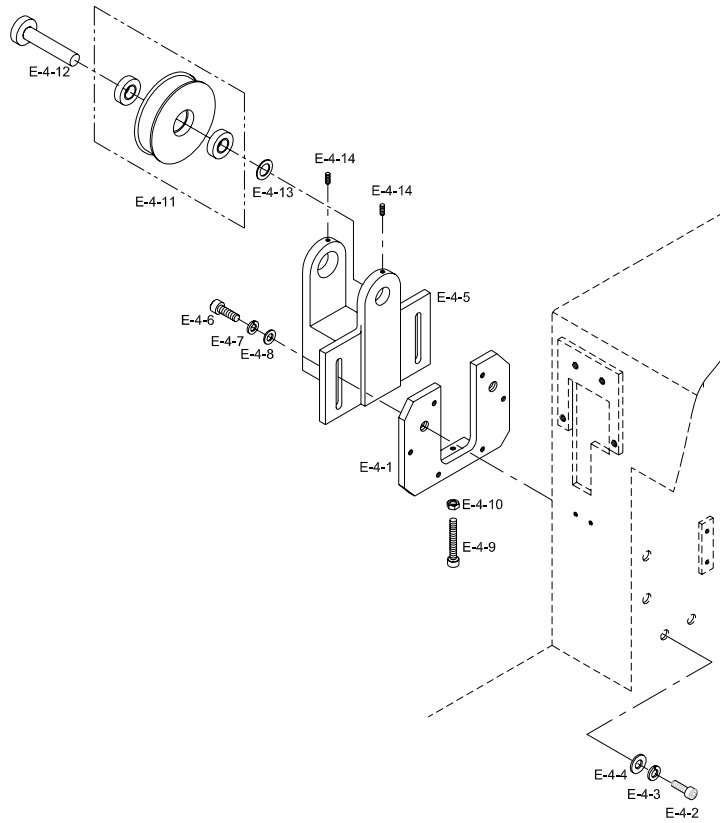

Note

Ref.No	Part No.	Part Name	Application date	Interchangeability	Hardware	Q'ty	Remarks
E-4-1	13123CW-E121	IDELR PLATE				1	
E-4-2	08091SC-7113	HEX. SOCKET BOLT (M6*L20)			O	6	
E-4-3	03026SW-9115	SPRING WASHER (@6)			O	6	
E-4-4	08057SW-1111	WASHER (@6)			O	6	
E-4-5	13118CS-UK01	IDLER SUPPORT BRACKET				1	
E-4-6	14027SC-4113	HEX.SOCKET BOLT (M8*L30)			O	2	
E-4-7	15095SW-3115	SPRING WASHER(@8)			O	2	
E-4-8	04029SW-A001	STUD BOLT WASHER(S) (@8)			O	2	
E-4-9	14063SC-A001	TENSION CONTROL BOLT (M6*L40)			O	1	
E-4-10	13042SN-1111	HEX.NUT (M6*T5-R)			O	1	
E-4-11	03000300U000	IDLER				1	
	13026BR-T121	NEEDLE BEARING (6002Z)			O	2	
E-4-12	13120CW-UK01	IDLER SHAFT				1	
E-4-13	13106PR-UK01	IDLER SPACER				1	
E-4-14	14060AF-4517	HEX.SOCKET SCREW(M6*L6)			O	2	

E

E-5

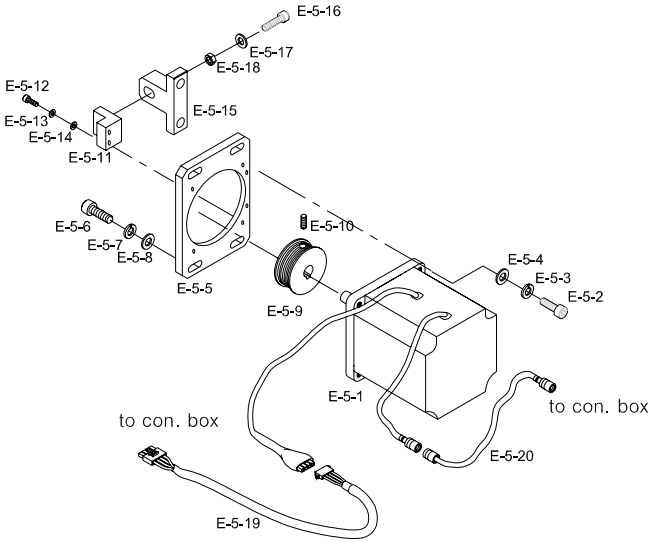

Note

Ref.No	Part No.	Part Name	Application date	Interchangeability	Hardware	Q'ty	Remarks
E-5-1	SFAM-600-300	MAIN MOTOR				1	
E-5-2	15030SC-7113	HEX. SOCKET BOLT (M5*L30)			O	4	
E-5-3	18048SW-3115	SPRING WASHER (5@)			O	4	
E-5-4	18049SW-3111	WASHER (@5)			O	4	
E-5-5	GP-012897-00	MOTOR FIXING				1	
E-5-6	14046SC-7113	HEX.SOCKET BOLT (M6*L30)			O	4	
E-5-7	03026SW-9115	SPRING WASHER (@6)			O	4	
E-5-8	08057SW-1111	WASHER (@6)			O	4	
E-5-9	03010800UH80	MAIN MOTOR PULLEY				1	
E-5-10	04014SC-4517	HEX.SOCKET SET SCREW(M5*L5)			O	2	
E-5-11	03000900U000	TENSION ADJUSTING BLOCK				1	
E-5-12	08062SC-7113	HEX. SOCKET BOLT (M5*L20)			O	2	
E-5-13	18048SW-3115	SPRING WASHER (5@)			O	2	
E-5-14	18049SW-3111	WASHER (@5)			O	2	
E-5-15	03000900U060	TENSION ADJUSTING BLOCK				1	
E-5-16	14063SC-A001	Tension Control Bolt (M6*L40)			O	1	
E-5-17	08057SW-1111	Washer (@6)			O	1	
E-5-18	08058SN-1311	Hex. Nut (M6-No3)			O	1	
E-5-19	02106500UH80	Sh-65-5				1	
E-5-20	CA-002986-00	Encoder Cable UH1202D				1	
	CA-002982-00	Encoder Cable UH1204D				1	
	CA-002984-00	Encoder Cable UH1206D				1	
	CA-002987-00	Encoder Cable UH1208D				1	

E

Main Drive System 1

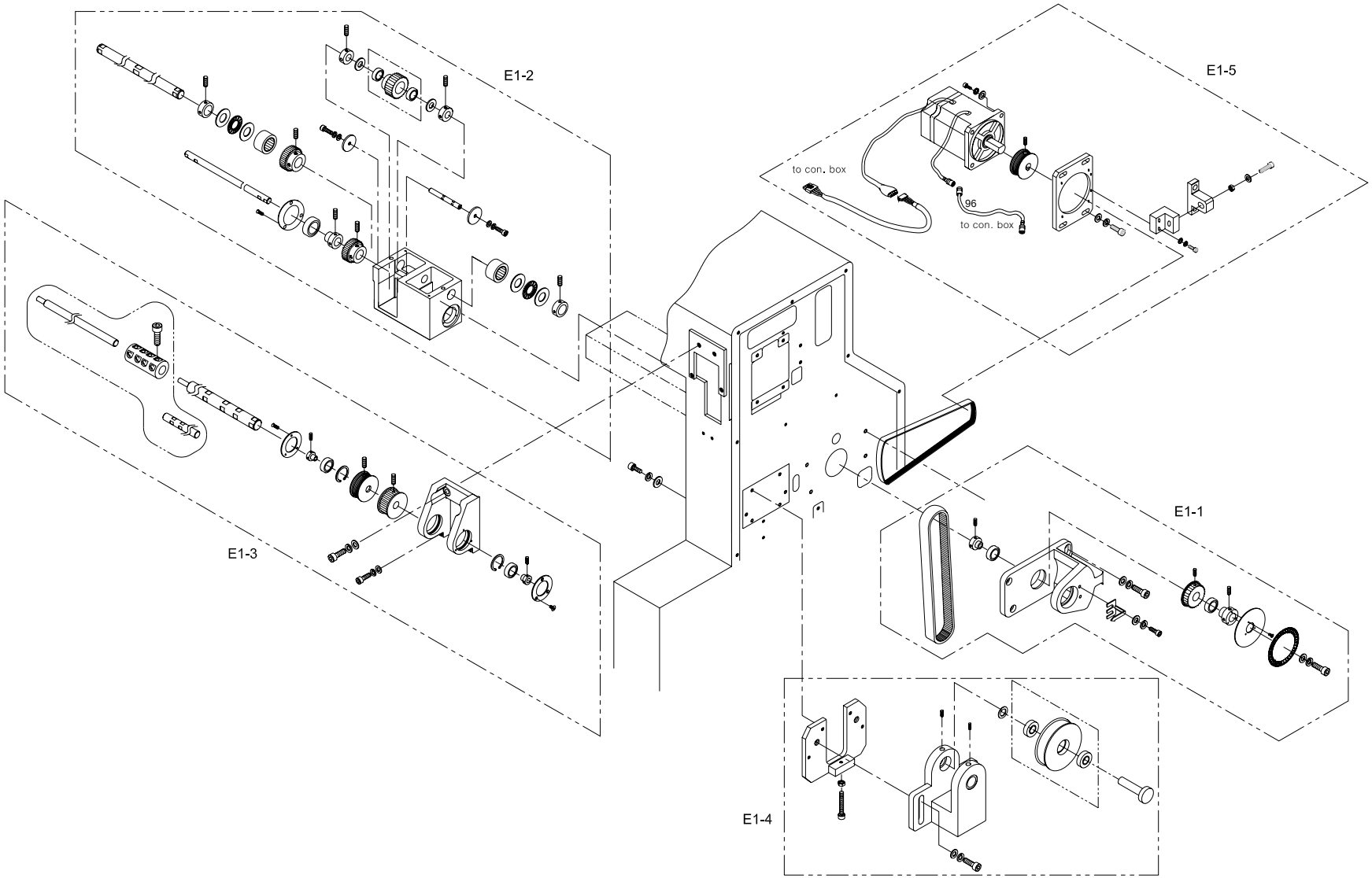

E1-1

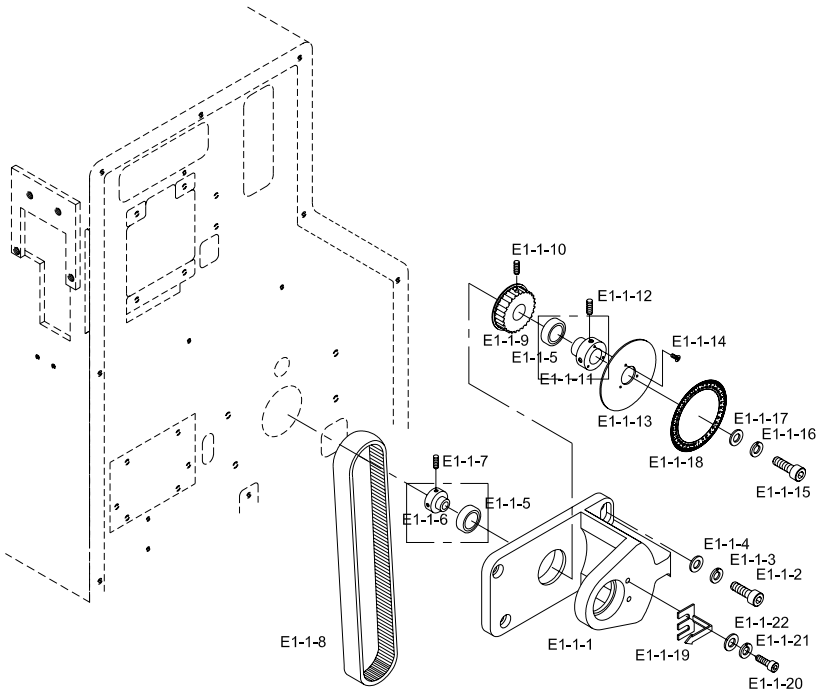

Note

Ref.No	Part No.	Part Name	Application date	Interchangeability	Hardware	Q'ty	Remarks
E1-1-1	03012000UH60	LOW SHAFT SUPPORT BRACKET (R)				1	
E1-1-2	08091SC-7113	HEX. SOCKET BOLT (M6*L20)			O	4	
E1-1-3	03026SW-9115	SPRING WASHER (@6)			O	4	
E1-1-4	08057SW-1111	WASHER (@6)			O	4	
E1-1-5	01029BR-A001	BALL BEARING 6004Z			O	2	
E1-1-6	13107CW-UK01	COLLAR				1	
E1-1-7	14060AF-4517	HEX.SOCKET SCREW(M6*L6)			O	2	
E1-1-8	03000200U000	TIMING BELT (25-S5M*L1025)				1	
E1-1-9	03000130U000	INDEX Timing PULLEY				1	
E1-1-10	14061AF-4517	HEX.SOCKET SCREW(M8*L8)			O	4	
E1-1-11	14058CW-A001	COLLAR "A"				1	
E1-1-12	14060AF-4517	HEX.SOCKET SCREW(M6*L6)			O	2	
E1-1-13	13053PR-UK01	ANGLE PLATE BASE				1	
E1-1-14	13061SC-8119	PLUS SCREW (M3*L10)			O	3	
E1-1-15	14006SC-7113	HEX.SOCKET SET SCREW(M8*L15)			O	1	
E1-1-16	15095SW-3115	SPRING WAHSER(@8)			O	1	
E1-1-17	04029SW-A001	STUD BOLT WASHER(S) (@8)			O	1	
E1-1-18	03100100U000	ANGLE DISK (R)				1	
E1-1-19	03012200U000	INDICATOR				1	
E1-1-20	02015SC-7113	HEX.SOCKET BOLT(M4*L8)			O	2	
E1-1-21	18014SW-3115	SPRING WASHER (@4-NO2)			O	2	
E1-1-22	18015SW-3111	WASHER (4@)			O	2	

E

E1-2

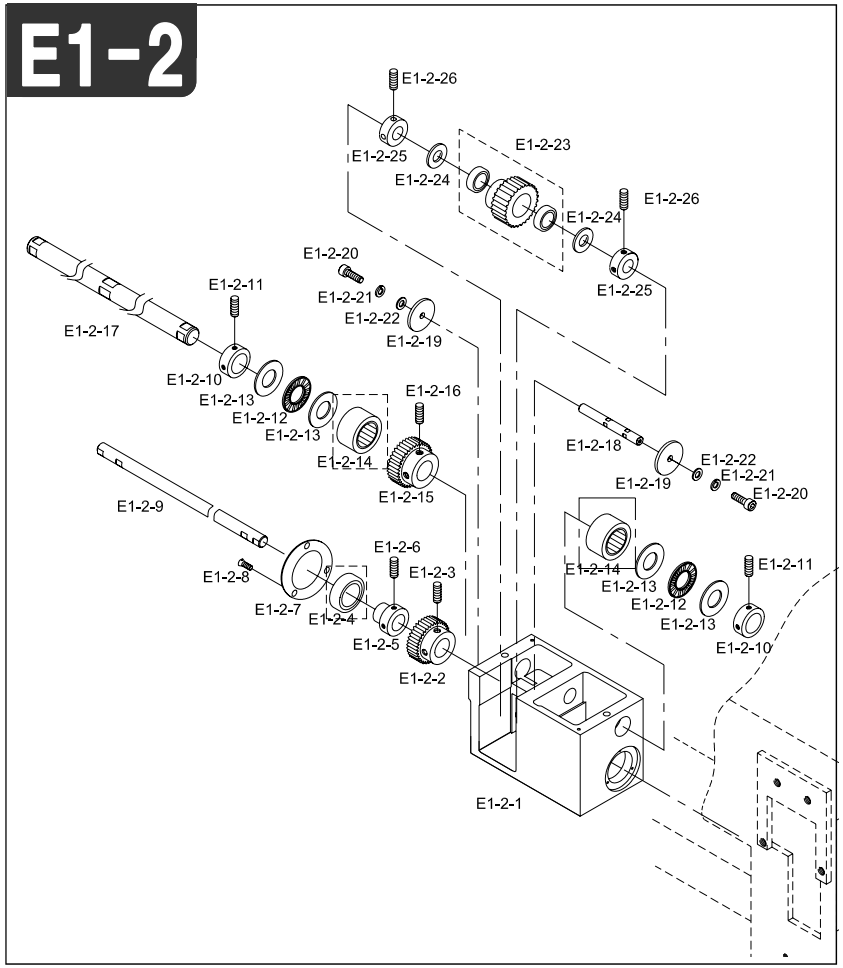

Note

Ref.No	Part No.	Part Name	Application date	Interchangeability	Hardware	Q'ty	Remarks
E1-2-1	03700300UH60	Mes Cam Driving Box C				1	
E1-2-2	13032GA-UK06	INDEX SHAFT GEAR UK06				1	
E1-2-3	04012AF-A001	HOOK SHAFT BUSH SCREW (15/64)			O	2	
E1-2-4	04026BR-A001	BALL BEARING 6003Z			O	1	
E1-2-5	01102000B000	COLLAR"B"				1	
E1-2-6	14060AF-4517	HEX.SOCKET SCREW(M6*L6)			O	2	
E1-2-7	04039PR-A001	BEARING COVER				1	
E1-2-8	13061SC-8119	PLUS SCREW (M3*L10)			O	3	
E1-2-9	03100710UH60	INDEX SHAFT B[551mm]				1	
E1-2-10	03704900A000	CAM SHAFT COLLAR				2	
E1-2-11	04016AF-A001	CAM COLLAR SCREW				4	
E1-2-12	08027BR-A001	THRUST BEARING (NTB 1528)			O	2	
E1-2-13	08028BR-A001	THRUST WASHER (AS 1528)				4	
E1-2-14	04027BR-A001	NEEDLE BEARING (HMK1515)			O	1	
E1-2-15	13032GA-UK06	INDEX SHAFT GEAR UK06				1	
E1-2-16	04012AF-A001	HOOK SHAFT BUSH SCREW (15/64)			O	2	
E1-2-17	GP-004942-00	LOW SHAFT B [902.5mm] UH1504D				1	
	03000410UH60	LOW SHAFT B [1302.5mm] UH1506D					
	GP-004154-00	LOW SHAFT B [1702.5mm] UH1208D					
	GP-005077-00	LOW SHAFT B [1302.5mm] UH1512D					
E1-2-18	13041SH-UK01	MIDDLE SHAFT				1	
E1-2-19	08053PR-A001	LEVER WASHER				4	
E1-2-20	02023SC-7113	HEX.SOCKET BOLT(M4*L8)			O	2	
E1-2-21	18014SW-3115	SPRING WASHER (@4-NO2)			O	2	
E1-2-22	18015SW-3111	WASHER (4@)			O	2	
E1-2-23	13034GA-UK06	MIDDLE SHAFT GEAR UK06				1	
	13036BR-UK01	MIDDLE SHAFT GEAR NEEDLE BEARING (@10-@19)NNB				4	
E1-2-24	12019BR-T121	FIBER WASHER R-TW1020			O	4	
E1-2-25	13038CW-UK01	COLLAR				2	
E1-2-26	03022SC-4517	HEX. SOCKET SET SCREW(M4*L5)				4	

E

E1-3

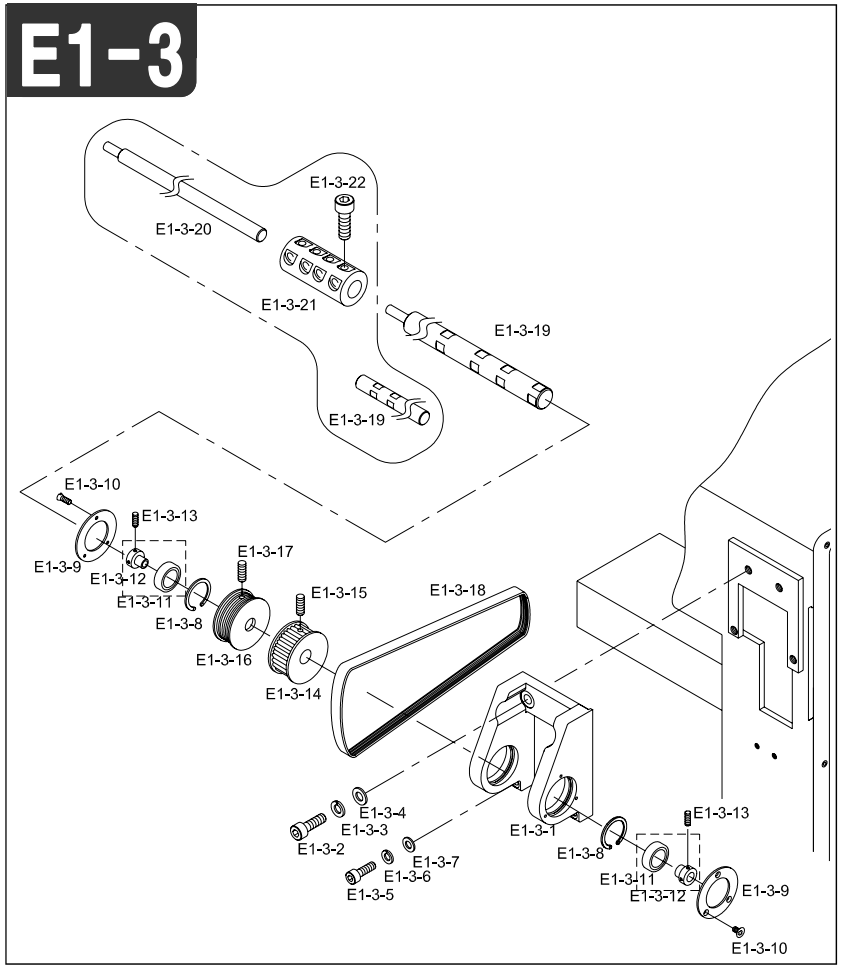

Note

Ref.No	Part No.	Part Name	Application date	Interchangeability	Hardware	Q'ty	Remarks
E1-3-1	03101400UH80	UPPER SHAFT SUPPORT BRACKET (R)				1	
E1-3-2	16009SC-4113	HEX.SOCKET BOLT(M10*L25)			O	2	
E1-3-3	01008SW-9115	SPRING WASHER(@10)			O	2	
E1-3-4	01007SW-1111	WASHER(@10)			O	2	
E1-3-5	08091SC-7113	HEX. SOCKET BOLT (M6*L20)			O	2	
E1-3-6	03026SW-9115	SPRING WASHER (@6)			O	2	
E1-3-7	08057SW-1111	WASHER (@6)			O	2	
E1-3-8	03010SR-4013	C-RING (@47)				2	
E1-3-9	03101400U000	UPPER SHAFT SUPPORT COVER				2	
E1-3-10	05007SC-7113	HEX. SOCKET BOLT (M3*L5)			O	6	
E1-3-11	01001100H000	BALL BEARING(6005ZZ)			O	2	
E1-3-12	03005210H000	COLLAR "A"				2	
E1-3-13	14060AF-4517	HEX.SOCKET SCREW(M6*L6)			O	2	
E1-3-14	03000120U000	TOP SHAFT Timing PULLEY				1	
E1-3-15	14060AF-4517	HEX.SOCKET SCREW(M6*L6)			O	4	
E1-3-16	03010800UH00	TOP SHAFT PULLEY				1	
E1-3-17	14060AF-4517	HEX.SOCKET SCREW(M6*L6)			O	4	
E1-3-18	03100700UH80	MAIN DRIVING BELT 200J				1	
E1-3-19	GP-004936-00	TOP SHAFT B [1259.2mm] UH1504D				1	
	03000210UH60	TOP SHAFT B [1610mm] UH1506D					
	GP-004152-00	TOP SHAFT B [2009.2mm] UH1208D					
	GP-005074-00	TOP SHAFT B [1500mm] UH1512D					
E1-3-20	GP-005075-00	TOP SHAFT C [1309mm] UH1512D				1	
E1-3-21	03006720HDK0	Coupling @20 UH1512D				1	
E1-3-22	08091SC-7113	Hex. Socket Bolt (M6*L20) UH1512D			O	4	

E

E1-4

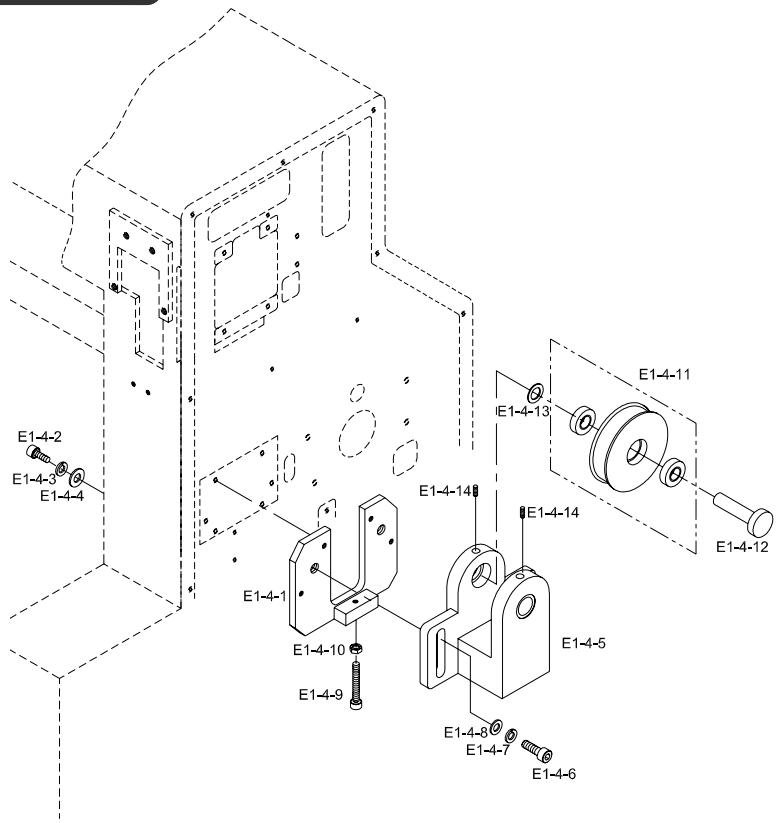

Note

Ref.No	Part No.	Part Name	Application date	Interchangeability	Hardware	Q'ty	Remarks
E1-4-1	13123CW-E121	IDELR PLATE				1	
E1-4-2	08091SC-7113	HEX. SOCKET BOLT (M6*L20)			O	6	
E1-4-3	03026SW-9115	SPRING WASHER (@6)			O	6	
E1-4-4	08057SW-1111	WASHER (@6)			O	6	
E1-4-5	13118CS-UK01	IDLER SUPPORT BRACKET				1	
E1-4-6	14027SC-4113	HEX.SOCKET BOLT (M8*L30)			O	2	
E1-4-7	15095SW-3115	SPRING WASHER(@8)			O	2	
E1-4-8	04029SW-A001	STUD BOLT WASHER(S) (@8)			O	2	
E1-4-9	14063SC-A001	TENSION CONTROL BOLT (M6*L40)			O	1	
E1-4-10	13042SN-1111	HEX.NUT (M6*T5-R)			O	1	
E1-4-11	03000300U000	IDLER				1	
	13026BR-T121	NEEDLE BEARING (6002Z)			O	2	
E1-4-12	13120CW-UK01	IDLER SHAFT				1	
E1-4-13	13106PR-UK01	IDLER SPACER				1	
E1-4-14	14060AF-4517	HEX.SOCKET SCREW(M6*L6)			O	2	

E

E1-5

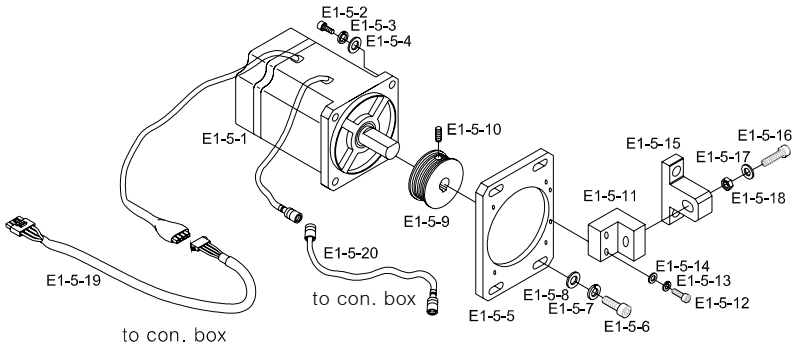

Note

Ref.No	Part No.	Part Name	Application date	Interchangeability	Hardware	Q'ty	Remarks
E1-5-1	SFAM-600-300	MAIN MOTOR				1	
E1-5-2	15030SC-7113	HEX. SOCKET BOLT (M5*L30)			O	4	
E1-5-3	18048SW-3115	SPRING WASHER (5@)			O	4	
E1-5-4	18049SW-3111	WASHER (@5)			O	4	
E1-5-5	GP-012897-00	MOTOR FIXING				1	
E1-5-6	14046SC-7113	HEX.SOCKET BOLT (M6*L30)			O	4	
E1-5-7	03026SW-9115	SPRING WASHER (@6)			O	4	
E1-5-8	08057SW-1111	WASHER (@6)			O	4	
E1-5-9	03010800UH80	MAIN MOTOR PULLEY				1	
E1-5-10	04014SC-4517	HEX.SOCKET SET SCREW(M5*L5)			O	2	
E1-5-11	03000900U000	TENSION ADJUSTING BLOCK				1	
E1-5-12	08062SC-7113	HEX. SOCKET BOLT (M5*L20)			O	2	
E1-5-13	18048SW-3115	SPRING WASHER (5@)			O	2	
E1-5-14	18049SW-3111	WASHER (@5)			O	2	
E1-5-15	03000900U060	TENSION ADJUSTING BLOCK				1	
E1-5-16	14063SC-A001	Tension Control Bolt (M6*L40)			O	1	
E1-5-17	08057SW-1111	Washer (@6)			O	1	
E1-5-18	08058SN-1311	Hex. Nut (M6-No3)			O	1	
E1-5-19	CA-002983-00	Encoder Cable UH1202D				1	
	CA-002983-00	Encoder Cable UH1204D				1	
	CA-002985-00	Encoder Cable UH1206D				1	
	CA-002988-00	Encoder Cable UH1208D				1	
E1-5-20	02106400UH80	CABLE (Sh-64-5)				1	

E

Head & Color Change

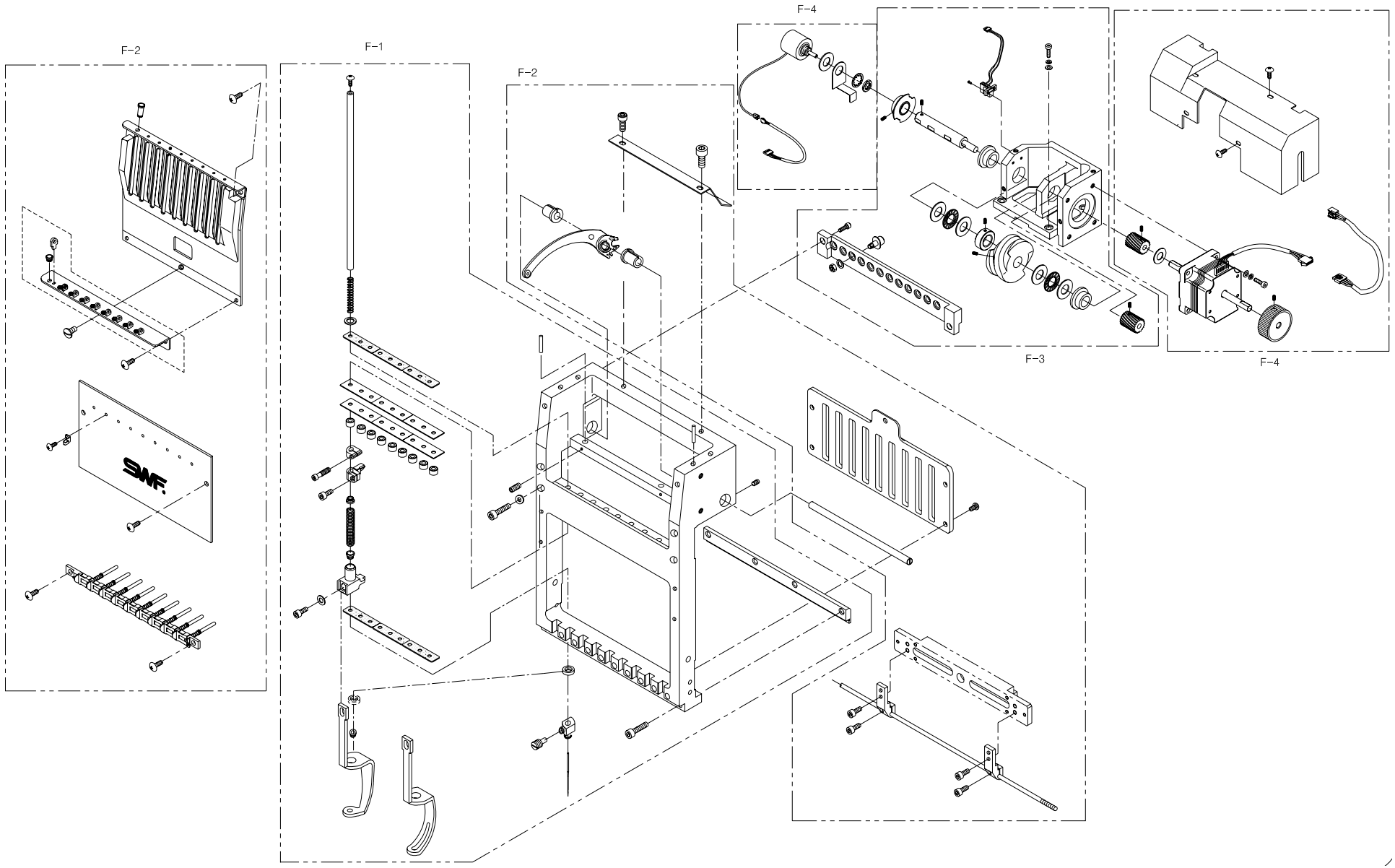

F-1

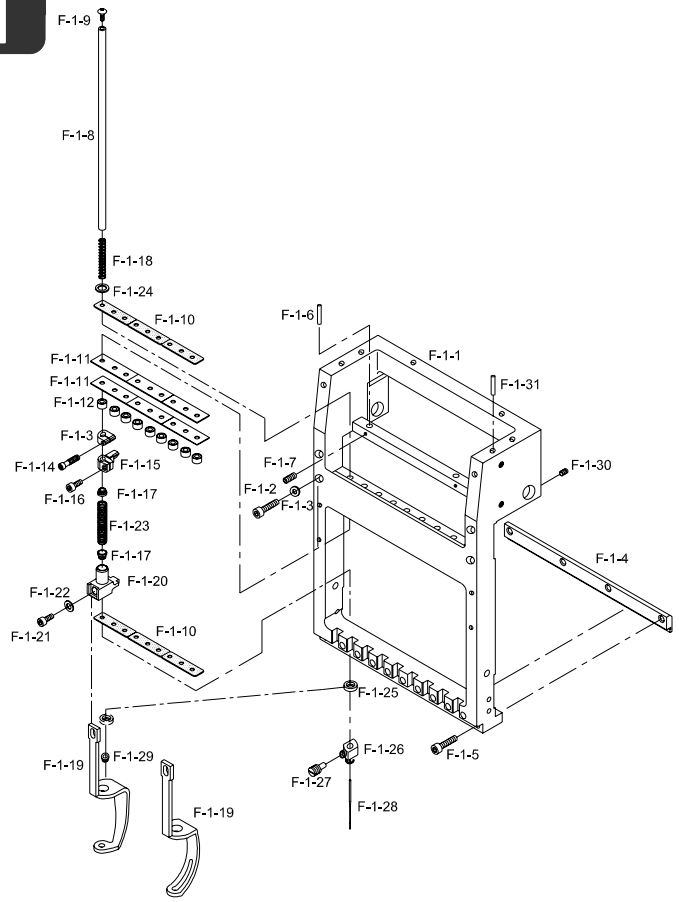

Note

Ref.No	Part No.	Part Name	Application date	Interchangeability	Hardware	Q'ty	Remarks
F-1-1	GP-007360-00	Head (9C)	Jan,28,05 ~ Nov,12,06	X		6	
	GP-007360-01		Nov,13,06 ~ Mar,25,07	△			
	GP-007360-02		Mar,26,07 ~ Dec,13,07	△			
	GP-007360-03		Dec,14,07 ~	△			
	GP-007361-00	Head (12C)	Jan,28,05 ~ Nov,12,06	X			
	GP-007361-01		Nov,13,06 ~ Mar,25,07	△			
	GP-007361-02		Mar,26,07 ~ Dec,13,07	△			
	GP-007361-03		Dec,14,07 ~	△			
	GP-007362-00	Head (15C)	Jan,28,05 ~ Nov,12,06	X			
	GP-007362-01		Nov,13,06 ~ Mar,25,07	△			
	GP-007362-02		Mar,26,07 ~ Dec,13,07	△			
	GP-007362-03		Dec,14,07 ~	△			
F-1-2	05008SC-4113	Hex.Socket Bolt (M4*L16)			O	24	
F-1-3	06003SW-2111	Washer (@4)			O	24	
F-1-4	08201303I000	Head Rail 9C				6	
F-1-5	04023MC-4113	Hex. Socket Bolt (M4*L23)			O	24	
F-1-6	05015CW-A001	Head Base Pin(@5*L15)				12	
F-1-7	03022SC-4517	Hex. Socket Set Screw(M4*L5)			O	12	
F-1-8	05018CW-A001	Needle Bar				54	
F-1-9	05019SC-A001	Needle Bar Cover Screw (M5*L6)			O	54	
F-1-10	08200700H000	Needle Bar Felt				36	
F-1-11	05023RB-A001	Needle Bar Cushion Rubber "A"				36	
F-1-12	05024RB-A001	Needle Bar Cushion Rubber "B"				54	
F-1-13	11101200T000	Upper Dead Point Stopper				54	
F-1-14	05026SC-4113	Stopper Screw (9/64-11.5)			O	54	
F-1-15	08201400H000	Needle Bar Holder				54	
F-1-16	05028SC-4113	Holder Screw (9/64-L8)			O	54	
F-1-17	05021PM-H001	Presser Foot Spring Guide				108	
F-1-18	08201000I000	Needle Bar Return Spring				54	
F-1-19	08200500I000	PRESSER FOOT				54	
	GP-006119-00	PRESSER FOOT (L)					
F-1-20	08200900I000	Presser Foot Holder A'ssy				54	
F-1-21	05026SC-H001	Presser Foot Bolt				54	
F-1-22	05027PR-H001	PRESSER FOOT HOLDER WASHER				54	
F-1-23	GP-007216-00	Needle Bar Return Spring	Jan,28,05 ~ Nov,12,06	X		54	
	GP-007216-01		Nov,13,06 ~	△			
F-1-24	05022SW-A001	Spring Shoe Washer				54	
F-1-25	08201200H000	Presser Foot Cushion Rubber A				54	

F

F-1

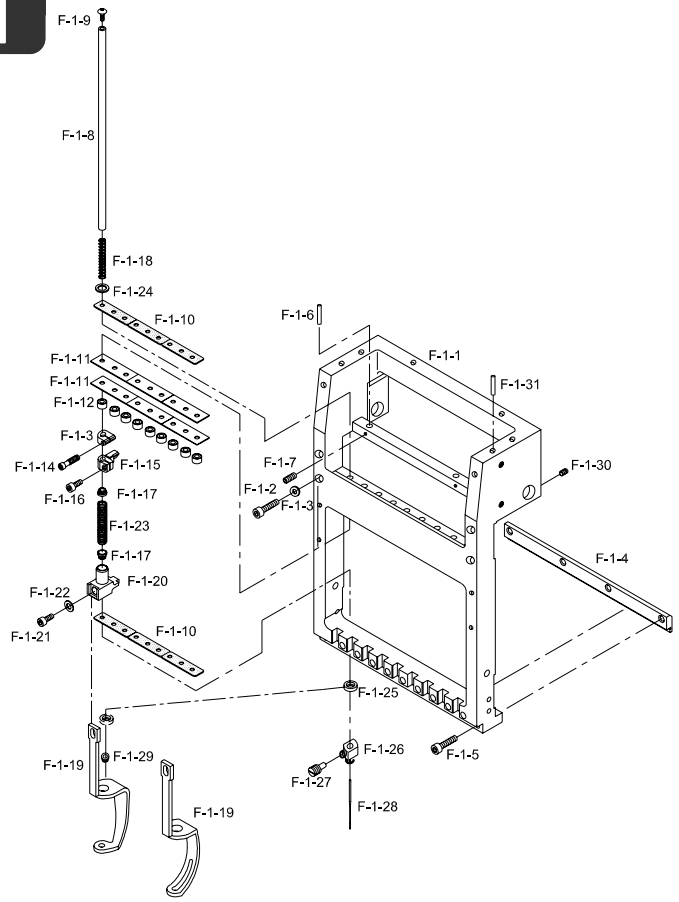

Note

Ref.No	Part No.	Part Name		Application date	Interchangeability	Hardware	Q'ty	Remarks
F-1-26	08201600H000	NEEDLE FIXED HOLDER					54	
F-1-27	05363SC-A001	Needle Fixed Screw (A/S)					54	
F-1-28	05037DB-A001	Needle (Db-K5- #11)				O	54	
F-1-29	05031AF-A001	PRESSER FOOT GUIDE BUSH					90	
F-1-30	07009SC-4517	Hex. Socket Bolt(M5*L6)				O	12	
F-1-31	01303700H000	TENSION PLATE PIN					12	
F-1-32	08200002I000	Head Assy	6c				6	
	08200003I000		9c					
	08200004I000		12c					

F

F-2

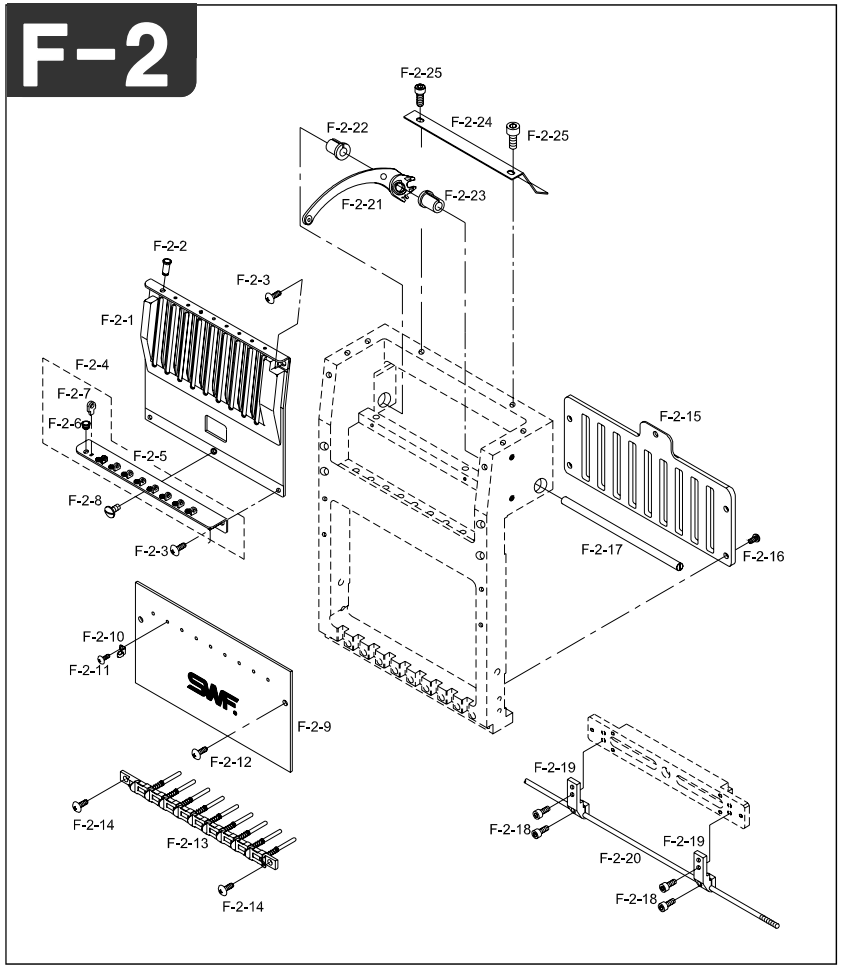

Note

Ref.No	Part No.	Part Name	Application date	Interchangeability	Hardware	Q'ty	Remarks
F-2-1	10200103B000	Head Face Plate (U) 9C				6	
F-2-2	10200100H000	Thread Guide Bush "A-1"				54	
F-2-3	05070SC-3123	Head Face Plate (U) Screw			O	24	
F-2-4	10300003A000	Thread Guide (M) Set (9C)				6	
	10300004A000	Thread Guide (M) Set (12C)					
	10300005A000	Thread Guide (M) Set (15C)					
F-2-5	GP-033547-00	Thread Guide (M)				6	
	GP-033548-00	Thread Guide (M) (12C)					
	GP-033549-00	Thread Guide (M) (15C)					
F-2-6	05452CM-A001	Eyelet "A"				54	
F-2-7	05483CM-A001	Eyelet "B" (9C)				36	
	10110000A000	Eyelet "B" (12C)				54	
	05483CM-A001	Eyelet "B"				72	
F-2-8	05062SC-A001	Thread Guide (M) Screw (9/64 n=40)				6	
F-2-9	12001703I000	Head Face Plate(L) (9C)				6	
	12001704I000	Head Face Plate(L) (12C)					
F-2-10	11012PR-B001	Thread Guide				54	
F-2-11	09005SC-3123	Truss Bolt (M3*L5)			O	54	
F-2-12	05070SC-3123	Head Face Plate (U) Screw			O	12	
F-2-13	10900003I000	Thread Holding Device A'ssy				6	
F-2-14	05070SC-3123	Truss Bolt 9/64 n=40			O	12	
F-2-15	GP-008540-00	Needle Bar Guide Rail (9C)				6	
	GP-008541-00	Needle Bar Guide Rail (12C)					
	GP-008542-00	Needle Bar Guide Rail (15C)					
F-2-16	05041SC-A001	Bolt (9/64 n=40)				30	
F-2-17	08200503A000	Take-Up Lever Shaft (9C)				6	
F-2-18	02015SC-7113	Hex.Socket Bolt(M4*L8)			O	24	
F-2-19	08004900A000	Color Change Bracket "B"				5	
F-2-20	GP-004943-00	Head Transportation Shaft UH1504D				2	
	06000114UH60	Head Transportation Shaft UH1506D					
	GP-005043-00	UPPER THREAD HOOK DRIVING SHAF UH1208D					
	GP-005089-00	UPPER THREAD DRIVING SHAFT UH912D	Oct,06,04 ~ Jan,26,05	X			
	GP-005089-01		Jan,26,05 ~	△			
	06000105UH60	UPPER THREAD DRIVING SHAFT A UH1512D					
F-2-21	07005BM-B002	Take-Up Lever Set				54	
F-2-22	08203000A000	Take-Up Lever Shaft Bush(L)				6	
F-2-23	08200800A000	Take-Up Lever Shaft Bush(R)				6	
F-2-24	11047PR-A002	Cable Support "B"				6	

F

F-2

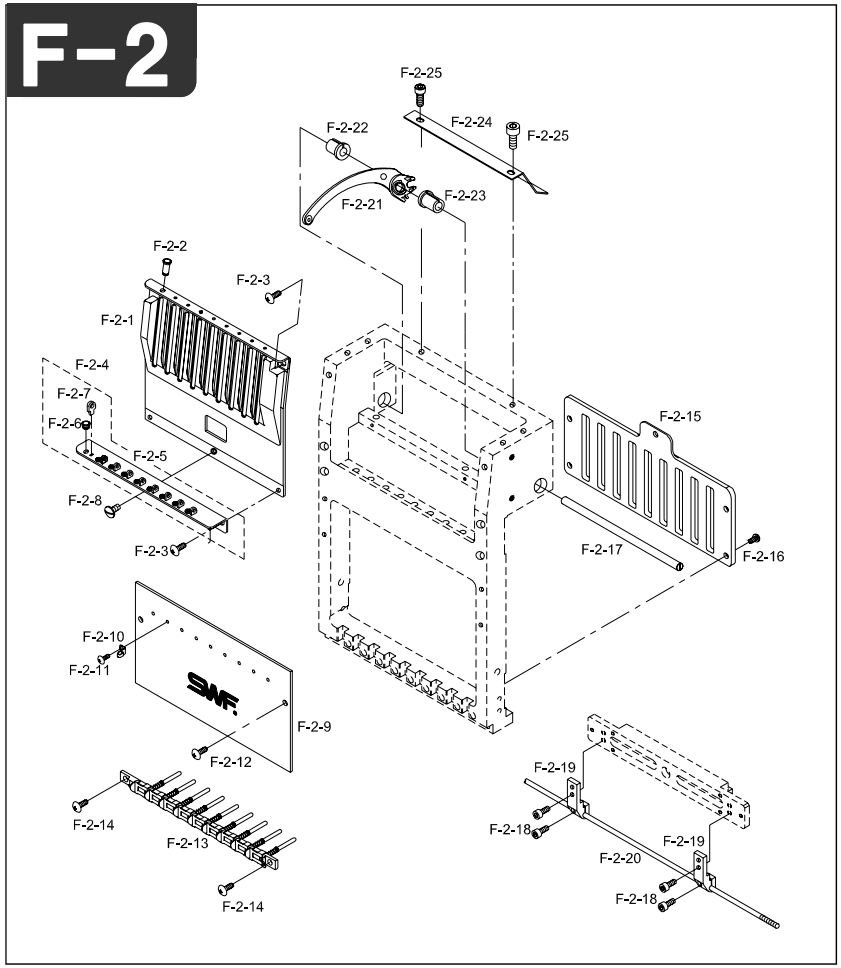

Note

Ref.No	Part No.	Part Name	Application date	Interchangeability	Hardware	Q'ty	Remarks
F-2-25	02023SC-7113	Hex.Socket Bolt(M4*L5)			O	12	

F

F-3

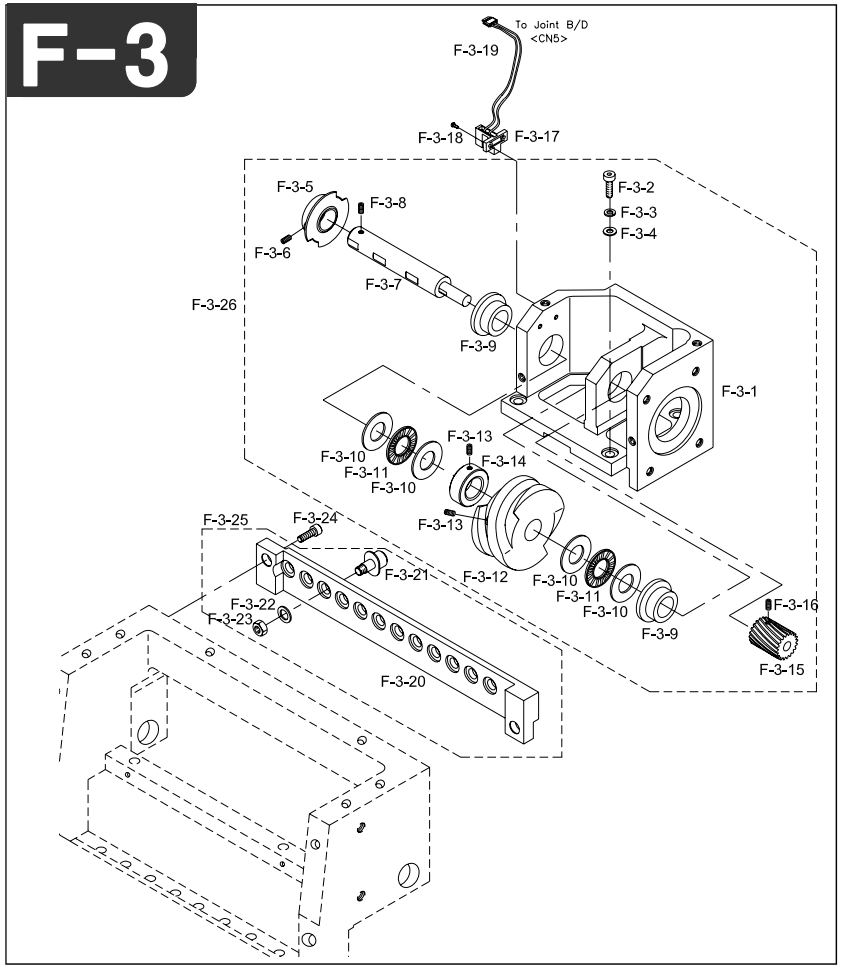

Note

Ref.No	Part No.	Part Name	Application date	Interchangeability	Hardware	Q'ty	Remarks
F-3-1	13001CA-UK06	Color Change Base				2	
F-3-2	05008SC-4113	Hex.Socket Bolt (M4*L16)			O	8	
F-3-3	18014SW-3115	Spring Washer (@4-No2)			O	8	
F-3-4	18015SW-3111	Washer (4@)			O	8	
F-3-5	13032AD-UK06	Color Change Film Set				2	
F-3-6	04014SC-4517	Hex.Socket Set Screw(M5*L5)			O	4	
F-3-7	13007CW-UK06	Color Change Shaft				2	
F-3-8	08113SC-A001	Collar Screw				2	
F-3-9	GP-006252-00	Cam Bushing				4	
F-3-10	13010BR-T121	Washer(@12*@26*1T)				8	
F-3-11	13041BR-UK01	Washer(12*@26*1T)				4	
F-3-12	13005CM-UK06	Color Change Cam				2	
F-3-13	04012AF-A001	Hook Shaft Bush Screw			O	6	
F-3-14	13010CW-UK06	Color Change Collar				2	
F-3-15	13021GA-UK06	Color Change Gear (R)				2	
F-3-16	08113SC-A001	Collar Screw			O	4	
F-3-17	08102300B000	Half Turn Sensor (Gp1S51V)				2	
F-3-18	08006SC-8118	Plus Screw (M3*L5)			O	4	
F-3-19	25037EL-UK01	Half Turn Cable (2Ht-36)				2	
F-3-20	13026CL-D104	Color Change Roller Base (9C)				2	
	13026CL-UK06	Color Change Roller Base (12C)					
	13026CL-UK16	Color Change Roller Base (15C)					
F-3-21	15029AF-T121	Roller Set				30	
F-3-22	18048SW-3115	Spring Washer (@5)			O	30	
F-3-23	12010SN-1211	Hex.Nut (M5)			O	30	
F-3-24	18047SC-7113	Hex/ Socket Bolt (M5*L15)			O	4	
F-3-25	05000003U000	Color Change Roller Base (9C)				1	
	05000004U000	Asst (12C)					
	05000005U000	(15C)					
F-3-26	AS-004640-00	Color Change Motor Assy	May,08,06 ~	X		1	

F

F-4

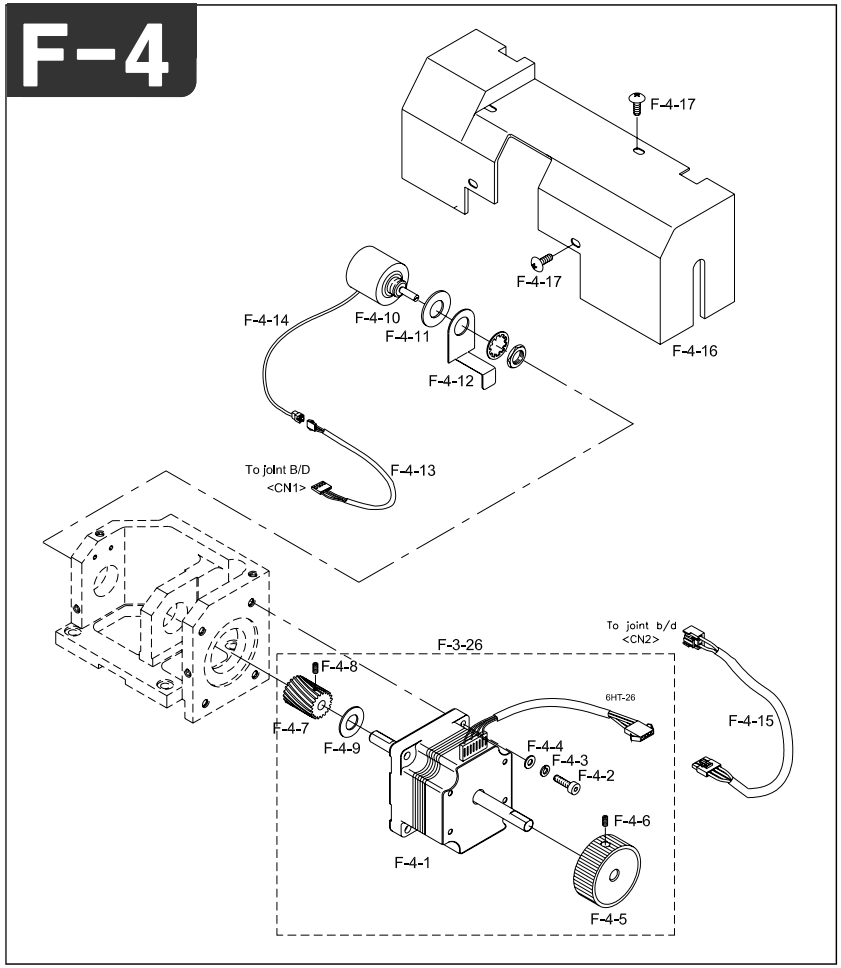

Note

Ref.No	Part No.	Part Name	Application date	Interchangeability	Hardware	Q'ty	Remarks
F-4-1	EP-000140-00	Color Change Motor				2	
F-4-2	05008SC-4113	Hex.Socket Bolt (M4*L16)			O	8	
F-4-3	02028SW-9115	Spring Washer (@4)			O	8	
F-4-4	05009SW-1111	Washer (@4-L)			O	8	
F-4-5	13022AD-UK06	Color Change Passivity Handle				2	
F-4-6	03020SC-A001	Drive Pin Screw 11/64-N40-L8				4	
F-4-7	13020GA-UK06	Color Change Gear (L)				2	
F-4-8	08113SC-A001	Collar Screw			O	4	
F-4-9	13019PR-A001	Half Turm Film Washer (T1.0)				2	
F-4-10	15012MT-T121	Potentiometer (7824 R1K L25)				2	
F-4-11	15014PR-T121	Potentiometer Washer				2	
F-4-12	13015PR-UK06	Potentiometer Bracket				2	
F-4-13	25035EL-UK01	Cc Poten. Meter To J/B (4Ht-35) (UK1202) (UK1204)				2	
F-4-14	25036EL-UK01	Cc Potentiometer Cable (4Ht-36) (UK1206) (UH1506C)				2	
F-4-15	25029EL-UK01	C/C Motor Cable (2Ht-28)				2	
F-4-16	GP-011303-00	Color Change Cover				2	
F-4-17	04006MC-9123	TRUSS SCREW(M4*L6) SUS			O	8	

F

Thread Tension Unit

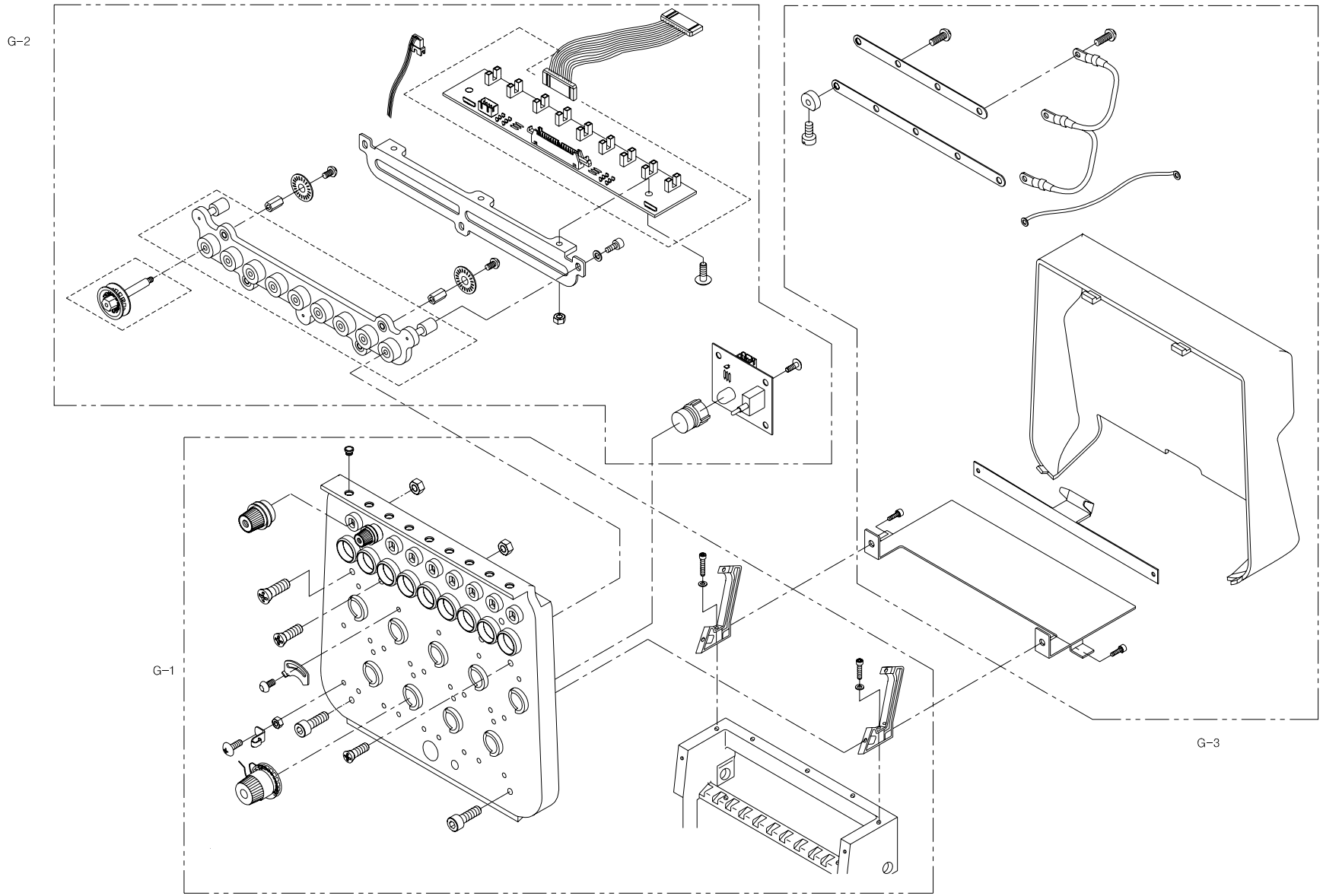

G-1

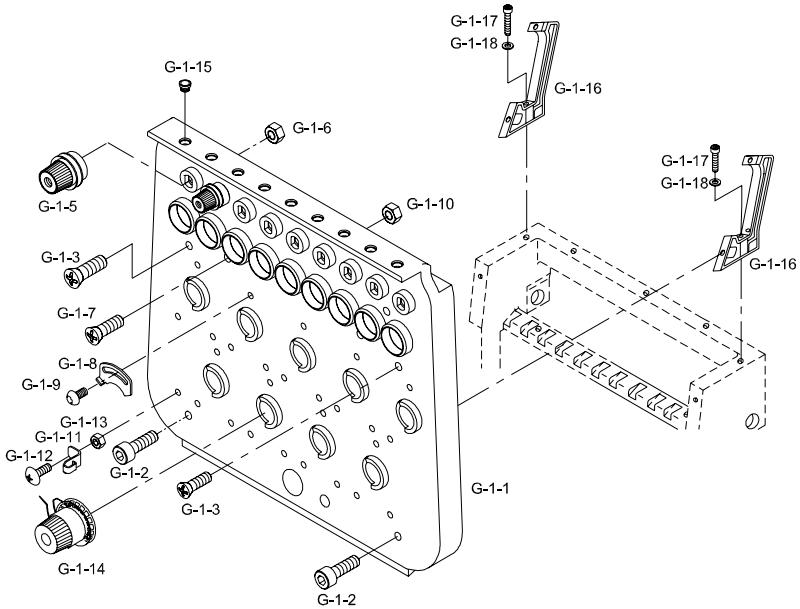

Note

Ref.No	Part No.	Part Name	Application date	Interchangeability	Hardware	Q'ty	Remarks
G-1-2	08300103I000	Tension Unit				6	
G-1-3	04010MC-7113	Hex.Socket Bolt (M4*L10)			O	12	
G-1-4	15089SC-7119	C.S Screw (M4*L10)			O	12	
G-1-5	08320000I000	Sub Tension Adjusting Set				54	
G-1-6	03031SN-A001	Pin. Nut (11/64-N=40)			O	54	
G-1-7	02002SC-7119	Pluss Screw (M4*L8)			O	24	
G-1-8	11009PR-B001	Thread Breakage Detecting Plate				54	
G-1-9	09005SC-3123	Truss Screw (M3*L6)			O	54	
G-1-10	11014SN-1211	Hex.Nut (M3-No2)			O	54	
G-1-11	11012PR-B001	Thread Guide (New)				108	
G-1-12	09005SC-3123	Truss Screw (M3*L6)			O	108	
G-1-13	11014SN-1211	Hex.Nut (M3-No2)			O	108	
G-1-14	08310000B000	Tension Adjusting Set				54	
G-1-15	05452CM-A001	Eyelet "A"				54	
G-1-16	08202000A000	Tension Plate Holder (9C)				12	
	08202000I000	Tension Plate Holder (12C)					
	11020PM-B001	Tension Plate Holder (15C)					
G-1-17	11021SC-4113	Hex. Socket Bolt (M4*L35)			O	12	
G-1-18	18015SW-3111	Washer (4@)			O	12	
G-1-19	AS-000476-00	Tension Unit	Jun,23,04 ~			6	
	AS-000476-01		May,10,07 ~				

G

G-2

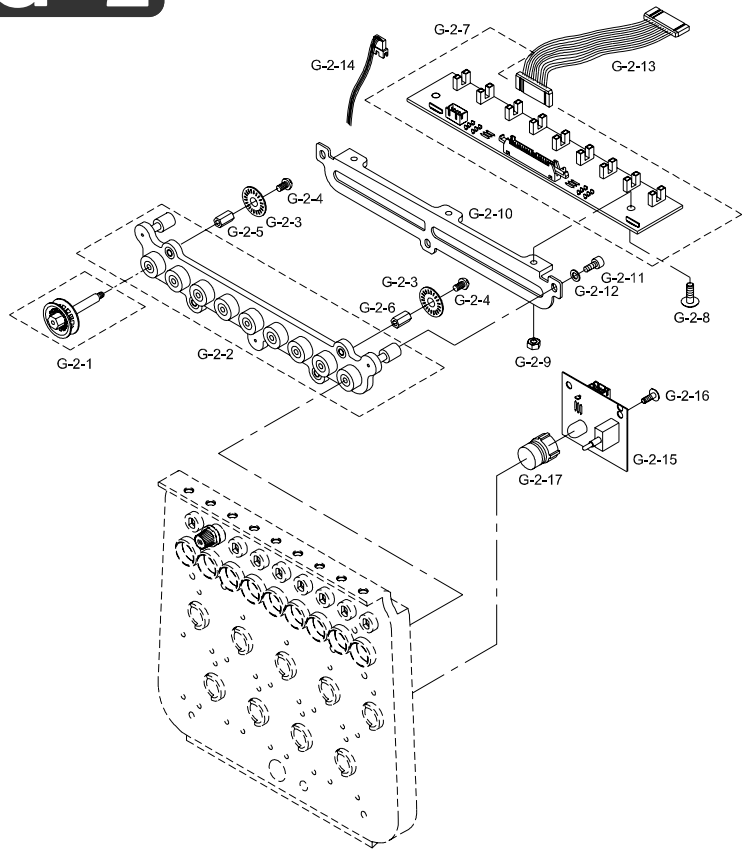

Note

Ref.No	Part No.	Part Name	Application date	Interchangeability	Hardware	Q'ty	Remarks
G-2-1	11075PM-B001	Thread Sensor Roller(B1)Set				54	
G-2-2	08300703I000	Roller Base Ass'y				6	
G-2-3	08300800B000	Thread Breakage Wheel				54	
G-2-4	08011SC-8118	Screw (M2*L4)			O	54	
G-2-5	08308300B000	Thread Detecting Wheel Stud "B"				30	
G-2-6	11083CW-B001	Thread Detecting Wheel Stud "A"				24	
G-2-7	20009EL-WH09	Wheel Sensor Board 9C				6	
G-2-8	02010SC-3123	Truss Screw (M4*L8)			O	18	
G-2-9	05016SN-1211	Nut (@4)			O	18	
G-2-10	08300203I000	Board Base				6	
G-2-11	02023SC-7113	Hex.Socket Bolt (M4*L8)			O	18	
G-2-12	18015SW-3111	Washer (4@)			O	18	
G-2-13	02101000H000	Plate To B/B Cable				6	
G-2-14	02101800B000	PLATE LED S/W BOARD CABLE				6	
G-2-15	02-0000-EMB1	Head On/Off S/W Board 9C-15C				6	
G-2-16	09005SC-3123	Truss Screw (M3*L6)			O	24	
G-2-17	08300400A000	Lamp Cover				6	

G

G-3

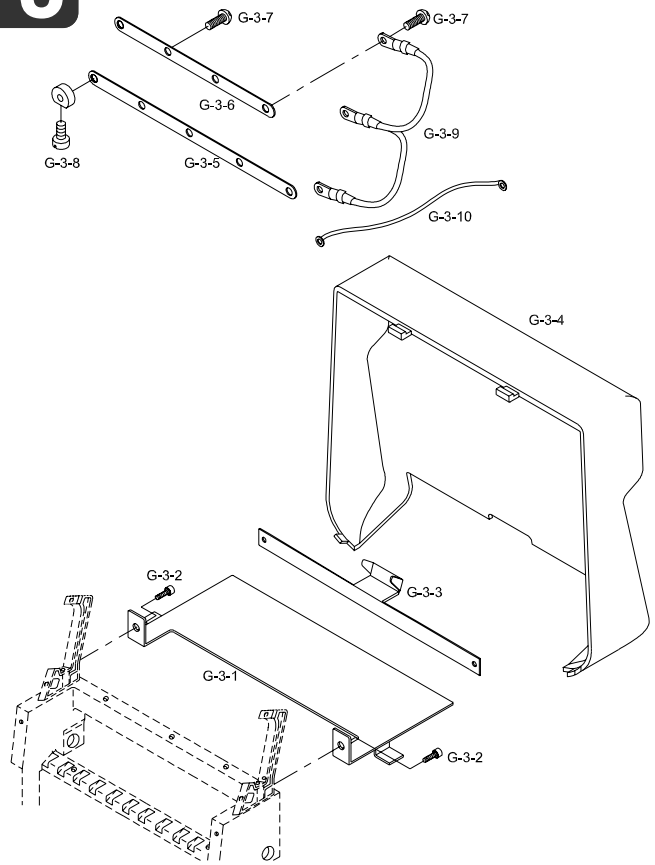

Note

Ref.No	Part No.	Part Name	Application date	Interchangeability	Hardware	Q'ty	Remarks
G-3-1	08002603H000	Cover Plate A				6	
G-3-2	02023SC-7113	Hex. Socket Bolt (M4*L8)			O	12	
G-3-3	11032PR-T151	CABLE SUPPORTER				2	
G-3-4	08000803I000	Tension Plate Cover				6	
G-3-5	08300303I000	Insert Bush. Connecting Plate "A"				6	
G-3-6	08300403I000	Insert Bush. Connecting Plate "B"				6	
G-3-7	09005SC-3123	Truss Screw (M3*L6)			O	54	
G-3-8	11009SC-A001	Stud Screw				54	
G-3-9	02103903H000	Wheel Earth 6-9-12C				6	
G-3-10	25126EL-B001	Sensor Board To Wheel Earth				6	

G

X-Y Drive (UH1504D-45)

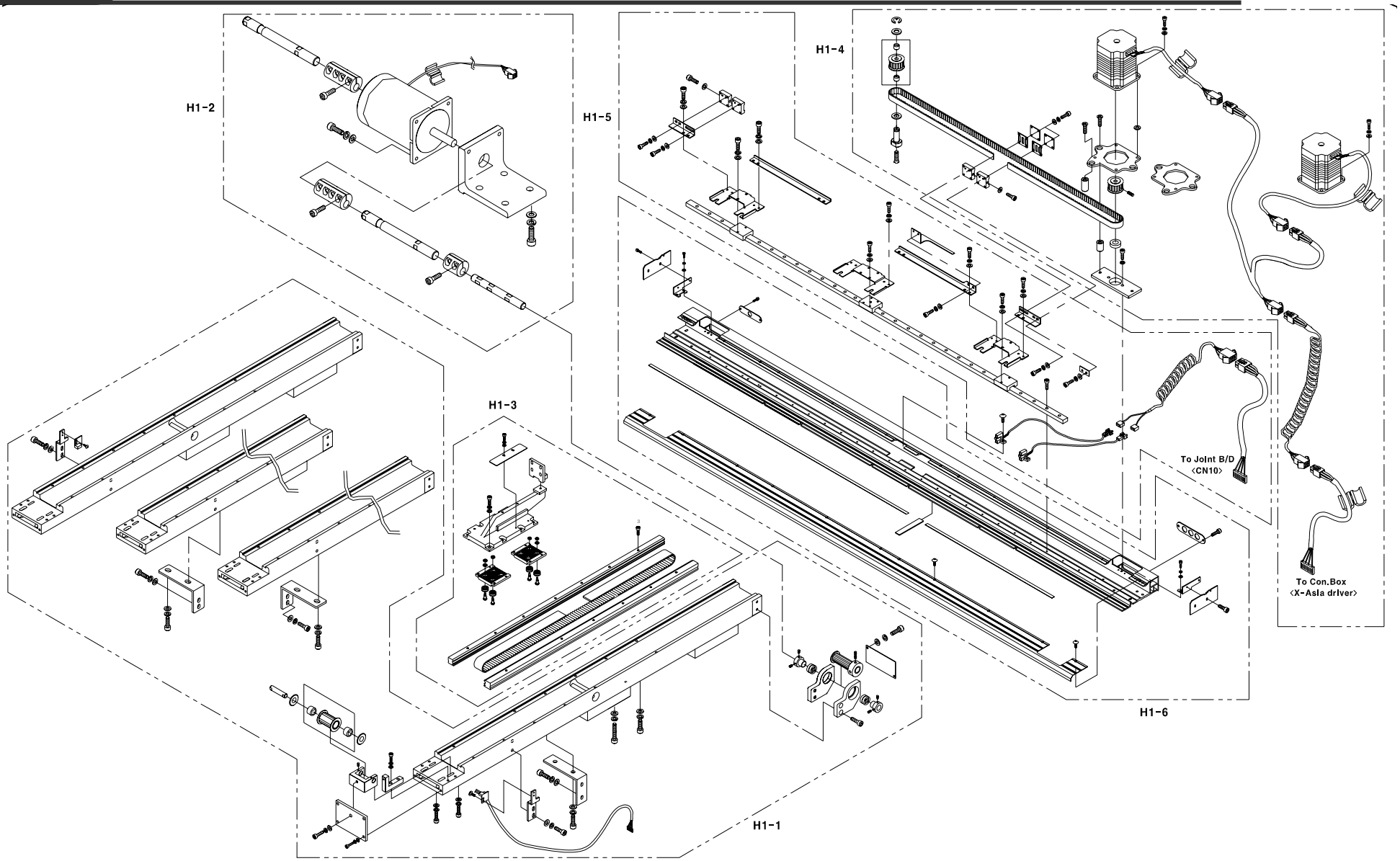

H1-1

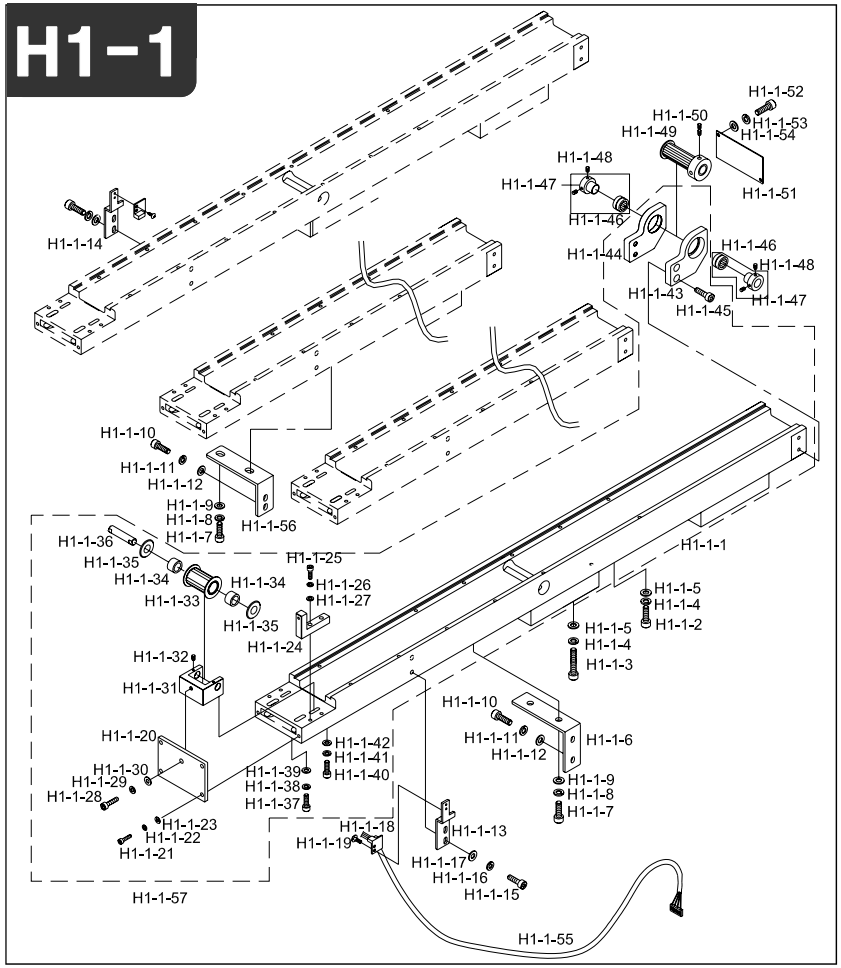

Note

Ref.No	Part No.	Part Name	Application date	Interchangeability	Hardware	Q'ty	Remarks
H1-1-1	GP-004930-00	Y-LM Guide Frame L620	Sep,25,04 ~ Mar,12,06	X		4	
	GP-004930-01		Mar,13,06 ~	△			
H1-1-2	04016MC-4113	CAM ROLLER GUIDE FIXED SCREW				56	
H1-1-3	02033SC-4113	Hex. Socket Bolt			O	16	
H1-1-4	03003SC-4113	Hex. Socket Bolt "B"(M8*L35)			O	12	
H1-1-5	15095SW-3115	Spring Washer (@8)			O	28	
H1-1-6	16074PR-UK06	Y-Lm Support Fixing Plate				2	
H1-1-7	14002SC-7113	Hex.Socket Bolt (M6*L15)			O	8	
H1-1-8	16014SW-4115	Spring Washer (@6)			O	8	
H1-1-9	08057SW-1111	Washer (@6)			O	8	
H1-1-10	03016SC-4113	Hex. Socket Bolt (M5*L15)			O	8	
H1-1-11	18048SW-3115	Spring Washer (@5)			O	8	
H1-1-12	16018SW-1111	Washer (@5)			O	8	
H1-1-13	03101300UH00	Sensor Bracket				1	
H1-1-14	03101300UH00	Sensor Bracket				1	
H1-1-15	02015SC-7113	Hex.Socket Bolt(M4*L10)			O	4	
H1-1-16	02028SW-9115	Spring Washer (@4)			O	4	
H1-1-17	05009SW-1111	Washer (@4-L)			O	4	
H1-1-18	02107300UH80	Cable (Sh-73)				2	
H1-1-19	06010SC-8118	Plus Screw (M3*L4)			O	4	
H1-1-20	03100600UH00	Tension Adjusting Plate				4	
H1-1-21	07016SC-7113	Hex.Socket Bolt (M4*L12)			O	8	
H1-1-22	18014SW-3115	Spring Washer (@4-No2)			O	8	
H1-1-23	18015SW-3111	Washer (4@)			O	16	
H1-1-24	03100700UH00	Fixed Block				4	
H1-1-25	11029SC-4113	Hex. Socket Bolt (M4*L20)			O	4	
H1-1-26	18014SW-3115	Spring Washer (@4-No2)			O	4	
H1-1-27	18015SW-3111	Washer (4@)			O	4	
H1-1-28	15030SC-7113	Hex. Socket Bolt (M5*L30)			O	4	
H1-1-29	18048SW-3115	Spring Washer (@5)			O	4	
H1-1-30	16018SW-1111	Washer (@5)			O	4	
H1-1-31	03100500UH00	Y-Tension Adjusting Bracket			O	4	
H1-1-32	08007SC-4517	Hex. Socket Set Screw (M3*L5)				8	
H1-1-33	04500100U000	Y-Drive Timing Pulley			O	4	
H1-1-34	12018BR-T121	Needle Bearing Hk1010(Ina)				8	
H1-1-35	12019BR-T121	Fiber Washer R-Tw1020				8	
H1-1-36	16100CW-UK06	Timing Pulley Shaft (Y)				4	
H1-1-37	08062SC-7113	Hex. Socket Bolt (M5*L20)				8	

H1-1

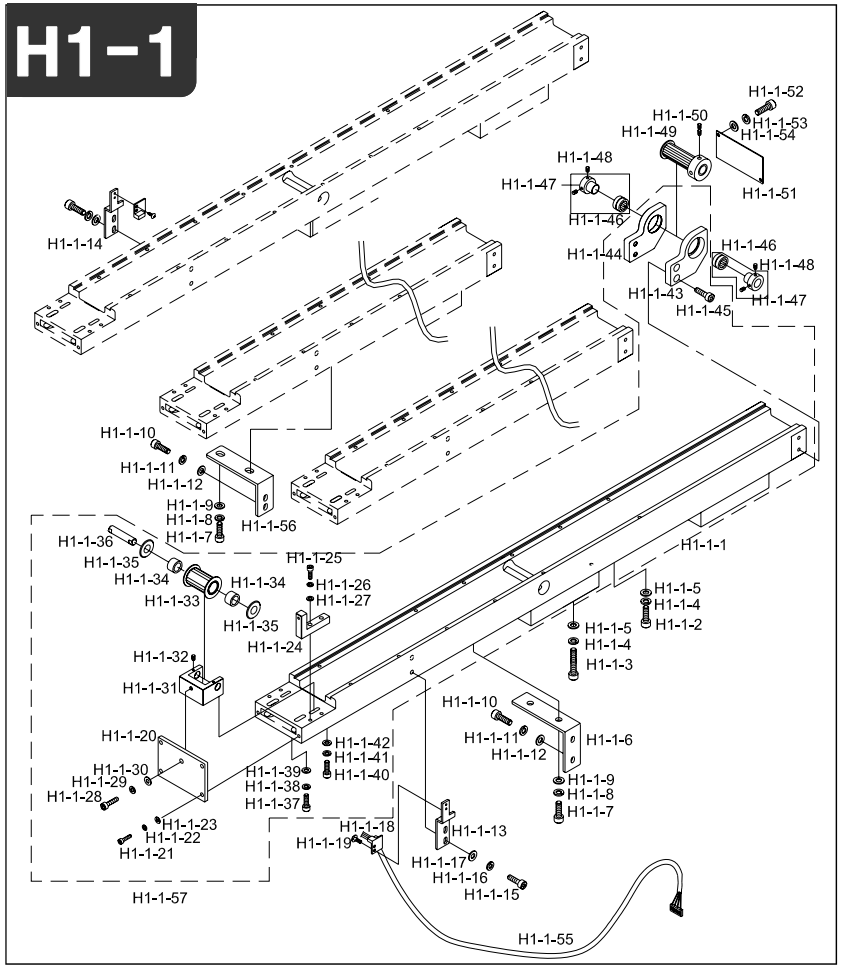

Note

Ref.No	Part No.	Part Name	Application date	Interchangeability	Hardware	Q'ty	Remarks
H1-1-38	18048SW-3115	Spring Washer (@5)			O	8	
H1-1-39	16018SW-1111	Washer (@5)			O	8	
H1-1-40	03016SC-4113	Hex. Socket Bolt (M5*L15)			O	4	
H1-1-41	18014SW-3115	Spring Washer (@4-No2)			O	4	
H1-1-42	18015SW-3111	Washer (4@)			O	4	
H1-1-43	03101000UH00	Y-Bearing Bracket (R)				4	
H1-1-44	03100900UH00	Y-Bearing Bracket (L)				4	
H1-1-45	08091SC-7113	Hex. Socket Bolt (M6*L20)			O	16	
H1-1-46	13026BR-T121	Needle Bearing (6002Z)			O	4	
H1-1-47	03002700T000	Bearing Collar				8	
H1-1-48	03037AF-A001	Driver Screw				16	
H1-1-49	04001000U000	Y-Drive Timing Pulley				4	
H1-1-50	04014SC-4517	Hex.Socket Set Screw(M5*L5)			O	16	
H1-1-51	03101100UH00	Y-Bearing Bracket Cover				4	
H1-1-52	07035SC-7113	Bracket Screw (M3*L6)			O	16	
H1-1-53	11019SW-9115	Spring Washer (3@)			O	16	
H1-1-54	08011SW-1111	Spring Washer (@3-S)			O	16	
H1-1-55	TTS-42-01	Y-ORIGIN IN Connecting Cable				1	
H1-1-56	GP-005022-00	Y-Lm Support Fixing Plate(A)	Oct,01,04 ~	X		2	
H1-1-57	AS-002856-00	Y-Frame Assy (UH1506D)	May,12,05 ~	X		4	

H1

H1-2

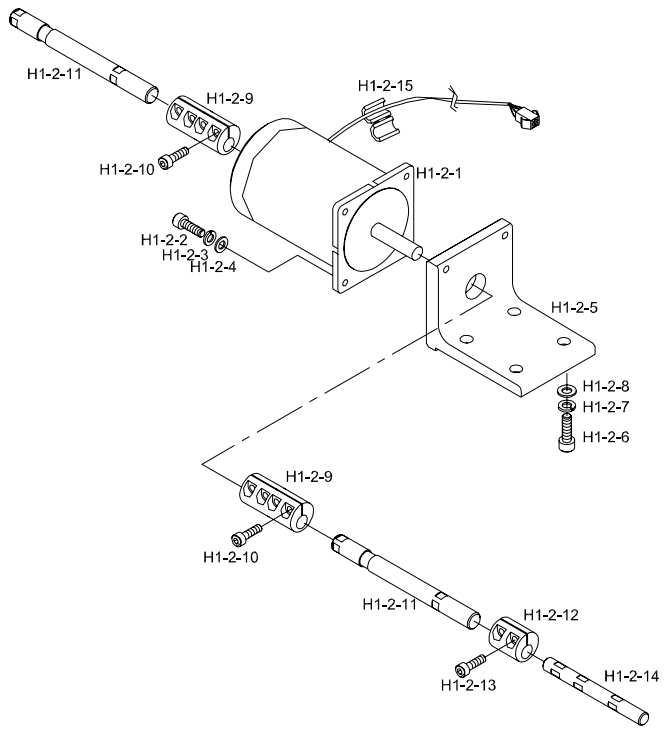

Note

Ref.No	Part No.	Part Name	Application date	Interchangeability	Hardware	Q'ty	Remarks
H1-2-1	16055MT-UK06	Y Motor				2	
H1-2-2	08062SC-7113	Hex.Socket Bolt (M5*L20)			O	8	
H1-2-3	18048SW-3115	Spring Washer (@5)			O	8	
H1-2-4	16018SW-1111	Washer (@5)			O	8	
H1-2-5	15057CS-UK01	Y-Driving Motor Bracket				2	
H1-2-6	14027SC-4113	Hex.Socket Bolt (M8*L30)			O	8	
H1-2-7	15095SW-3115	Spring Washer (@8)			O	8	
H1-2-8	04029SW-A001	Stud Bolt Washer(S) (@8)			O	8	
H1-2-9	03003800B000	Coupling				4	
H1-2-10	08091SC-7113	Hex. Socket Bolt (M6*L20)			O	16	
H1-2-11	03100800UH60	Y-Driving Shaft "A"				4	
H1-2-12	03005100U000	Coupling "A"				4	
H1-2-13	03016SC-4113	Hex. Socket Bolt (M5*L15)			O	8	
H1-2-14	GP-004944-00	Y-Driving Shaft				4	
H1-2-15	15045EL-UK01	Bid (L)				2	

H1-3

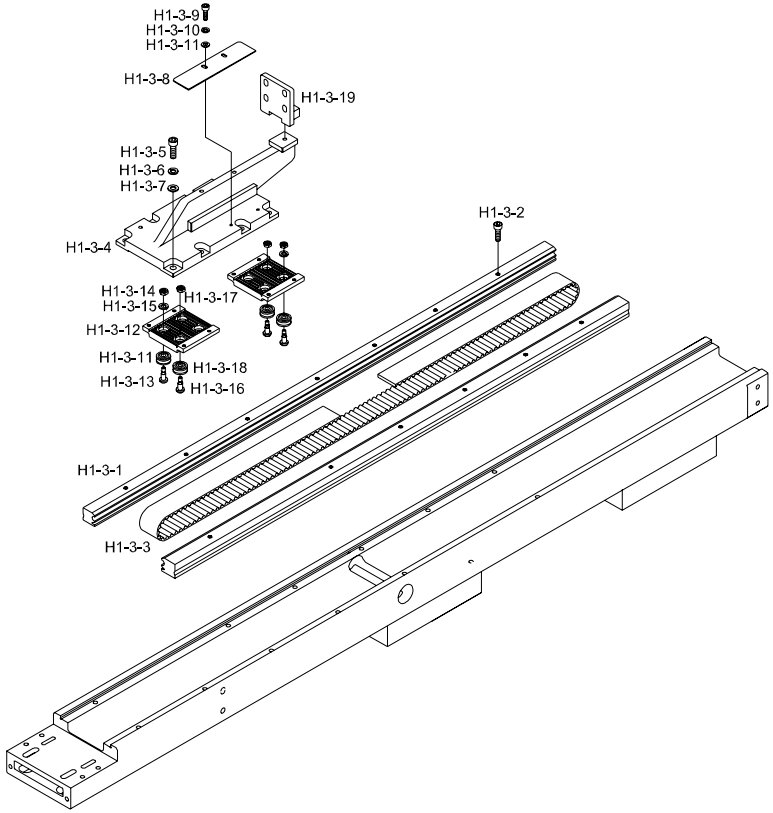

Note

Ref.No	Part No.	Part Name	Application date	Interchangeability	Hardware	Q'ty	Remarks
H1-3-1	GP-004147-00	Cam Roller Guide Rail (L590)				8	
H1-3-2	04016MC-4113	CAM ROLLER GUIDE FIXED SCREW				56	
H1-3-3	03100400UH01	Y-Driving Timing Belt				4	
H1-3-4	GP-005021-00	Bracket For X-Y Connecting				4	
H1-3-5	07016SC-7113	Hex.Socket Bolt (M4*L12)			O	32	
H1-3-6	18014SW-3115	Spring Washer (@4-No2)			O	32	
H1-3-7	05009SW-1111	Washer (@4-L)			O	32	
H1-3-8	03010400UH00	Plate For Y-Sensing				2	
H1-3-9	22006SC-7113	Hex. Socket Bolt (M3*L8)			O	4	
H1-3-10	11019SW-9115	Spring Washer (3@)			O	4	
H1-3-11	08011SW-1111	Spring Washer (@3-S)			O	4	
H1-3-12	16104CL-H001	Belt Catcher Plate (Y)				8	
H1-3-13	15002CW-B001	Cam Roller Stud (A)			O	16	
H1-3-14	15029SN-3211	Hex. Nut (M4-No2)			O	16	
H1-3-15	02028SW-9115	Spring Washer (@4)				16	
H1-3-16	15003CW-B001	Cam Roller Stud (B)				16	
H1-3-17	12010SN-1211	Hex.Nut (M5)			O	16	
H1-3-18	15001BR-B001	Cam Roller Bearing				32	
H1-3-19	03101500UH00	Bracket for X-Y Sub Connecting				4	

H1-4

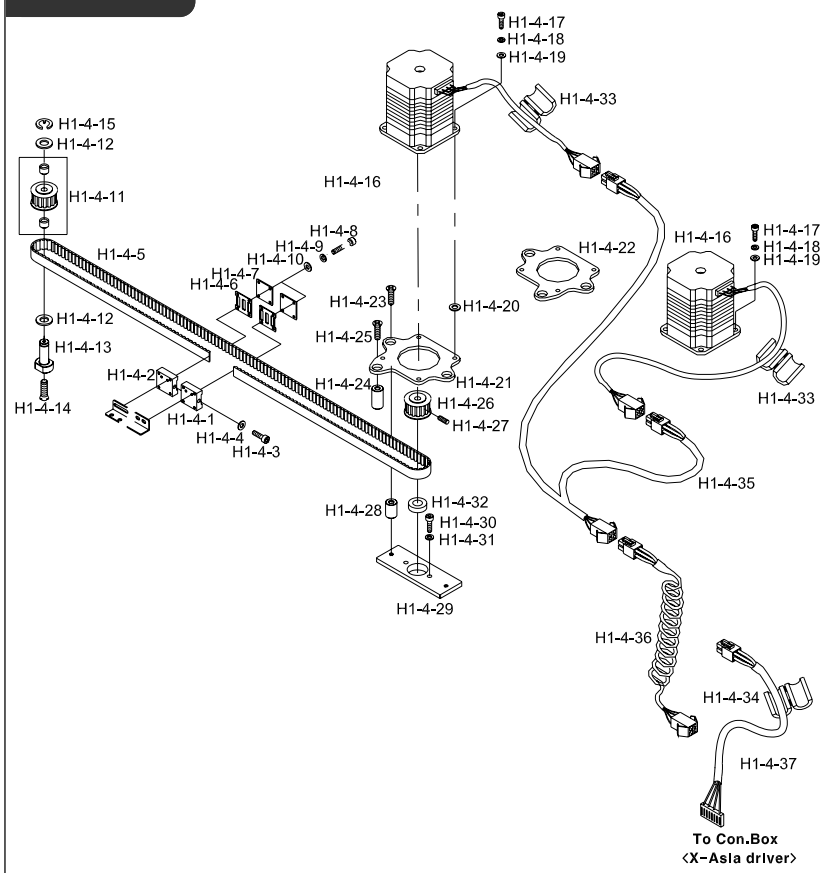

Note

Ref.No	Part No.	Part Name	Application date	Interchangeability	Hardware	Q'ty	Remarks
H1-4-1	14045AD-UK01	Belt Bracket (B)				2	
H1-4-2	14049AD-UK01	Belt Bracket (C)				2	
H1-4-3	15034SC-4113	Hex. Socket Bolt (M4*L45)			O	2	
H1-4-4	18015SW-3111	Washer (@4)			O	4	
H1-4-5	12048BT-T121	X-Axis Timing Belt				2	
H1-4-6	14051PR-UK01	Fixing Plate				8	
H1-4-7	14052PR-UK01	Fixing Plate Holder				8	
H1-4-8	03071SC-7113	HEX. SOCKET BOLT (M3*L10)			O	16	
H1-4-9	11019SW-9115	Spring Washer (3@)			O	16	
H1-4-10	08011SW-1111	Spring Washer (@3-S)			O	16	
H1-4-11	12017PU-T121	Timing Pulley "A"				4	
	12018BR-T121	Needle Bearing Hk1010(Ina)			O	8	
H1-4-12	12019BR-T121	Fiber Washer R-Tw1020				8	
H1-4-13	03106000U000	Timing Pulley Driving Pin				4	
H1-4-14	15048SC-4119	Plus Screw (M5*L12)			O	4	
H1-4-15	08044SR-4013	E-Ring (@8)			O	4	
H1-4-16	05100100T000	X-Motor (103H7126-2851)				4	
H1-4-17	08076SC-7113	Hex. Socket Bolt (M5*L12)			O	16	
H1-4-18	18048SW-3115	Spring Washer (@5)			O	16	
H1-4-19	16018SW-1111	Washer (@5)			O	16	
H1-4-20	15059PR-UK02	X-Motor Space				16	
H1-4-21	15061PR-UK02	X-Motor Base(R)				2	
H1-4-22	15060PR-UK02	X-Motor Base(L)				2	
H1-4-23	15053SC-4119	Plus Screw (M5*L30)			O	8	
H1-4-24	14067AD-UK01	Motor Fixing Shaft (B)				4	
H1-4-25	15055SC-4119	Plus Screw (M5*L35)			O	4	
H1-4-26	14063PU-UK01	Timing Pulley "B"				4	
H1-4-27	04014SC-4517	Hex.Socket Set Screw(M5*L5)			O	8	
H1-4-28	14065AD-UK01	Motor Fixing Shaft (A)				8	
H1-4-29	03000100U020	X-Motor Fixing Block				4	
H1-4-30	08076SC-7113	Hex. Socket Bolt (M5*L12)			O	8	
H1-4-31	18048SW-3115	Spring Washer (@5)			O	8	
H1-4-32	15077BR-A001	Ball Bearing (698Zz)			O	4	
H1-4-33	15044EL-T121	Bid (S)				4	
H1-4-34	15045EL-UK01	Bid (L)				2	
H1-4-35	25013EL-UK02	X-Step Motor Driving Power 3				2	
H1-4-36	25019EL-T121	Power Cable 2 (1Ht-19)				2	
H1-4-37	02101300U040	X-Step Motor Driving Power				2	

H1-5

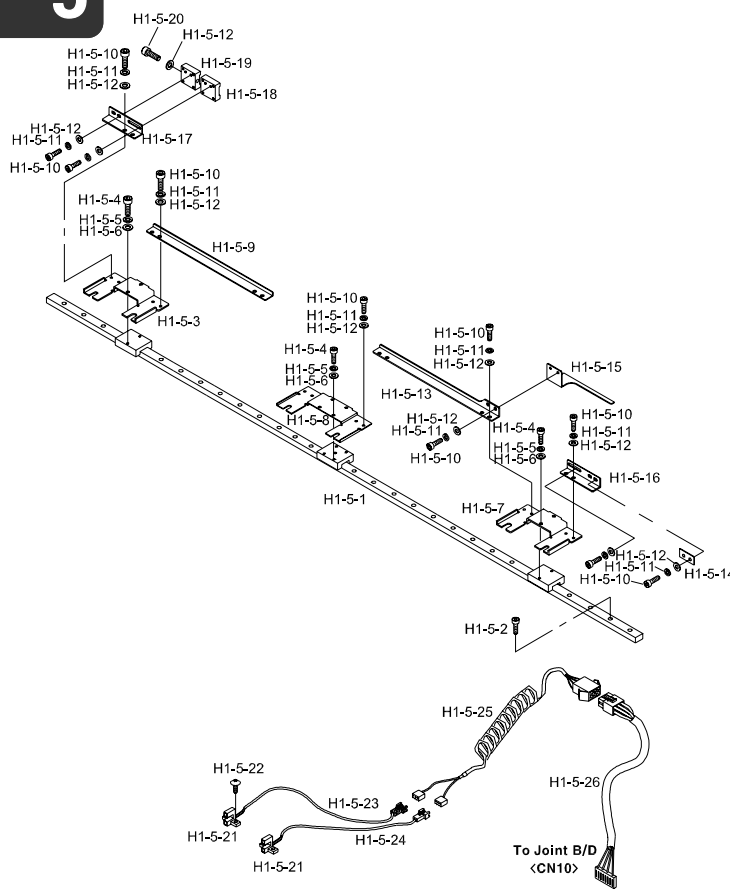

Ref.No	Part No.	Part Name	Application date	Interchangeability	Hardware	Q'ty	Remarks
H1-5-1	GP-004918-00	X-Lm Guide (Sr15W,L1480)				2	
H1-5-2	22006SC-7113	Hex. Socket Bolt (M3*L8)			O	42	
H1-5-3	GP-004917-00	Connecting Plate(L)				2	
H1-5-4	22006SC-7113	Hex. Socket Bolt (M3*L8)			O	16	
H1-5-5	11019SW-9115	Spring Washer (3@)			O	16	
H1-5-6	08011SW-1111	Spring Washer (@3-S)			O	16	
H1-5-7	GP-004916-00	Connecting Plate(R)				2	
H1-5-8	15015PR-UK02	Connecting Plate				2	
H1-5-9	GP-004922-00	Lm Block Connecting Plate(L)				2	
H1-5-10	02023SC-7113	Hex. Socket Bolt (M4*L8)			O	36	
H1-5-11	02028SW-9115	Spring Washer (@4)			O	44	
H1-5-12	18015SW-3111	Washer (@4)			O	40	
H1-5-13	GP-004921-00	Lm Block Connecting Plate(R)				2	
H1-5-14	14020PR-UK01	Space				4	
H1-5-15	GP-004923-00	Perception Plate	Sep,25,04 ~ Apr,23,07	X		2	
	GP-004923-01		Apr,24,07 ~	△		2	
H1-5-16	GP-004920-00	LM Block Driving Plate(R)				4	
H1-5-17	GP-004919-00	LM Block Driving Plate(L)				4	
H1-5-18	14048AD-UK01	Belt Bracket (A)				2	
H1-5-19	14045AD-UK01	Belt Bracket (B)				2	
H1-5-20	15034SC-4113	Hex. Socket Bolt (M4*L45)			O	2	
H1-5-21	08102300B000	Half Turn Sensor (Gp1S51V)				4	
H1-5-22	06010SC-8118	Plus Screw(M3*L4)			O	8	
H1-5-23	25046EL-UK02	X-Original In Sensor (White)				2	
H1-5-24	25047EL-UK02	X-Original In Sensor (Black)				2	
H1-5-25	25040EL-T121	X-Original In Con. (1Ht-40)				2	
H1-5-26	25041EL-UK01	X Original In (4Ht-41)				2	

Note

H1-6

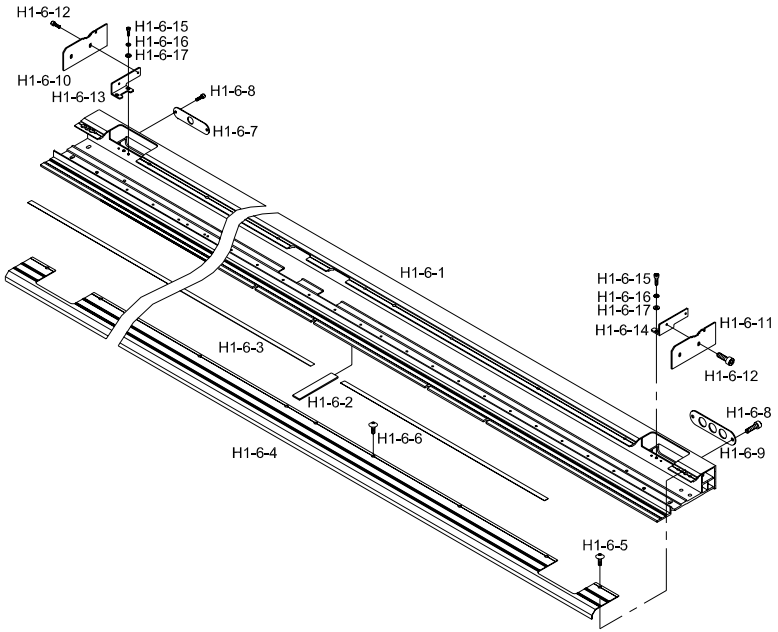

Note

Ref.No	Part No.	Part Name	Application date	Interchangeability	Hardware	Q'ty	Remarks
H1-6-1	GP-004929-00	X-FRAME	Sep,25,04 ~ Dec,01,04	X		2	
	GP-004929-01		Dec,02,04 ~ Mar,04,05	△		2	
	GP-004929-02		Mar,05,05 ~ Jun,01,05	△		2	
	GP-004929-03		Jun,02,05 ~ Oct,18,06	△		2	
	GP-004929-04		Oct,19,06 ~	△		2	
H1-6-2	15062SF-T121	Felt				6	
H1-6-3	GP-005047-00	Tubular Frame Rail Plate				2	
H1-6-4	GP-004924-00	X-Frame Cover				2	
H1-6-5	15042SC-3123	Truss Screw (M4*L6)			O	16	
H1-6-6	18153SC-3123	Plus Screw (M4*L10)			O	4	
H1-6-7	15082PR-W121	FIXING PLATE FOR BUSHING				2	
H1-6-8	02023SC-7113	HEX.SOCKET BOLT (M4*L8)			O	8	
H1-6-9	15087PR-UK02	Cable Plate For Bushing				2	
H1-6-10	GP-005106-00	X-FRAME SIDE COVER L				2	
H1-6-11	GP-005107-00	X-FRAME SIDE COVER R				2	
H1-6-12	15042SC-3123	TRUSS SCREW (M4*L6)			O	8	
H1-6-13	GP-005104-00	X-Frame Side Cover Holder (L)				2	
H1-6-14	GP-005105-00	X-Frame Side Cover Holder (R)				2	
H1-6-15	02004SC-4113	HEX. SOCKET BOLT (M4*L8)			O	16	
H1-6-16	18014SW-3115	SPRING WASHER (@4-NO2)			O	16	
H1-6-17	18015SW-3111	WASHER (4@)			O	16	

X-Y Drive (UH1506D-45)

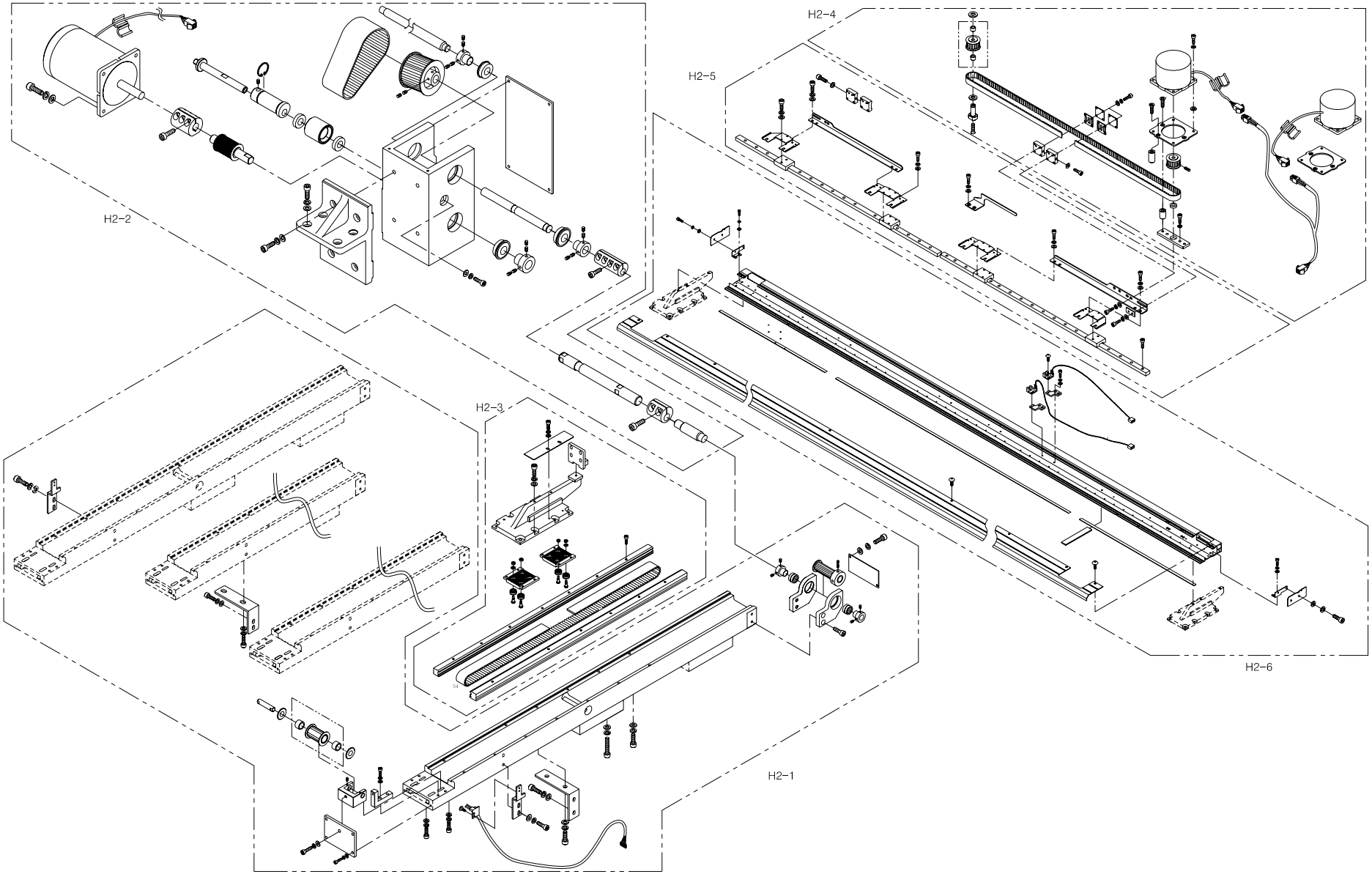

H2-1

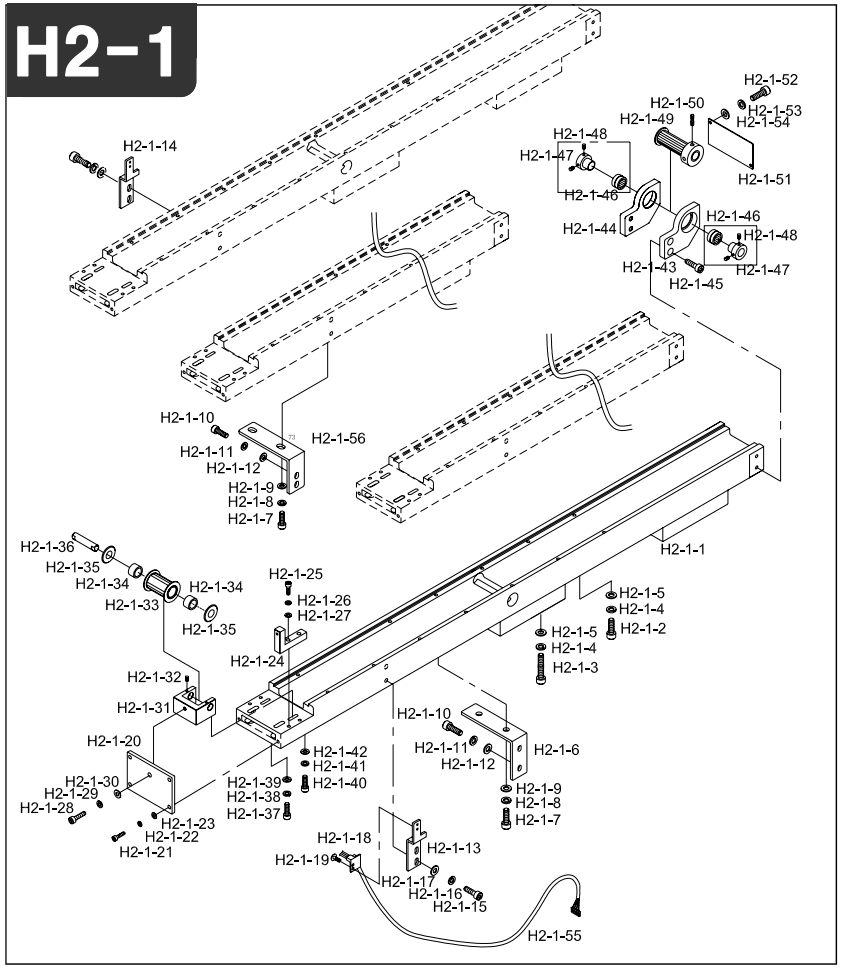

Note

Ref.No	Part No.	Part Name	Application date	Interchangeability	Hardware	Q'ty	Remarks
H2-1-1	03003000UH60	Y-LM Guide Frame L620				4	
H2-1-2	14027SC-4113	Hex. Socket Bolt			O	16	
H2-1-3	03003SC-4113	Hex. Socket Bolt "B"(M8*L35)			O	12	
H2-1-4	15095SW-3115	Spring Washer (@8)			O	28	
H2-1-5	04029SW-A001	Stud Bolt Washer(S) (@8)			O	28	
H2-1-6	16074PR-UK06	Y-Lm Support Fixing Plate				2	
H2-1-7	14006SC-7113	Hex.Socket Bolt (M8*L15)			O	8	
H2-1-8	15095SW-3115	Spring Washer (@6)			O	8	
H2-1-9	08041SW-1111	Washer (@6)			O	8	
H2-1-10	08076SC-7113	Hex. Socket Bolt (M5*L15)			O	8	
H2-1-11	18048SW-3115	Spring Washer (@5)			O	8	
H2-1-12	16018SW-1111	Washer (@5)			O	8	
H2-1-13	03101300UH00	Bracket for Y-Sensor				2	
H2-1-14	03101300UH00	Bracket for Y-Sensor				2	
H2-1-15	02015SC-7113	Hex.Socket Bolt(M4*L10)			O	4	
H2-1-16	02028SW-9115	Spring Washer (@4)			O	4	
H2-1-17	05009SW-1111	Washer (@4-L)			O	4	
H2-1-18	09018EL-UK01	Sensor				2	
H2-1-19	08006SC-8118	Plus Screw (M3*L5)			O	4	
H2-1-20	03100600UH00	Tension Adjusting Plate				4	
H2-1-21	07016SC-7113	Hex.Socket Bolt (M4*L12)			O	8	
H2-1-22	18014SW-3115	Spring Washer (@4-No2)			O	8	
H2-1-23	18015SW-3111	Washer (4@)			O	16	
H2-1-24	03100700UH00	Fixed Block				4	
H2-1-25	11029SC-4113	Hex. Socket Bolt (M4*L20)			O	4	
H2-1-26	18014SW-3115	Spring Washer (@4-No2)			O	4	
H2-1-27	18015SW-3111	Washer (4@)			O	4	
H2-1-28	16028SC-7113	Hex. Socket Bolt (M5*L25)			O	4	
H2-1-29	18048SW-3115	Spring Washer (@5)			O	4	
H2-1-30	16018SW-1111	Washer (@5)			O	4	
H2-1-31	03100500UH00	Y-Tension Adjusting Bracket				4	
H2-1-32	08007SC-4517	Hex. Socket Set Screw (M3*L5)			O	8	
H2-1-33	03003400UH60	Y-Drive Timing Pulley				4	
H2-1-34	12018BR-T121	Needle Bearing Hk1010(Ina)				8	
H2-1-35	12019BR-T121	Fiber Washer R-Tw1020				8	
H2-1-36	16100CW-UK06	Timing Pulley Shaft (Y)				4	
H2-1-37	08062SC-7113	Hex. Socket Bolt (M5*L20)			O	8	

H2-1

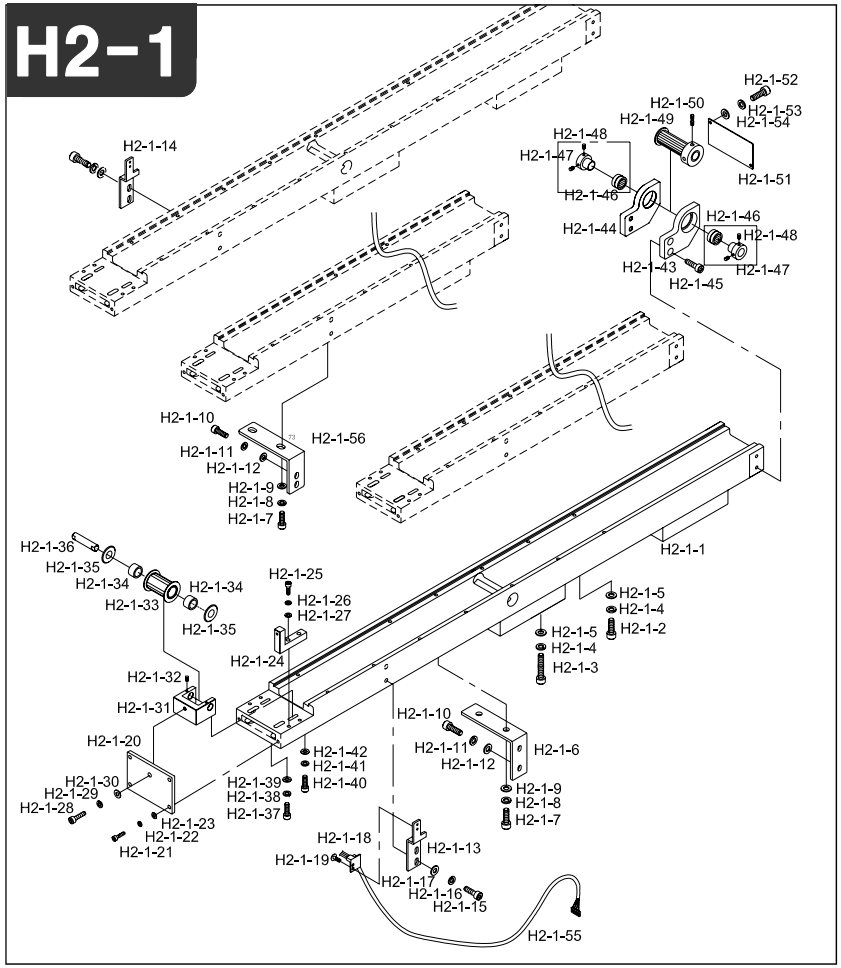

Note

Ref.No	Part No.	Part Name	Application date	Interchangeability	Hardware	Q'ty	Remarks
H2-1-38	18048SW-3115	Spring Washer (@5)			O	8	
H2-1-39	16018SW-1111	Washer (@5)			O	8	
H2-1-40	03016SC-4113	Hex. Socket Bolt (M5*L15)			O	4	
H2-1-41	18014SW-3115	Spring Washer (@4-No2)			O	4	
H2-1-42	18015SW-3111	Washer (4@)			O	4	
H2-1-43	GP-007144-00	Y-Bearing Bracket (R)				4	
H2-1-44	GP-007145-00	Y-Bearing Bracket (L)				4	
H2-1-45	16059SC-7113	Hex. Socket Bolt (M6*L20)			O	16	
H2-1-46	13026BR-T121	Needle Bearing (6002Z)			O	4	
H2-1-47	03002700T000	Bearing Collar				8	
H2-1-48	03037AF-A001	Driver Screw				16	
H2-1-49	04001000 E000	Y-Drive Timing Pulley				4	
H2-1-50	04014SC-4517	Hex.Socket Set Screw(M5*L5)			O	16	
H2-1-51	03101100UH00	Y-Bearing Bracket Cover				4	
H2-1-52	07035SC-7113	Bracket Screw (M3*L6)			O	16	
H2-1-53	11019SW-9115	Spring Washer (3@)			O	16	
H2-1-54	08011SW-1111	Spring Washer (@3-S)			O	16	
H2-1-55	TTS-42-01	Y-ORIGIN IN Connecting Cable				1	
H2-1-56	GP-004150-00	Y-LM Support Fixing Plate(A)				2	

H2-2

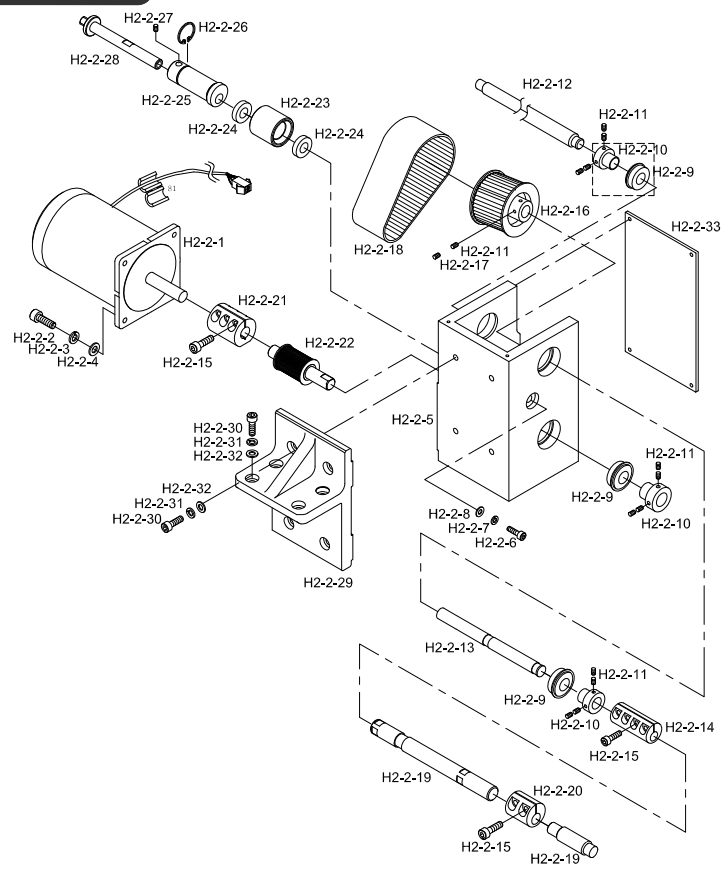

Note

Ref.No	Part No.	Part Name	Application date	Interchangeability	Hardware	Q'ty	Remarks
H2-2-1	16059MT-E131	Y Motor (103H89222-5212)				2	
H2-2-2	14046SC-7113	Hex.Socket Bolt (M6*L30)			O	8	
H2-2-3	16014SW-4115	Spring Washer (@6)			O	8	
H2-2-4	08057SW-1111	Washer (@6)			O	8	
H2-2-5	GP-007511-00	Y-Driving Box				1	
H2-2-6	14002SC-7113	Hex. Socket Bolt (M6*L15)			O	1	
H2-2-7	16014SW-4115	Spring Washer (@6)			O	5	
H2-2-8	08057SW-1111	Washer			O	5	
H2-2-9	01029BR-A001	Bearing(6004zz)			O	3	
H2-2-10	14058CW-A001	Bearing Stopper Collar				3	
H2-2-11	04012AF-A001	Screw(15/64-28)				8	
H2-2-12	GP-007517-00	Y-Driving Shaft "C" UH1506D				2	
	03100800UH60	Y-Driving Shaft "C" UH1208D				2	
H2-2-13	GP-007516-00	Y-Driving Shaft "B" UH1506D				2	
	GP-004159-00	Y-Driving Shaft UH1208D	Aug,24,04 ~ Apr,26,05	X		2	
	GP-004159-01		Apr,27,05 ~	△		2	
H2-2-14	03003800B000	Coupling				4	
H2-2-15	08091SC-7113	Hex. Socket Bolt (M6*L20)			O	16	
H2-2-16	03200200B000	Lower Shaft Timing Pulley				1	
H2-2-17	14061AF-4517	Hex. Socket Bolt (M8*L8)			O	2	
H2-2-18	BE-000023-00	Y-Driving Timing Belt				1	
H2-2-19	GP-007515-00	Y-Driving Box Driven Shaft				2	
H2-2-20	03005100U000	Coupling "A"				4	
H2-2-21	GP-005380-00	Coupling				1	
H2-2-22	GP-044367-00	Y-Driving Timing Pulley	Dec,02,08 ~	X		1	
	GP-044367-01		Jul,05,10 ~	△		1	
H2-2-23	GP-005379-00	Tension Adjusting Roller				1	
H2-2-24	03200400I000	Roller Bearing				2	
H2-2-25	GP-005378-00	Idler Bush				1	
H2-2-26	03200700I000	C-Ring				1	
H2-2-27	14060AF-4517	Hex. Socket Bolt (M6*L6)			O	1	
H2-2-28	GP-007512-00	Idler Shaft	Feb,05,05 ~ Dec,17,08	X		1	
	GP-007512-01		Dec,18,08 ~	△		1	
H2-2-29	GP-007513-00	Y-Driving Box Bracket				2	
H2-2-30	03003SC-4113	Hex. Socket Bolt "B"(M8*L35)			O	8	
H2-2-31	15095SW-3115	Spring Washer (@8)			O	8	
H2-2-32	04029SW-A001	Stud Bolt Washer(S) (@8)			O	8	
H2-2-33	GP-005374-00	Y-Driving Box CoverA				2	
H2-2-34	AS-002867-00	Y-Driving Box Assy	May,17,05 ~	X		2	

H2-3

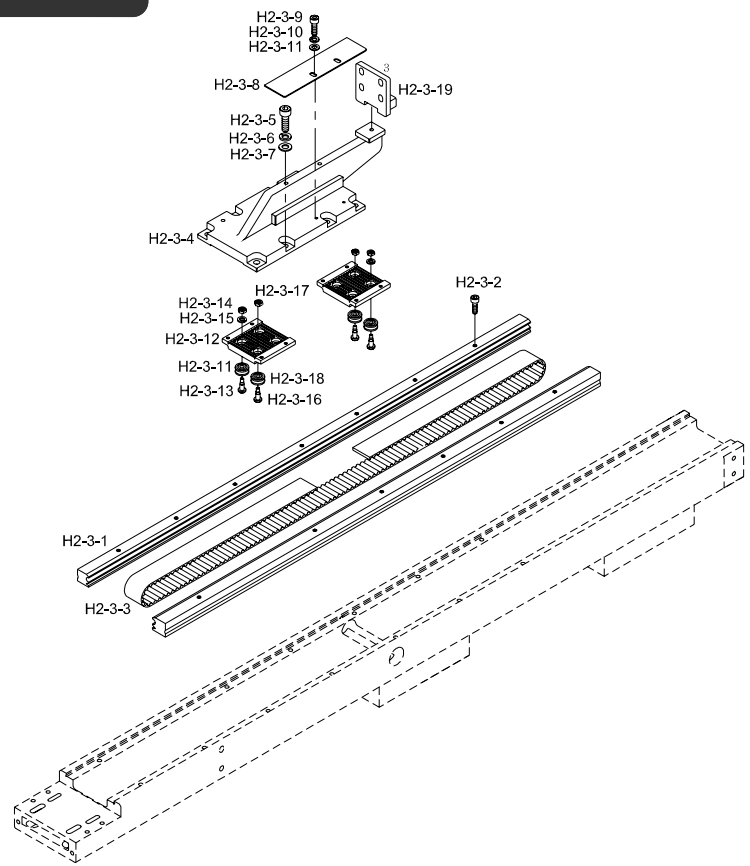

Note

Ref.No	Part No.	Part Name	Application date	Interchangeability	Hardware	Q'ty	Remarks
H2-3-1	03100100UH01	Cam Roller Guide Rail (L590)				8	
H2-3-2	04016MC-4113	CAM ROLLER GUIDE FIXED SCREW				56	
H2-3-3	03100400UH81	Y-Driving Timing Belt				4	
H2-3-4	GP-005021-00	Bracket For X-Y Connecting				4	
H2-3-5	07016SC-7113	Hex.Socket Bolt (M4*L12)			O	32	
H2-3-6	18014SW-3115	Spring Washer (@4-No2)			O	32	
H2-3-7	18015SW-3111	Washer (@4-L)			O	32	
H2-3-8	03101400UH00	Plate For Y-Sensing				2	
H2-3-9	22006SC-7113	Hex. Socket Bolt (M3*L8)			O	4	
H2-3-10	11019SW-9115	Spring Washer (3@)			O	4	
H2-3-11	08011SW-1111	Spring Washer (@3-S)			O	4	
H2-3-12	16104CL-H001	Belt Catcher Plate (Y)				8	
H2-3-13	02028SW-9115	Cam Roller Stud (A)				16	
H2-3-14	15029SN-3211	Hex. Nut (M4-No2)			O	16	
H2-3-15	02028SW-9115	Spring Washer (@4)			O	16	
H2-3-16	15003CW-B001	Cam Roller Stud (B)				16	
H2-3-17	12010SN-1211	Hex.Nut (M5)			O	16	
H2-3-18	15001BR-B001	Cam Roller Bearing				32	

H2-4

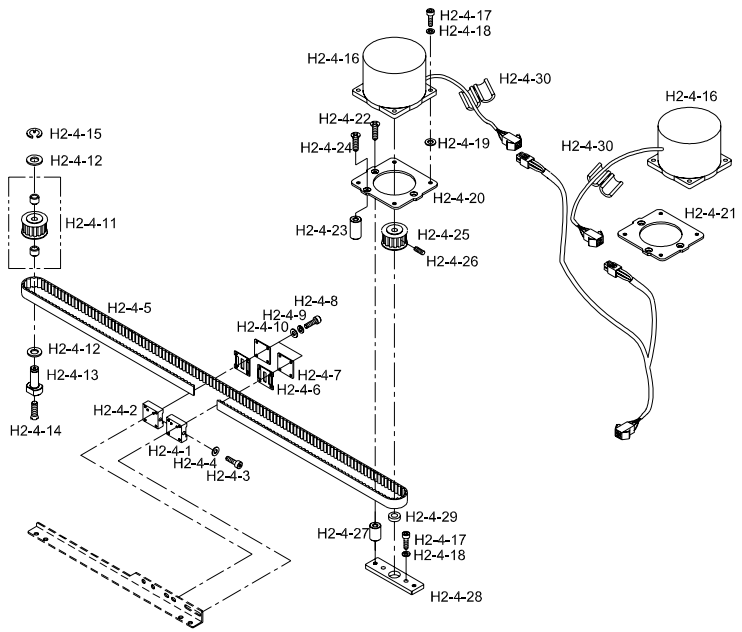

Note

Ref.No	Part No.	Part Name	Application date	Interchangeability	Hardware	Q'ty	Remarks
H2-4-1	14045AD-UK01	Belt Bracket (B)				1	
H2-4-2	14049AD-UK01	Belt Bracket (C)				1	
H2-4-3	15034SC-4113	Hex. Socket Bolt (M4*L45)			O	2	
H2-4-4	18015SW-3111	Washer (4@)			O	2	
H2-4-5	12048BT-T121	X-Axis Timing Belt				2	
H2-4-6	14051PR-UK01	Fixing Plate				4	
H2-4-7	14052PR-UK01	Fixing Plate Holder				4	
H2-4-8	03071SC-7113	HEX. SOCKET BOLT (M3*L10)			O	16	
H2-4-9	18014SW-3115	Spring Washer (@4-No2)			O	12	
H2-4-10	18015SW-3111	Washer (4@)			O	12	
H2-4-11	12017PU-T121	Timing Pulley "A"				2	
	12018BR-T121	Needle Bearing Hk1010(Ina)				4	
H2-4-12	12019BR-T121	Fiber Washer R-Tw1020				4	
H2-4-13	03106000U000	Timing Pulley Driving Pin				2	
H2-4-14	03071SC-7113	HEX. SOCKET BOLT (M3*L10)			O	4	
H2-4-15	08044SR-4013	E-Ring (@8)			O	4	
H2-4-16	15076AF-UK01	X-Motor (103H8221-5044)				2	
H2-4-17	08076SC-7113	Hex. Socket Bolt (M5*L12)			O	12	
H2-4-18	18048SW-3115	Spring Washer (@5)			O	12	
H2-4-19	15061PR-UK01	Motor Space (@5*@11*2T)				8	
H2-4-20	14075PR-UK01	Motor Base (R)				1	
H2-4-21	14074PR-UK01	Motor Base (L)				1	
H2-4-22	15053SC-4119	Plus Screw (M5*L30)			O	4	
H2-4-23	14067AD-UK01	Motor Fixing Shaft (B)				2	
H2-4-24	15055SC-4119	Plus Screw (M5*L35)			O	2	
H2-4-25	14063PU-UK01	Timing Pulley "B"				2	
H2-4-26	04014SC-4517	Hex.Socket Set Screw(M5*L5)			O	4	
H2-4-27	14065AD-UK01	Motor Fixing Shaft (A)				4	
H2-4-28	14069AD-UK01	Motor Block				2	
H2-4-29	14071BR-UK01	Bearing Bc616Zz			O	2	
H2-4-30	15044EL-T121	Bid (S)				2	

H2-5

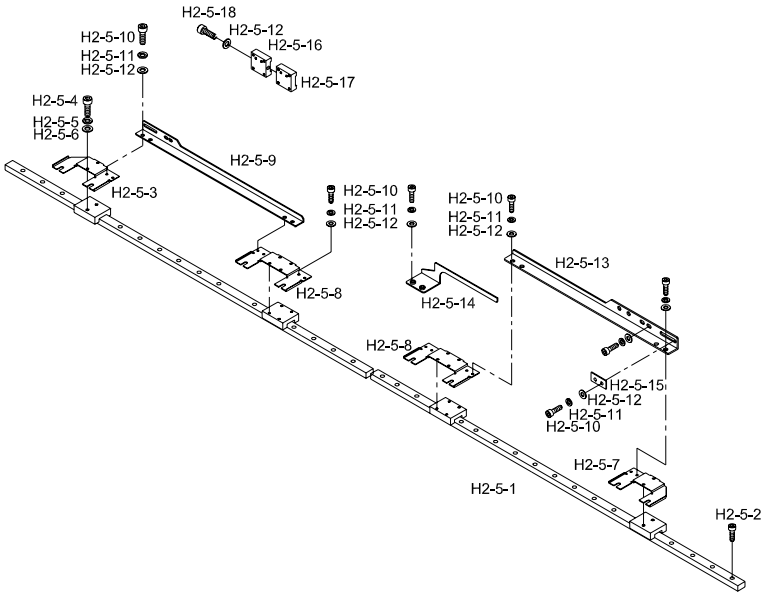

Note

Ref.No	Part No.	Part Name	Application date	Interchangeability	Hardware	Q'ty	Remarks
H2-5-1	GP-007523-00	X-Axis L/M Guide				2	
H2-5-2	22006SC-7113	Hex. Socket Bolt (M3*L8)			O	62	
H2-5-3	15007PR-UK02	Connecting Plate(L)				1	
H2-5-4	02015SC-7113	Hex.Socket Bolt(M4*L10)			O	12	
H2-5-5	18014SW-3115	Spring Washer (@4-No2)			O	12	
H2-5-6	18015SW-3111	Washer (4@)			O	12	
H2-5-7	GP-007520-00	Connecting Plate(R)				1	
H2-5-8	15015PR-UK02	Connecting Plate				2	
H2-5-9	GP-007519-00	L/M Block Connecting Plate (L)				1	
H2-5-10	02023SC-7113	Hex. Socket Bolt (M4*L8)			O	32	
H2-5-11	18014SW-3115	Spring Washer (@4-No2)			O	26	
H2-5-12	18015SW-3111	Washer (4@)			O	26	
H2-5-13	03200900UK40	L/M Block Connecting Plate (R)				1	
H2-5-14	GP-008796-00	Perception Plate	Apr,25,05 ~ Apr,23,07	X		1	
	GP-008796-01		Apr,24,07 ~	△		1	
H2-5-15	14020PR-UK01	Space				2	
H2-5-16	14045AD-UK01	Belt Bracket (B)				1	
H2-5-17	14048AD-UK01	Belt Bracket (A)				1	
H2-5-18	15034SC-4113	Hex. Socket Bolt (M4*L45)			O	2	

H2-6

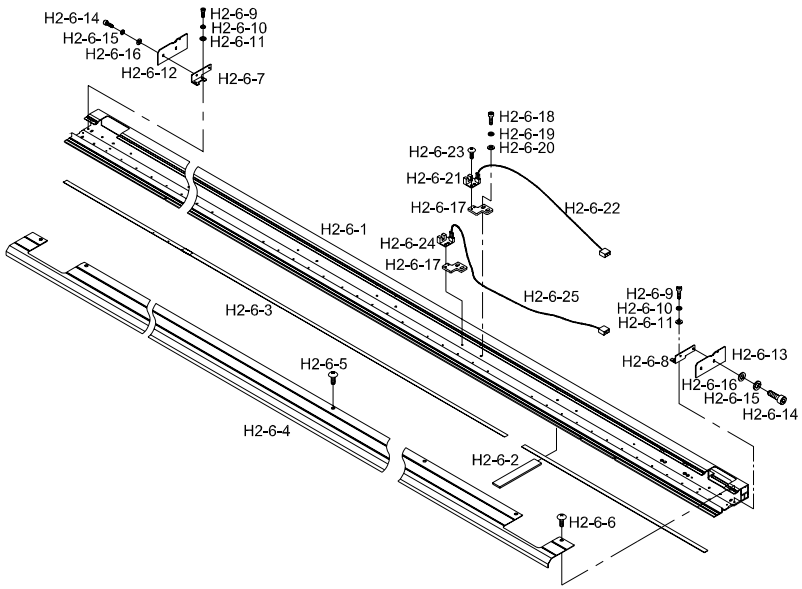

Note

Ref.No	Part No.	Part Name	Application date	Interchangeability	Hardware	Q'ty	Remarks
H2-6-1	GP-007518-00	X-LM GUIDE FRAME L2635	Feb,05,05 ~ Jun,01,05	X		1	
	GP-007518-01		Jun,02,05 ~ Oct,18,06	△		1	
	GP-007518-02		Oct,19,06 ~	△		1	
H2-6-2	03201800UH00	Felt (190*30*1.5T)				4	
H2-6-3	GP-008793-00	Tubular Frame Rail Plate				1	
H2-6-4	GP-007525-00	X-Cover				1	
H2-6-5	15042SC-3123	Truss Screw (M4*L6)			O	12	
H2-6-6	18153SC-3123	Plus Screw (M4*L10)			O	2	
H2-6-7	GP-005104-00	X-FRAME SIDE COVER HOLDER (L)				1	
H2-6-8	GP-005105-00	X-FRAME SIDE COVER HOLDER (R)				1	
H2-6-9	02023SC-7113	Hex. Socket Bolt (M4*L8)			O	8	
H2-6-10	18014SW-3115	Spring Washer (@4-No2)			O	8	
H2-6-11	05009SW-1111	Washer (@4-L)			O	8	
H2-6-12	GP-005106-00	X-AXIS FRAME SIDE COVER (L)				1	
H2-6-13	GP-005107-00	X-AXIS FRAME SIDE COVER (R)				1	
H2-6-14	15042SC-3123	Truss Screw (M4*L6)			O	4	
H2-6-15	18015SW-3111	WASHER (4@)			O	2	
H2-6-16	18014SW-3115	SPRING WASHER (@4-NO2)			O	2	
H2-6-17	15067PR-UK01	Sensor Plate				2	
H2-6-18	02015SC-7113	HEX.SOCKET BOLT(M4*L10)			O	4	
H2-6-19	18014SW-3115	Spring Washer (@4-No2)			O	4	
H2-6-20	18015SW-3111	Washer (4@)			O	4	
H2-6-21	03201600UH00	X-Positioning Sensor				1	
H2-6-22	25052EL-UK01	LAST-SENSOR (BLACK) 4HT-52				1	
H2-6-23	03006MC-8118	PLUS SCREW (M3*L6)			O	4	
H2-6-24	03201700UH00	X-Positioning Sensor				1	
H2-6-25	03201900UH00	X-Frame Screw Bush				4	

X-Y Drive (UH1508D-45)

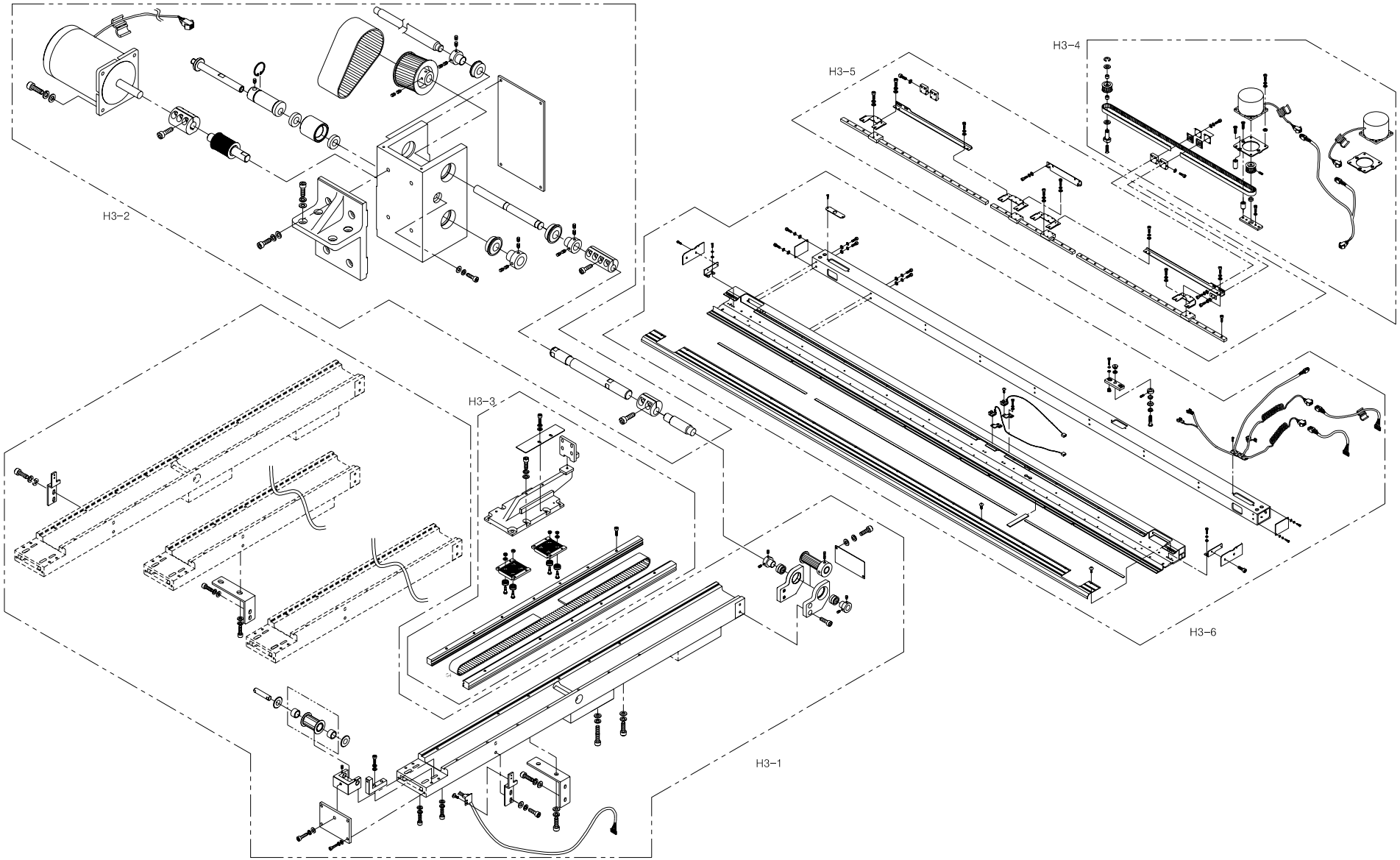

H3-1

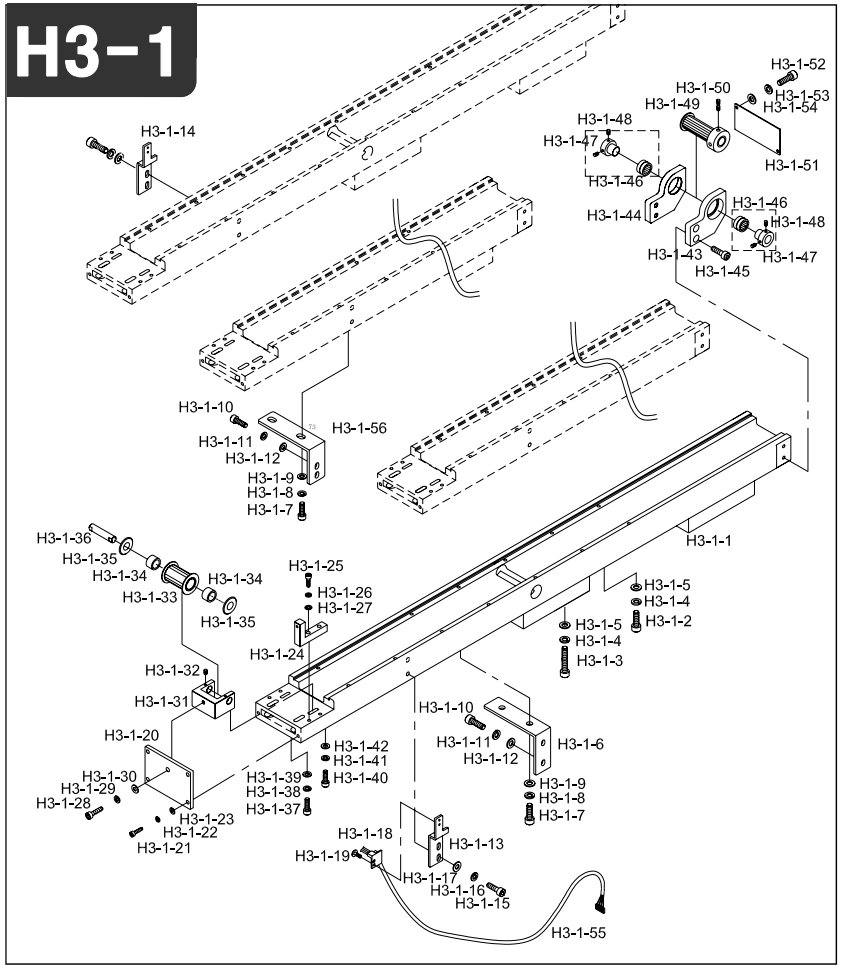

Note

Ref.No	Part No.	Part Name	Application date	Interchangeability	Hardware	Q'ty	Remarks
H3-1-1	03003000UH60	Y-LM Guide Frame L620				4	
H3-1-2	14027SC-4113	Hex. Socket Bolt				16	
H3-1-3	03003SC-4113	Hex. Socket Bolt "B"(M8*L35)			O	12	
H3-1-4	15095SW-3115	Spring Washer (@8)			O	28	
H3-1-5	04029SW-A001	Stud Bolt Washer(S) (@8)			O	28	
H3-1-6	16074PR-UK06	Y-Lm Support Fixing Plate				2	
H3-1-7	14006SC-7113	Hex.Socket Bolt (M8*L15)			O	8	
H3-1-8	15095SW-3115	Spring Washer (@6)			O	8	
H3-1-9	08041SW-1111	Washer (@6)			O	8	
H3-1-10	08076SC-7113	Hex. Socket Bolt (M5*L15)			O	8	
H3-1-11	18048SW-3115	Spring Washer (@5)			O	8	
H3-1-12	16018SW-1111	Washer (@5)			O	8	
H3-1-13	03101300UH00	Bracket for Y-Sensor				2	
H3-1-14	03101300UH00	Bracket for Y-Sensor				2	
H3-1-15	02015SC-7113	Hex.Socket Bolt(M4*L10)			O	4	
H3-1-16	02028SW-9115	Spring Washer (@4)			O	4	
H3-1-17	05009SW-1111	Washer (@4-L)			O	4	
H3-1-18	09018EL-UK01	Sensor				2	
H3-1-19	08006SC-8118	Plus Screw (M3*L5)			O	4	
H3-1-20	03100600UH00	Tension Adjusting Plate				4	
H3-1-21	07016SC-7113	Hex.Socket Bolt (M4*L12)			O	8	
H3-1-22	18014SW-3115	Spring Washer (@4-No2)			O	8	
H3-1-23	18015SW-3111	Washer (4@)			O	16	
H3-1-24	03100700UH00	Fixed Block				4	
H3-1-25	11029SC-4113	Hex. Socket Bolt (M4*L20)			O	4	
H3-1-26	18014SW-3115	Spring Washer (@4-No2)			O	4	
H3-1-27	18015SW-3111	Washer (4@)			O	4	
H3-1-28	16028SC-7113	Hex. Socket Bolt (M5*L25)			O	4	
H3-1-29	18048SW-3115	Spring Washer (@5)			O	4	
H3-1-30	16018SW-1111	Washer (@5)			O	4	
H3-1-31	03100500UH00	Y-Tension Adjusting Bracket				4	
H3-1-32	08007SC-4517	Hex. Socket Set Screw (M3*L5)			O	8	
H3-1-33	03003400UH60	Y-Drive Timing Pulley				4	
H3-1-34	12018BR-T121	Needle Bearing Hk1010(Ina)				8	
H3-1-35	12019BR-T121	Fiber Washer R-Tw1020				8	
H3-1-36	16100CW-UK06	Timing Pulley Shaft (Y)				4	
H3-1-37	08062SC-7113	Hex. Socket Bolt (M5*L20)			O	8	

H3-1

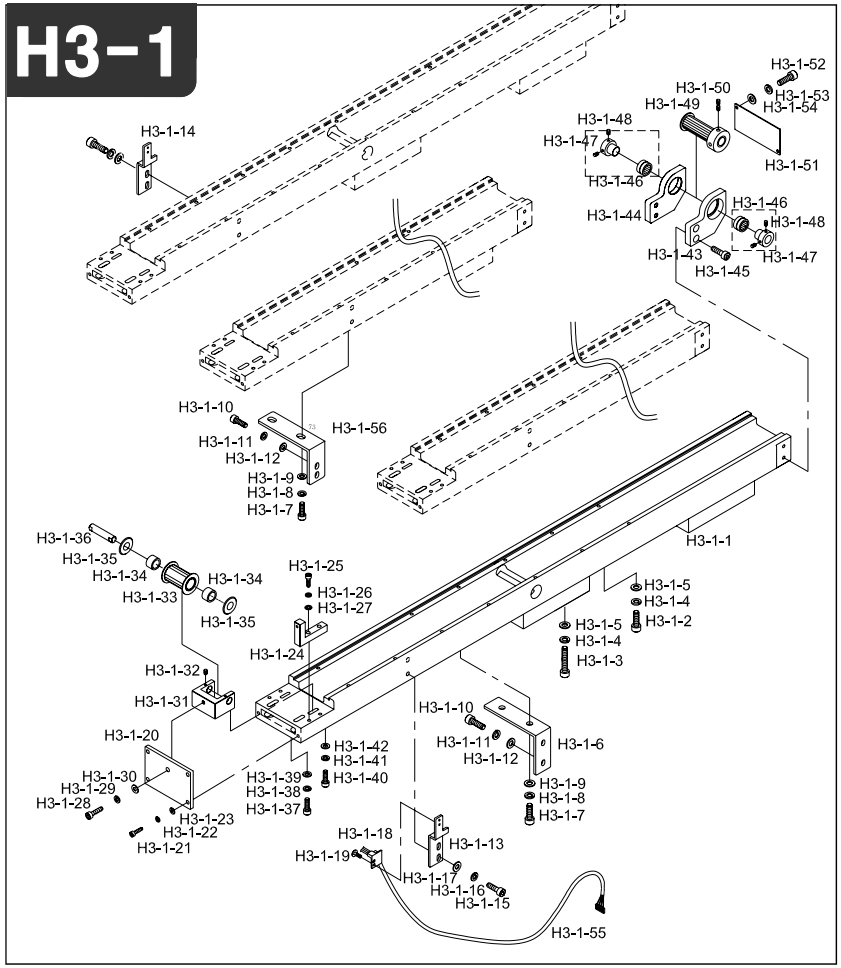

Note

Ref.No	Part No.	Part Name	Application date	Interchangeability	Hardware	Q'ty	Remarks
H3-1-38	18048SW-3115	Spring Washer (@5)			O	8	
H3-1-39	16018SW-1111	Washer (@5)			O	8	
H3-1-40	03016SC-4113	Hex. Socket Bolt (M5*L15)			O	4	
H3-1-41	18014SW-3115	Spring Washer (@4-No2)			O	4	
H3-1-42	18015SW-3111	Washer (4@)			O	4	
H3-1-43	GP-007144-00	Y-Bearing Bracket (R)				4	
H3-1-44	GP-007145-00	Y-Bearing Bracket (L)				4	
H3-1-45	16059SC-7113	Hex. Socket Bolt (M6*L20)			O	16	
H3-1-46	13026BR-T121	Needle Bearing (6002Z)			O	4	
H3-1-47	03002700T000	Bearing Collar				8	
H3-1-48	03037AF-A001	Driver Screw				16	
H3-1-49	04001000 E000	Y-Drive Timing Pulley				4	
H3-1-50	04014SC-4517	Hex.Socket Set Screw(M5*L5)			O	16	
H3-1-51	03101100UH00	Y-Bearing Bracket Cover				4	
H3-1-52	07035SC-7113	Bracket Screw (M3*L6)			O	16	
H3-1-53	11019SW-9115	Spring Washer (3@)			O	16	
H3-1-54	08011SW-1111	Spring Washer (@3-S)			O	16	
H3-1-55	TTS-42-01	Y-ORIGIN IN Connecting Cable				1	
H3-1-56	GP-004150-00	Y-LM Support Fixing Plate(A)				2	

H3-2

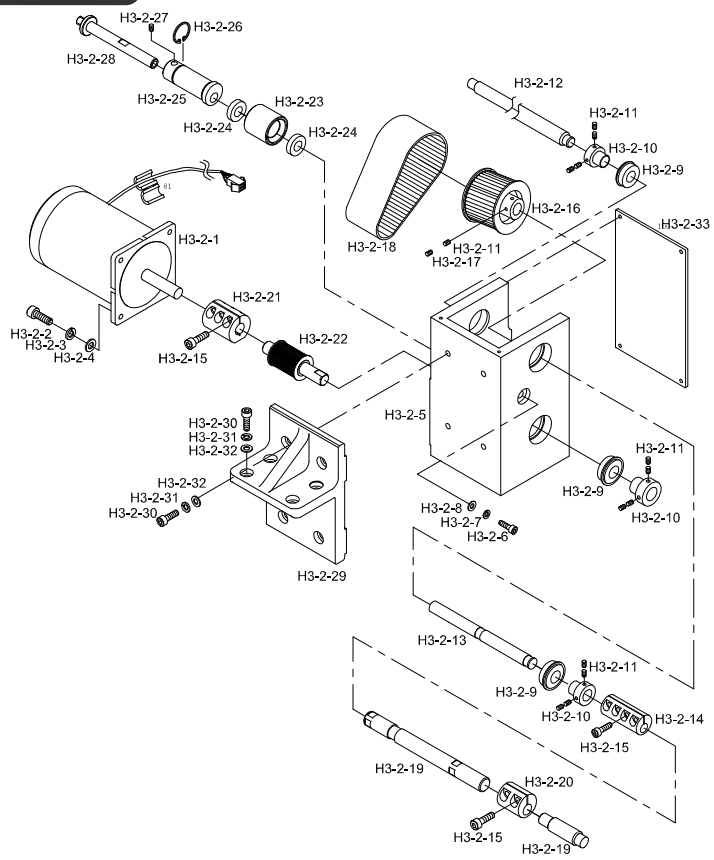

Note

Ref.No	Part No.	Part Name	Application date	Interchangeability	Hardware	Q'ty	Remarks
H3-2-1	16059MT-E131	Y Motor (103H89222-5212)				2	
H3-2-2	14046SC-7113	Hex.Socket Bolt (M6*L30)			O	8	
H3-2-3	16014SW-4115	Spring Washer (@6)			O	8	
H3-2-4	08057SW-1111	Washer (@6)			O	8	
H3-2-5	GP-007511-00	Y-Driving Box				1	
H3-2-6	14002SC-7113	Hex. Socket Bolt (M6*L15)			O	1	
H3-2-7	16014SW-4115	Spring Washer (@6)			O	5	
H3-2-8	08057SW-1111	Washer			O	5	
H3-2-9	01029BR-A001	Bearing(6004zz)				3	
H3-2-10	14058CW-A001	Bearing Stopper Collar				3	
H3-2-11	04012AF-A001	Screw(15/64-28)				8	
H3-2-12	GP-007517-00	Y-Driving Shaft "C"				2	
	03100800UH60	Y-Driving Shaft "C" UH1208D				2	
H3-2-13	GP-007516-00	Y-Driving Shaft "B"				2	
	GP-004159-00	Y-Driving Shaft	Aug,24,04 ~ Apr,26,05	X		2	
	GP-004159-01		Apr,27,05 ~	△		2	
H3-2-14	03003800B000	Coupling				4	
H3-2-15	08091SC-7113	Hex. Socket Bolt (M6*L20)			O	16	
H3-2-16	03200200B000	Lower Shaft Timing Pulley				1	
H3-2-17	14061AF-4517	Hex. Socket Bolt (M8*L8)			O	2	
H3-2-18	BE-000023-00	Y-Driving Timing Belt				1	
H3-2-19	GP-007515-00	Y-Driving Box Driven Shaft				2	
H3-2-20	03005100U000	Coupling "A"				4	
H3-2-21	GP-005380-00	Coupling				1	
H3-2-22	GP-044367-00	Y-Driving Timing Pulley	Dec,02,08 ~	X		1	
	GP-044367-01		Jul,05,10 ~	△		1	
H3-2-23	GP-005379-00	Tension Adjusting Roller				1	
H3-2-24	03200400I000	Roller Bearing			O	2	
H3-2-25	GP-005378-00	Idler Bush				1	
H3-2-26	03200700I000	C-Ring			O	1	
H3-2-27	14060AF-4517	Hex. Socket Bolt (M6*L6)			O	1	
H3-2-28	GP-007512-00	Idler Shaft	Feb,05,05 ~ Dec,17,08	X		1	
	GP-007512-01		Dec,18,08	△		1	
H3-2-29	GP-007513-00	Y-Driving Box Bracket				2	
H3-2-30	03003SC-4113	Hex. Socket Bolt "B"(M8*L35)			O	8	
H3-2-31	15095SW-3115	Spring Washer (@8)			O	8	
H3-2-32	04029SW-A001	Stud Bolt Washer(S) (@8)			O	8	
H3-2-33	GP-005374-00	Y-Driving Box CoverA				2	

H3-3

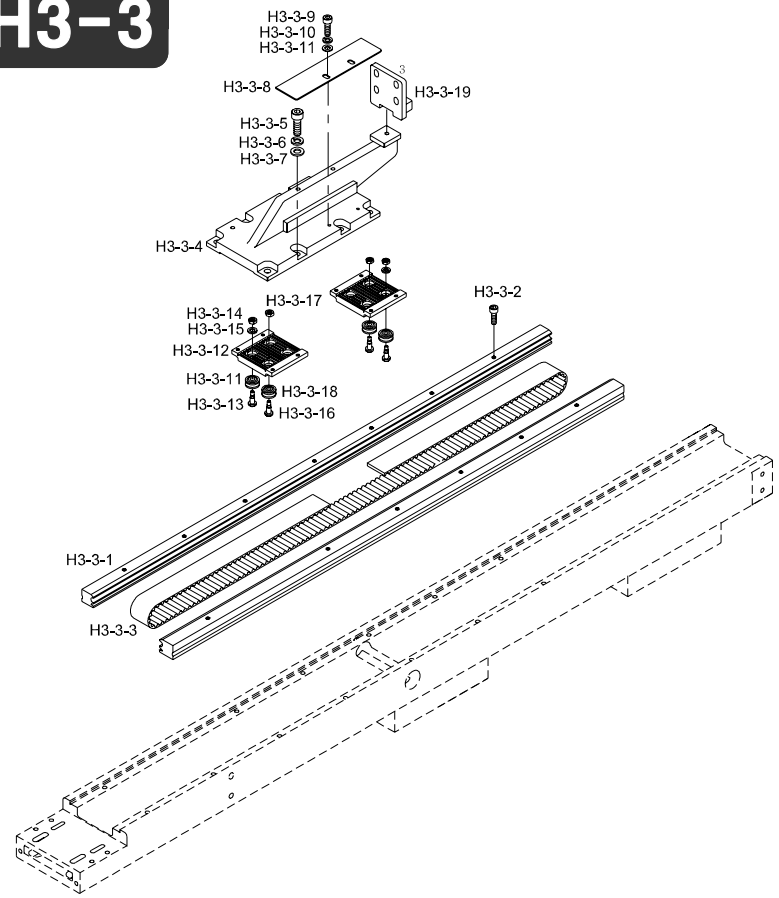

Note

Ref.No	Part No.	Part Name	Application date	Interchangeability	Hardware	Q'ty	Remarks
H3-3-1	03100100UH01	Cam Roller Guide Rail (L590)				8	
H3-3-2	04016MC-4113	CAM ROLLER GUIDE FIXED SCREW				56	
H3-3-3	03100400UH81	Y-Driving Timing Belt				4	
H3-3-4	GP-005021-00	Bracket For X-Y Connecting				4	
H3-3-5	07016SC-7113	Hex.Socket Bolt (M4*L12)			O	32	
H3-3-6	18014SW-3115	Spring Washer (@4-No2)			O	32	
H3-3-7	18015SW-3111	Washer (@4-L)			O	32	
H3-3-8	03101400UH00	Plate For Y-Sensing				2	
H3-3-9	22006SC-7113	Hex. Socket Bolt (M3*L8)			O	4	
H3-3-10	11019SW-9115	Spring Washer (3@)			O	4	
H3-3-11	08011SW-1111	Spring Washer (@3-S)			O	4	
H3-3-12	16104CL-H001	Belt Catcher Plate (Y)				8	
H3-3-13	02028SW-9115	Cam Roller Stud (A)				16	
H3-3-14	15029SN-3211	Hex. Nut (M4-No2)			O	16	
H3-3-15	02028SW-9115	Spring Washer (@4)			O	16	
H3-3-16	15003CW-B001	Cam Roller Stud (B)				16	
H3-3-17	12010SN-1211	Hex.Nut (M5)			O	16	
H3-3-18	15001BR-B001	Cam Roller Bearing				32	

H3-4

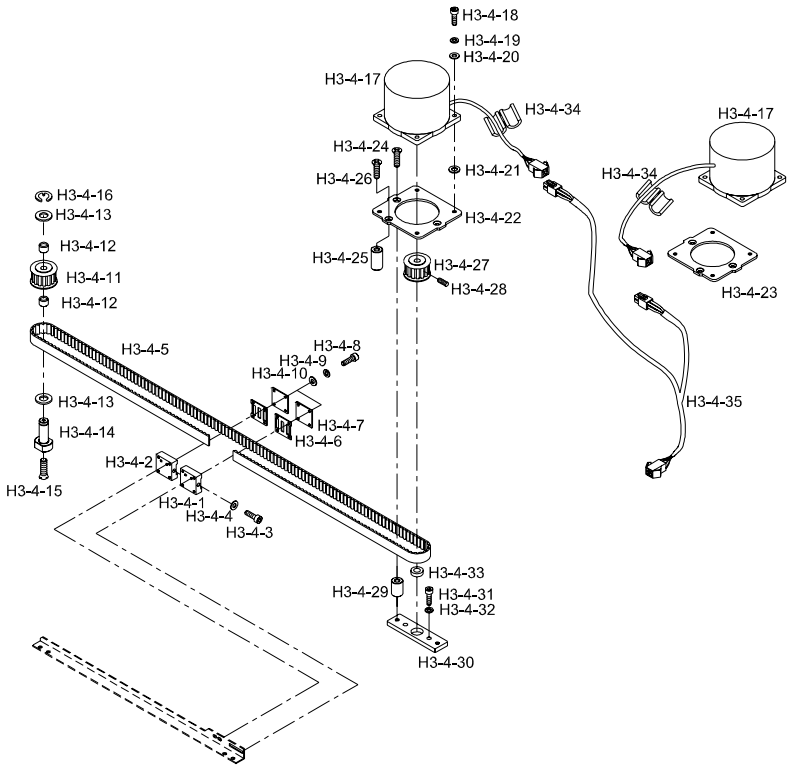

Note

Ref.No	Part No.	Part Name	Application date	Interchangeability	Hardware	Q'ty	Remarks
H3-4-1	14045AD-UK01	BELT BRACKET (B)				2	
H3-4-2	14049AD-UK01	BELT BRACKET (C)				2	
H3-4-3	15034SC-4113	HEX. SOCKET Bolt (M4*L45)			O	2	
H3-4-4	05009SW-1111	WASHER (@4-L)			O	2	
H3-4-5	03201100UH00	X Timing Belt (015-AT5-0299)				4	
H3-4-6	14051PR-UK01	FIXING PLATE				8	
H3-4-7	14052PR-UK01	FIXING PLATE HOLDER				8	
H3-4-8	13020SC-4113	HEX. SOCKET BOLT (M3*L8)			O	32	
H3-4-9	11019SW-9115	SPRING WASHER (3@)			O	32	
H3-4-10	08011SW-1111	SPRING WASHER (@3-S)			O	32	
H3-4-11	12017PU-T121	Timing Pulley "A"				4	
H3-4-12	12018BR-T121	Needle Bearing Hk1010(Ina)				8	
H3-4-13	12019BR-T121	FIBER WASHER R-TW1020				8	
H3-4-14	14060CW-UK01	TIMING PULLEY DRIVING PIN				4	
H3-4-15	15048SC-4119	PLUS SCREW (M5*L12)				4	
H3-4-16	08044SR-4013	E-RING (@8)			O	4	
H3-4-17	15076AF-UK01	X-MOTOR				4	
H3-4-18	08076SC-4113	HEX. SOCKET BOLT (M5*L12)			O	16	
H3-4-19	16019SW-4115	SPRING WASHER (@5)			O	16	
H3-4-20	16018SW-1111	WASHER (@5)			O	16	
H3-4-21	15061PR-UK01	MOTOR SPACE (@5*@11*2T)				16	
H3-4-22	14075PR-UK01	MOTOR BASE (R)				2	
H3-4-23	14074PR-UK01	MOTOR BASE (L)				2	
H3-4-24	15053SC-4119	PLUS SCREW (M5*L30)			O	8	
H3-4-25	14067AD-UK01	MOTOR FIXING SHAFT (B)				4	
H3-4-26	15055SC-4119	PLUS SCREW (M5*L35)			O	4	
H3-4-27	14063PU-UK01	Timing Pulley "B"				4	
H3-4-28	04014SC-4517	HEX.SOCKET SET SCREW(M5*L5)			O	8	
H3-4-29	14065AD-UK01	MOTOR FIXING SHAFT (A)				8	
H3-4-30	14069AD-UK01	Motor Block				4	
H3-4-31	08076SC-4113	HEX. SOCKET BOLT (M5*L12)			O	8	
H3-4-32	16019SW-4115	SPRING WASHER (@5)			O	8	
H3-4-33	14071BR-UK01	Bearing Bc616Zz				4	
H3-4-34	15044EL-T121	Bid (S)				4	
H3-4-35	25014EL-UK01	Cable (4Ht-14)				2	

H3-5

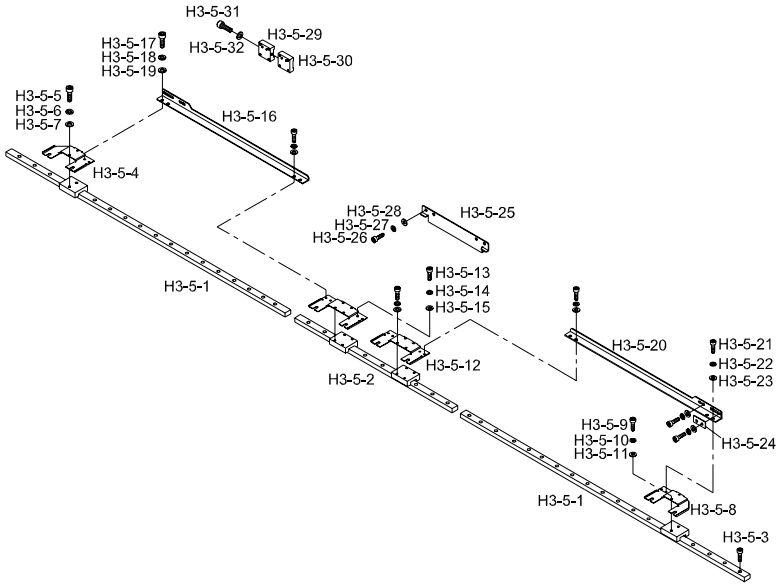

Note

Ref.No	Part No.	Part Name	Application date	Interchangeability	Hardware	Q'ty	Remarks
H3-5-1	GP-004143-00	X-LM RAIL "A" (THK SR15W- L580)				4	
H3-5-2	03200600UH00	X-LM RAIL "B" (THK SR15W- L690)				2	
H3-5-3	22006SC-7113	Hex. Socket Bolt (M3*L8)			O	88	
H3-5-4	15007PR-UK02	CONNECTING PLATE(L)				2	
H3-5-5	02015SC-4113	HEX.SOCKET BOLT(M4*L10)			O	4	
H3-5-6	18014SW-3115	Spring Washer (@4-No2)			O	4	
H3-5-7	18015SW-3111	WASHER (4@)			O	4	
H3-5-8	15011PR-UK02	CONNECTING PLATE(R)				2	
H3-5-9	02015SC-4113	HEX.SOCKET BOLT(M4*L10)			O	4	
H3-5-10	18014SW-3115	SPRING WASHER (@4-NO2)			O	4	
H3-5-11	18015SW-3111	WASHER (4@)			O	4	
H3-5-12	15015PR-UK02	Connecting Plate				8	
H3-5-13	02015SC-4113	HEX.SOCKET BOLT(M4*L10)			O	32	
H3-5-14	18014SW-3115	Spring Washer (@4-No2)			O	32	
H3-5-15	18015SW-3111	WASHER (4@)			O	32	
H3-5-16	GP-004144-00	LM Block Connecting Plate(L) (L=537)				2	
H3-5-17	02004SC-4113	HEX. SOCKET BOLT (M4*L8)			O	8	
H3-5-18	18014SW-3115	SPRING WASHER (@4-NO2)			O	8	
H3-5-19	18015SW-3111	WASHER (4@)			O	8	
H3-5-20	GP-004145-00	LM Block Connecting Plate(R) (L=537)				2	
H3-5-21	02004SC-4113	HEX. SOCKET BOLT (M4*L8)			O	8	
H3-5-22	18014SW-3115	SPRING WASHER (@4-NO2)			O	8	
H3-5-23	18015SW-3111	WASHER (4@)			O	8	
H3-5-24	14020PR-UK01	SPACE				4	
H3-5-25	03201200UH00	X-MOVING SENSOR PLATE				2	
H3-5-26	02004SC-4113	HEX. SOCKET BOLT (M4*L8)			O	4	
H3-5-27	18014SW-3115	SPRING WASHER (@4-NO2)			O	4	
H3-5-28	18015SW-3111	WASHER (4@)			O	4	
H3-5-29	14045AD-UK01	BELT BRACKET (B)				4	
H3-5-30	14048AD-UK01	BELT BRACKET (A)				2	
H3-5-31	15034SC-4113	HEX. SOCKET Bolt (M4*L45)			O	2	
H3-5-32	05009SW-1111	WASHER (@4-L)			O	2	

H3-6

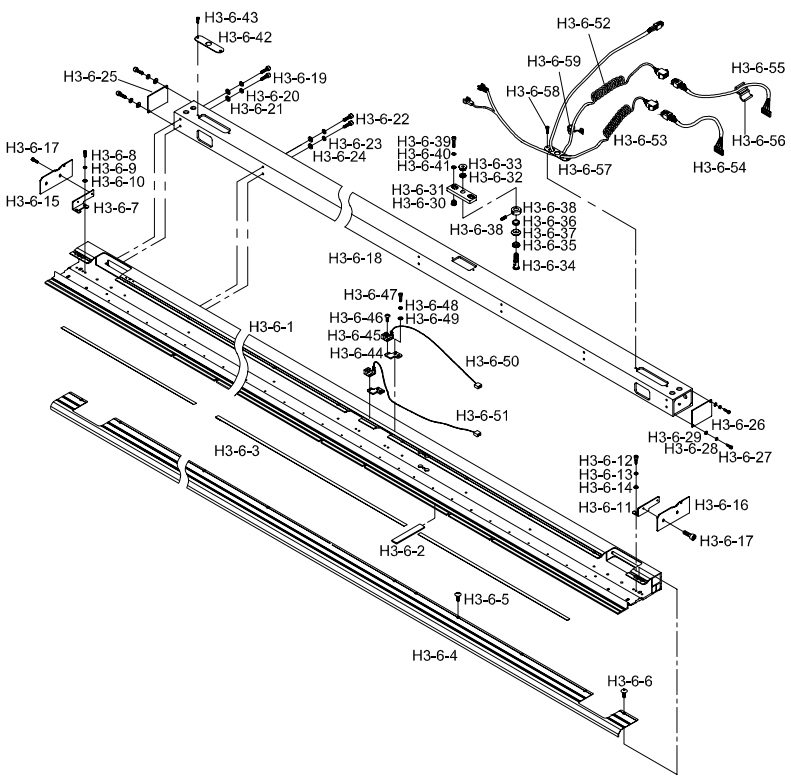

Note

Ref.No	Part No.	Part Name	Application date	Interchangeability	Hardware	Q'ty	Remarks
H3-6-1	GP-004142-00	X-FRAME(L=2135)	Aug,24,04 ~ Apr,26,05	X		2	
	GP-004142-01		Apr,27,05 ~ Jun,01,05	△		2	
	GP-004142-02		Jun,02,05 ~	△		2	
H3-6-2	15062SF-T121	Felt				12	
H3-6-3	03200700UH00	Tubular Frame Rail Plate				1	
H3-6-4	GP-004146-00	X-FRAME COVER				2	
H3-6-5	18153SC-3123	PLUS SCREW (M4*L10)			O	4	
H3-6-6	15042SC-3123	TRUSS SCREW (M4*L6)			O	32	
H3-6-7	GP-005104-00	X-Frame Side Cover Holder (L)				2	
H3-6-8	02004SC-4113	HEX. SOCKET BOLT (M4*L8)			O	8	
H3-6-9	18014SW-3115	SPRING WASHER (@4-NO2)			O	8	
H3-6-10	18015SW-3111	WASHER (4@)			O	8	
H3-6-11	GP-005105-00	X-Frame Side Cover Holder (R)				2	
H3-6-12	02004SC-4113	HEX. SOCKET BOLT (M4*L8)			O	8	
H3-6-13	18014SW-3115	SPRING WASHER (@4-NO2)			O	8	
H3-6-14	18015SW-3111	WASHER (4@)			O	8	
H3-6-15	GP-005106-00	X-FRAME SIDE COVER L				2	
H3-6-16	GP-005107-00	X-FRAME SIDE COVER R				2	
H3-6-17	15042SC-3123	TRUSS SCREW (M4*L6)			O	8	
H3-6-18	GP-004272-00	X-FRAME SUPPORT BAR	Aug,26,04 ~ Dec,01,04	X		2	
	GP-004272-01		Dec,02,04 ~	△		2	
H3-6-19	18047SC-7113	HEX. SOCKET BOLT (M5*L15)			O	4	
H3-6-20	18048SW-3115	SPRING WASHER (5@)			O	4	
H3-6-21	18049SW-3111	WASHER (@5)			O	4	
H3-6-22	07016SC-4113	HEX. SOCKET BOLT (M4*L12)			O	36	
H3-6-23	18014SW-3115	SPRING WASHER (@4-NO2)			O	36	
H3-6-24	18015SW-3111	WASHER (4@)			O	36	
H3-6-25	GP-005108-00	X-Frame Support Bar Cover L				2	
H3-6-26	GP-005109-00	X-Frame Support Bar Cover R				2	
H3-6-27	15112SC-7113	HEX. SOCKET SET SCREW(M3*L8)			O	8	
H3-6-28	11019SW-9115	SPRING WASHER (3@)			O	8	
H3-6-29	06011SW-2111	WASHER (@3)			O	8	
H3-6-30	03201900UH00	X-FRAME SCREW BUSH				8	
H3-6-31	03101700UH00	Roller Fixed Plate				4	
H3-6-32	15095SW-3115	Spring Washer (@8)			O	4	
H3-6-33	04032SN-A001	Hex. Nut (M8-No2)			O	4	
H3-6-34	15104CW-UK01	Roller Stud Bolt				4	

H3-6

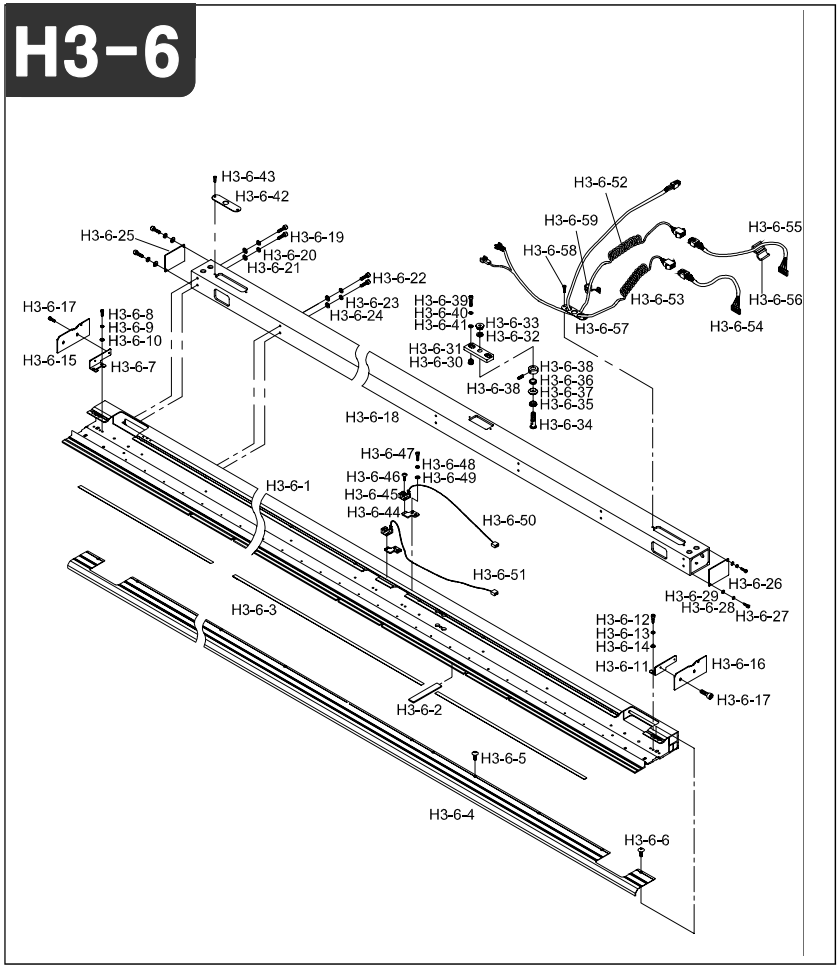

Note

Ref.No	Part No.	Part Name	Application date	Interchangeability	Hardware	Q'ty	Remarks
H3-6-35	15106BR-A001	Flange Bearing (1280Zz)				8	
H3-6-36	15130AF-A001	Roller Guide				4	
H3-6-37	15107CW-UK01	Roller Collar				4	
H3-6-38	03022SC-4517	Hex. Socket Set Screw(M4*L5)			O	8	
H3-6-39	07016SC-7113	HEX.SOCKET BOLT (M4*L12)			O	8	
H3-6-40	18014SW-3115	Spring Washer (@4-No2)			O	8	
H3-6-41	18015SW-3111	Washer (4@)			O	8	
H3-6-42	15082PR-W121	FIXING PLATE FOR BUSHING				2	
H3-6-43	02023SC-7113	HEX.SOCKET BOLT (M4*L8)			O	8	
H3-6-44	15067PR-UK01	SENSOR PLATE				4	
H3-6-45	03201600UH00	X-POSITIONING SENSOR				4	
H3-6-46	06010AF-8118	PLUS SCREW(M3*L4)			O	8	
H3-6-47	02004SC-4113	HEX. SOCKET BOLT (M4*L8)			O	8	
H3-6-48	18014SW-3115	Spring Washer (@4-No2)			O	8	
H3-6-49	18015SW-3111	Washer (4@)			O	8	
H3-6-50	25052EL-UK01	LAST-SENSOR (BLACK) 4HT-52				2	
H3-6-51	25053EL-UK01	LAST-SENSOR (WHITE) 4HT-53				2	
H3-6-52	25019EL-T121	Power Cable 2 (1Ht-19)				2	
H3-6-53	25038EL-UK06	Cable (25-38)				2	
H3-6-54	25041EL-UK01	X Original In (4Ht-41)				2	
H3-6-55	02101300U040	Cable (Sh-13-1)				2	
H3-6-56	15045EL-UK01	Bid (L)				2	
H3-6-57	15087PR-UK02	CABLE PLATE FOR BUSHING				2	
H3-6-58	02010SC-3123	TRUSS SCREW (M4*L8)			O	4	
H3-6-59	23019EL-A001	CODE Push (6NR-16)				8	

X-Y Drive (UH1512D-45)

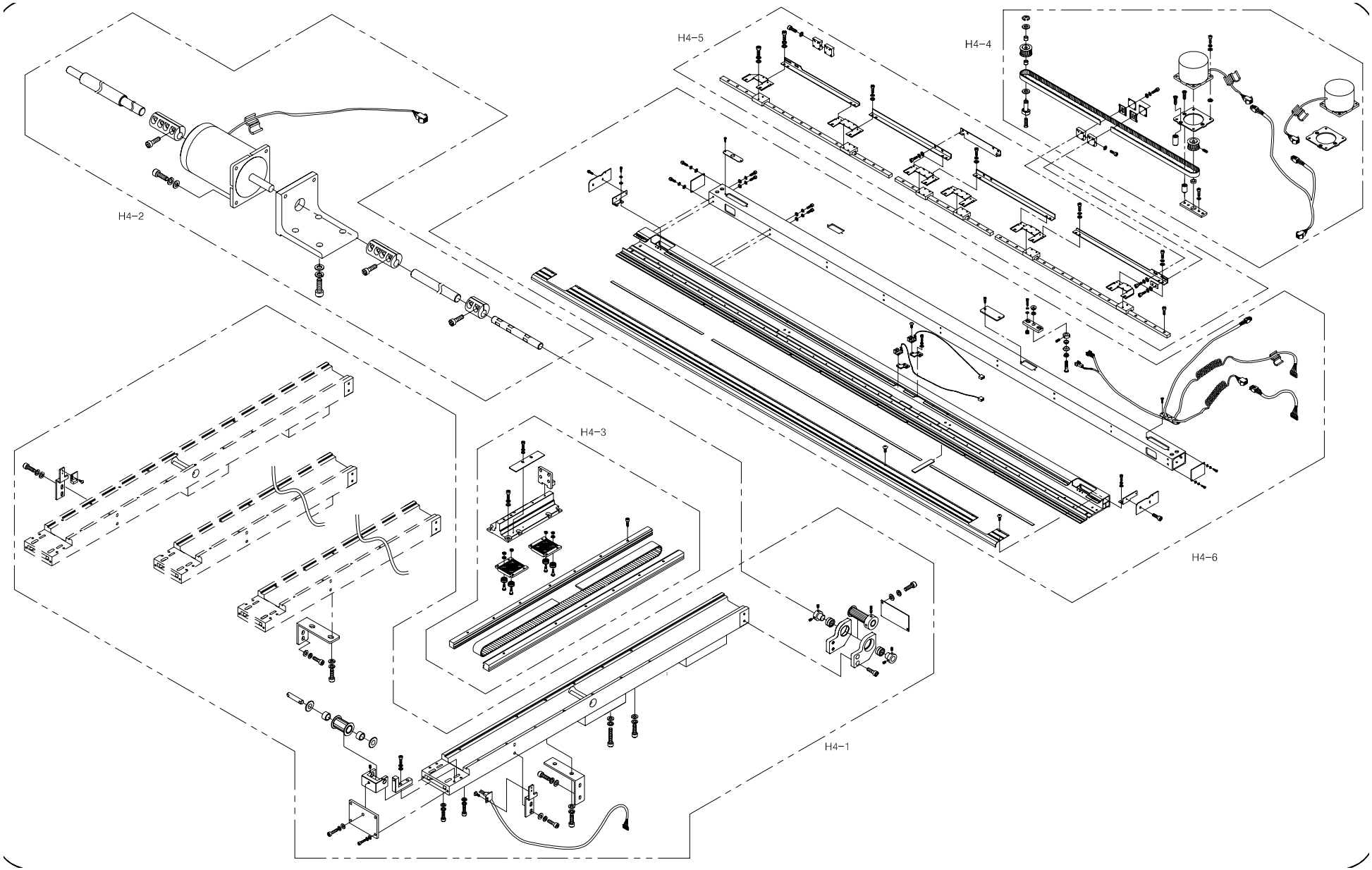

H4-1

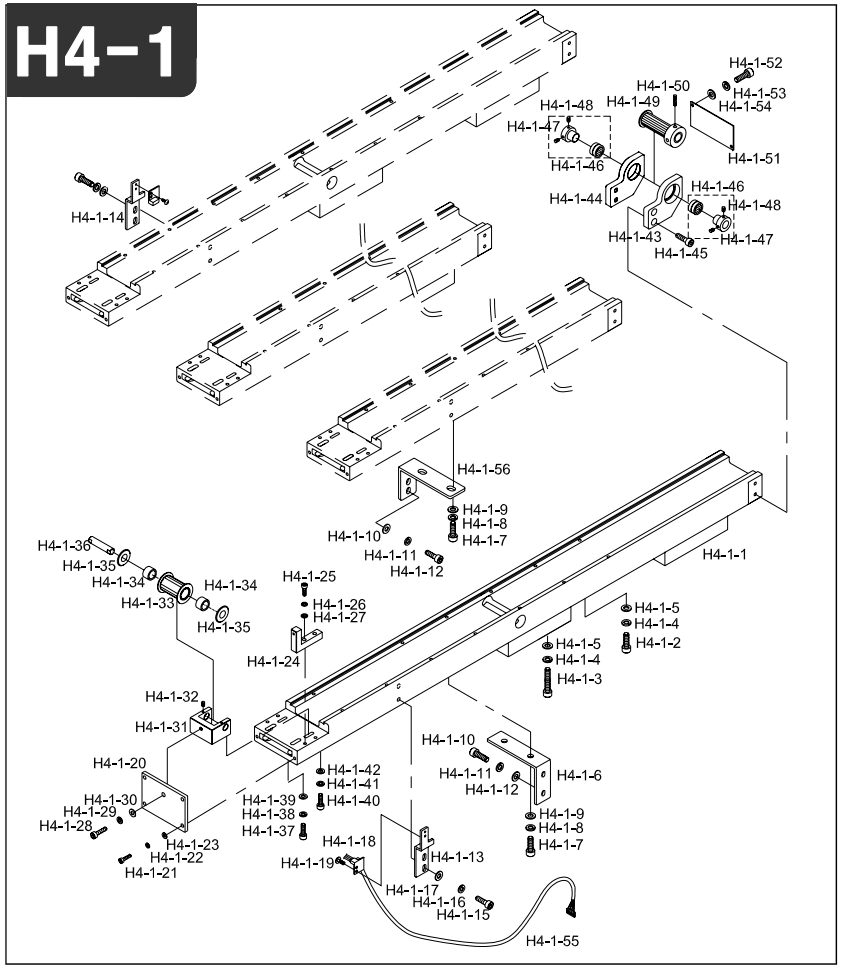

Note

Ref.No	Part No.	Part Name	Application date	Interchangeability	Hardware	Q'ty	Remarks
H4-1-1	GP-004148-00	Y-LM Guide Frame L620	Aug,24,04 ~ Mar,18,08	X		4	
	GP-004148-01		Mar,19,08 ~	△		4	
H4-1-2	02033SC-4113	Hex. Socket Bolt			O	16	
H4-1-3	03003SC-4113	Hex. Socket Bolt "B"(M8*L35)			O	12	
H4-1-4	15095SW-3115	Spring Washer (@8)			O	28	
H4-1-5	04029SW-A001	Stud Bolt Washer(S) (@8)			O	28	
H4-1-6	16074PR-UK06	Y-Lm Support Fixing Plate				2	
H4-1-7	14002SC-7113	Hex.Socket Bolt (M6*L15)			O	8	
H4-1-8	16014SW-4115	Spring Washer (@6)			O	8	
H4-1-9	08057SW-1111	Washer (@6)			O	8	
H4-1-10	03016SC-4113	Hex. Socket Bolt (M5*L15)			O	8	
H4-1-11	18048SW-3115	Spring Washer (@5)			O	8	
H4-1-12	16018SW-1111	Washer (@5)			O	8	
H4-1-13	03101300UH00	Sensor Bracket				1	
H4-1-14	03101300UH00	Sensor Bracket				1	
H4-1-15	02015SC-7113	Hex.Socket Bolt(M4*L10)			O	4	
H4-1-16	02028SW-9115	Spring Washer (@4)			O	4	
H4-1-17	05009SW-1111	Washer (@4-L)			O	4	
H4-1-18	02107300UH80	Cable (Sh-73)				2	
H4-1-19	06010SC-8118	Plus Screw (M3*L4)			O	4	
H4-1-20	03100600UH00	Tension Adjusting Plate				4	
H4-1-21	07016SC-7113	Hex.Socket Bolt (M4*L12)			O	8	
H4-1-22	18014SW-3115	Spring Washer (@4-No2)			O	8	
H4-1-23	18015SW-3111	Washer (4@)			O	16	
H4-1-24	03100700UH00	Fixed Block				4	
H4-1-25	11029SC-4113	Hex. Socket Bolt (M4*L20)			O	4	
H4-1-26	18014SW-3115	Spring Washer (@4-No2)			O	4	
H4-1-27	18015SW-3111	Washer (4@)			O	4	
H4-1-28	15030SC-7113	Hex. Socket Bolt (M5*L30)			O	4	
H4-1-29	18048SW-3115	Spring Washer (@5)			O	4	
H4-1-30	16018SW-1111	Washer (@5)			O	4	
H4-1-31	03100500UH00	Y-Tension Adjusting Bracket				4	
H4-1-32	08007SC-4517	Hex. Socket Set Screw (M3*L5)			O	8	
H4-1-33	04001000 E000	Y-Drive Timing Pulley				4	
H4-1-34	12018BR-T121	Needle Bearing Hk1010(Ina)				8	
H4-1-35	12019BR-T121	Fiber Washer R-Tw1020				8	
H4-1-36	16100CW-UK06	Timing Pulley Shaft (Y)				4	
H4-1-37	08062SC-7113	Hex. Socket Bolt (M5*L20)			O	8	

H4-1

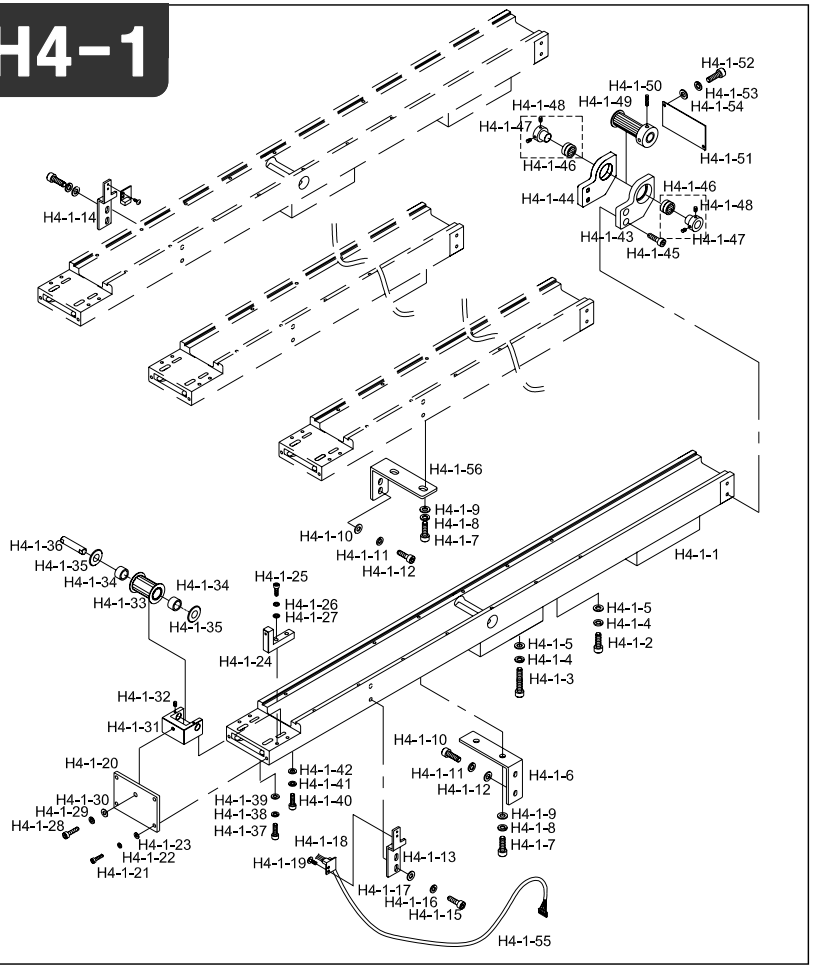

Note

Ref.No	Part No.	Part Name	Application date	Interchangeability	Hardware	Q'ty	Remarks
H4-1-38	18048SW-3115	Spring Washer (@5)			O	8	
H4-1-39	16018SW-1111	Washer (@5)			O	8	
H4-1-40	03016SC-4113	Hex. Socket Bolt (M5*L15)			O	4	
H4-1-41	18014SW-3115	Spring Washer (@4-No2)			O	4	
H4-1-42	18015SW-3111	Washer (4@)			O	4	
H4-1-43	03101000UH00	Y-Bearing Bracket (R)				4	
H4-1-44	03100900UH00	Y-Bearing Bracket (L)				4	
H4-1-45	08091SC-7113	Hex. Socket Bolt (M6*L20)			O	16	
H4-1-46	13026BR-T121	Needle Bearing (6002Z)			O	4	
H4-1-47	03002700T000	Bearing Collar				8	
H4-1-48	03037AF-A001	Driver Screw				16	
H4-1-49	03003500UH60	Y-Drive Timing Pulley				4	
H4-1-50	04014SC-4517	Hex.Socket Set Screw(M5*L5)			O	16	
H4-1-51	03101100UH00	Y-Bearing Bracket Cover				4	
H4-1-52	07035SC-7113	Bracket Screw (M3*L6)			O	16	
H4-1-53	11019SW-9115	Spring Washer (3@)			O	16	
H4-1-54	08011SW-1111	Spring Washer (@3-S)			O	16	
H4-1-55	TTS-42-01	Y-ORIGIN IN Connecting Cable				1	
H4-1-56	GP-004150-00	Bracket for Y-Sensor				2	

H4-2

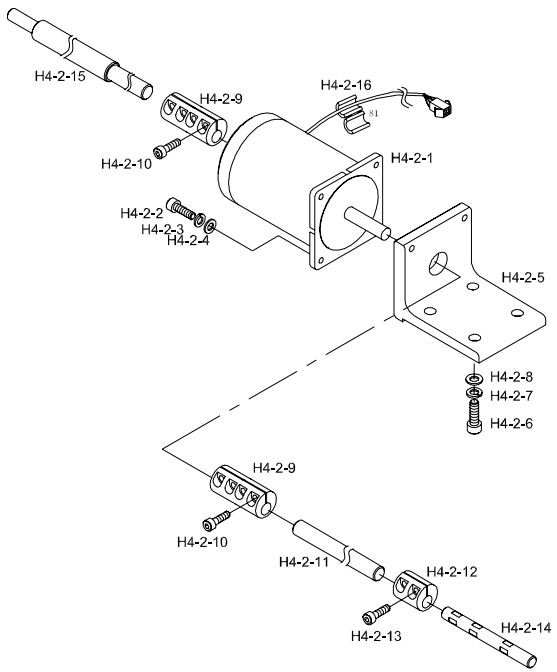

Note

Ref.No	Part No.	Part Name	Application date	Interchangeability	Hardware	Q'ty	Remarks
H4-2-1	16059MT-E131	Y Motor (103H89222-5212)				2	
H4-2-2	14046SC-7113	Hex.Socket Bolt (M6*L30)			O	8	
H4-2-3	16014SW-4115	Spring Washer (@6)			O	8	
H4-2-4	08057SW-1111	Washer (@6)			O	8	
H4-2-5	03100500UH80	Y-Driving Motor Bracket				2	
H4-2-6	14027SC-4113	Hex.Socket Bolt (M8*L30)			O	8	
H4-2-7	15095SW-3115	Spring Washer (@8)			O	8	
H4-2-8	04029SW-A001	Stud Bolt Washer(S) (@8)			O	8	
H4-2-9	03003800B000	Coupling				4	
H4-2-10	08091SC-7113	Hex. Socket Bolt (M6*L20)			O	16	
H4-2-11	GP-005078-00	Y-Driving Shaft UH1512D	Oct,06,04 ~ Apr,26,05	X		4	
	GP-005078-01		Apr,27,05 ~	△		4	
H4-2-12	03005100U000	Coupling "A"				4	
H4-2-13	03016SC-4113	Hex. Socket Bolt (M5*L15)			O	8	
H4-2-14	03100800UH60	Y-Driving Shaft "C"				2	
H4-2-15	GP-007148-00	Y-Driving Shaft "A"				2	
H4-2-16	15045EL-UK01	Bid (L)				2	

H4-3

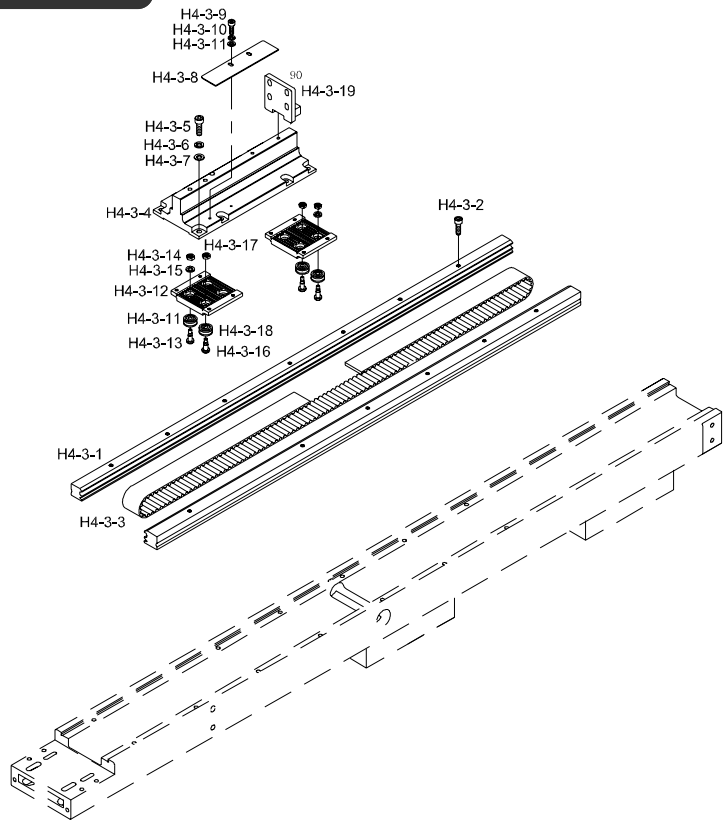

Note

Ref.No	Part No.	Part Name	Application date	Interchangeability	Hardware	Q'ty	Remarks
H4-3-1	GP-004147-00	Cam Roller Guide Rail (L590)				8	
H4-3-2	04016MC-4113	CAM ROLLER GUIDE FIXED SCREW				56	
H4-3-3	-	Y-Driving Timing Belt				4	
H4-3-4	GP-004149-00	Bracket For X-Y Connecting	Aug,24,04 ~ Aug,30,06			4	
	GP-004149-01		Aug,31,06 ~			4	
H4-3-5	07016SC-7113	Hex.Socket Bolt (M4*L12)			O	32	
H4-3-6	18014SW-3115	Spring Washer (@4-No2)			O	32	
H4-3-7	05009SW-1111	Washer (@4-L)			O	32	
H4-3-8	03003800UH60	Plate For Y-Sensing				2	
H4-3-9	22006SC-7113	Hex. Socket Bolt (M3*L8)			O	4	
H4-3-10	11019SW-9115	Spring Washer (3@)			O	4	
H4-3-11	08011SW-1111	Spring Washer (@3-S)			O	4	
H4-3-12	16104CL-H001	Belt Catcher Plate (Y)				8	
H4-3-13	15002CW-B001	Cam Roller Stud (A)				16	
H4-3-14	15029SN-3211	Hex. Nut (M4-No2)			O	16	
H4-3-15	02028SW-9115	Spring Washer (@4)			O	16	
H4-3-16	15003CW-B001	Cam Roller Stud (B)				16	
H4-3-17	12010SN-1211	Hex.Nut (M5)			O	16	
H4-3-18	15001BR-B001	Cam Roller Bearing				32	
H4-3-19	03101500UH00	Bracket for X-Y Sub Connecting				4	

H4-4

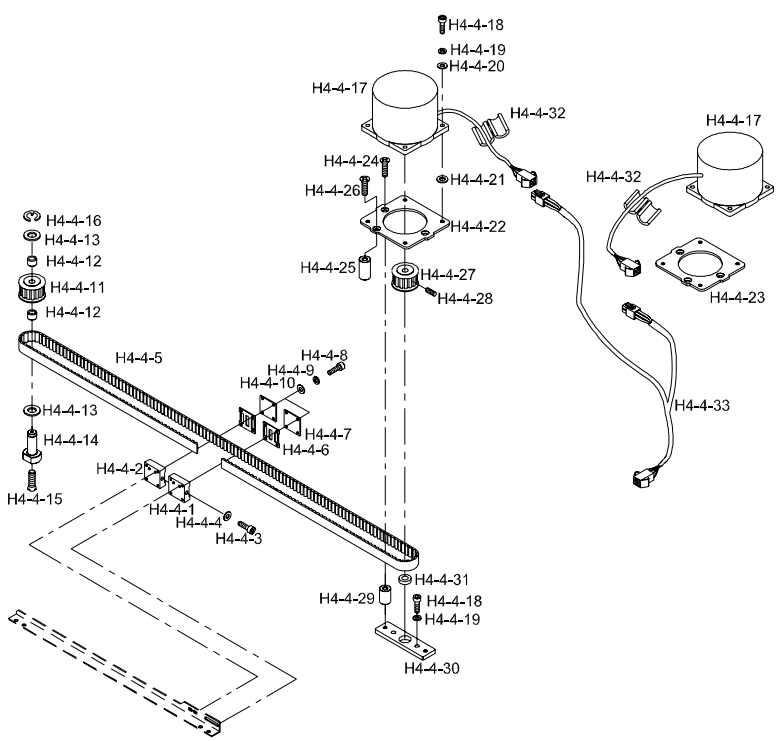

Note

Ref.No	Part No.	Part Name	Application date	Interchangeability	Hardware	Q'ty	Remarks
H4-4-1	14045AD-UK01	Belt Bracket (B)				2	
H4-4-2	14049AD-UK01	Belt Bracket (C)				2	
H4-4-3	15034SC-4113	Hex. Socket Bolt (M4*L45)			O	2	
H4-4-4	05009SW-1111	Washer (@4-L)			O	2	
H4-4-5	03201100UH00	X-Timing Belt (L=1260)				4	
H4-4-6	14051PR-UK01	Fixing Plate				8	
H4-4-7	14052PR-UK01	Fixing Plate Holder				8	
H4-4-8	03071SC-A001	Hex.Scoket Bolt (M3*L15)			O	32	
H4-4-9	11019SW-9115	Spring Washer (3@)			O	32	
H4-4-10	08011SW-1111	Spring Washer (@3-S)			O	32	
H4-4-11	12017PU-T121	Timing Pulley "A"				4	
H4-4-12	12018BR-T121	Needle Bearing Hk1010(Ina)				8	
H4-4-13	12019BR-T121	Fiber Washer R-Tw1020				8	
H4-4-14	03106000U000	Timing Pulley Driving Pin				4	
H4-4-15	15048SC-4119	Plus Screw (M5*L12)			O	4	
H4-4-16	08044SR-4013	E-Ring (@8)				4	
H4-4-17	15076AF-UK01	X-Motor				4	
H4-4-18	08076SC-7113	Hex. Socket Bolt (M5*L12)			O	40	
H4-4-19	18048SW-3115	Spring Washer (@5)			O	40	
H4-4-20	16018SW-1111	Washer (@5)			O	16	
H4-4-21	15061PR-UK01	Motor Space (@5*@11*2T)				16	
H4-4-22	14074PR-UK01	Motor Base (L)				2	
H4-4-23	14075PR-UK01	Motor Base (R)				2	
H4-4-24	15053SC-4119	Plus Screw (M5*L30)			O	8	
H4-4-25	14067AD-UK01	Motor Fixing Shaft (B)				4	
H4-4-26	15055SC-4119	Plus Screw (M5*L35)			O	4	
H4-4-27	14063PU-UK01	Timing Pulley "B"				4	
H4-4-28	04014SC-4517	Hex.Socket Set Screw(M5*L5)			O	8	
H4-4-29	14065AD-UK01	Motor Fixing Shaft (A)				8	
H4-4-30	14069AD-UK01	Motor Block				4	
H4-4-31	14071BR-UK01	Bearing Bc616Zz			O	4	
H4-4-32	15044EL-T121	Bid (S)				4	
H4-4-33	25009EL-UK06	Cable (25-09)				2	

H4-5

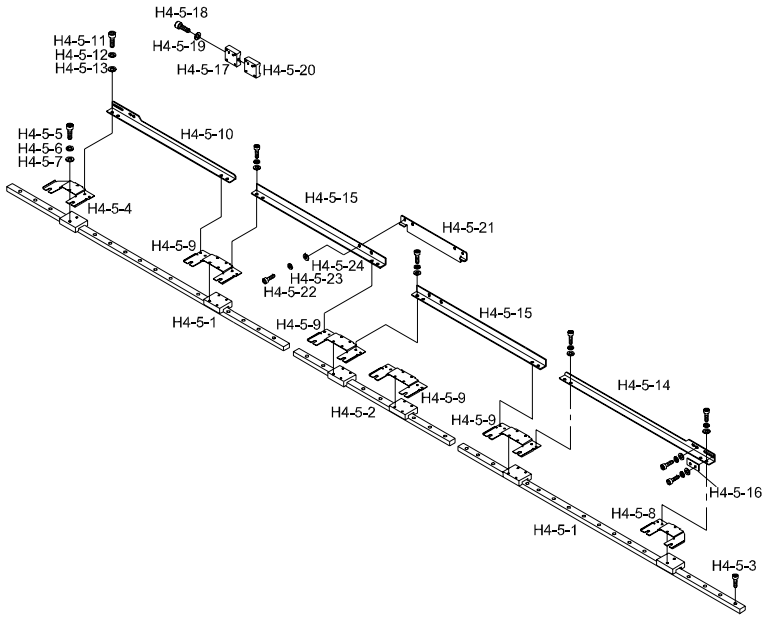

Note

Ref.No	Part No.	Part Name	Application date	Interchangeability	Hardware	Q'ty	Remarks
H4-5-1	03200500UH00	X-Axis L/M Guide "A"				4	
H4-5-2	03200600UH00	X-Axis L/M "B"				1	
H4-5-3	22006SC-7113	Hex. Socket Bolt (M3*L8)			O	92	
H4-5-4	15007PR-UK02	Connecting Plate(L)				2	
H4-5-5	02015SC-7113	Hex.Socket Bolt(M4*L10)			O	16	
H4-5-6	02028SW-9115	Spring Washer (@4)			O	16	
H4-5-7	02063SW-1111	Washer(@4)			O	16	
H4-5-8	15011PR-UK02	Connecting Plate(R)				2	
H4-5-9	15015PR-UK02	Connecting Plate				4	
H4-5-10	03200800UH00	L/M Block Connecting Plate (L)				1	
H4-5-11	02023SC-7113	Hex. Socket Bolt (M4*L8)			O	32	
H4-5-12	02028SW-9115	Spring Washer (@4)			O	32	
H4-5-13	05009SW-1111	Washer (@4-L)			O	32	
H4-5-14	03200900UH00	L/M Block Connecting Plate (R)				2	
H4-5-15	03201000UH00	L/M Block Connecting Plate				4	
H4-5-16	14020PR-UK01	Space				4	
H4-5-17	14045AD-UK01	Belt Bracket (B)				2	
H4-5-18	15034SC-4113	Hex. Socket Bolt (M4*L45)			O	2	
H4-5-19	05009SW-1111	Washer (@4-L)			O	2	
H4-5-20	14048AD-UK01	Belt Bracket (A)				2	
H4-5-21	03201200UH00	X-Moving Sensor Plate				2	
H4-5-22	02023SC-7113	Hex. Socket Bolt (M4*L8)			O	12	
H4-5-23	02028SW-9115	Spring Washer (@4)			O	12	
H4-5-24	05009SW-1111	Washer (@4-L)			O	12	

H4-6

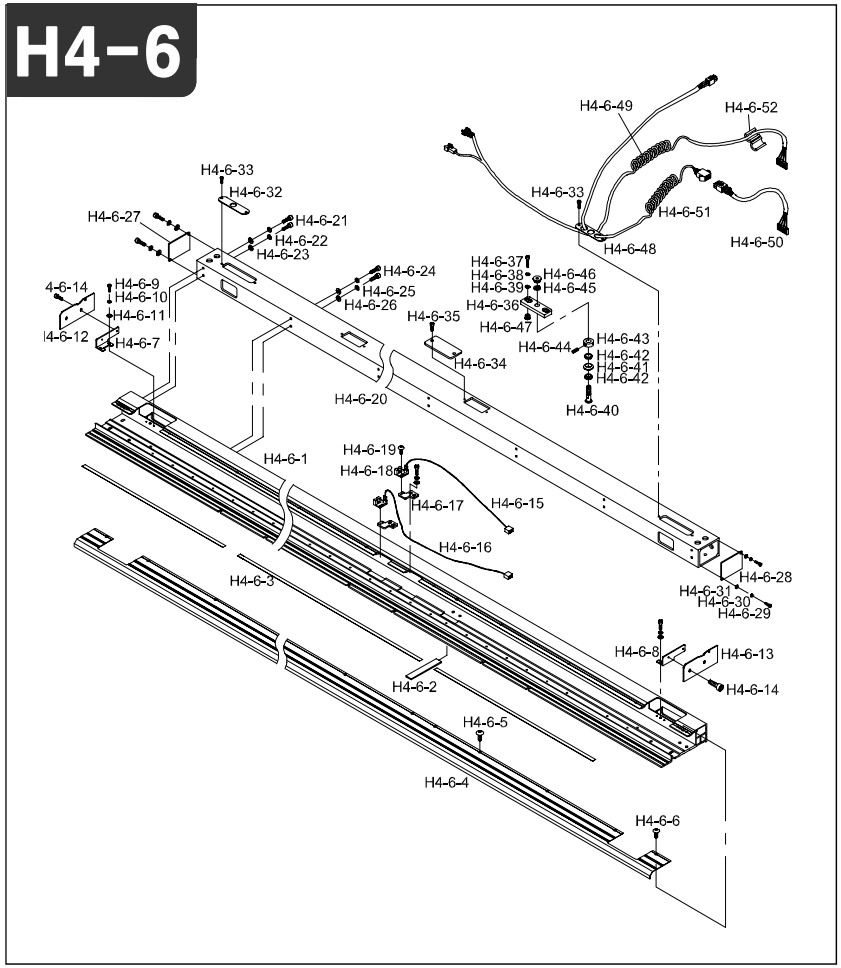

Note

Ref.No	Part No.	Part Name	Application date	Interchangeability	Hardware	Q'ty	Remarks
H4-6-1	GP-005070-00	X-Lm Guide Frame	Oct,06,04 ~ Jun,01,06	X		2	
	GP-005070-01		Jun,02,06 ~	△		2	
H4-6-2	15062SF-T121	Felt				16	
H4-6-3	03200700UH00	Tubular Frame Rail Plate				2	
H4-6-4	03201300UH00	X-Cover (L=2931)				24	
H4-6-5	18153SC-3123	Plus Screw (M4*L10)			O	2	
H4-6-6	15042SC-3123	Truss Screw (M4*L6)			O	4	
H4-6-7	GP-005104-00	X-Frame Side Cover Holder (L)				2	
H4-6-8	GP-005105-00	X-Frame Side Cover Holder (R)				2	
H4-6-9	02023SC-7113	Hex. Socket Bolt (M4*L8)			O	16	
H4-6-10	02028SW-9115	Spring Washer (@4)			O	16	
H4-6-11	05009SW-1111	Washer (@4-L)			O	16	
H4-6-12	GP-005106-00	X-Axis Frame Side Cover (L)				2	
H4-6-13	GP-005107-00	X-Axis Frame Side Cover (R)				2	
H4-6-14	15042SC-3123	Truss Screw (M4*L6)			O	8	
H4-6-15	25052EL-UK01	Last-Sensor (Black) 4Ht-52				2	
H4-6-16	25053EL-UK01	Last-Sensor (White) 4Ht-53				2	
H4-6-17	15067PR-UK01	Sensor Plate				4	
H4-6-18	15043EL-UK01	X-Positioning Sensor				4	
H4-6-19	06010AF-8118	Plus Screw(M3*L4)			O	8	
H4-6-20	GP-005071-00	X-FRAME SUPPORT BAR	Oct,06,04 ~ Dec,01,04	X		2	
	GP-005071-01		Dec,02,04 ~ May,17,05	△		2	
	GP-005071-02		May,18,05 ~	△		2	
H4-6-21	18047SC-7113	HEX. SOCKET BOLT (M5*L15)			O	4	
H4-6-22	18048SW-3115	SPRING WASHER (5@)			O	4	
H4-6-23	18049SW-3111	WASHER (@5)			O	4	
H4-6-24	02004SC-4113	HEX. SOCKET BOLT (M4*L10)			O	36	
H4-6-25	18014SW-3115	SPRING WASHER (@4-NO2)			O	36	
H4-6-26	18015SW-3111	WASHER (4@)			O	36	
H4-6-27	03000200UH80	X-Frame Support Bar Cover L				2	
H4-6-28	03000200UH80	X-Frame Support Bar Cover R				2	
H4-6-29	15112SC-7113	HEX. SOCKET SET SCREW(M3*L8)			O	8	
H4-6-30	11019SW-9115	SPRING WASHER (3@)			O	8	
H4-6-31	06011SW-2111	WASHER (@3)			O	8	
H4-6-32	15082PR-W121	FIXING PLATE FOR BUSHING				2	
H4-6-33	02023SC-7113	HEX.SOCKET BOLT (M4*L8)			O	8	
H4-6-34	03000100UH00	Roller Plate Cover				8	

H4-6

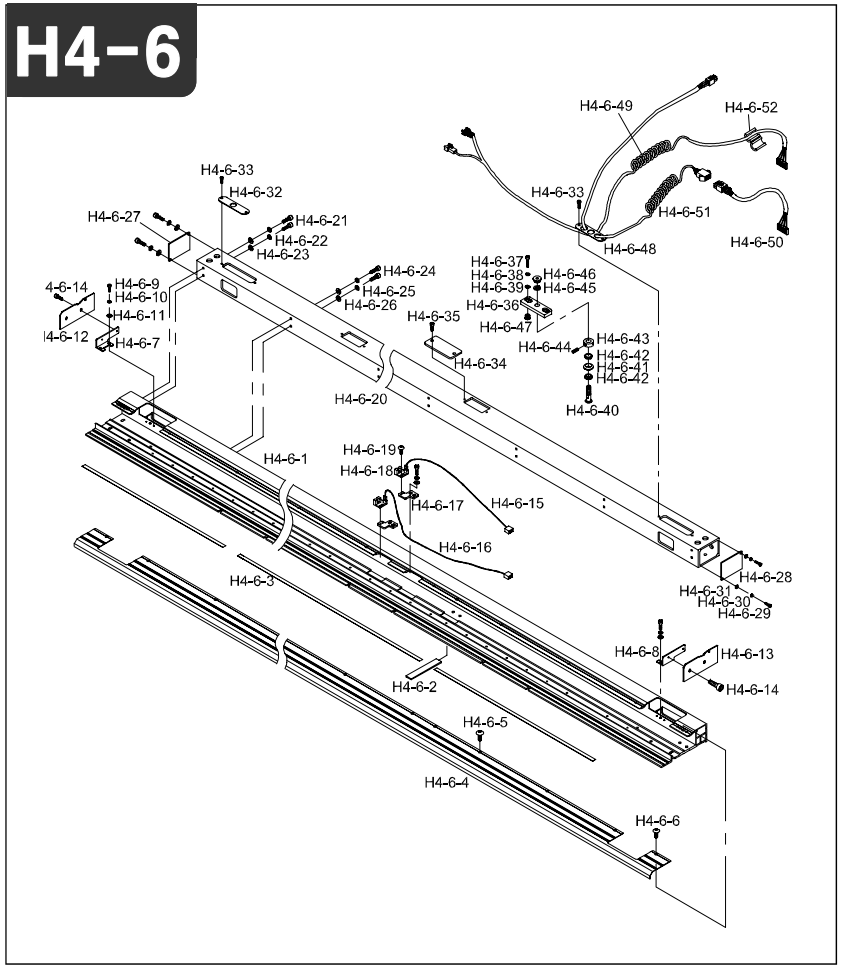

Note

Ref.No	Part No.	Part Name	Application date	Interchangeability	Hardware	Q'ty	Remarks
H4-6-35	22006SC-7113	Hex. Socket Bolt (M3*L8)			O	16	
H4-6-36	03101700UH00	Roller Fixed Plate				4	
H4-6-37	02023SC-7113	Hex.Socket Bolt (M4*L8)			O	8	
H4-6-38	18014SW-3115	Spring Washer (@4-No2)			O	8	
H4-6-39	18015SW-3111	Washer (4@)			O	8	
H4-6-40	15104CW-UK01	Roller Stud Bolt				4	
H4-6-41	15130AF-A001	Roller Guide				4	
H4-6-42	15106BR-A001	Flange Bearing (1280Zz)			O	8	
H4-6-43	15107CW-UK01	Roller Collar				4	
H4-6-44	03022SC-4517	Hex. Socket Set Screw(M4*L5)			O	8	
H4-6-45	18048SW-3115	Spring Washer (5@)			O	4	
H4-6-46	04032SN-A001	Hex. Nut (M8-No2)			O	4	
H4-6-47	03201900UH00	X-Frame Screw Bush				8	
H4-6-48	15087PR-UK02	Cable Plate For Bushing				2	
H4-6-49	25009EL-UK06	Cable (25-09)				2	
H4-6-50	25038EL-UK06	Cable (25-38)				2	
H4-6-51	25041EL-UK01	X Original In (4Ht-41)				2	
H4-6-52	15045EL-UK01	Bid (L)				2	

SETTING 1

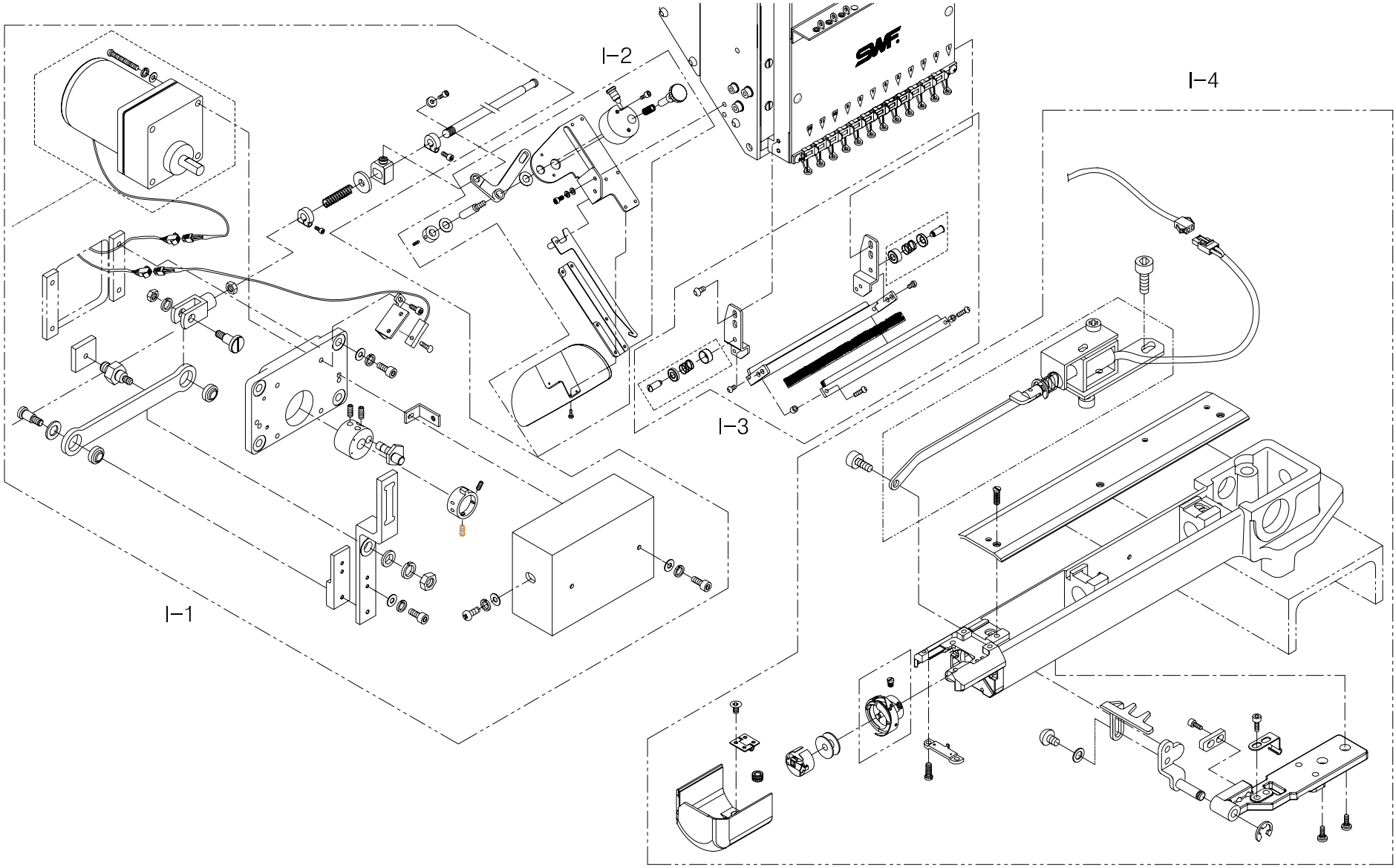

I-1

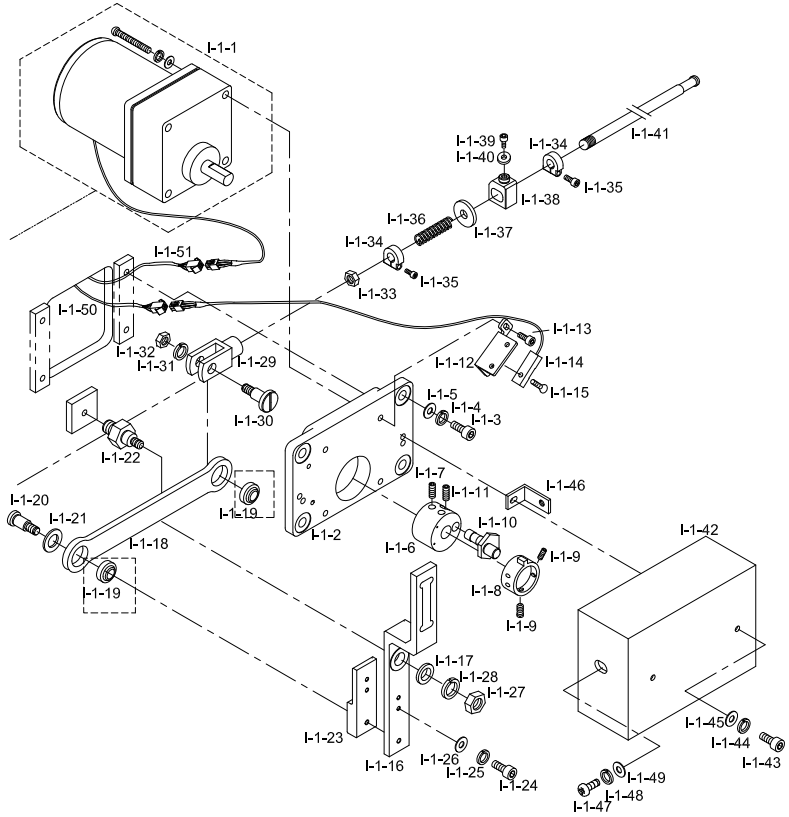

Note

Ref.No	Part No.	Part Name	Application date	Interchangeability	Hardware	Q'ty	Remarks
I-1-1	EP-000141-00	Upper Thread Hook Motor Unit				1	
I-1-2	GP-015086-00	Motor Base				1	
I-1-3	06025MC-7113	Hex.Socket Bolt(M6*L25)			O	4	
I-1-4	16014SW-4115	Spring Washer (@6)			O	4	
I-1-5	08057SW-1111	Washer (@6)			O	4	
I-1-6	03003300H000	Cam Shaft Fixing Block				4	
I-1-7	05008MC-4517	Hex.Socket Bolt(M5*L8)			O	2	
I-1-8	GP-005184-00	SENSOR SENSING ADJUSTING RING	Oct,14,04 ~ May,18,05			1	
	GP-005184-01		May,19,05 ~			1	
I-1-9	04014SC-4517	Hex.Socket Set Screw(M5*L5)			O	2	
I-1-10	03003500H000	Motor Driving Cam Shaft				1	
I-1-11	04014SC-4517	Hex.Socket Set Screw(M5*L5)			O	1	
I-1-12	GP-015085-00	UPPER THREAD HOOK SENSOR BASE				1	
I-1-13	07035SC-7113	Bracket Screw (M3*L6)			O	2	
I-1-14	15-027A-2070	SENSOR				1	
I-1-15	13061SC-8119	Plus Screw (M3*L10)			O	1	
I-1-16	03003910H000	Upper Thread Driving Plate				1	
I-1-17	WS-000549-00	Stud Bolt Washer	Feb,20,09 ~			1	
	WS-000549-01		Jun,24,09 ~				
I-1-18	03004200HE00	Motor Driving Connect Plate				1	
I-1-19	03004400H000	Motor Driving Connect Bearing				2	
I-1-20	03008300H000	Connecting Plate Stud Screw A			O	1	
I-1-21	03004500H000	Connecting Plate Pin Washer				1	
I-1-22	03003810H000	Stud Bolt For Driving Plate				1	
I-1-23	03004110H000	DRIVING PLATE BLOCK B				2	
I-1-24	18047SC-7113	HEX/ SOCKET BOLT (M5*L15)				2	
I-1-25	18048SW-3115	SPRING WASHER (5@)			O	2	
I-1-26	18049SW-3111	WASHER (@5)			O	2	
I-1-27	04032SN-A001	HEX. NUT (M8-NO2)			O	1	
I-1-28	15095SW-3115	SPRING WASHER (@8)			O	1	
I-1-29	03004800H000	Connecting Plate Knuckle				1	
I-1-30	03004700H000	Connecting Plate Stud Screw				1	
I-1-31	03026SW-9115	SPRING WASHER (@6)			O	1	
I-1-32	13042SN-1111	Hex.Nut (M6*T5-R)			O	1	
I-1-33	04032SN-A001	Hex. Nut (M8-No2)			O	1	
I-1-34	03002610H000	Return Spring Stopper				6	
I-1-35	05008SC-4113	Hex.Socket Bolt (M4*L16)			O	6	
I-1-36	03002700H000	Return Spring				3	
I-1-37	03002800H000	Return Spring Stopper Washer				3	

I-1

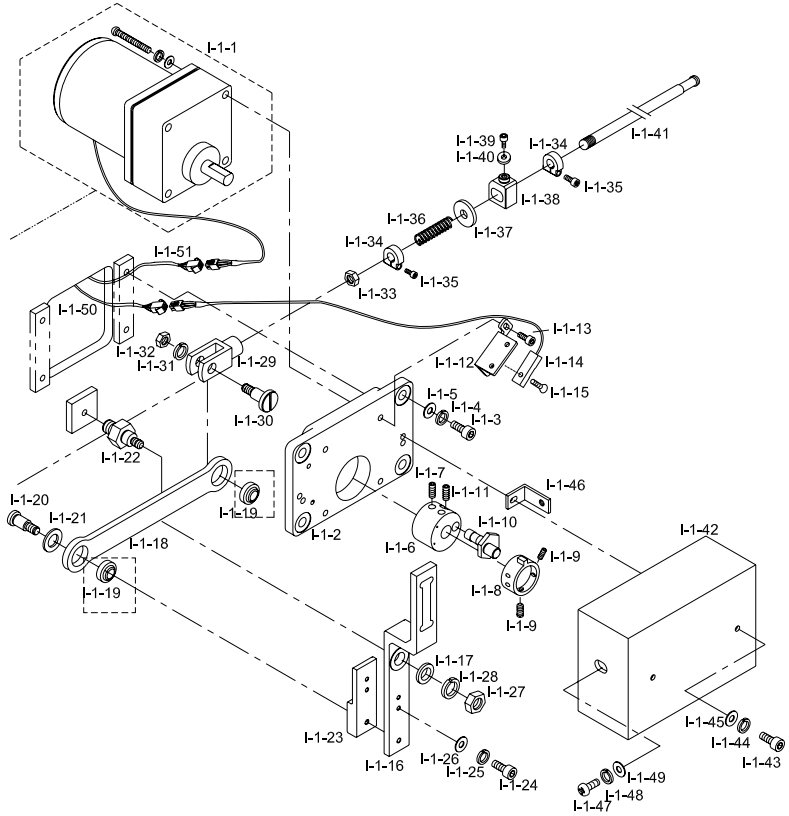

Note

Ref.No	Part No.	Part Name	Application date	Interchangeability	Hardware	Q'ty	Remarks
I-1-38	03003000H000	Return Spring Fix Pin				3	
I-1-39	02015SC-7113	Hex.Socket Bolt(M4*L10)			O	3	
I-1-40	03002900H000	Return Spring Fix Pin Washer				3	
I-1-41	GP-004937-00	Upper Thread Driving Shaft A(L=575) UH1504D				1	
	03007010UH60	Upper Thread Driving Shaft A(L=976) UH1506D					
	GP-004156-00	Upper Thread Driving Shaft A (L=1372) UH1208D					
	03007000UH60	Upper Thread Driving Shaft A(L=2175) UH1512D					
I-1-42	12001900U060	Upper Thread Hook Motor Cover				1	
I-1-43	02023SC-7113	Hex.Socket Bolt (M4*L16)			O	2	
I-1-44	18014SW-3115	SPRING WASHER (4@)			O	2	
I-1-45	18015SW-3111	Washer (4@)			O	2	
I-1-46	03008600H000	Motor Cover Fixing Bracket				2	
I-1-47	02023SC-7113	Hex.Socket Bolt (M4*L8)			O	2	
I-1-48	18014SW-3115	Spring Washer (@4-No2)			O	2	
I-1-49	18015SW-3111	Washer (4@)			O	2	
I-1-50	02106600U040	Sh-66-2				1	
I-1-51	02106700U040	Sh-66-2				1	

I-2

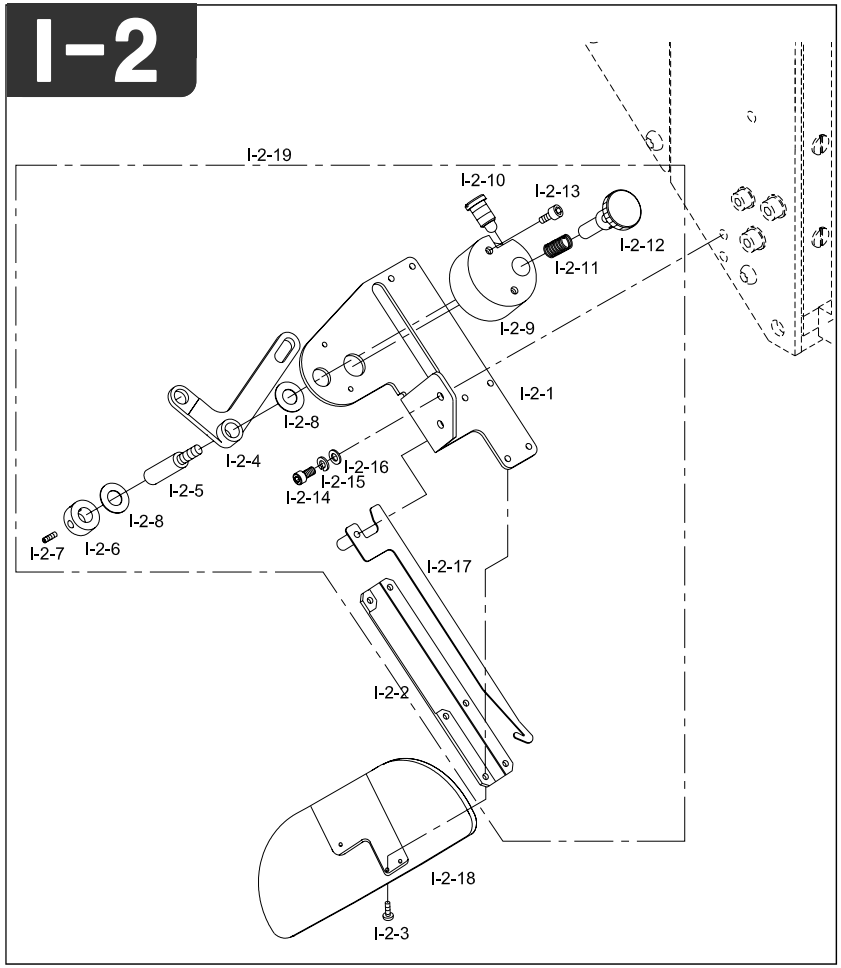

Note

Ref.No	Part No.	Part Name	Application date	Interchangeability	Hardware	Q'ty	Remarks
I-2-1	03500110H000	Upper Thread Catcher Base				3	
I-2-2	03500210H000	Upper Thread Hook Base Cover				3	
I-2-3	03005MC-3123	Plus Screw (M3*L5)			O	18	
I-2-4	03500500H000	Upper Catcher Driving Lever				3	
I-2-5	03500600H000	Driving Lever Pin				3	
I-2-6	03500700H000	Driving Lever Pin Collar				3	
I-2-7	04014SC-4517	Hex.Socket Set Screw(M5*L5)			O	6	
I-2-8	03500800H000	Driving Lever Pin Washer				9	
I-2-9	03500900H000	Clutch Block				3	
I-2-10	03501000H000	Clutch Stud Screw				3	
I-2-11	03501100H000	Clutch Spring				3	
I-2-12	03501200H000	Clutch Dial				3	
I-2-13	11029SC-4113	Hex. Socket Bolt (M4*L20)			O	6	
I-2-14	02023SC-7113	Hex.Socket Bolt (M4*L8)			O	6	
I-2-15	18014SW-3115	Spring Washer (@4-No2)			O	6	
I-2-16	18015SW-3111	Washer (4@)			O	6	
I-2-17	03500330H000	Upper Thread Hook				3	
I-2-18	12209100U000	CAP GUIDE				3	
I-2-19	08500000I000	Upper Thread Catcher Assy				3	

I

I-3

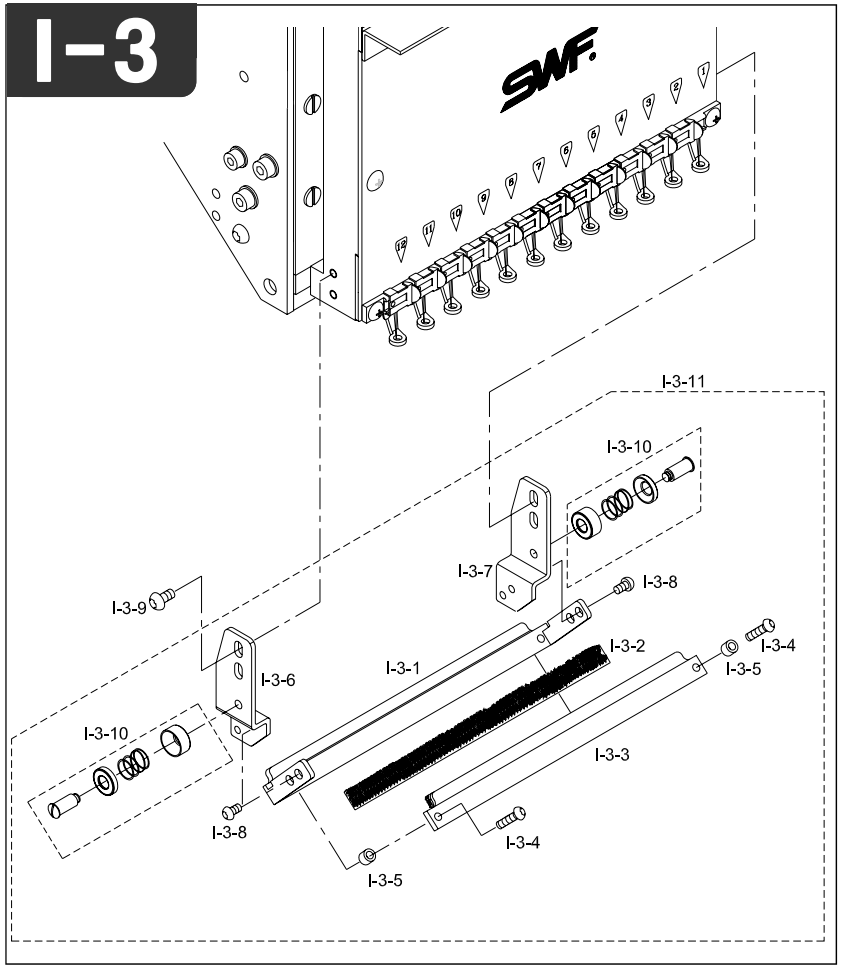

Note

Ref.No	Part No.	Part Name	Application date	Interchangeability	Hardware	Q'ty	Remarks
I-3-1	09030PR-A002	Upper Thread Presser Base 9C				3	
	09026PR-AB00	Upper Thread Presser Base 12C					
	09052PR-T151	Upper Thread Presser Base 15C					
I-3-2	09031ET-A002	Velcro (9C)				3	
	09027ET-AB00	Velcro (12C)					
	09027ET-T151	Velcro (15C)					
I-3-3	09033PR-A002	Presser Base Cover (9C)				3	
	09029PR-AB00	Presser Base Cover (12C)					
	09029PR-T151	Presser Base Cover (15C)					
I-3-4	07018SC-8118	Plus Screw (M3*L8)			O	6	
I-3-5	09038CW-A001	Thread Presser Space				6	
I-3-6	09040PR-A001	Bracket (L)				3	
I-3-7	09041PR-A001	Bracket (R)				3	
I-3-8	06010SC-8118	Plus Screw (M3*L4)			O	6	
I-3-9	02009SC-A001	Side Cover Screw				6	
I-3-10	09044PR-A001	Upper Thread Holder Disk Set				6	
I-3-11	08600003B000	Upper Thread Presser Base 9C				3	
	08600004B000	Assy 12C					
	08600005B000	15C					

I

I-4

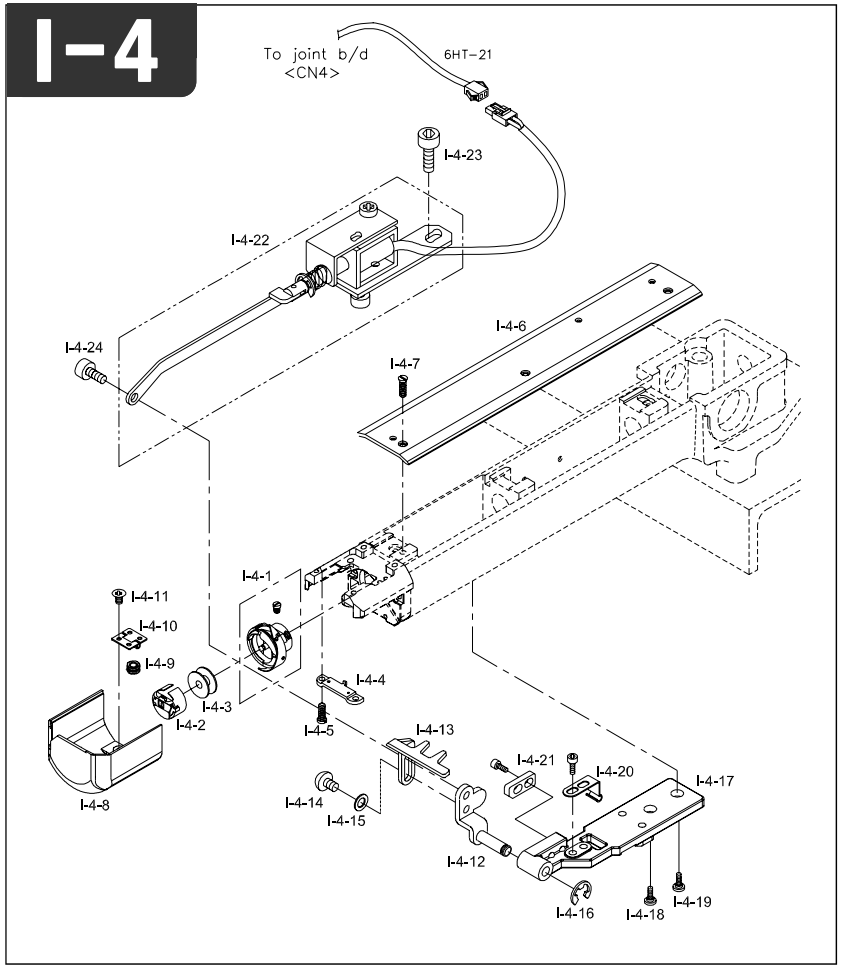

Note

Ref.No	Part No.	Part Name	Application date	Interchangeability	Hardware	Q'ty	Remarks
I-4-1	04033AF-D002	Rotary Hook Set				6	
I-4-2	04034AF-A001	Bobbin Case Set				6	
I-4-3	04035AF-A001	Bobbin				6	
I-4-4	GP-005358-00	Rotary Hook Support	Nov,01,04 ~ Jul,12,05	X		6	
	GP-005358-01		Jul,13,05 ~	△		6	
I-4-5	02011SC-3125	Rotary Hook Support Screw				12	
I-4-6	GP-005359-00	Bed Cover	Nov,01,04 ~ May,14,05	X		6	
	GP-005359-01		May,15,05 ~ Aug,24,05	△		6	
	GP-005359-02		Aug,25,05 ~	△		6	
I-4-7	02030SC-T121	Bed Cover Screw(9/64" 40)				18	
I-4-8	GP-005360-00	Hook Cover	Nov,01,05 ~ Oct,19,05	X		6	
	GP-005360-01		Oct,20,05 ~ May,24,06	△		6	
	GP-005360-02		May,25,06 ~	△		6	
I-4-9	GP-005361-00	Hook Cover Insert				12	
I-4-10	HG-000001-00	Hook Cover Hinge				6	
I-4-11	08014AF-A001	Plus Screw (M3*L8)			O	12	
I-4-12	AS-001429-00	Picker Base Ass'Y	Nov,01,05 ~ May,29,06	X		6	
	AS-001429-01		May,30,06 ~ Dec,03,08	△		6	
	AS-001429-02		Dec,04,08 ~	△		6	
I-4-13	GP-005368-00	Picker				6	
I-4-14	07018SC-8118	Plus Screw (M3*L8)			O	12	
I-4-15	WS-000085-00	Washer for Picker Base				6	
I-4-16	15159SR-4013	E-Ring (3@)				6	
I-4-17	GP-005366-00	Picker Bracket				6	
I-4-18	116410S-8118	Driver Screw 11/64-40,L10				6	
I-4-19	116410S-8118	Driver Screw 11/64-40,L10				6	
I-4-20	GP-005362-00	Hook Cover Holder				6	
I-4-21	GP-005369-00	Picker Stopper	Nov,01,05 ~ May,18,05	X		6	
	GP-005369-01		May,19,05 ~	△		6	
I-4-22	AS-003154-00	PICKER SOLENOID	Jul,19,05 ~ Aug,21,06	X		6	
	AS-003154-01		Aug,22,06 ~	△		6	
I-4-23	02015SC-7113	Hex.Socket Bolt(M4*L10)			O	12	
I-4-24	08012CW-T121	Connecting Plate Stud Screw				6	

I

SETTING 2

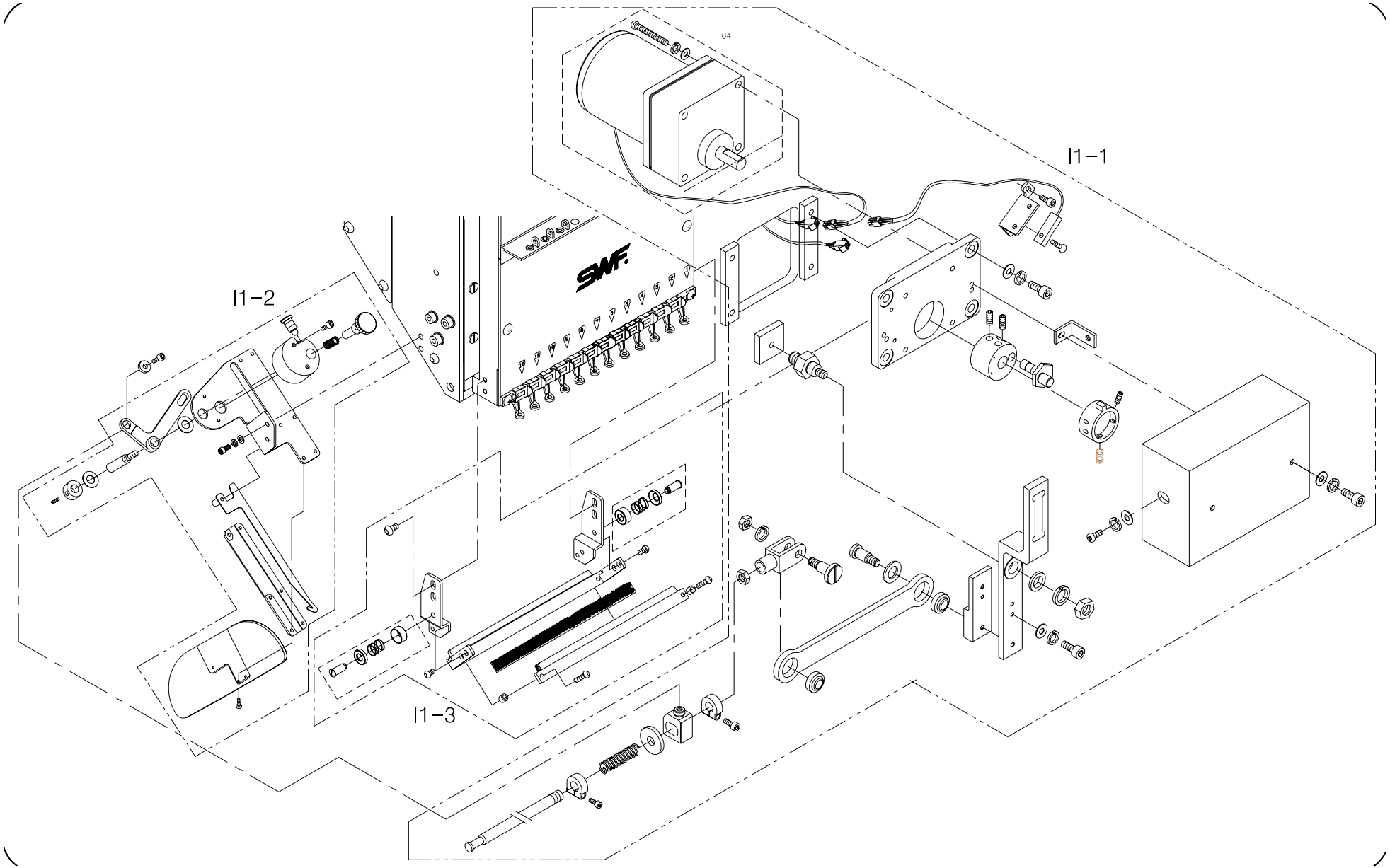

I1-1

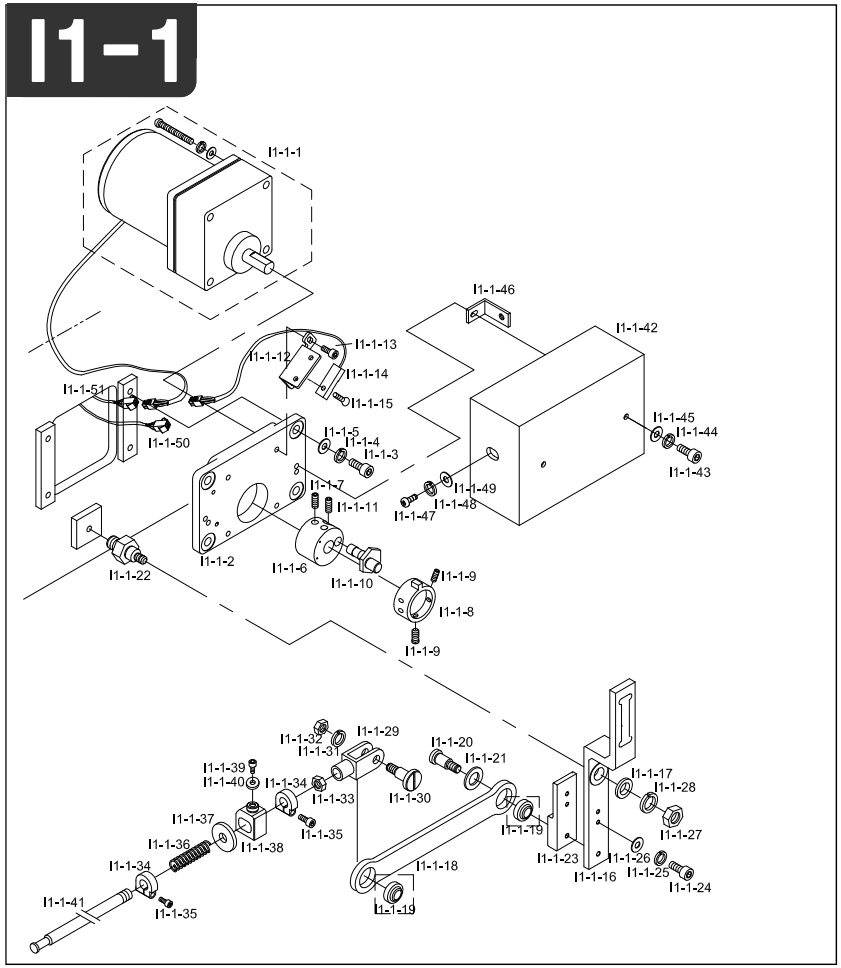

Note

Ref.No	Part No.	Part Name	Application date	Interchangeability	Hardware	Q'ty	Remarks
I1-1-1	EP-000141-00	Upper Thread Hook Motor Unit				1	
I1-1-2	GP-015086-00	Motor Base				1	
I1-1-3	06025MC-7113	Hex.Socket Bolt(M6*L25)			O	4	
I1-1-4	16014SW-4115	Spring Washer (@6)			O	4	
I1-1-5	08057SW-1111	Washer (@6)			O	4	
I1-1-6	03003300H000	Cam Shaft Fixing Block				4	
I1-1-7	05008MC-4517	Hex.Socket Bolt(M5*L8)			O	2	
I1-1-8	GP-005184-00	SENSOR SENSING ADJUSTING RING	Oct,14,04 ~ May,18,05			2	
	GP-005184-01		May,19,05 ~			2	
I1-1-9	04014SC-4517	Hex.Socket Set Screw(M5*L5)			O	2	
I1-1-10	03003500H000	Motor Driving Cam Shaft				1	
I1-1-11	04014SC-4517	Hex.Socket Set Screw(M5*L5)			O	1	
I1-1-12	GP-015085-00	UPPER THREAD HOOK SENSOR BASE				1	
I1-1-13	07035SC-7113	Bracket Screw (M3*L6)			O	2	
I1-1-14	15-027A-2070	SENSOR				1	
I1-1-15	13061SC-8119	Plus Screw (M3*L10)			O	1	
I1-1-16	03003910H000	Upper Thread Driving Plate				1	
I1-1-17	WS-000549-00	Stud Bolt Washer	Feb,20,09 ~ Jun,24,09		O	1	
	WS-000549-01		Jun,24,09 ~				
I1-1-18	03004200HE00	Motor Driving Connect Plate				1	
I1-1-19	03004400H000	Motor Driving Connect Bearing			O	2	
I1-1-20	03008300H000	Connecting Plate Stud Screw A				1	
I1-1-21	03004500H000	Connecting Plate Pin Washer				1	
I1-1-22	03003810H000	Stud Bolt For Driving Plate				1	
I1-1-23	03004110H000	DRIVING PLATE BLOCK B				2	
I1-1-24	18047SC-7113	HEX/ SOCKET BOLT (M5*L15)			O	2	
I1-1-25	18048SW-3115	SPRING WASHER (5@)			O	2	
I1-1-26	18049SW-3111	WASHER (@5)			O	2	
I1-1-27	04032SN-A001	HEX. NUT (M8-NO2)			O	1	
I1-1-28	15095SW-3115	SPRING WASHER (@8)			O	1	
I1-1-29	03004800H000	Connecting Plate Knuckle				1	
I1-1-30	03004700H000	Connecting Plate Stud Screw				1	
I1-1-31	03026SW-9115	SPRING WASHER (@6)			O	1	
I1-1-32	13042SN-1111	Hex.Nut (M6*T5-R)			O	1	
I1-1-33	04032SN-A001	Hex. Nut (M8-No2)			O	1	
I1-1-34	03002610H000	Return Spring Stopper				6	
I1-1-35	05008SC-4113	Hex.Socket Bolt (M4*L16)			O	6	
I1-1-36	03002700H000	Return Spring				3	
I1-1-37	03002800H000	Return Spring Stopper Washer				3	

I

I1-1

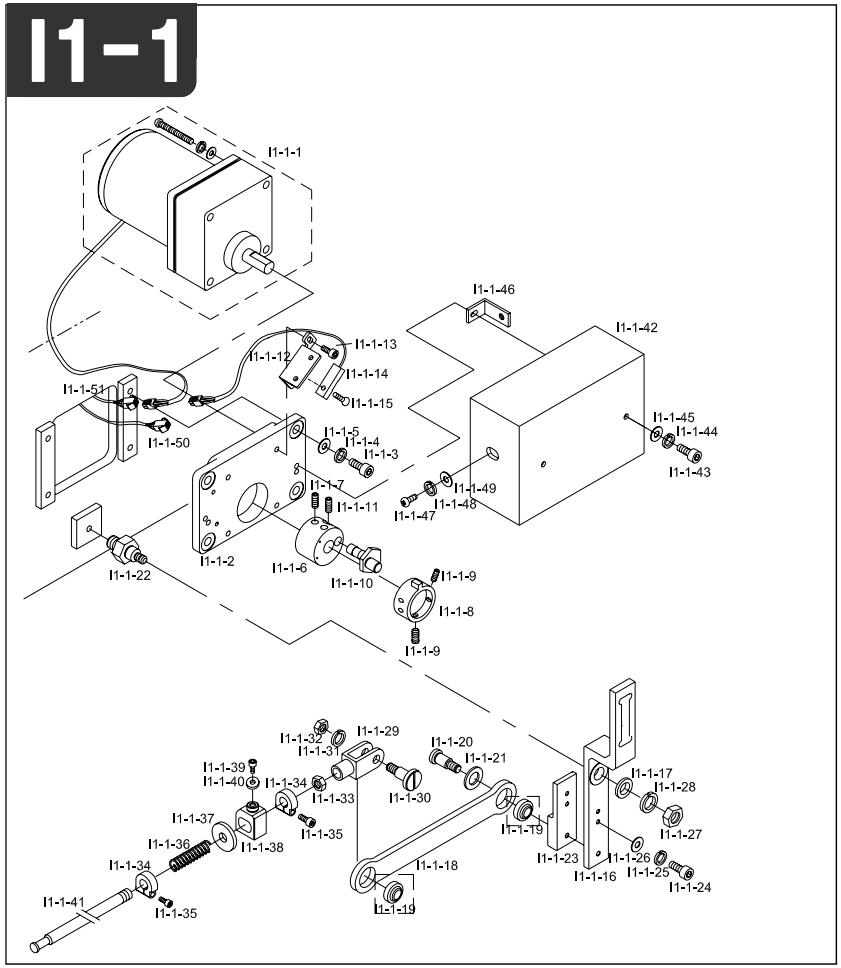

Note

Ref.No	Part No.	Part Name	Application date	Interchangeability	Hardware	Q'ty	Remarks
I1-1-38	03003000H000	Return Spring Fix Pin				3	
I1-1-39	02015SC-7113	Hex.Socket Bolt(M4*L10)			O	3	
I1-1-40	03002900H000	Return Spring Fix Pin Washer				3	
I1-1-41	GP-004938-00	Upper Thread Driving Shaft B(L=649) UH1504D				1	
	03007110UH60	Upper Thread Driving Shaft B(L=1094) UH1506D					
	GP-004157-00	Upper Thread Driving Shaft B (L=1494) UH1208D					
	GP-005076-00	Upper Thread Driving Shaft B(L=2295) UH1512D					
I1-1-42	12001900U060	Upper Thread Hook Motor Cover				1	
I1-1-43	02023SC-7113	Hex.Socket Bolt (M4*L16)			O	2	
I1-1-44	18014SW-3115	SPRING WASHER (4@)			O	2	
I1-1-45	18015SW-3111	Washer (4@)			O	2	
I1-1-46	03008600H000	Motor Cover Fixing Bracket				2	
I1-1-47	02023SC-7113	Hex.Socket Bolt (M4*L8)			O	2	
I1-1-48	18014SW-3115	Spring Washer (@4-No2)			O	2	
I1-1-49	18015SW-3111	Washer (4@)			O	2	
I1-1-50	02106600U040	Sh-66-2				1	
I1-1-51	02106700U040	Sh-66-2				1	

I

I1-2

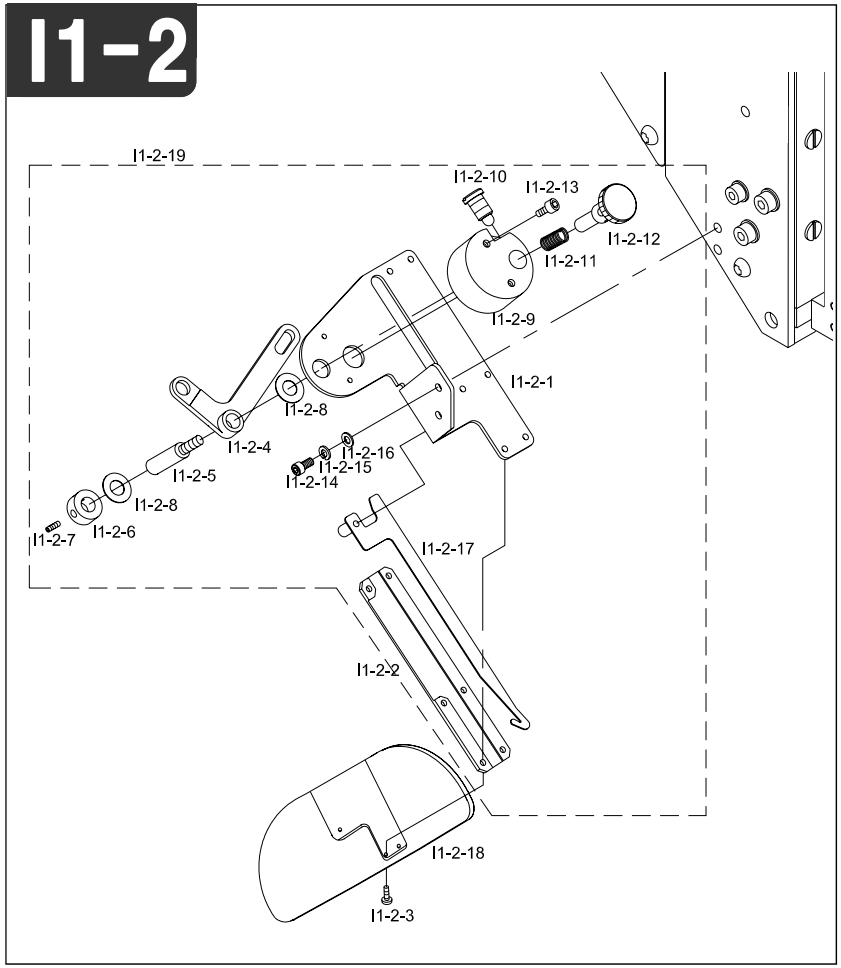

Note

Ref.No	Part No.	Part Name	Application date	Interchangeability	Hardware	Q'ty	Remarks
I1-2-1	03500110H000	Upper Thread Catcher Base				3	
I1-2-2	03500210H000	Upper Thread Hook Base Cover				3	
I1-2-3	03005MC-3123	Plus Screw (M3*L5)			O	18	
I1-2-4	03500500H000	Upper Catcher Driving Lever				3	
I1-2-5	03500600H000	Driving Lever Pin				3	
I1-2-6	03500700H000	Driving Lever Pin Collar				3	
I1-2-7	04014SC-4517	Hex.Socket Set Screw(M5*L5)			O	6	
I1-2-8	03500800H000	Driving Lever Pin Washer				9	
I1-2-9	03500900H000	Clutch Block				3	
I1-2-10	03501000H000	Clutch Stud Screw				3	
I1-2-11	03501100H000	Clutch Spring				3	
I1-2-12	03501200H000	Clutch Dial				3	
I1-2-13	11029SC-4113	Hex. Socket Bolt (M4*L20)			O	6	
I1-2-14	02023SC-7113	Hex.Socket Bolt (M4*L8)			O	6	
I1-2-15	18014SW-3115	Spring Washer (@4-No2)			O	6	
I1-2-16	18015SW-3111	Washer (4@)			O	6	
I1-2-17	03500330H000	Upper Thread Hook				3	
I1-2-18	12209100U000	CAP GUIDE				3	
I1-2-19	08500000I000	Upper Thread Catcher Assy					

I

I1-3

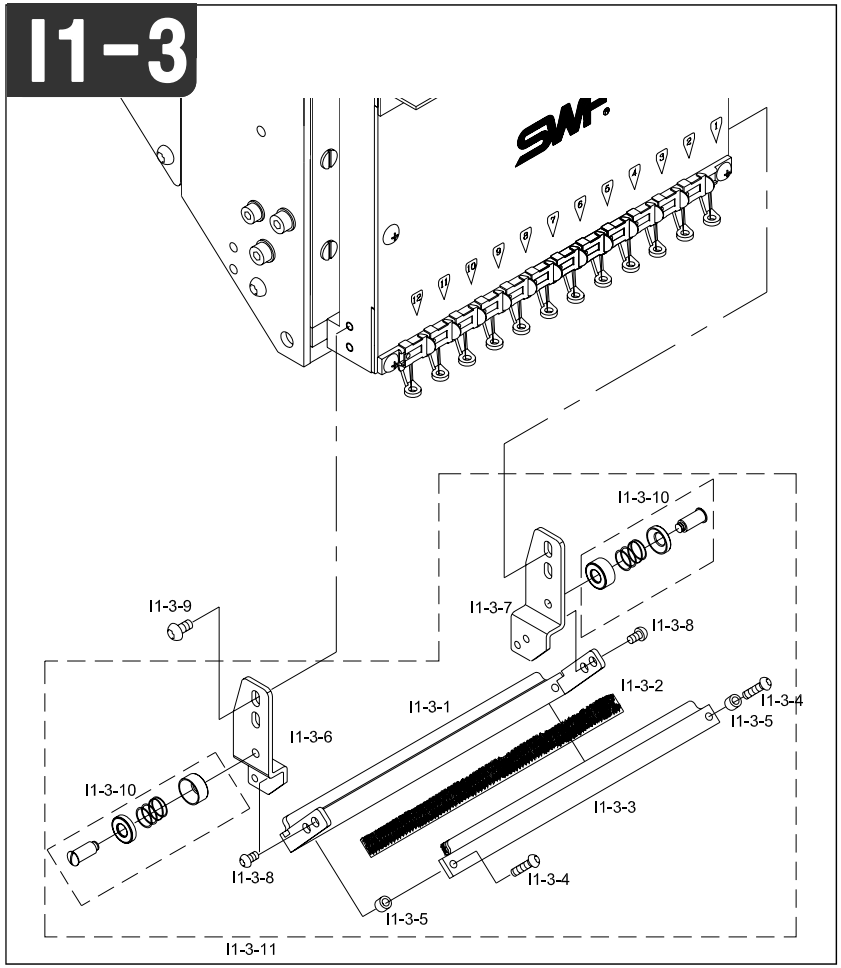

Note

Ref.No	Part No.	Part Name	Application date	Interchangeability	Hardware	Q'ty	Remarks
I1-3-1	09030PR-A002	Upper Thread Presser Base 9C				3	
	09026PR-AB00	Upper Thread Presser Base 12C					
	09052PR-T151	Upper Thread Presser Base 15C					
I1-3-2	09031ET-A002	Velcro (9C)				3	
	09027ET-AB00	Velcro (12C)					
	09027ET-T151	Velcro (15C)					
I1-3-3	09033PR-A002	Presser Base Cover (9C)				3	
	09029PR-AB00	Presser Base Cover (12C)					
	09029PR-T151	Presser Base Cover (15C)					
I1-3-4	07018SC-8118	Plus Screw (M3*L8)			O	6	
I1-3-5	09038CW-A001	Thread Presser Space				6	
I1-3-6	09040PR-A001	Bracket (L)				3	
I1-3-7	09041PR-A001	Bracket (R)				3	
I1-3-8	06010SC-8118	Plus Screw (M3*L4)			O	6	
I1-3-9	02009SC-A001	Side Cover Screw				6	
I1-3-10	09044PR-A001	Upper Thread Holder Disk Set				6	

I

SPOOL

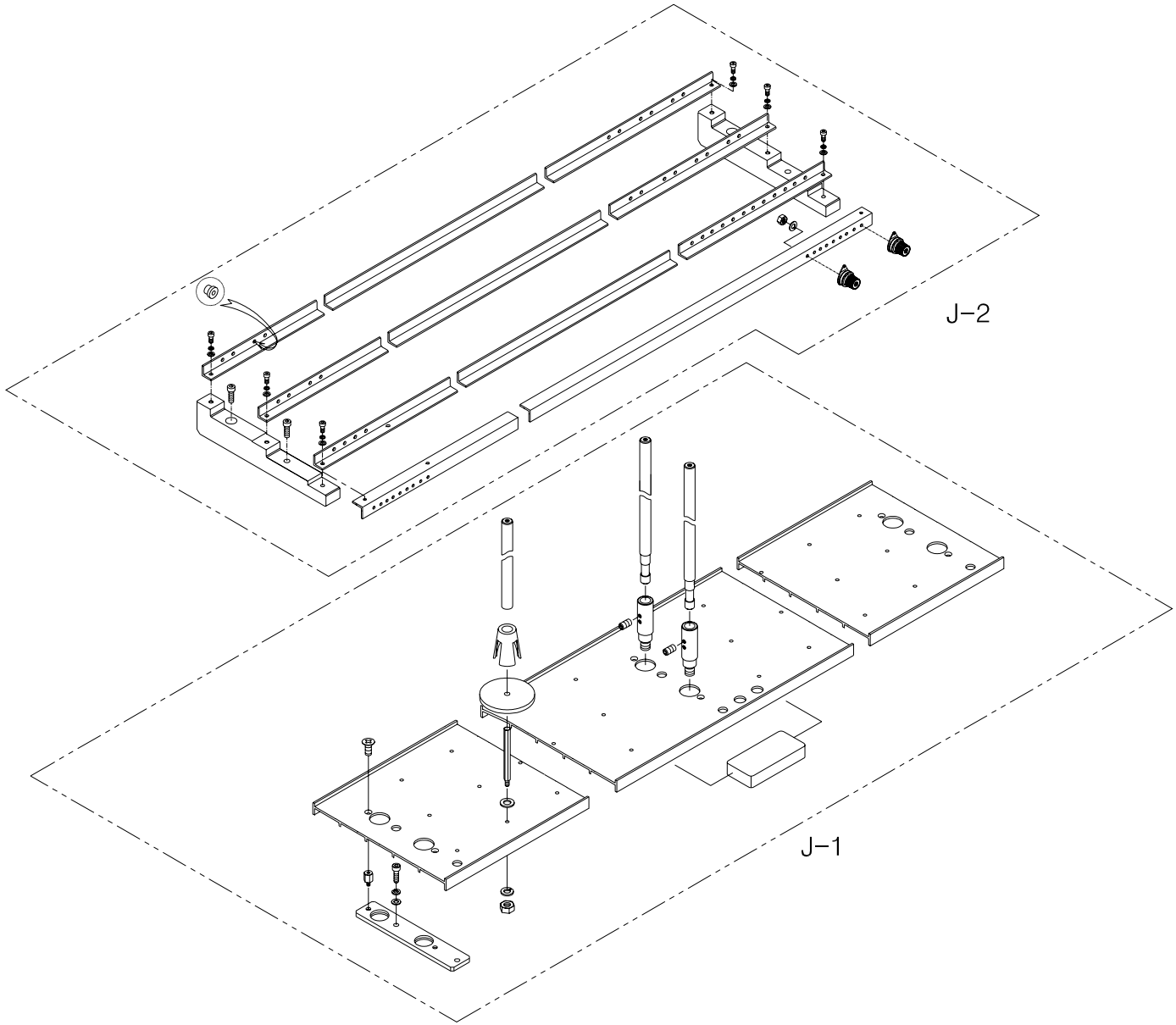

J-1

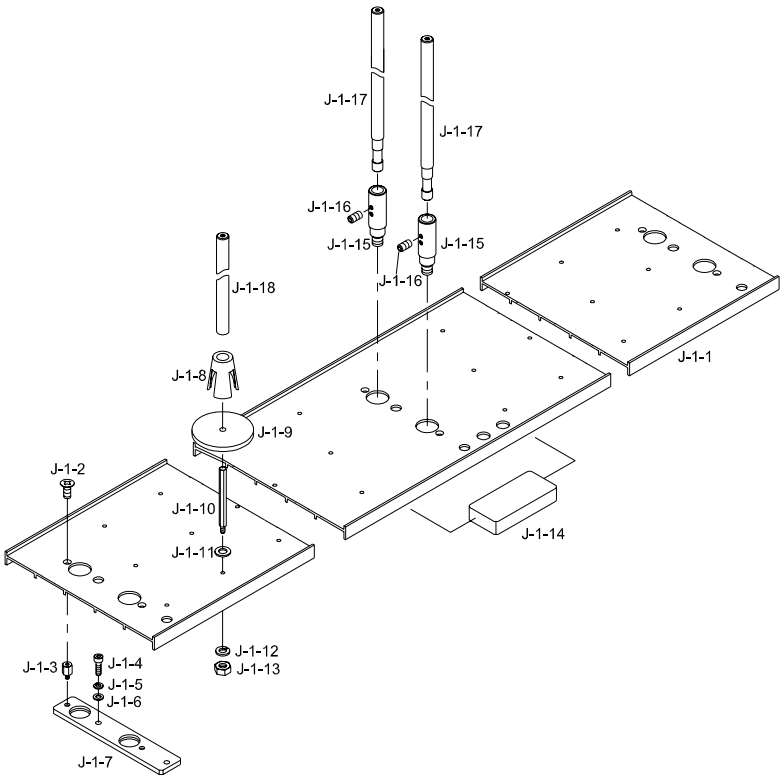

Note

Ref.No	Part No.	Part Name	Application date	Interchangeability	Hardware	Q'ty	Remarks
J-1-1	GP-004911-00	SPOOL PLATE L=880 UH1504D				2	
	05100105UH60	SPOOL PLATE L=1280 UH1506D					
	GP-004134-00	SPOOL PLATE L=1680 UH1208D					
	GP-005061-00	SPOOL PLATE L=2480 UH1512D					
J-1-2	02002SC-7119	PLUSS SCREW (M4*L8)			O	8	
J-1-3	11005CW-UK01	SPOOL PLATE FIXING BOLT M6*L21				16	
J-1-4	03016SC-4113	CAP FRAME SET SCREW				16	
J-1-5	18048SW-3115	SPRING WASHER (@5)			O	16	
J-1-6	18049SW-3111	WASHER (@5)			O	16	
J-1-7	12004PR-W121	SPOOL PLATE SUPPORT BASE				8	
J-1-8	12012PM-A001	SPOOL HOLDER				90	
J-1-9	12052SF-A001	SPOOL SPONGE				90	
J-1-10	13009SC-A001	COLOR CHANGE CAM GEAR SCREW				90	
J-1-11	18049SW-3111	WASHER (@5)			O	90	
J-1-12	18048SW-3115	SPRING WASHER (@5)			O	90	
J-1-13	12010SN-1211	HEX.NUT (M5)			O	90	
J-1-14	12033RB-UK01	CUSHION RUBBER				3	
J-1-15	01000500H000	SPOOL STAND STUD BOLT L113				16	
J-1-16	04014SC-4517	HEX.SOCKET SET SCREW(M5*L5)			O	32	
J-1-17	12015SF-A001	SPOOL STAND (L=330)				16	
J-1-18	10000100A000	THREAD GUIDE L=200				12	

J

J-2

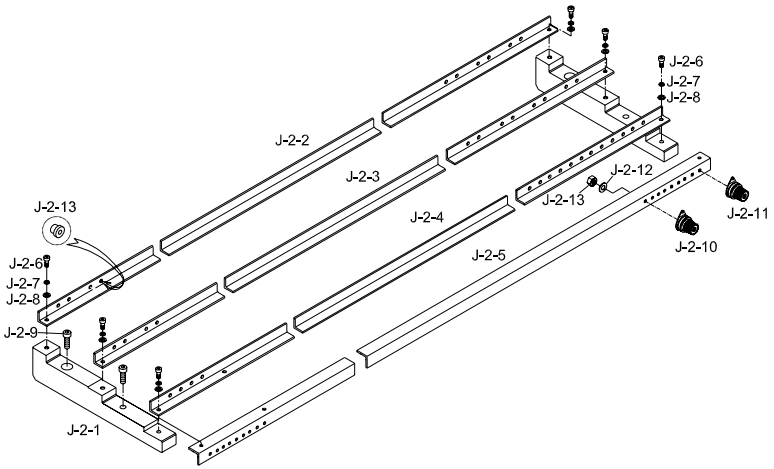

Note

Ref.No	Part No.	Part Name	Application date	Interchangeability	Hardware	Q'ty	Remarks
J-1-1	10600100H000	THREAD ANGLE FRAME				8	
J-1-2	GP-004913-00	THREAD ANGLE "A" L=820 UH1504D				2	
	05200105UH60	THREAD ANGLE "A" L=1220 UH1506D					
	GP-004135-00	THREAD ANGLE "A" L=1620 UH1208D	Aug,23,04 ~ Apr,15,08	X			
	GP-004135-01		Apr,16,08 ~	△			
	05200105UH00	THREAD ANGLE "A" L=2420 UH1512D					
J-1-3	GP-004914-00	THREAD ANGLE "B" L=820 UH1504D				2	
	05200205UH60	THREAD ANGLE "B" L=1220 UH1506D					
	GP-004136-00	THREAD ANGLE "B" L=1620 UH1208D	Aug,23,04 ~ Apr,15,08	X			
	GP-004136-01		Apr,16,08 ~	△			
	05200205UH00	THREAD ANGLE "B" L=2420 UH1512D					
J-1-4	GP-004915-00	THREAD ANGLE "C" L=820 UH1504D				2	
	05200305UH60	THREAD ANGLE "C" L=1220 UH1506D					
	GP-004137-00	THREAD ANGLE "C" L=1620 UH1208D	Aug,23,04 ~ Apr,15,08	X			
	GP-004137-01		Apr,16,08 ~	△			
	05200305UH00	THREAD ANGLE "C" L=2420 UH1512D					
J-1-5	GP-005006-00	THREAD ANGLE "D" L=820 UH1504D				2	
	05200405UH60	THREAD ANGLE "D" L=1220 UH1506D					
	GP-004138-00	THREAD ANGLE "D" L=1620 UH1208D	Aug,23,04 ~ Apr,15,08	X			
	GP-004138-01		Apr,16,08 ~	△			
	05200415UH00	THREAD ANGLE "D" L=2420 UH1512D					
J-1-6	02015SC-7113	HEX.SOCKET BOLT(M4*L10)			O	24	
J-1-7	02028SW-9115	SPRING WASHER (@4)			O	24	
J-1-8	06003SW-2111	WASHER (@4)			O	24	
J-1-9	03016SC-4113	CAP FRAME SET SCREW				16	
J-1-10	10600110B000	SUB TENSION ADJUSTING SET				84	
J-1-11	10600210B000	SUB TENSION ADJUSTING SET				6	
J-1-12	18048SW-3115	SPRING WASHER (@5)			O	90	
J-1-13	03031SN-A001	PIN. NUT (11/64,N=40)			O	90	
J-1-14	12042PM-A001	EYELET				180	

J

Table

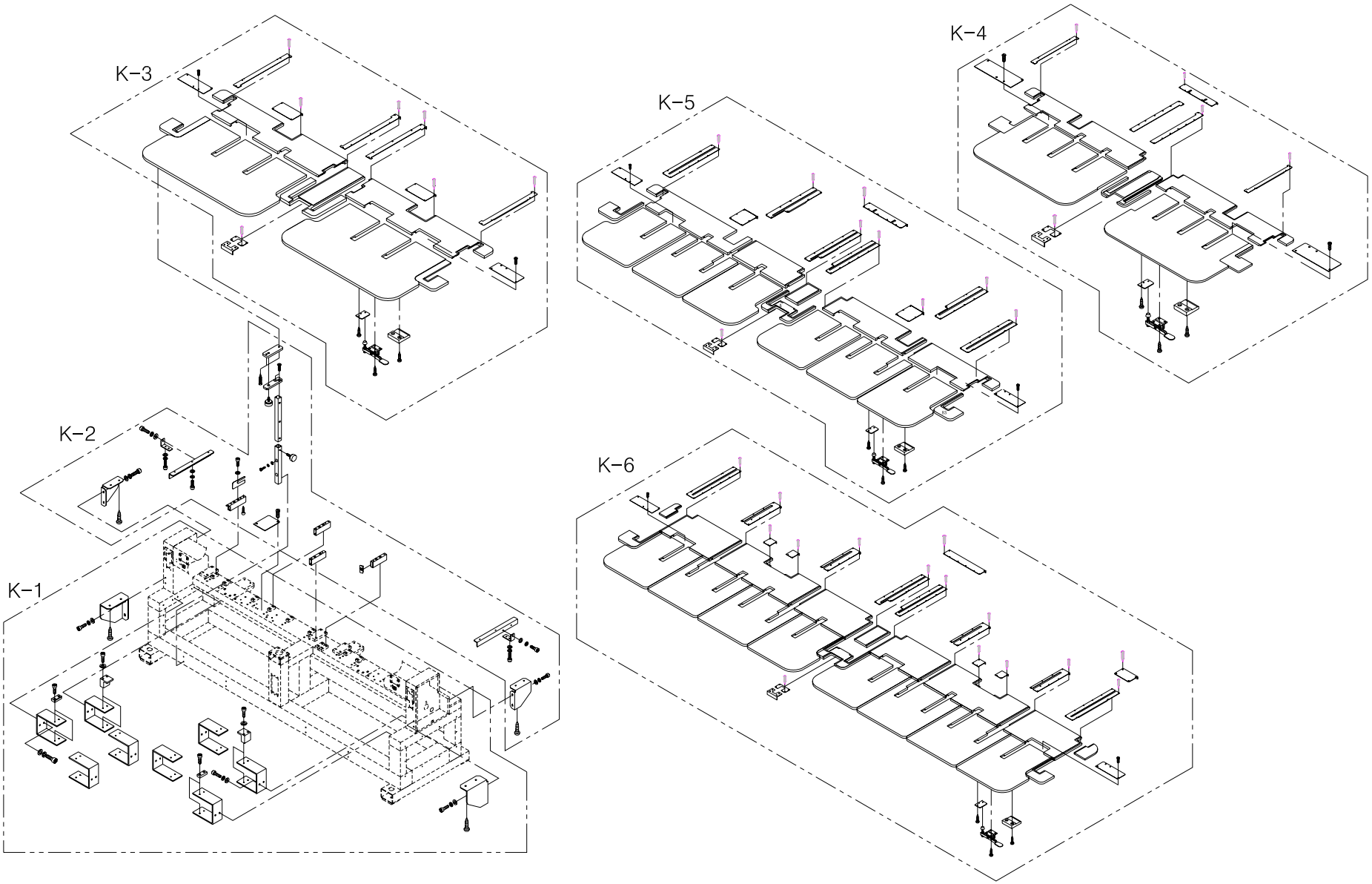

K-1

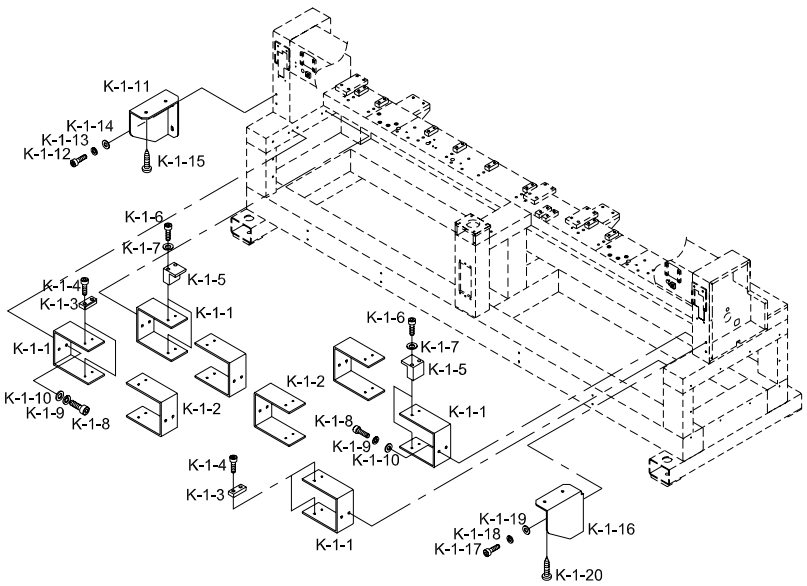

Note

Ref.No	Part No.	Part Name	Application date	Interchangeability	Hardware	Q'ty	Remarks
K-1-1	05002000UH60	MOVING TABLE FIXED PLATE A				4	
K-1-2	GP-004902-00	MOVING TABLE FIXED PLATE B				4	
K-1-3	GP-008799-00	Table Support (R)				2	
K-1-4	03016SC-4113	CAP FRAME SET SCREW			O	2	
K-1-5	16019SW-4115	SPRING WASHER (@5)			O	2	
K-1-6	16018SW-1111	WASHER (@5)			O	2	
K-1-7	16009SC-8330	TAPPING SCREW (M6*L20)			O	2	
K-1-8	08062SC-4113	HEX. SOCKET BOLT (M5*L20)			O	16	
K-1-9	16019SW-4115	SPRING WASHER (@5)			O	16	
K-1-10	16018SW-1111	WASHER (@5)			O	16	
K-1-11	GP-008800-00	Table Support (L)				1	
K-1-12	03016SC-4113	CAP FRAME SET SCREW				2	
K-1-13	16019SW-4115	SPRING WASHER (@5)			O	2	
K-1-14	16018SW-1111	WASHER (@5)			O	2	
K-1-15	16009SC-8330	TAPPING SCREW (M6*L20)			O	2	
K-1-16	GP-008799-00	Table Support (R)				1	
K-1-17	03016SC-4113	CAP FRAME SET SCREW				2	
K-1-18	16019SW-4115	SPRING WASHER (@5)			O	2	
K-1-19	16018SW-1111	WASHER (@5)			O	2	
K-1-20	16009SC-8330	TAPPING SCREW (M6*L20)			O	2	

K-2

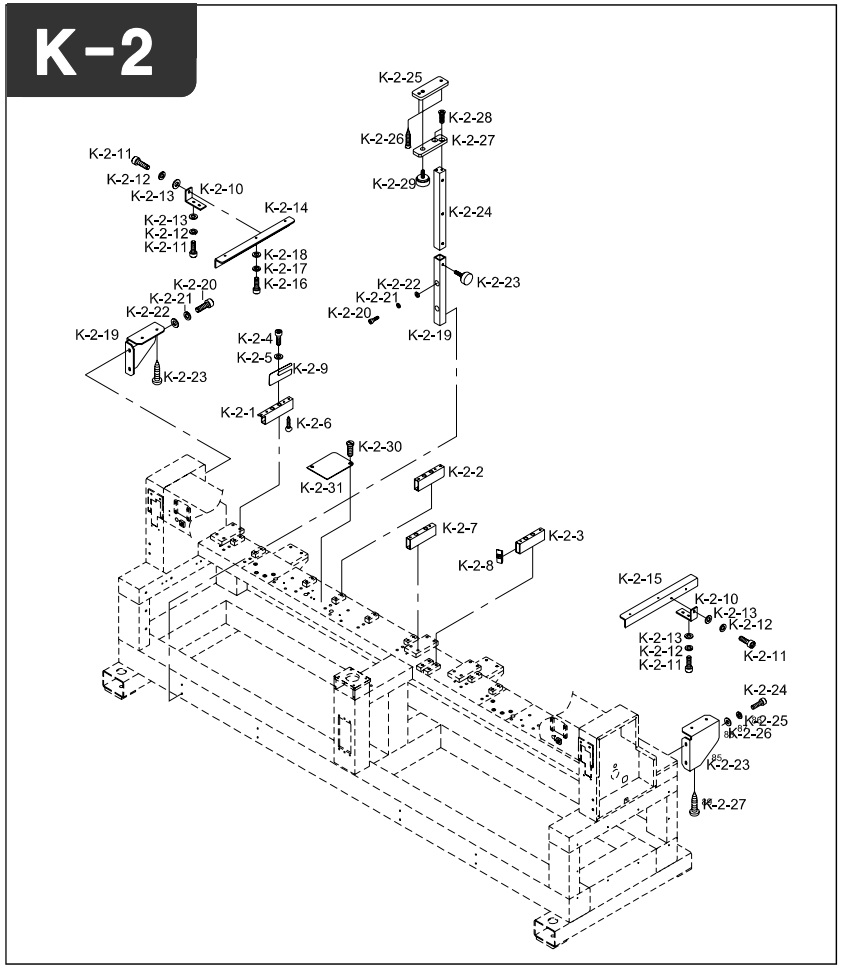

Note

Ref.No	Part No.	Part Name	Application date	Interchangeability	Hardware	Q'ty	Remarks
K-2-1	GP-004907-00	TABLE SUPPORT A	Sep,25,04 ~ Aug,10,06	X		4	
	GP-004907-01		Aug,11,06 ~	△		4	
K-2-2	GP-004908-00	TABLE SUPPORT B	Sep,25,04 ~ Aug,10,06	X		8	
	GP-004908-01		Aug,11,06 ~	△		8	
K-2-3	GP-008797-00	TABLE SUPPORT C	Apr,26,05 ~ Aug,10,06	X		10	
	GP-008797-01		Aug,11 ,06 ~	△		10	
K-2-4	16009SC-4113	HEX.SOCKET BOLT(M10*L25)			O	54	
K-2-5	16029SW-4115	SPRING WASHER (10@)			O	54	
K-2-6	16009SC-8330	TAPPING SCREW (M6*L20)			O	74	
K-2-7	GP-010695-00	TABLE SUPPORT B	Jul,18,05 ~ Aug,10,06	X		2	
	GP-010695-01		Aug,11,06 ~	△		2	
K-2-8	16005RB-A001	Table Support End Cap(L)				28	
K-2-9	05001700U000	TABLE SUPPORT PLATE				32	
K-2-10	05001500UK40	ANGLE SUPPORT				8	
K-2-11	08076SC-4113	HEX. SOCKET BOLT (M5*L12)			O	16	
K-2-12	16019SW-4115	SPRING WASHER (@5)			O	16	
K-2-13	16018SW-1111	WASHER (@5)			O	16	
K-2-14	05010400U000	TABLE SUPPORTER (B2) L=402				2	
K-2-15	05010400U000	TABLE SUPPORTER (B2) L=402				2	
K-2-16	08076SC-4113	HEX. SOCKET BOLT (M5*L12)			O	16	
K-2-17	16019SW-4115	SPRING WASHER (@5)			O	16	
K-2-18	16018SW-1111	WASHER (@5)			O	16	
K-2-19	16052AD-UK01	TABLE SUPPORT GUIDE				4	
K-2-20	02015SC-7113	Hex.Socket Bolt(M4*L10)			O	8	
K-2-21	02028SW-9115	Spring Washer (@4)			O	8	
K-2-22	05009SW-1111	Washer (@4-L)			O	8	
K-2-23	17062SC-UK01	Table Support Stopper Screw			O	4	
K-2-24	05001300U000	TABLE SUPPORT L=263				4	
K-2-25	16061PR-UK01	TABLE SUPPORT PLATE (A)				4	
K-2-26	17012SC-8329	Hex. Socket Set Screw(M4*L16)			O	8	
K-2-27	16058AD-UK01	TABLE SUPPORT PLATE (B)				4	
K-2-28	15089SC-7119	C.S Screw (M4*L12)			O	8	
K-2-29	17063SC-UK01	Table Support Stopper Screw			O	4	
K-2-30	16016PR-UK01	GEAR COVER				3	
K-2-31	02030SC-T121	BED COVER SCREW(9/64" 40)				6	

K-3

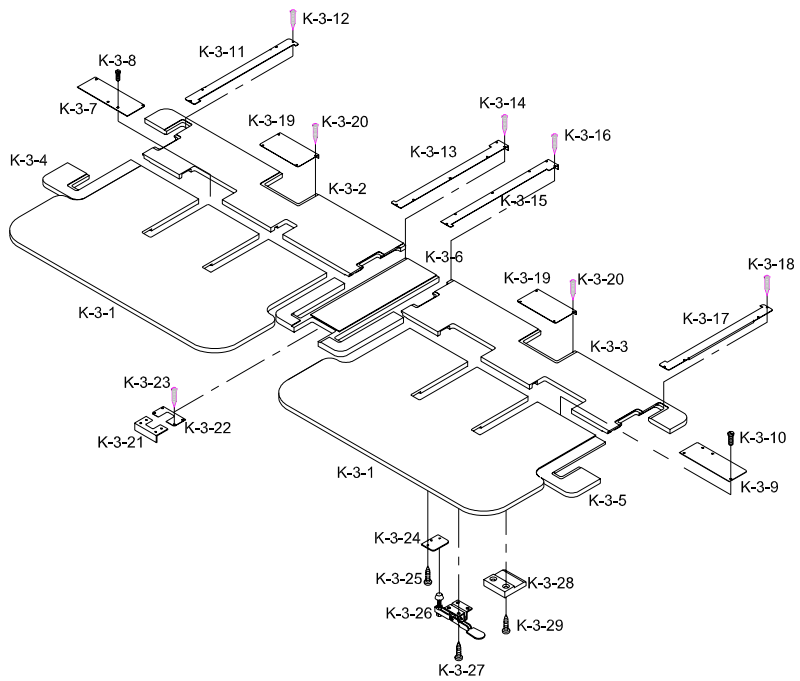

Note

Ref.No	Part No.	Part Name	Application date	Interchangeability	Hardware	Q'ty	Remarks
K-3-1	GP-004901-00	MOVABLE TABLE	Sep,25,04 ~ Apr,25,05	X		2	
	GP-004901-01		Apr,26,05 ~	X		2	
K-3-2	GP-004896-00	FIXED TABLE "A"	Sep,25,04 ~ Apr,25,05	X		1	
	GP-004896-01		Apr,26,05 ~	X		1	
K-3-3	GP-004897-00	FIXED TABLE "B"	Sep,25,04 ~ Apr,25,05	X		1	
	GP-004897-01		Apr,26,05 ~	X		1	
K-3-4	GP-004898-00	FIXED TABLE "C"	Sep,25,04 ~ Apr,25,05	X		1	
	GP-004898-01		Apr,26,05 ~	X		1	
K-3-5	GP-004899-00	FIXED TABLE "D"	Sep,25,04 ~ Apr,25,05	X		1	
	GP-004899-01		Apr,26,05 ~	X		1	
K-3-6	GP-004900-00	FIXED TABLE "E"	Sep,25,04 ~ Apr,25,05	X		1	
	GP-004900-01		Apr,26,05 ~	X		2	
K-3-7	16018PR-UK01	MES CAM DRIVING BOX COVER				2	
K-3-8	02030SC-T121	BED COVER SCREW(9/64" 40)			O	8	
K-3-9	05001400UH60	THREAD CUTTING BOX COVER B				1	
K-3-10	02030SC-T121	BED COVER SCREW(9/64" 40)			O	4	
K-3-11	GP-004903-00	Y-LM Guide Cover A				1	
K-3-12	08101SC-8329	TAPPING SCREW (M3*L16)			O	4	
K-3-13	GP-004904-00	Y-LM Guide Cover B				1	
K-3-14	08101SC-8329	TAPPING SCREW (M3*L16)			O	6	
K-3-15	GP-004905-00	Y-LM Guide Cover C				1	
K-3-16	08101SC-8329	TAPPING SCREW (M3*L16)			O	4	
K-3-17	GP-004906-00	Y-LM Guide Cover D				1	
K-3-18	08101SC-8329	TAPPING SCREW (M3*L16)			O	6	
K-3-19	GP-004910-00	Y-MOTOR COVER				2	
K-3-20	08101SC-8329	TAPPING SCREW (M3*L16)			O	8	
K-3-21	05002400UH60	OP Holder Support Cover (A)				1	
K-3-22	GP-004909-00	OP Holder Support Cover (B)	Sep,25,04 ~ Jun,30,05	X		1	
	GP-004909-01		Jul,01,05 ~	X		1	
K-3-23	08101SC-8329	TAPPING SCREW (M3*L16)			O	4	
K-3-24	16065PR-UK01	CLAMP PLATE				4	
K-3-25	16009SC-8330	Tapping Screw (M6*L20)			O	12	
K-3-26	16067ET-UK01	TABLE TOGGLE CLAMP				12	
K-3-27	16009SC-8330	Tapping Screw (M6*L20)			O	48	
K-3-28	16063PM-UK01	TABLE HOLDING BLOCK				4	
K-3-29	16009SC-8330	TAPPING SCREW (M6*L20)			O	8	
K-3-30	16016PR-UK01	GEAR COVER				3	
K-3-31	02030SC-T121	BED COVER SCREW(9/64" 40)			O	6	

K-4

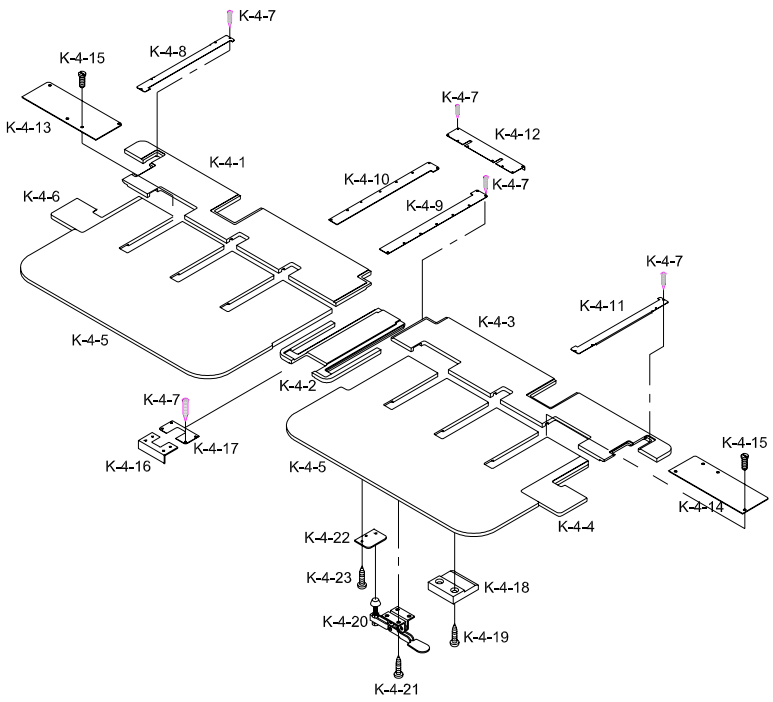

Note

Ref.No	Part No.	Part Name	Application date	Interchangeability	Hardware	Q'ty	Remarks
K-4-1	GP-007532-00	FIXED TABLE "A"	Feb,05,05 ~ Jul,13,05	X		1	
	GP-007532-01		Jul,14,05 ~ Oct,18,05	X		1	
	GP-007532-02		Oct,19,05 ~	X		1	
K-4-2	GP-007533-00	FIXED TABLE "B"	Feb,05,05 ~ Jul,13,05	X		1	
	GP-007533-01		Jul,14,05 ~	X		1	
K-4-3	GP-007534-00	FIXED TABLE "C"	Feb,05,05 ~ Jul,13,05	X		1	
	GP-007534-01		Jul,14,05 ~ Oct,18,05	X		1	
	GP-007534-02		Oct,19,05 ~	X		1	
K-4-4	GP-007535-00	FIXED TABLE "D"				1	
K-4-5	08000100UH60	Movable Table				2	
K-4-6	GP-004898-00	FIXED TABLE "C"	Sep,25,04 ~ Apr,25,05	X		1	
	GP-004898-01		Apr,26,05 ~	X		1	
K-4-7	08101SC-8329	TAPPING SCREW (M3*L16)			O	68	
K-4-8	GP-004903-00	Y-LM GUIDE COVER A				1	
K-4-9	GP-007536-00	Y-LM GUIDE COVER B				1	
K-4-10	GP-007535-00	Y-LM GUIDE COVER C				1	
K-4-11	GP-003757-00	Y-LM Guide Cover D				1	
K-4-12	GP-007537-00	COUPLING COVER	Feb,05,05 ~ Oct,18,05	X		2	
	GP-007537-01		Oct,19,05 ~	X		2	
K-4-13	16018PR-UK01	MES CAM DRIVING BOX COVER				2	
K-4-14	05001400UH60	THREAD CUTTING BOX COVER B				1	
K-4-15	02030SC-T121	BED COVER SCREW(9/64" 40)			O	8	
K-4-16	05002400UH60	OP Holder Support Cover (A)				1	
K-4-17	05002500UH60	OP Holder Support Cover (B)				1	
K-4-18	16063PM-UK01	TABLE HOLDING BLOCK				7	
K-4-19	16009SC-8330	TAPPING SCREW (M6*L20)			O	14	
K-4-20	16067ET-UK01	TABLE TOGGLE CLAMP				8	
K-4-21	19002SC-1330	TAPPING SCREW (4*L16-NO1)			O	32	
K-4-22	16065PR-UK01	CLAMP PLATE				4	
K-4-23	16009SC-8330	TAPPING SCREW (M6*L20)			O	12	

K-5

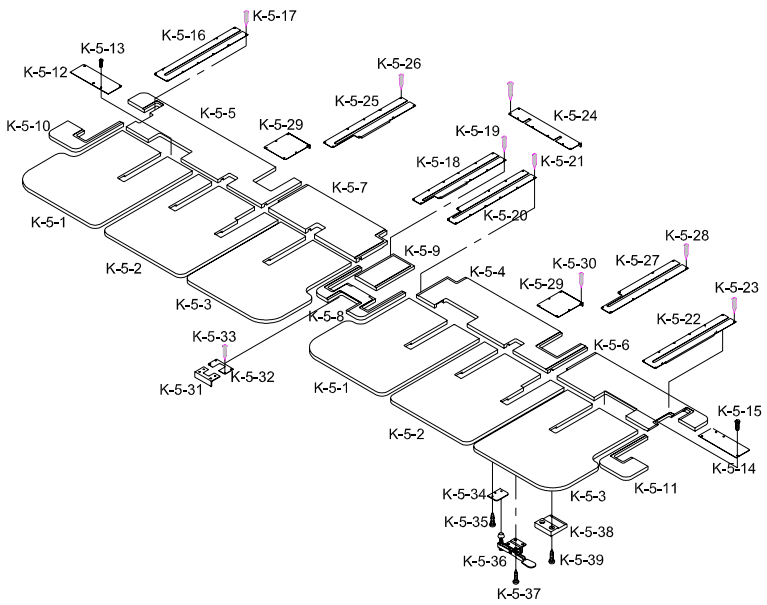

Note

Ref.No	Part No.	Part Name	Application date	Interchangeability	Hardware	Q'ty	Remarks
K-5-1	GP-004116-00	MOVABLE TABLE "A"				2	
K-5-2	GP-004117-00	MOVABLE TABLE "B"	Aug,23,04 ~ Apr,26,05	X		2	
	GP-004117-01		Apr,27,05 ~ Aug,31,05	X		2	
	GP-004117-02		Sep,01,05 ~	X		2	
K-5-3	GP-004118-00	MOVABLE TABLE "C"				2	
K-5-4	GP-004119-00	FIXED TABLE "A"	Aug,23,04 ~ Apr,26,05	X		1	
	GP-004119-01		Apr,27,05 ~	X		1	
K-5-5	GP-008894-00	FIXED TABLE "B"				1	
K-5-6	GP-004120-00	FIXED TABLE "C"	Aug,23,04 ~ Apr,26,05	X		1	
	GP-004120-01		Apr,27,05 ~	X		1	
K-5-7	GP-004121-00	FIXED TABLE "D"	Aug,23,04 ~ Apr,26,05	X		1	
	GP-004121-01		Apr,27,05 ~	X		1	
K-5-8	GP-008895-00	FIXED TABLE "H"	Apr,27,05 ~ Jul,19,05	X		1	
	GP-008895-01		Jul,20,05 ~	X		1	
K-5-9	GP-008900-00	FIXED TABLE "I"				1	
K-5-10	GP-004120-00	FIXED TABLE "C"	Aug,23,04 ~ Apr,26,05	X		1	
	GP-004120-01		Apr,27,05 ~	X		1	
K-5-11	16005RB-A001	Fixed Table "D"(3X3공용)				1	
K-5-12	16018PR-UK01	MES CAM DRIVING BOX COVER				2	
K-5-13	02030SC-T121	BED COVER SCREW(9/64" 40)			O	8	
K-5-14	05001400UH60	THREAD CUTTING BOX COVER B				1	
K-5-15	02030SC-T121	BED COVER SCREW(9/64" 40)			O	4	
K-5-16	GP-004127-00	Y-LM Guide Cover A				1	
K-5-17	08101SC-8329	TAPPING SCREW (M3*L16)			O	10	
K-5-18	GP-004129-00	Y-LM Guide Cover C				1	
K-5-19	08101SC-8329	TAPPING SCREW (M3*L16)			O	11	
K-5-20	GP-004130-00	Y-LM Guide Cover D				1	
K-5-21	08101SC-8329	TAPPING SCREW (M3*L16)			O	11	
K-5-22	GP-004131-00	Y-LM Guide Cover E				1	
K-5-23	08101SC-8329	TAPPING SCREW (M3*L16)			O	10	
K-5-24	GP-004132-00	COUPLING COVER				2	
K-5-25	GP-008898-00	Y-LM GUIDE COVER C				1	
K-5-26	08101SC-8329	TAPPING SCREW (M3*L16)			O	9	
K-5-27	GP-008899-00	Y-LM GUIDE COVER D				1	
K-5-28	08101SC-8329	TAPPING SCREW (M3*L16)			O	9	
K-5-29	GP-007514-00	Y-Driving Box Cover B				2	
K-5-30	08101SC-8329	TAPPING SCREW (M3*L16)			O	12	

K-5

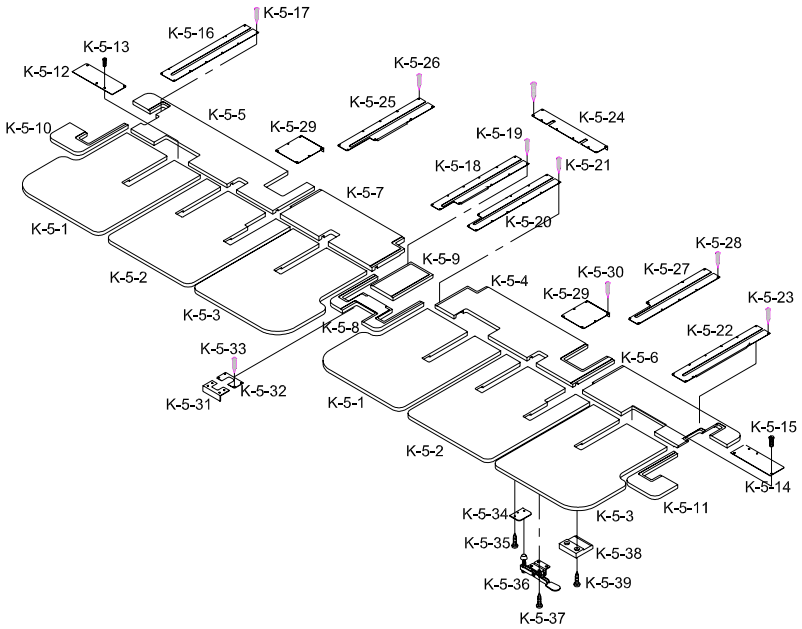

Note

Ref.No	Part No.	Part Name	Application date	Interchangeability	Hardware	Q'ty	Remarks
K-5-31	05002400UH60	OP Holder Support Cover (A)				1	
K-5-32	05002500UH60	OP Holder Support Cover (B)				1	
K-5-33	08101SC-8329	TAPPING SCREW (M3*L16)			O	4	
K-5-34	16065PR-UK01	CLAMP PLATE				4	
K-5-35	16009SC-8330	Tapping Screw (M6*L20)			O	12	
K-5-36	16067ET-UK01	TABLE TOGGLE CLAMP				12	
K-5-37	16009SC-8330	Tapping Screw (M6*L20)			O	48	
K-5-38	16063PM-UK01	TABLE HOLDING BLOCK				4	
K-5-39	16009SC-8330	TAPPING SCREW (M6*L20)			O	8	

K-6

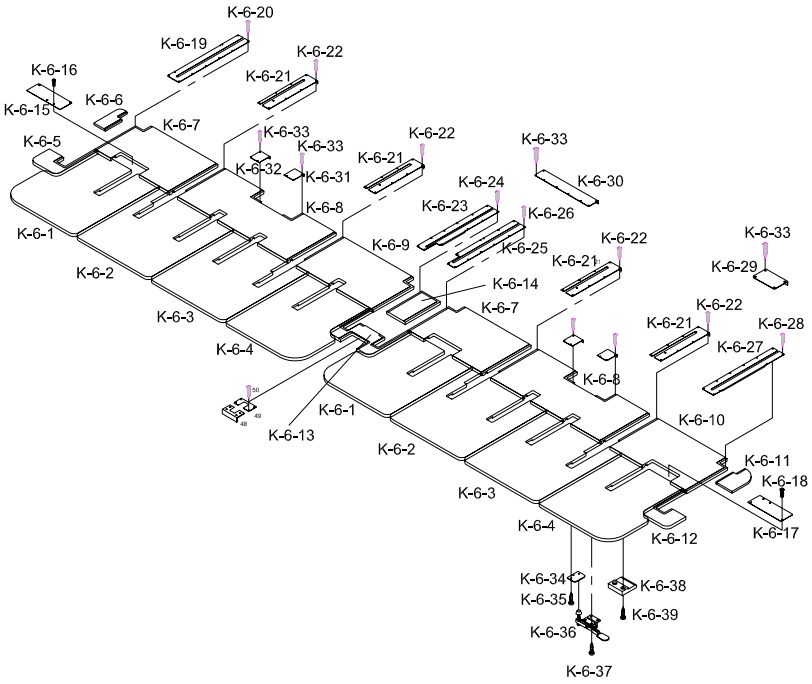

Note

Ref.No	Part No.	Part Name	Application date	Interchangeability	Hardware	Q'ty	Remarks
K-6-1	GP-005174-00	MOVABLE TABLE "A"				2	
K-6-2	GP-005175-00	MOVABLE TABLE "B"				2	
K-6-3	GP-005176-00	MOVABLE TABLE "C"				2	
K-6-4	GP-005177-00	MOVABLE TABLE "D"				2	
K-6-5	GP-004119-00	FIXED TABLE "A"	Aug,23,04 ~ Apr,26,05	X		1	
	GP-004119-01		Apr,27,05	**X**		1	
K-6-6	05000200NH60	FIXED TABLE "B"				1	
K-6-7	GP-005058-00	FIXED TABLE "C"	Aug,23,04 ~ Apr,26,05	X		2	
	GP-005058-01		Apr,27,05	**X**		2	
K-6-8	GP-005059-00	FIXED TABLE "D"				2	
K-6-9	GP-004121-00	FIXED TABLE "E"	Aug,23,04 ~ Apr,26,05	X		1	
	GP-004121-01		Apr,27,05 ~	X		1	
K-6-10	GP-004122-00	FIXED TABLE "F"				1	
K-6-11	05000700NH60	FIXED TABLE "G"				1	
K-6-12	GP-004123-00	FIXED TABLE "H"				1	
K-6-13	GP-004124-00	FIXED TABLE "I"				1	
K-6-14	GP-004125-00	FIXED TABLE "J"				1	
K-6-15	16018PR-UK01	MES CAM DRIVING BOX COVER				2	
K-6-16	02030SC-T121	BED COVER SCREW(9/64" 40)			O	8	
K-6-17	05001400UH60	THREAD CUTTING BOX COVER B				1	
K-6-18	02030SC-T121	BED COVER SCREW(9/64" 40)			O	4	
K-6-19	GP-004127-00	Y-LM Guide Cover A				1	
K-6-20	08101SC-8329	TAPPING SCREW (M3*L16)			O	10	
K-6-21	GP-004128-00	Y-LM Guide Cover B	Aug,23,04 ~ Apr,26,05	X		4	
	GP-004128-01		Apr,27,05	**X**		4	
K-6-22	08101SC-8329	TAPPING SCREW (M3*L16)			O	64	
K-6-23	GP-004129-00	Y-LM Guide Cover C				1	
K-6-24	08101SC-8329	TAPPING SCREW (M3*L16)			O	11	
K-6-25	GP-004130-00	Y-LM Guide Cover D				1	
K-6-26	08101SC-8329	TAPPING SCREW (M3*L16)			O	11	
K-6-27	GP-004131-00	Y-LM Guide Cover E				1	
K-6-28	08101SC-8329	TAPPING SCREW (M3*L16)			O	10	
K-6-29	05001800UH60	COUPLING COVER A				2	
K-6-30	GP-004132-00	COUPLING COVER B				1	
K-6-31	05000120UH80	Y-MOTOR COUPLING COVER R				2	
K-6-32	05000110UH80	Y-MOTOR COUPLING COVER L				2	
K-6-33	08101SC-8329	TAPPING SCREW (M3*L16)			O	16	

K-6

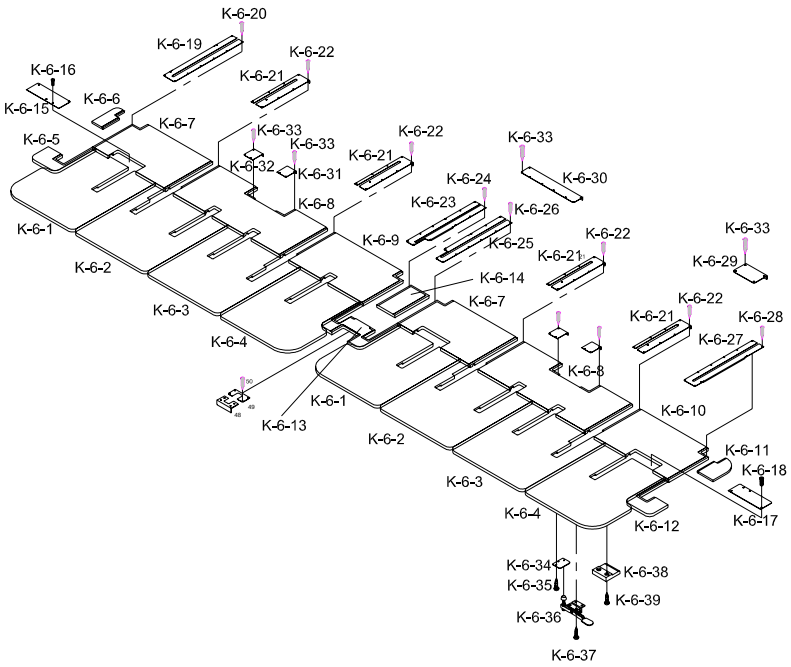

Note

Ref.No	Part No.	Part Name	Application date	Interchangeability	Hardware	Q'ty	Remarks
K-6-34	16065PR-UK01	CLAMP PLATE				4	
K-6-35	16009SC-8330	Tapping Screw (M6*L20)			O	12	
K-6-36	16067ET-UK01	TABLE TOGGLE CLAMP				12	
K-6-37	16009SC-8330	Tapping Screw (M6*L20)			O	48	
K-6-38	16063PM-UK01	TABLE HOLDING BLOCK				4	
K-6-39	16009SC-8330	TAPPING SCREW (M6*L20)			O	8	

Cable

L-3

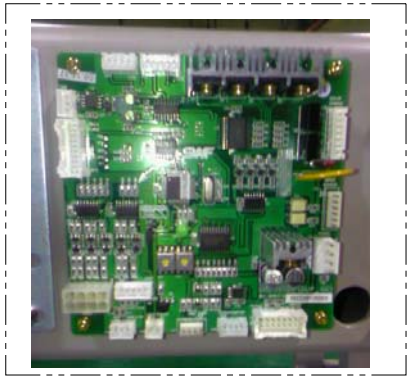

L-4

L-5

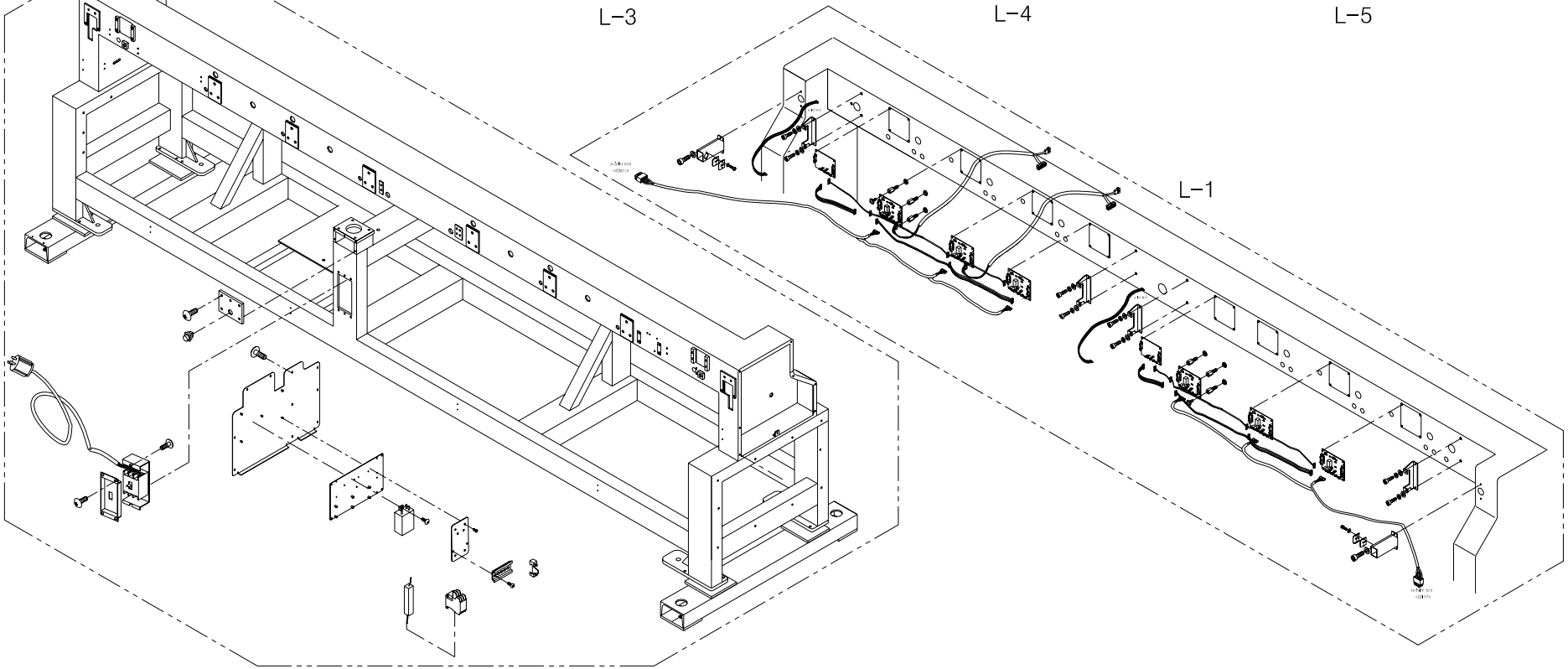

L-1

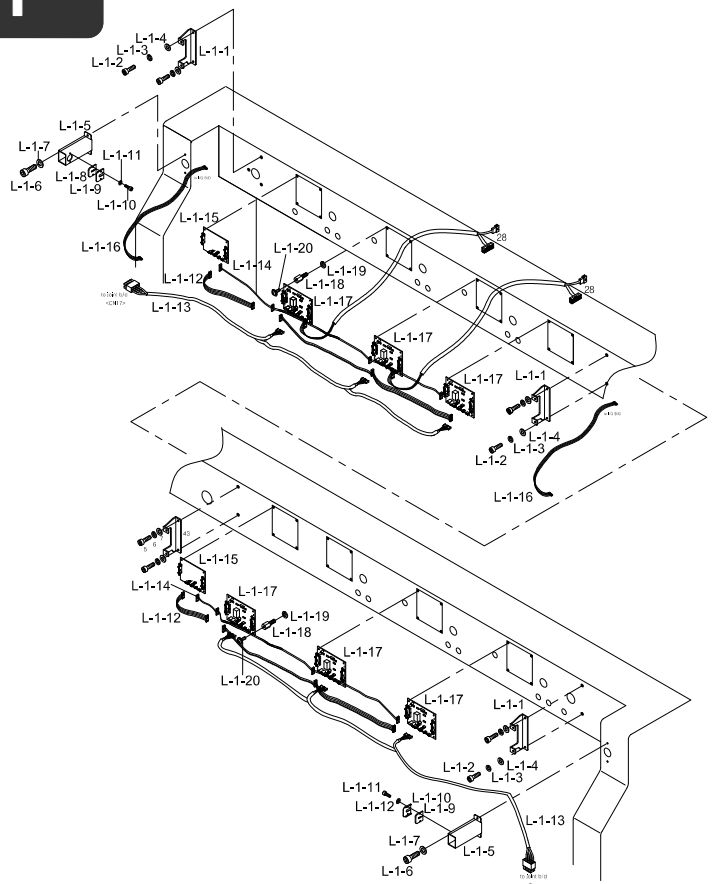

Note

Ref.No	Part No.	Part Name	Application date	Interchangeability	Hardware	Q'ty	Remarks
L-1-1	02000400B000	CABLE COVER HOLDER				4	
L-1-2	08076SC-7113	Hex. Socket Bolt (M5*L12)			O	8	
L-1-3	18048SW-3115	Spring Washer (@5)			O	8	
L-1-4	16018SW-1111	Washer (@5)			O	8	
L-1-5	01002600UH60	X-MOTOR CABLE HOLDER				2	
L-1-6	08076SC-7113	Hex. Socket Bolt(M5*L12)			O	4	
L-1-7	16018SW-1111	Washer (@5)			O	4	
L-1-8	02054RB-UK01	Clamp Rubber				2	
L-1-9	02053PR-UK01	Cable Clamp				2	
L-1-10	18013AF-7113	Hex. Socket Bolt(M4*L10)			O	2	
L-1-11	18049SW-3111	Washer (@5)			O	2	
L-1-12	02105700U040	Cable (Sh-57-2)				2	
L-1-13	02105610U040	Sh-56-2				2	
L-1-14	02106000U040	Cable (Sh-60-2)				2	
L-1-15	BD-000310-00	Color Change Board	Dec,05,05 ~ Apr,25,06	X		2	
	BD-000310-01		Apr,26,06 ~ Jun,18,06	△		2	
	BD-000310-02		Jun,19,06 ~ Jul,24,06	△		2	
	BD-000310-03		Jul,25,06 ~ Aug,27,06	△		2	
	BD-000310-04		Aug,28,06 ~ Sep,24,06	△		2	
	BD-000310-05		Sep,25,06 ~ Oct,19,06	△		2	
	BD-000310-06		Oct,20,06 ~ Feb,04,07	△		2	
	BD-000310-07		Feb,05,07 ~ Dec,20,07	△		2	
	BD-000310-08		Dec,21,07 ~ Jan,15,08	△		2	
	BD-000310-09		Jan,16,08 ~ Apr,20,08	△		2	
	BD-000310-10		Apr,21,08 ~ Jan,23,09	△		2	
	BD-000310-11		Jan,23,09 ~ Sep,03,09	△		2	
	BD-000310-12		Sep,03,09 ~ Nov,17,09	△		2	
	BD-000310-13		Nov,17,09 ~ Dec,14,09	△		2	
	BD-000310-14		Dec,14,09 ~	△		2	
L-1-16	02105900U000	Sh-59				2	
L-1-17	BD-000232-00	Thread Sensing Board	Aug,16,05 ~ Sep,29,05	X		6	
	BD-000232-01		Sep,30,05 ~ Nov,02,05	△			
	BD-000232-02		Nov,03,05 ~ Jan,31,06	△			
	BD-000232-03		Feb,01,06 ~ Apr,25,06	△			
	BD-000232-04		Apr,26,06 ~ Jun,30,06	△			
	BD-000232-05		Jul,01,06 ~ Jul,14,06	△			
	BD-000232-06		Jul,15,06 ~ Sep,18,06	△			
	BD-000232-07		Sep,19,06 ~ Oct,19,06	△			
	BD-000232-08		Oct,20,06 ~ Sep,09,07	△			
	BD-000232-09		Sep,10,07 ~ Dec,12,07	△			
	BD-000232-10		Dec,13,07 ~ Dec,20,12	△			

L-1

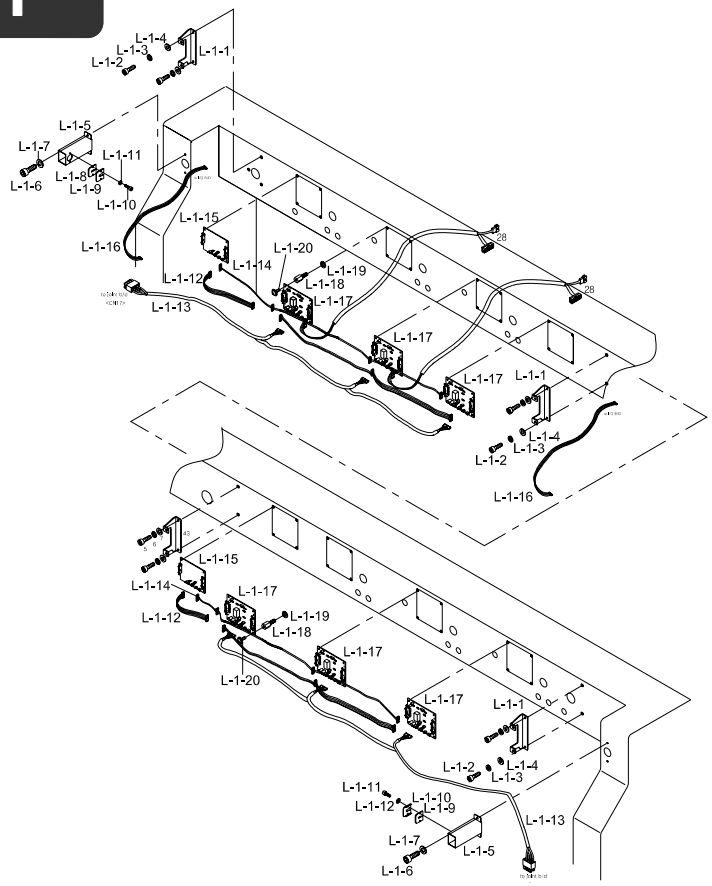

Note

Ref.No	Part No.	Part Name	Application date	Interchangeability	Hardware	Q'ty	Remarks
L-1-17	BD-000232-11	Thread Sensing Board	Dec,21,07 ~ Jul,29,08	△		6	
	BD-000232-12		Jul,30,08 ~ Aug,13,08	△		6	
	BD-000232-13		Aug,14,08 ~ Dec,11,08	△		6	
	BD-000232-14		Dec,12,08 ~	△		6	
L-1-18	11049SC-A001	Board Stud Bolt				24	
L-1-19	18048SW-3115	Spring Washer (@5)			O	24	
L-1-20	18154SC-9134	PLUS SCREW (M3*L8)			O	24	

L

L-2

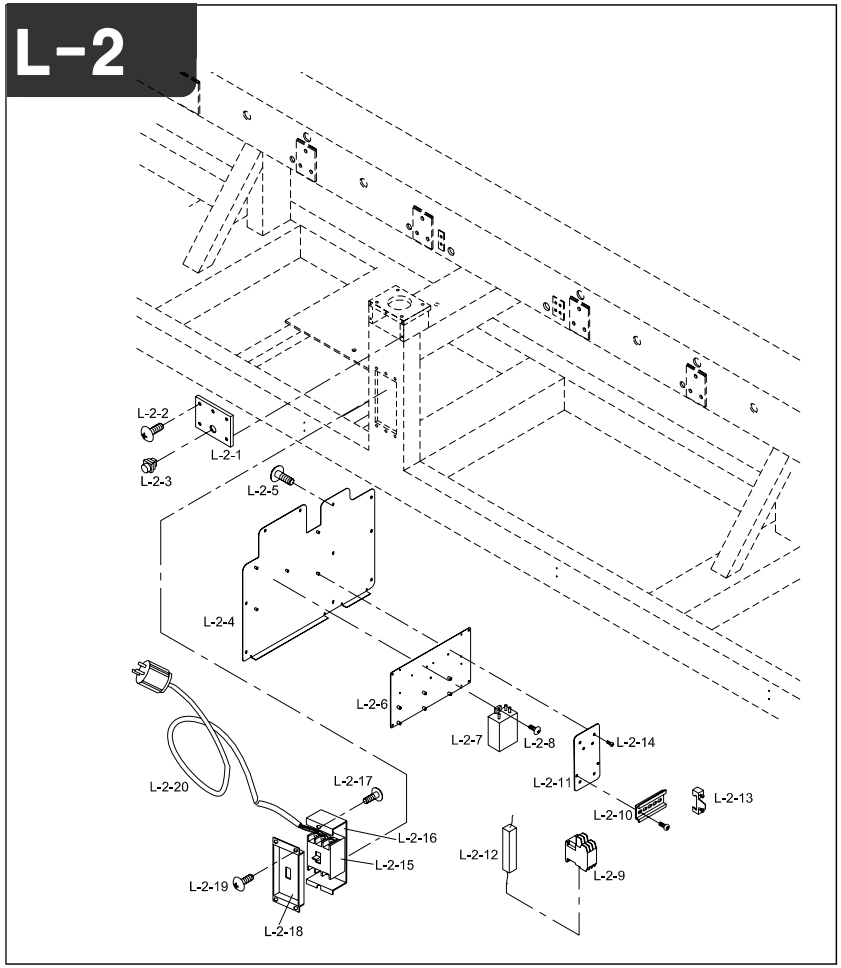

Note

Ref.No	Part No.	Part Name	Application date	Interchangeability	Hardware	Q'ty	Remarks
L-2-1	GP-010770-00	Bracket For I/O s/w(A)				1	
L-2-2	02044SC-3123	TRUSS SCREW (M5*L8)			O	5	
L-2-3	02000700T000	Push B/T Switch				1	
L-2-4	GP-016756-00	BODY INSIDE COVER D				1	
L-2-5	02044SC-3123	TRUSS SCREW (M5*L8)			O	40	
L-2-6	09000600UH60	M/C STARTING BRACKET				1	
L-2-7	GP-007476-00	Noise Filter				1	
L-2-8	20042SC-9134	PLUS SCREW (M4*L6)			O	2	
L-2-9	EP-000142-00	MAGNETIC SWITCH SET				2	
L-2-10	02000910T000	MAGNETIC S/W FIXED BRACKET				2	
L-2-11	02001100T000	SWITCH PLATE				2	
L-2-12	02001200T000	RESISTER 5/20W (CE)				2	
L-2-13	02001300T000	BRACKET STOPPER (CE)				4	
L-2-14	02010SC-3123	TRUSS SCREW (M4*L8)			O	16	
L-2-15	29001EL-A001	MAIN POWER S/W (ABE53BF-30A)			O	1	
L-2-16	02037PR-A001	MAIN POWER S/W BRACKET				1	
L-2-17	02038SC-9131	PLUS SCREW (M5*L10)			O	2	
L-2-18	02043PR-A001	MAIN POWER S/W COVER				1	
L-2-19	02044SC-3123	TRUSS SCREW (M5*L8)			O	4	
L-2-20	02100100UH60	MAIN CALBE				1	

L-3

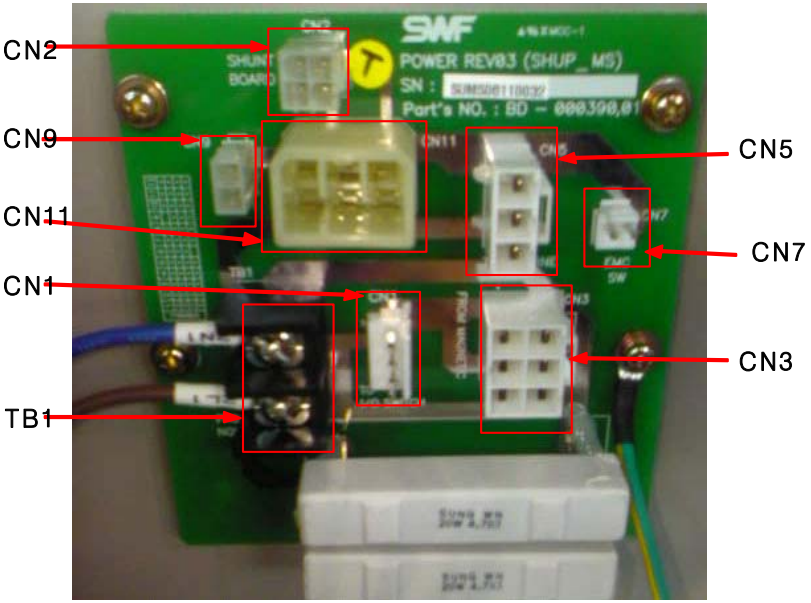

Note

Ref.No	Part No.	Part Name	Application date	Interchangeability	Hardware	Q'ty	Remarks
	CN1	TO I/O SWITCH					
	CN2	SHUNT BOARD					
	CN3	FROM MAGNETIC S/W					
	CN4	Not used					
	CN5	TO MACHINE					
	CN6	Not used					
	CN7	EMERGENCY S/W					
	CN8	Not used					
	CN9	MS1					
	CN10	Not used					
	CN11	SMPS					
	CN12	Not used					
	TB1	FROM NOISE FILTER					

L

L-4

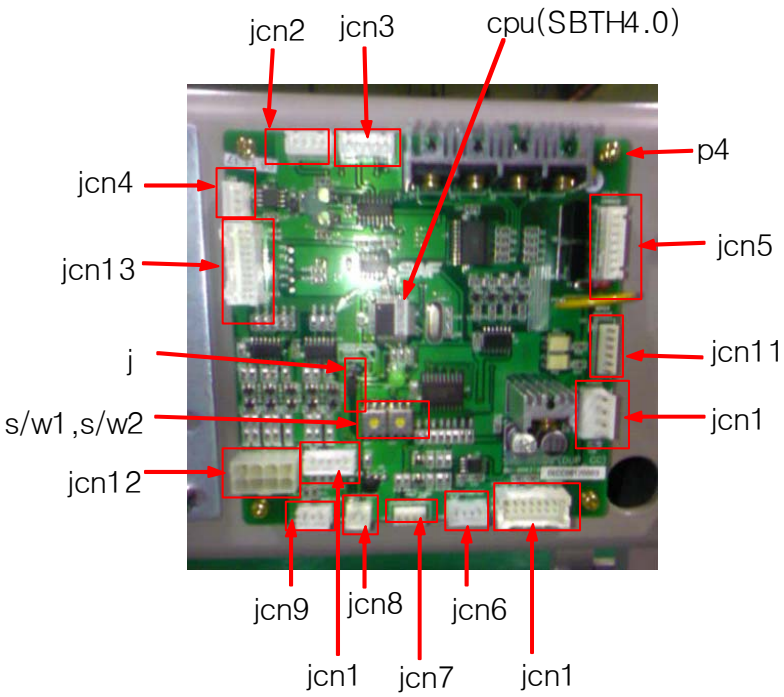

Note

Ref.No	Part No.	Part Name	Application date	Interchangeability	Hardware	Q'ty	Remarks
	JCN1	POWER					
	JCN2	COM					
	JCN3	ICD2					
	JCN4	CAN CABLE					
	JCN5	COLOR CHANGE					
	JCN6	POTENTIOMETER					
	JCN7	HALF TURN					
	JCN8	LASER POINTER					
	JCN9	BAR S/W					
	JCN10	ENCORDER IN					
	JCN11	WIPER SENSOR					
	JCN12	8H-NP					
	JCN13	BACK PLANE					
	JCN14	8H-C/C DRIVER					
	S/W1	8로 SETTING					
	S/W2	3로 SETTING					

L

L-5

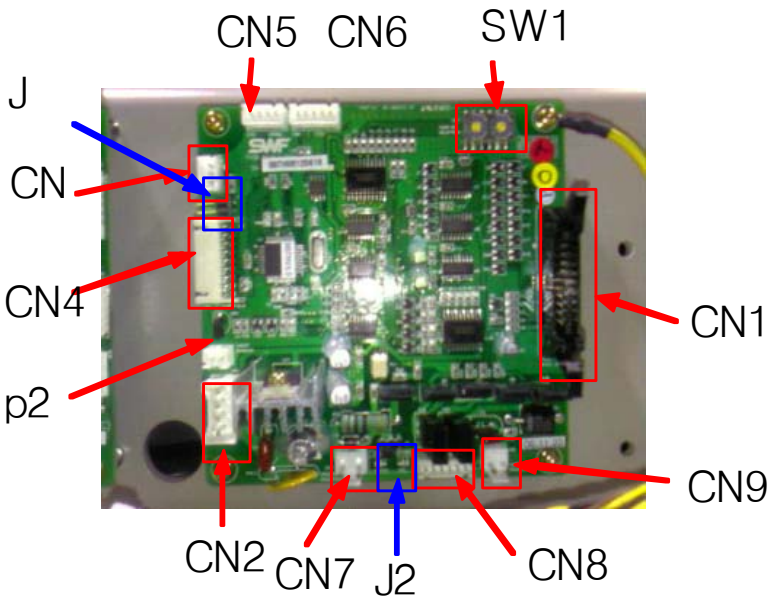

Note

Ref.No	Part No.	Part Name	Application date	Interchangeability	Hardware	Q'ty	Remarks
	CN 1	FROM WHEEL B/D					
	CN 2	DC POWER IN					
	CN 3	CAN					
	CN 4	TO SEQUIN B/D					
	CN 5	SERIAL					
	CN 6	ICD2					
	CN 7	HOLDING SOL.					
	CN 8	JUMP MOTOR					
	CN 9	JUMP SOL.					
	J1	Last Head Shot					
	J2	JUMP MOTOR/SOL. SELECT					
	SW1	Head Number Setting SW					

L

CON Box & OP Box

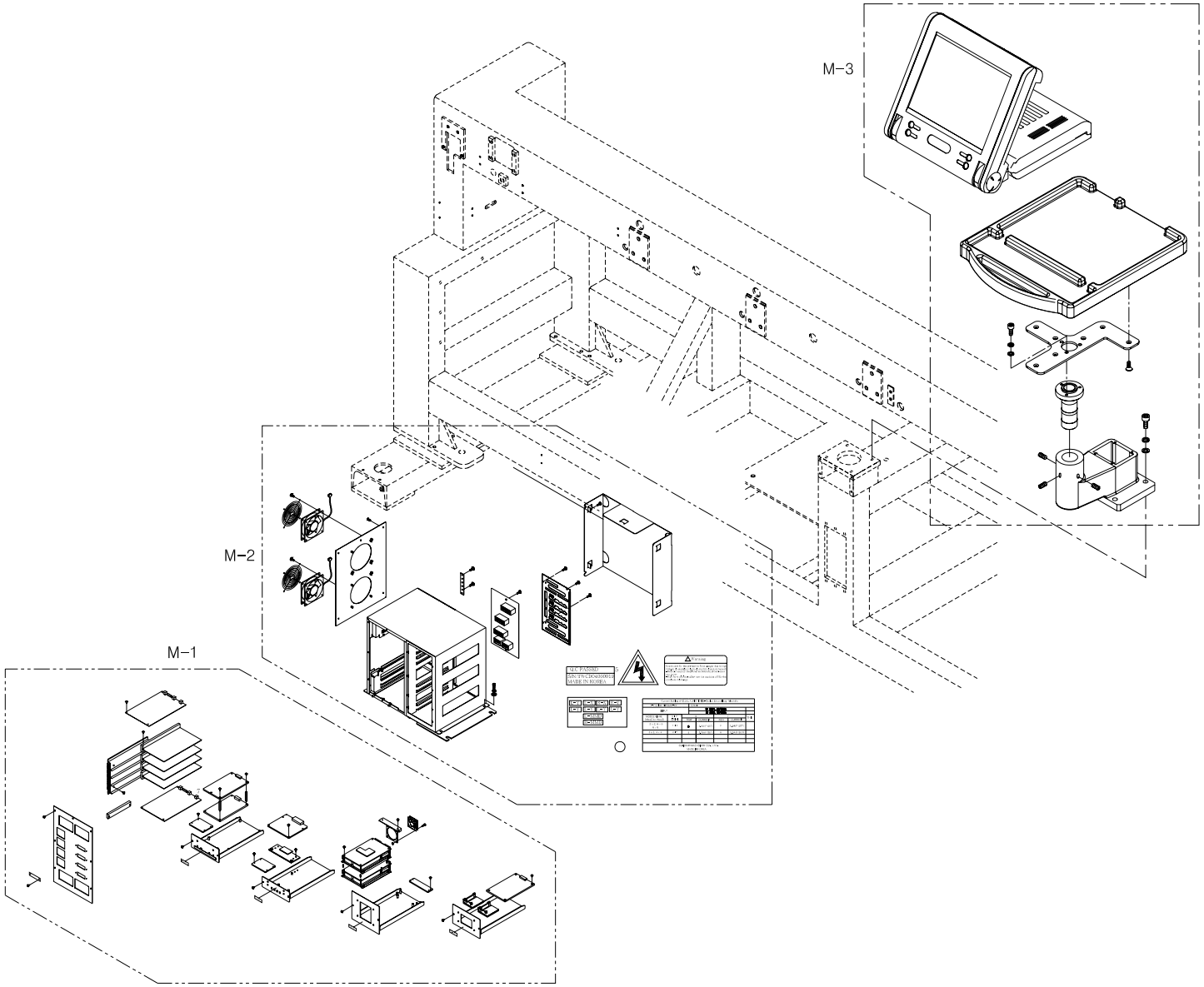

M-1

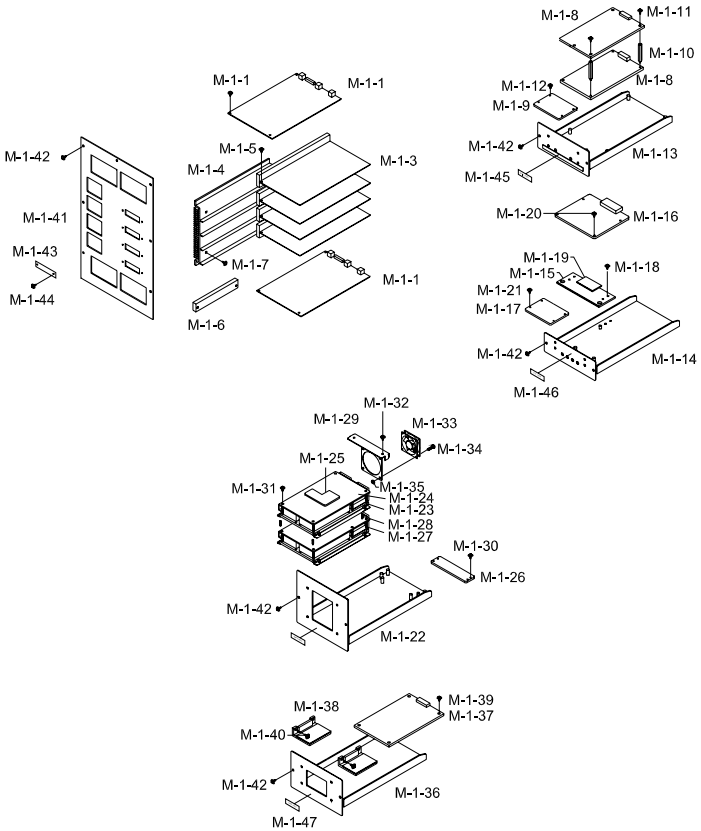

Note

Ref.No	Part No.	Part Name	Application date	Interchangeability	Hardware	Q'ty	Remarks
M-1-1	BD-000311-00	Main Drive (ASSY)(220V)//BD-000312-00(110V)				2	
M-1-2	07-004S-SM5S	Main Drive (ASSY) Screw (set) (M4xL10)				4	
M-1-3	BD-000144-00	XY Driver Board(220V)//BD-000146-00(110V)				4	
M-1-4	GP-013784-00	Driver Radiator				1	
M-1-5	05008AF-4113	XY Driver Board Screw(set) (M4xL16)				12	
M-1-6	05-002S-SW70	PCB Guide (TRCG-3300)				8	
M-1-7	07-004S-SM5S	Driver Radiator Screw(set) (M4xL10)				4	
M-1-8	BD-000306-00	IO MC Board				2	
M-1-9	BD-000343-00	IO LED Board				1	
M-1-10	10-006S-AT10	IO MC Board Connecting Stud (3-5-20)				4	
M-1-11	10-028S-SC53	IO MC Board Screw(set) (M3xL7)				4	
M-1-12	10-028S-SC53	IO LED Board Screw(set) (M3xL7)				4	
M-1-13	GP-014028-01	IO MC Bracket				1	
M-1-14	GP-014027-01	DDC Bracket				1	
M-1-15	GP-013783-00	DDC Radiator				1	
M-1-16	BD-000307-00	DDC Board				1	
M-1-17	BD-000383-00	DDC LED Board				1	
M-1-18	07-005S-SM5S	DDC Radiator Screw(set) (M3xL7)				4	
M-1-19	GP-015654-00	DDC Radiator Sheet				1	
M-1-20	10-028S-SC53	DDC Board Screw(set) (M3xL7)				4	
M-1-21	10-028S-SC53	DDC LED Board Screw(set) (M3xL7)				4	
M-1-22	GP-014029-01	SMPS Bracket				1	
M-1-23	EP-000029-00	SMPS				2	
M-1-24	GP-015653-00	SMPS Radiator				2	
M-1-25	GP-012118-00	SMPS Radiator Sheet				2	
M-1-26	BD-000308-00	UNIT Board				1	
M-1-27	GP-010543-01	SMPS Fixing Stud (3-5-45)				8	
M-1-28	08-002M-SW67	SMPS Fixing Stud (3-5-10)				4	
M-1-29	GP-014042-00	SMPS Fixture				1	
M-1-30	10-028S-SC53	UNIT Board Screw(set) (M3xL7)				4	
M-1-31	07-005S-SM5S	SMPS Radiator Screw(set) (M3xL10)				2	
M-1-32	07-005S-SM5S	SMPS Fixture Screw(set) (M3xL10)				2	
M-1-33	01-005A-BTO1	Control Box FAN				1	
M-1-34	SC-000392-00	Control Box FAN Screw (M4xL30)				4	
M-1-35	09-041S-3701	FAN Nut (M4)				4	
M-1-36	GP-014030-01	LAMP Bracket				1	

M-1

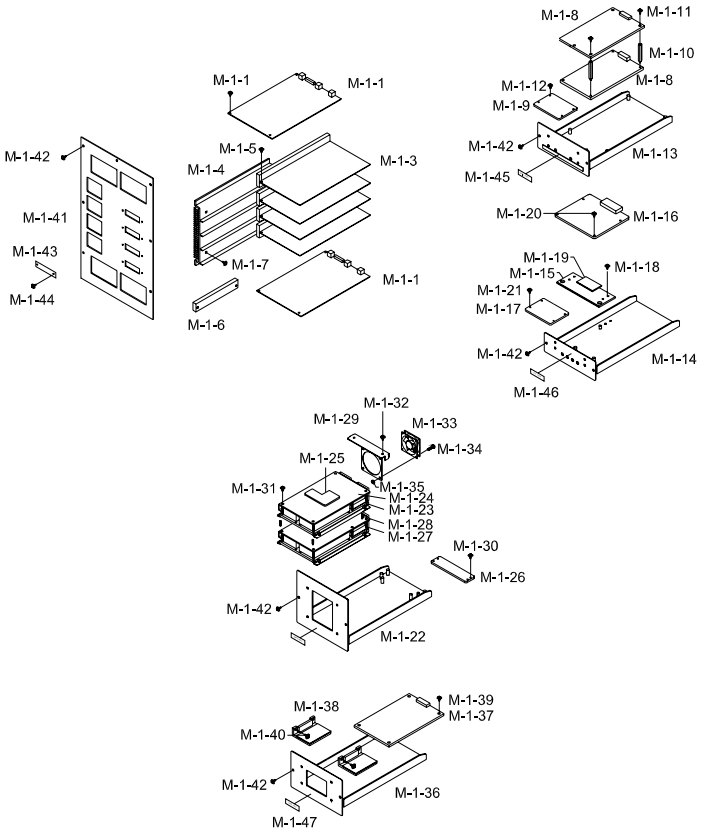

Note

Ref.No	Part No.	Part Name	Application date	Interchangeability	Hardware	Q'ty	Remarks
M-1-37	BD-000378-00	LAMP Board				1	
M-1-38	EP-000149-00	Wiper Motor Driver				2	
M-1-39	10-028S-CS53	LAMP Board Screw(set) (M3xL7)				4	
M-1-40	10-028S-CS53	Wiper Motor Driver Screw(set) (M3xL7)				4	
M-1-41	GP-014034,00	Front Cover (L)				1	
M-1-42	SC-000406-00	Front Cover (L) Screw (M4xL8)				7	
M-1-43	02-001B-SW67	Switch Cover				4	
M-1-44	13054SC-3123	Switch Cover Screw(set) (M3xL8)				8	
M-1-45	GP-014549-00	IO MC Sticker				1	
M-1-46	GP-014548-00	DDC Sticker				1	
M-1-47	GP-014550-00	SMPS Sticker				1	

M

M-2

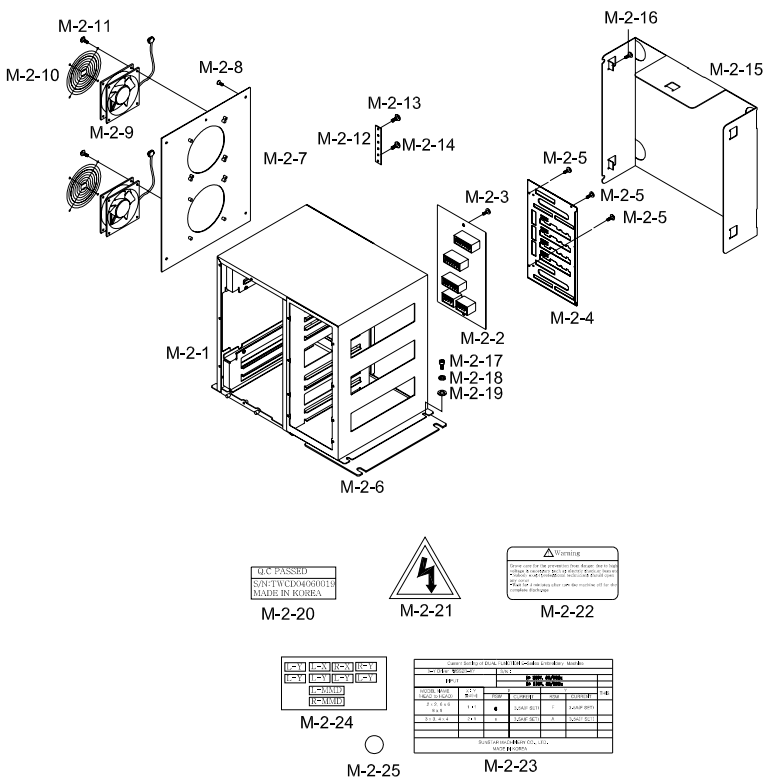

Note

Ref.No	Part No.	Part Name	Application date	Interchangeability	Hardware	Q'ty	Remarks
M-2-1	GP-014047-00	Control Box				1	
M-2-2	BD-000306-00	Back plane Board				1	
M-2-3	07-004S-SM5S	Back plane Board Screw (Set) (M4xL10)				2	
M-2-4	GP-014047-01	Connector PCB Cover				1	
M-2-5	07-004S-SM5S	Connector PCB Cover Screw (set) (M4xL10)				6	
M-2-6	GP-017171-00	Rubber Base				2	
M-2-7	GP-014038-00	Side Cover				1	
M-2-8	10-003M-PT01	Side Cover Screw (M4xL8)				5	
M-2-9	01-002A-AT01	COOLING FAN				2	
M-2-10	01-002B-AU12	FAN Cover				2	
M-2-11	01-002M-AU12	FAN Screw (M4xL35)				8	
M-2-12	10-005A-DU33	Earth Plate				1	
M-2-13	07-004S-SM5S	Earth Plate Screw (M4xL10)				2	
M-2-14	01-037S-2070	Earth Screw (M4xL8)				4	
M-2-15	GP-014036-00	Harness Cover				1	
M-2-16	07-004S-SM5S	Haness Cover Screw(set)				5	
M-2-17	18047SC-7113	Control Box Screw (M5xL15)				4	
M-2-18	16019SW-4115	Control Box Spring Washer				4	
M-2-19	16018SW-1111	Control Box Washer				4	
M-2-20	09-023C-SC53	QC Passed Sticker				1	
M-2-21	04-003S-AU10	Warning Sticker				1	
M-2-22	04-004S-AU10	Warning Sticker				1	
M-2-23	GP-017159-00	XY 전류 셋팅 스티커				1	
M-2-24	10-021B-DU33	DUAL Sticker(9)				1	
M-2-25	09-012S-CE53	Earth Sticker				1	

M

M-3

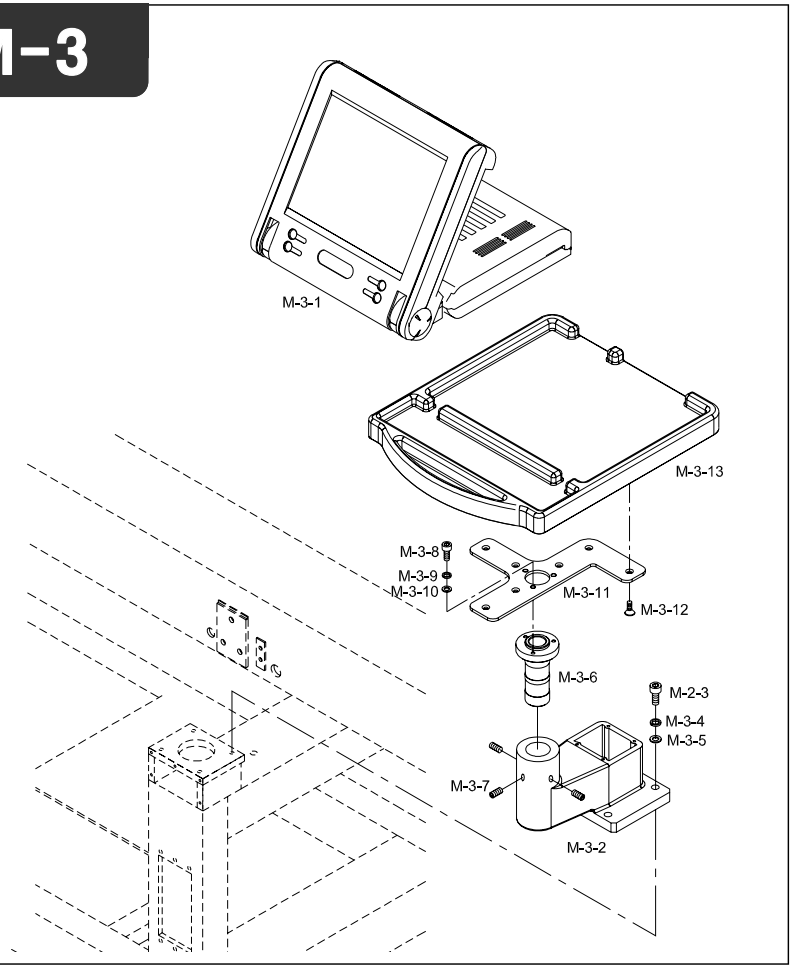

Note

Ref.No	Part No.	Part Name	Application date	Interchangeability	Hardware	Q'ty	Remarks
M-3-1	SWF-00000355	Operation Box (Set)				1	
M-3-2	GP-014009-00	OP Support	Dec,21,05 ~ Mar,28,06	X		1	
	GP-014009-01		Mar,29,06	△		1	
M-3-3	08025MC-7113	HEX. SOCKET BOLT (M8*L25)			O	4	
M-3-4	15095SW-4115	Spring Washer (@8)			O	4	
M-3-5	05029SW-A01	Washer (@8)			O	4	
M-3-6	GP-008647-00	Operation Box Rotation Shaft				1	
M-3-7	08037AF-4517	HEX. SOCKET SET SCREW M6*L10			O	6	
M-3-8	18047SC-7113	Hex/ Socket Bolt (M5*L15)			O	7	
M-3-9	16019SW-4115	Spring Washer (@5)			O	7	
M-3-10	16018SW-1111	Stud Bolt Washer(S) (@5)			O	7	
M-3-11	GP-008648-00	Operation Box Support Plate				1	
M-3-12	18067SC-7119	Hex. Socket Bolt (M5*L8)			O	8	
M-3-13	GP-008651-00	Operation Box Base Block	Apr,15,05 ~ Sep,07,05	X		1	
	GP-008651-01		Sep,08,05 ~	△		1	

M

LAMP & SWITCH

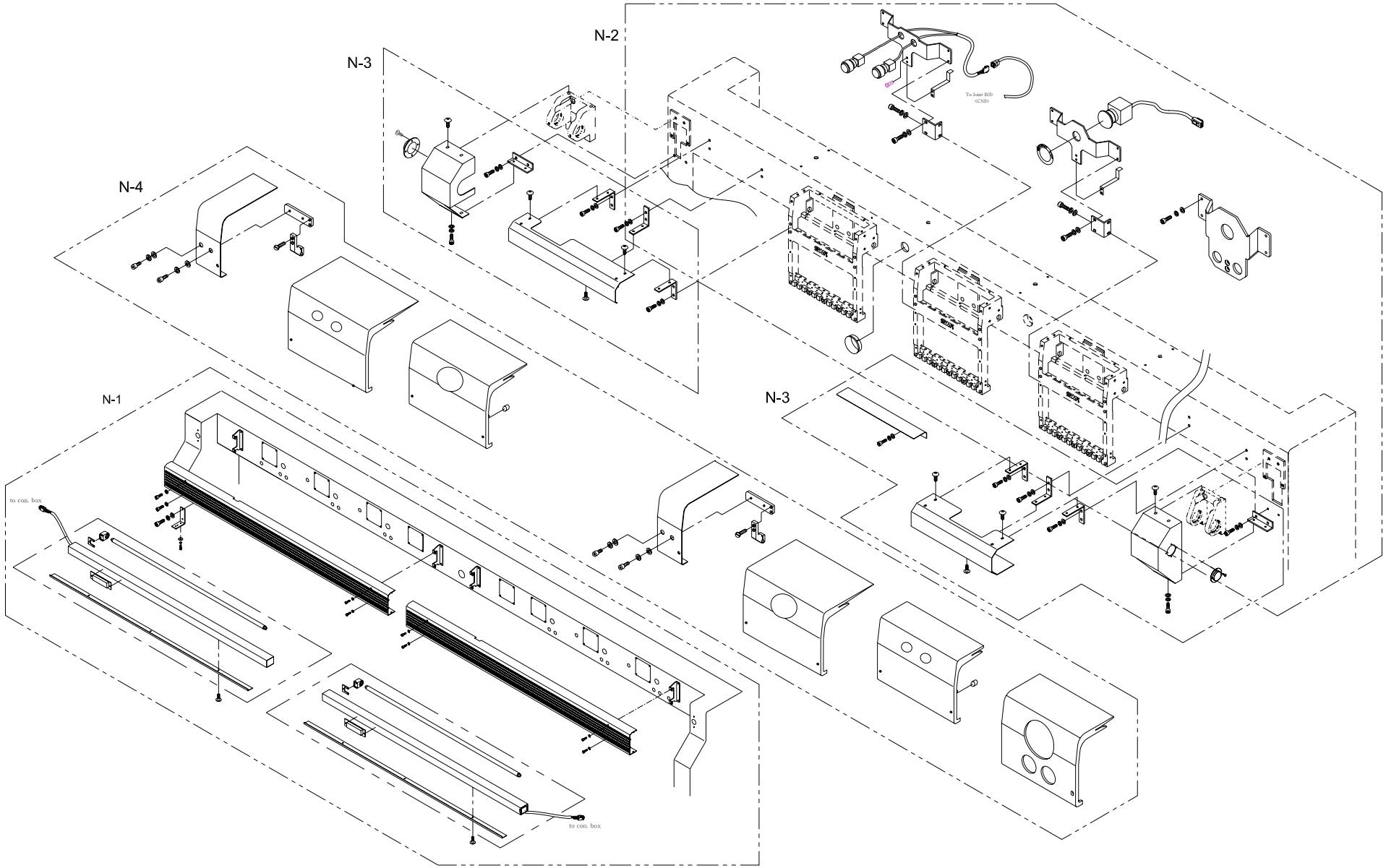

N-1

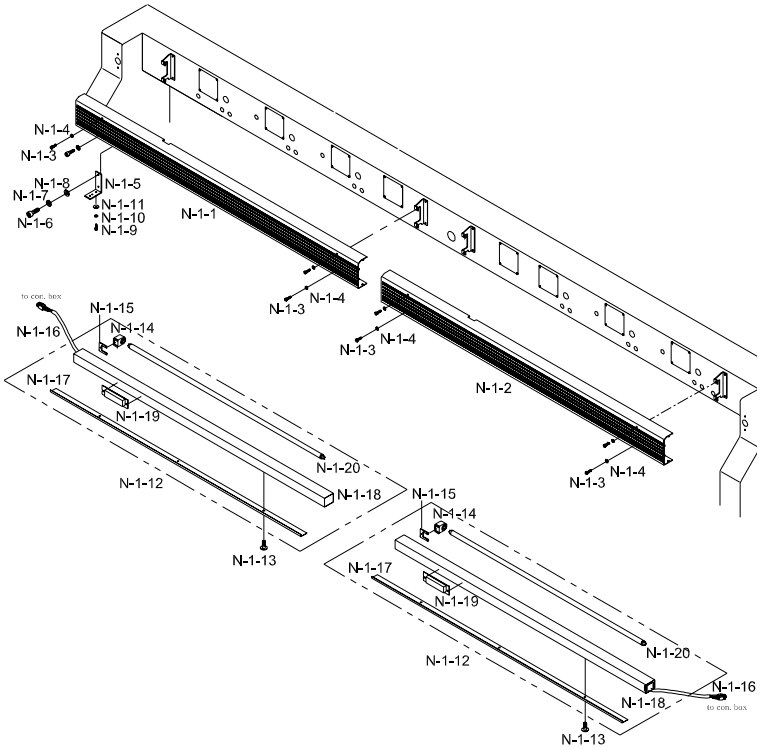

Note

Ref.No	Part No.	Part Name	Application date	Interchangeability	Hardware	Q'ty	Remarks
N-1-1	GP-008788-00	Cable Cover A				1	
N-1-2	GP-008789-00	Cable Cover B	Apr,25,05 ~ Oct,27,05	X		1	
	GP-008789-01		Oct,28,05 ~	△		1	
N-1-3	02031SC-7113	Hex. Socket Screw(M5*L10)			O	4	
N-1-4	18049SW-3111	Washer (@5)			O	4	
N-1-5	11000110UH00	LAMP BRACKET				4	
N-1-6	08091SC-7113	Hex. Socket Bolt (M6*L20)			O	8	
N-1-7	16014SW-4115	Spring Washer (@6)			O	8	
N-1-8	08057SW-1111	Washer (@6)			O	8	
N-1-9	14014SC-7113	Hex.Socket Set Screw(M5*L8)			O	8	
N-1-10	18048SW-3115	Spring Washer (@5)			O	8	
N-1-11	20038PR-T121	WASHER (@8)			O	4	
N-1-12	20007BM-A001	Lamp Ass-Y "A"				2	
N-1-13	20014SC-9124	Hex. Socket Screw(M4*L8)			O	6	
N-1-14	20014ET-A001	Lamp Socket				4	
N-1-15	32004PR-UK01	Lamp Socket Fixed Plate				4	
N-1-16	02105000E040	Cable				2	
N-1-17	32016PR-UH36	RECFLECTING COVER				2	
N-1-18	32025PR-UK01	Lamp Structure B				2	
N-1-19	09000700U000	BALLAST				2	
N-1-20	20009EL-B001	LAMP (32W)				2	

N-2

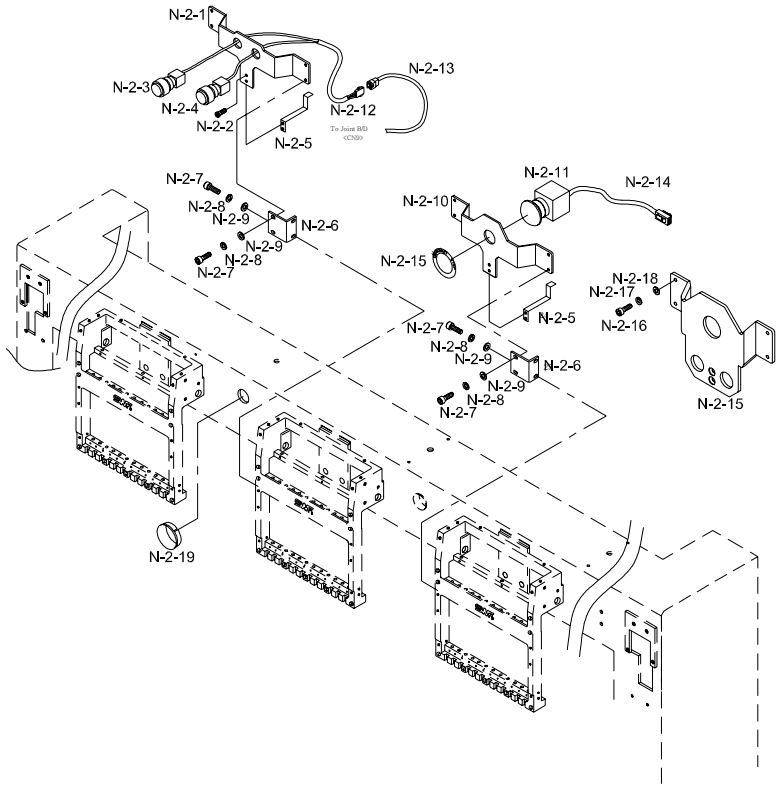

Note

Ref.No	Part No.	Part Name	Application date	Interchangeability	Hardware	Q'ty	Remarks
N-2-1	04000105UH00	S/B SWITCH BASE				2	
N-2-2	15089SC-7119	C.S SCREW (M4*L10)			O	3	
N-2-3	02027EL-UK01	S/B SWITCH SET				2	
N-2-4	02026EL-UK01	START SWITCH SET				2	
N-2-5	02062PR-UI12	CABLE HOLDER				5	
N-2-6	04000104UK00	SWITCH BASE HOLDER UH1204D				4	
	04000204UK00	SWITCH BASE HOLDER UH906D				8	
	04000104UK00	SWITCH BASE HOLDER UH1206D				8	
	04000104UK00	SWITCH BASE HOLDER UH1208D				12	
	04000204UK00	SWITCH BASE HOLDER UH912D				20	
N-2-7	14002SC-7113	HEX.SOCKET BOLT (M6*L15)			O	40	
N-2-8	16014SW-4115	SPRING WASHER (@6)			O	40	
N-2-9	08057SW-1111	WASHER (@6)			O	40	
N-2-10	04000205UH00	EMERGENCY SWITCH BASE				2	
N-2-11	EP-000157-00	EMERGENCY SWITCH SET				2	
N-2-12	25032EL-UK01	START STOP SWITCH (4HT-32)				4	
N-2-13	25031EL-UK01	TO JOINT B/D CABLE (4HT-31)				2	
N-2-14	CA-001730-00	EMEGUNCY S/W CABLE				2	
N-2-15	02103ET-UK01	EMERGENCY SWITCH STICKER				2	
N-2-16	GP-005027-00	Switch Base UH1504D				2	
N-2-17	15105SC-4113	HEX.SOCKET BOLT (M4*L15)			O	4	
N-2-18	16014SW-4115	Spring Washer (@4)			O	4	
N-2-19	08057SW-1111	Washer (@4)			O	4	
N-2-20	02017PM-A001	CABLE RING				4	

N-3

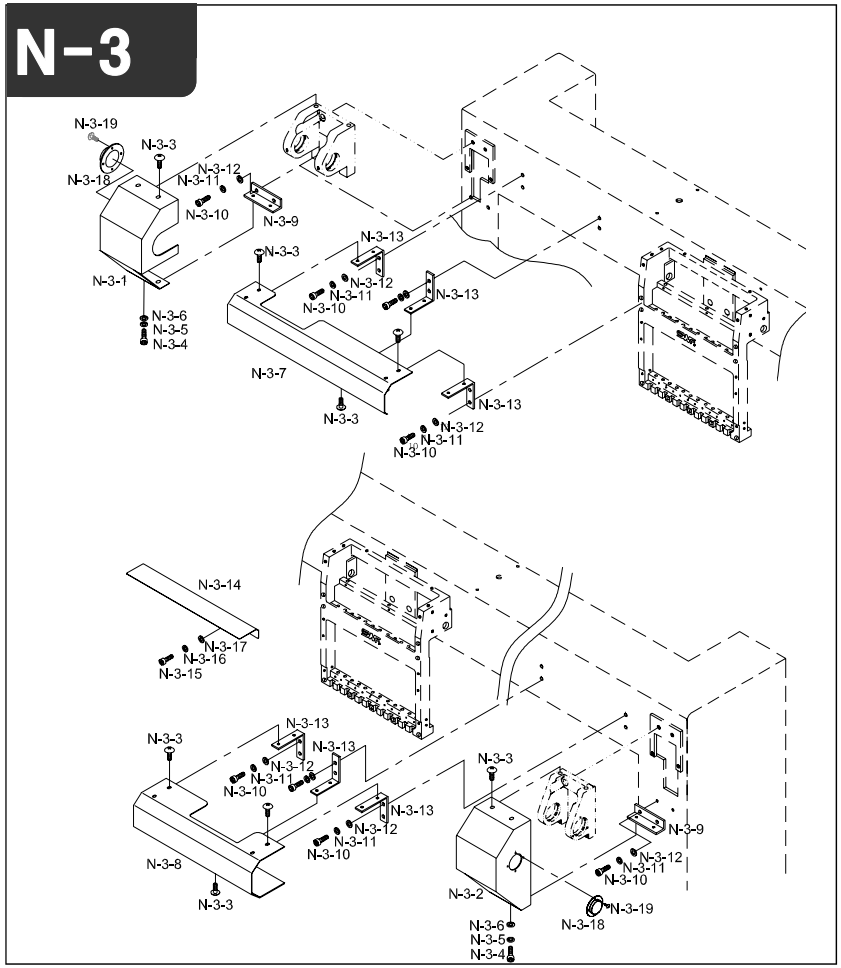

Note

Ref.No	Part No.	Part Name	Application date	Interchangeability	Hardware	Q'ty	Remarks
N-3-1	01000100UH80	TOP SHAFT PULLEY COVER				1	
N-3-2	01001800UH60	UPPER SHAFT PULLEY COVER (R)				1	
N-3-3	15042SC-3123	TRUSS SCREW (M4*L6)			O	16	
N-3-4	02023SC-7113	HEX.SOCKET BOLT (M4*L8)			O	4	
N-3-5	18014SW-3115	SPRING WASHER (@4-NO2)			O	4	
N-3-6	18015SW-3111	WASHER (4@)			O	4	
N-3-7	GP-005007-00	TOP SHAFT COVER B-1 UH1504D				1	
	GP-016801-00	TOP SHAFT COVER B-1				1	
N-3-8	GP-005008-00	TOP SHAFT COVER B-2 UH1504D	Oct,01,04 ~ Nov,17,04	X		1	
	GP-005008-01		Nov,18,04 ~	X		1	
	GP-016802-00	TOP SHAFT COVER B-2				1	
N-3-9	02031PR-UK02	PULLEY COVER BRACKET				2	
N-3-10	02031SC-7113	HEX. SOCKET SCREW(M5*L10)			O	16	
N-3-11	18048SW-3115	SPRING WASHER (@5)			O	16	
N-3-12	16018SW-1111	WASHER (@5)			O	16	
N-3-13	02025PR-UK02	TOP SHAFT COVER BRACKET				6	
N-3-14	09000415UH00	SURFACE COVER L287				2	
N-3-15	02015SC-7113	HEX.SOCKET BOLT(M4*L10)			O	4	
N-3-16	02028SW-9115	SPRING WASHER (@4)			O	4	
N-3-17	05009SW-1111	WASHER (@4-L)			O	4	
N-3-18	01001100UK00	TOP SHAFT PULLEY COVER B				2	
N-3-19	09005SC-3123	TRUSS SCREW (M3*L6)			O	8	

N-4

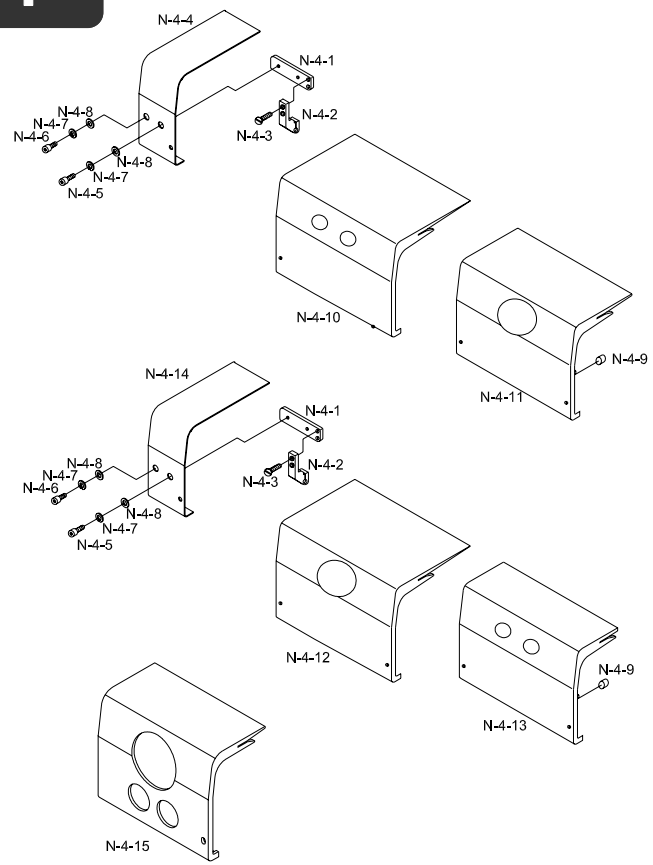

Note

Ref.No	Part No.	Part Name	Application date	Interchangeability	Hardware	Q'ty	Remarks
N-4-1	09000200H000	TOP SHAFT COVER BRACKET (L)				2	
N-4-2	08004700A000	Color Change Bracket "A"				2	
N-4-3	13048SC-A001	Bracket "A" Screw				4	
N-4-4	01001400UK00	Top Shaft Cover (L)				1	
N-4-5	02015SC-7113	Hex.Socket Bolt(M4*L10)			O	2	
N-4-6	02023SC-7113	Hex.Socket Bolt(M4*L8)			O	2	
N-4-7	18014SW-3115	Spring Washer (@4-NO2)			O	4	
N-4-8	18015SW-3111	Washer (4@)			O	4	
N-4-9	02023ET-A001	Top Shaft Cover Magnet				12	
N-4-10	09000303UH00	Top Shaft Cover "A-1" (9C)				1	
	09000304UH00	Top Shaft Cover "A-1" (12C)					
	09000305UH00	Top Shaft Cover "A-1" (15C)					
N-4-11	09000203UH60	Top Shaft Cover "A-2" (9C)				1	
	09000204UH60	Top Shaft Cover "A-2" (12C)					
	09000205UH60	Top Shaft Cover "A-2" (15C)					
N-4-12	09000203UH00	Top Shaft Cover "A-3" (9C)				1	
	09000204UH00	Top Shaft Cover "A-3" (12C)					
	09000205UH00	Top Shaft Cover "A-3" (15C)					
N-4-13	09000103UH00	Top Shaft Cover "A-4" (9C)				1	
	09000104UH00	Top Shaft Cover "A-4" (12C)					
	09000105UH00	Top Shaft Cover "A-4" (15C)					
N-4-14	01002000UH60	UPPER SHAFT COVER (L-2)				1	
N-4-15	GP-005026-00	Upper Shaft Cover (A) UH1504D				2	

Bobbin Winder

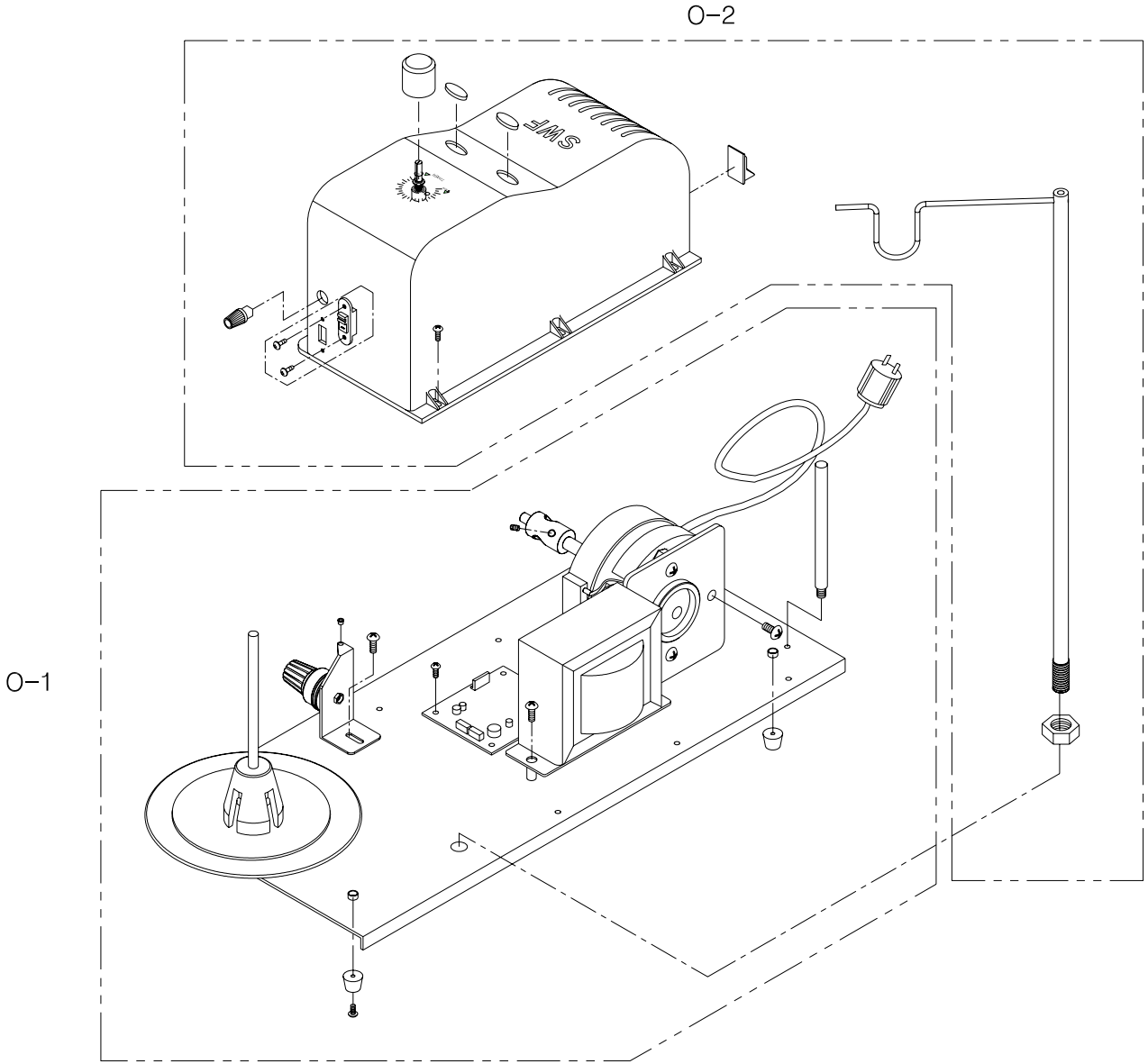

O-1

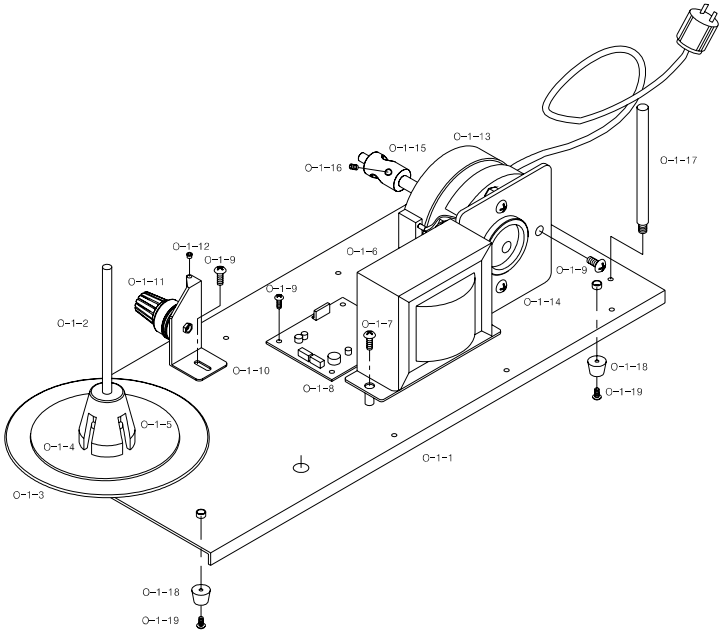

Note

08000010B000 : Bobbin Winder Assy

Ref.No	Part No.	Part Name	Application date	Interchangeability	Hardware	Q'ty	Remarks
O-1-1	GP-014870-00	Base				1	
O-1-2	GP-014366-00	Spool Post				1	
O-1-3	GP-014363-00	Spool Support Base				1	
O-1-4	GP-014365-00	Spool Support Base Sponge				1	
O-1-5	12012-PM-A001	Spool Holder				1	
O-1-6	EP-000078-00	Transformer A'ssy				1	
O-1-7	18153SC-3123	Truss Screw (M4*L12)			O	8	
O-1-8	EP-000095-00	PCB (DW-BW01)				1	
O-1-9	15042SC-3123	Truss Screw (M4*L6)			O	9	
O-1-10	GP-014370-00	Tension Control Holder				1	
O-1-11	AS-003951-00	Thread Control Device Ass'y				1	
O-1-12	05452CM-A001	Thread Guide Bushing				1	
O-1-13	MO-000029-00	Motor Ass'y				1	
O-1-14	GP-014871-00	Motor Bracket				1	
O-1-15	GP-014354-00	Bobbin Shaft	Jan,06,06 ~ Feb,26,06	X		1	
O-1-15	GP-014354-01		Feb,27,06 ~ Mar,02,06	△		1	
O-1-15	GP-014354-02		Mar,03,06 ~ Mar,08,06	△		1	
O-1-15	GP-014354-03		Mar,09,06 ~	△		1	
O-1-16	SC-000173-00	Set Screw (M5*L4)			O	1	
O-1-17	02026SC-A001	Stand				1	
O-1-18	GP-014346-00	Rubber For Support Base				4	
O-1-19	13054SC-3123	Truss Screw (M3*L8)			O	4	

O-2

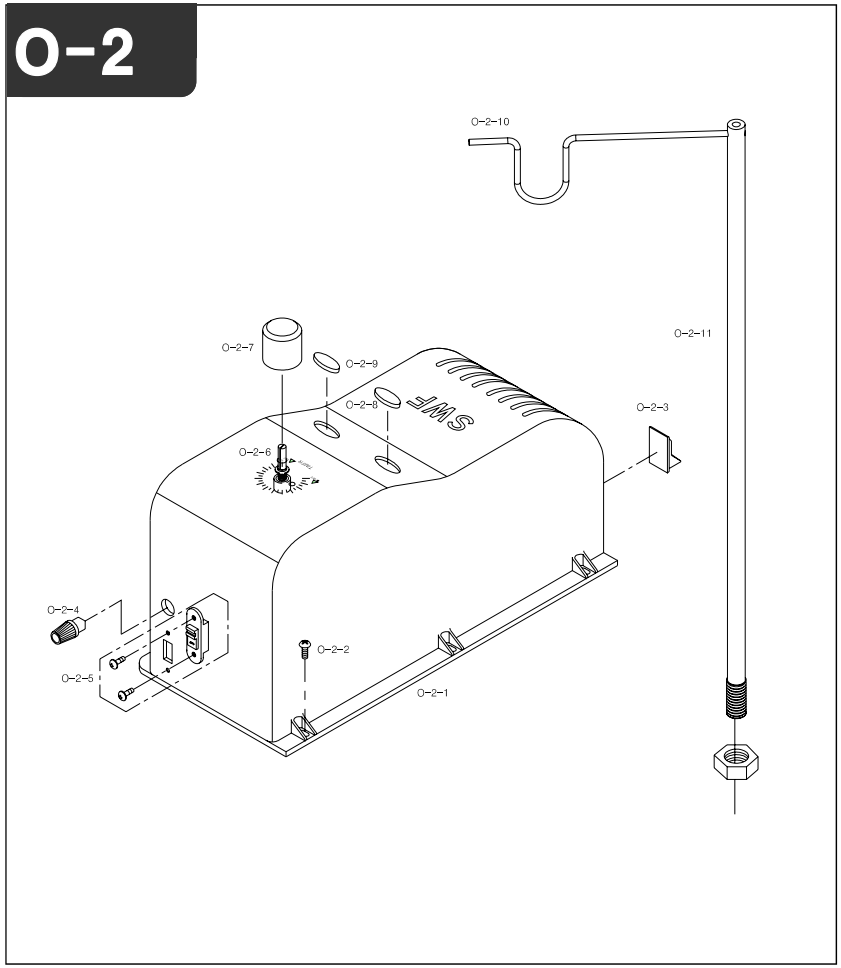

Note

Ref.No	Part No.	Part Name	Application date	Interchangeability	Hardware	Q'ty	Remarks
O-2-1	GP-014869-00	Cover	Jan,26,06 ~ Dec,24,06	X		1	
O-2-1	GP-014869-01		Dec,25,06 ~	△		1	
O-2-2	18153SC-3123	Truss Screw (M4*L12)			O	8	
O-2-3	EP-000079-00	On / Off Switch				1	
O-2-4	GP-014678-00	Fuse Holder				1	
O-2-5	EP-000082-00	Switch (Select)				1	
O-2-6	GP-014677-00	VR Knob				1	
O-2-7	EP-000083-00	VR				1	
O-2-8	EP-000080-00	Push Switch (Start)				1	
O-2-9	EP-000081-00	Push Switch (Stop)				1	
O-2-10	GP-014369-00	Antenna Bar Hanger				2	
O-2-11	GP-014368-00	Antenna Bar				1	

COVER

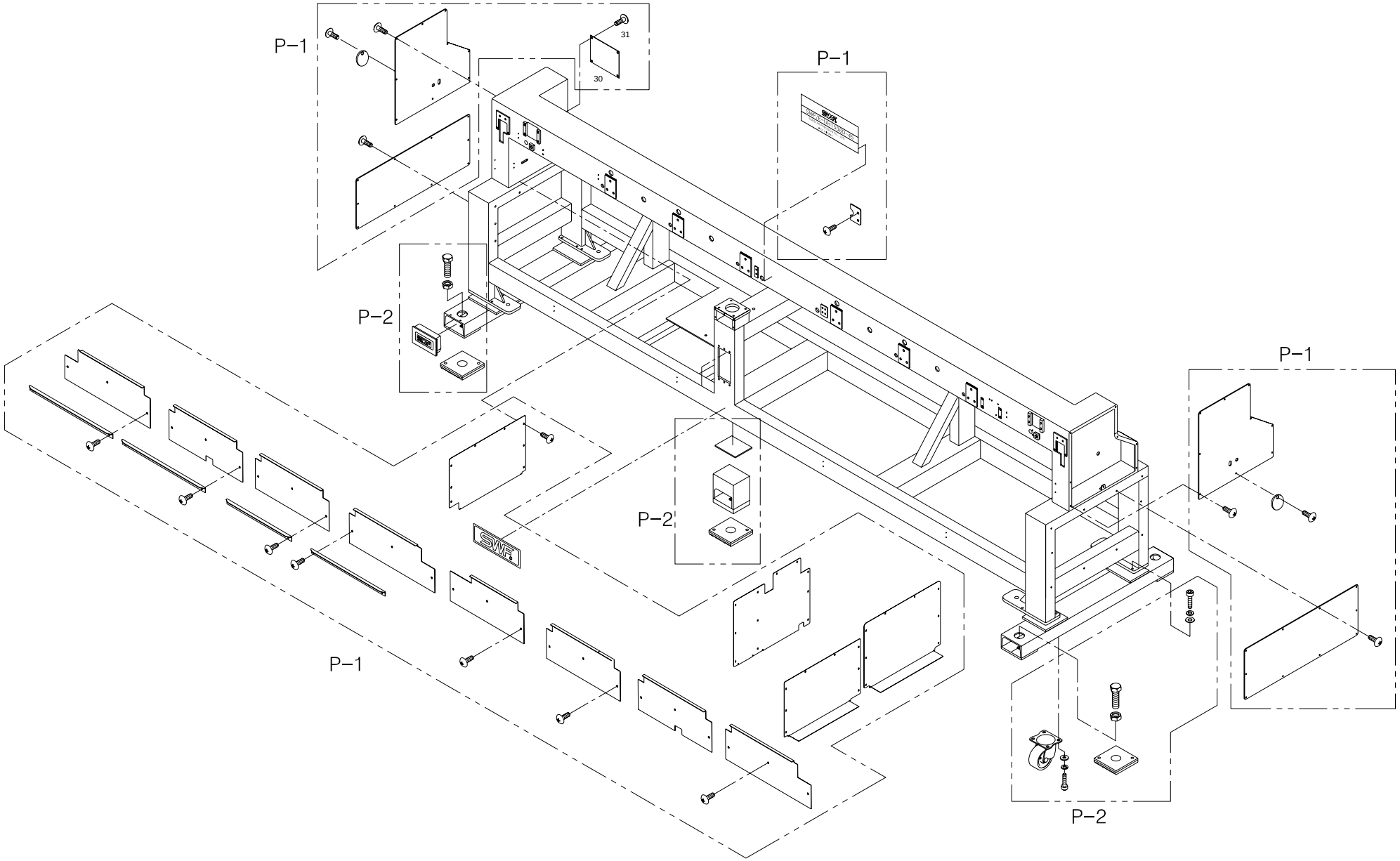

P-1

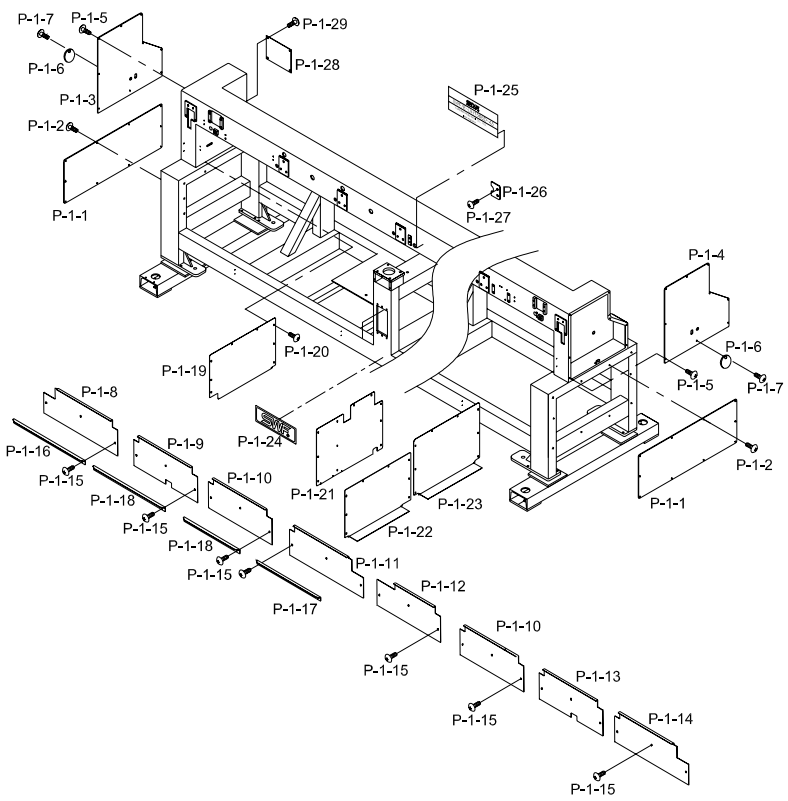

Note

Ref.No	Part No.	Part Name	Application date	Interchangeability	Hardware	Q'ty	Remarks
P-1-1	GP-008790-00	BODY SIDE COVER				2	
P-1-2	02044SC-3123	TRUSS SCREW (M5*L8)			O	20	
P-1-3	01000300UH61	BEAM BRACKET COVER (L)				1	
P-1-4	01000400UH61	BEAM BRACKET COVER (R)				1	
P-1-5	02044SC-3123	TRUSS SCREW (M5*L8)			O	18	
P-1-6	02054PR-A001	MAIN MOTOR PULLEY COVER				1	
P-1-7	02044SC-3123	TRUSS SCREW (M5*L8)			O	1	
P-1-8	01000500UH61	BODY FRONT COVER A				1	
P-1-9	01000600UH61	BODY FRONT COVER B				1	
P-1-10	01000700UH61	BODY FRONT COVER C				2	
P-1-11	GP-004110-00	BODY FRONT COVER D				1	
P-1-12	GP-004111-00	BODY FRONT COVER E				1	
P-1-13	01001000UH61	BODY FRONT COVER F				1	
P-1-14	01001100UH61	BODY FRONT COVER G				1	
P-1-15	02044SC-3123	TRUSS SCREW (M5*L8)			O	24	
P-1-16	01002900UH60	TABLE SUPPORT (A)				2	
P-1-17	GP-004115-00	TABLE SUPPORT (C)				2	
P-1-18	05001400UH80	TABLE SUPPORT ANGLE B L399				4	
P-1-19	GP-016753-00	BODY INSIDE COVER A				1	
P-1-20	02044SC-3123	TRUSS SCREW (M5*L8)			O	40	
P-1-21	GP-005688-00	BODY INSIDE COVER C	Nov,18,04 ~ Apr,24,05	x		1	
	GP-005688-01		Apr,25,05 ~	X		1	
P-1-22	GP-007852-00	BODY INSIDE COVER B	Mar,05,05 ~ Apr,24,05	X		1	
	GP-007852-01		Apr,25,05 ~	X		1	
P-1-23	GP-008893-00	BODY INSIDE COVER B				1	
P-1-24	02101ET-UK01	BRAND MARK				1	
P-1-25	08000205UH61	Model Mark				1	
P-1-26	GP-005982-00	CABLE COVER FOR OP SUPPORT				2	
P-1-27	02044SC-3123	TRUSS SCREW (M5*L8)			O	4	
P-1-28	02097ET-B001	MODEL NAME PLATE				1	
P-1-29	02010SC-3123	TRUSS SCREW (M4*L8)			O	4	

P-2

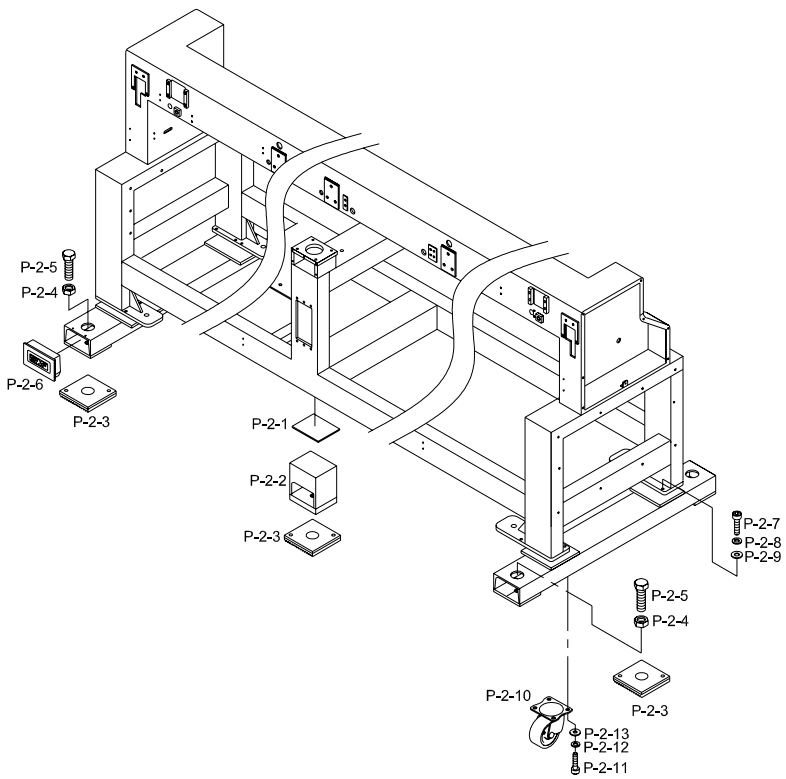

Note

Ref.No	Part No.	Part Name	Application date	Interchangeability	Hardware	Q'ty	Remarks
P-2-1	01002700UH60	Rubber For Body Support				2	
P-2-2	01002800UH60	Body Support				2	
P-2-3	GP-010074-00	LEVELING BASE ASS'Y				6	
P-2-4	01004SC-UK01	HEX. BOLT (M20*L60)			O	6	
P-2-5	02036SN-1211	HEX. NUT (M20-NO2)				6	
P-2-6	02043RB-W121	BODY SUPPORT RUBBER CAP				6	
P-2-7	14003SC-4113	HEX. SOCKET BOLT (M8*L20)			O	16	
P-2-8	15095SW-3115	SPRING WASHER (@8)			O	16	
P-2-9	08041SW-1111	WASHER (@8-S)			O	16	
P-2-10	01000100UH80	HAMMER CASTER SET (URETHANE)				4	
P-2-11	14006SC-7113	HEX.SOCKET SET SCREW(M8*L15)			O	16	
P-2-12	15095SW-3115	SPRING WASHER (@8)			O	16	
P-2-13	04029SW-A001	STUD BOLT WASHER(S) (@8)			O	16	

FRAME (UH1504D-45)

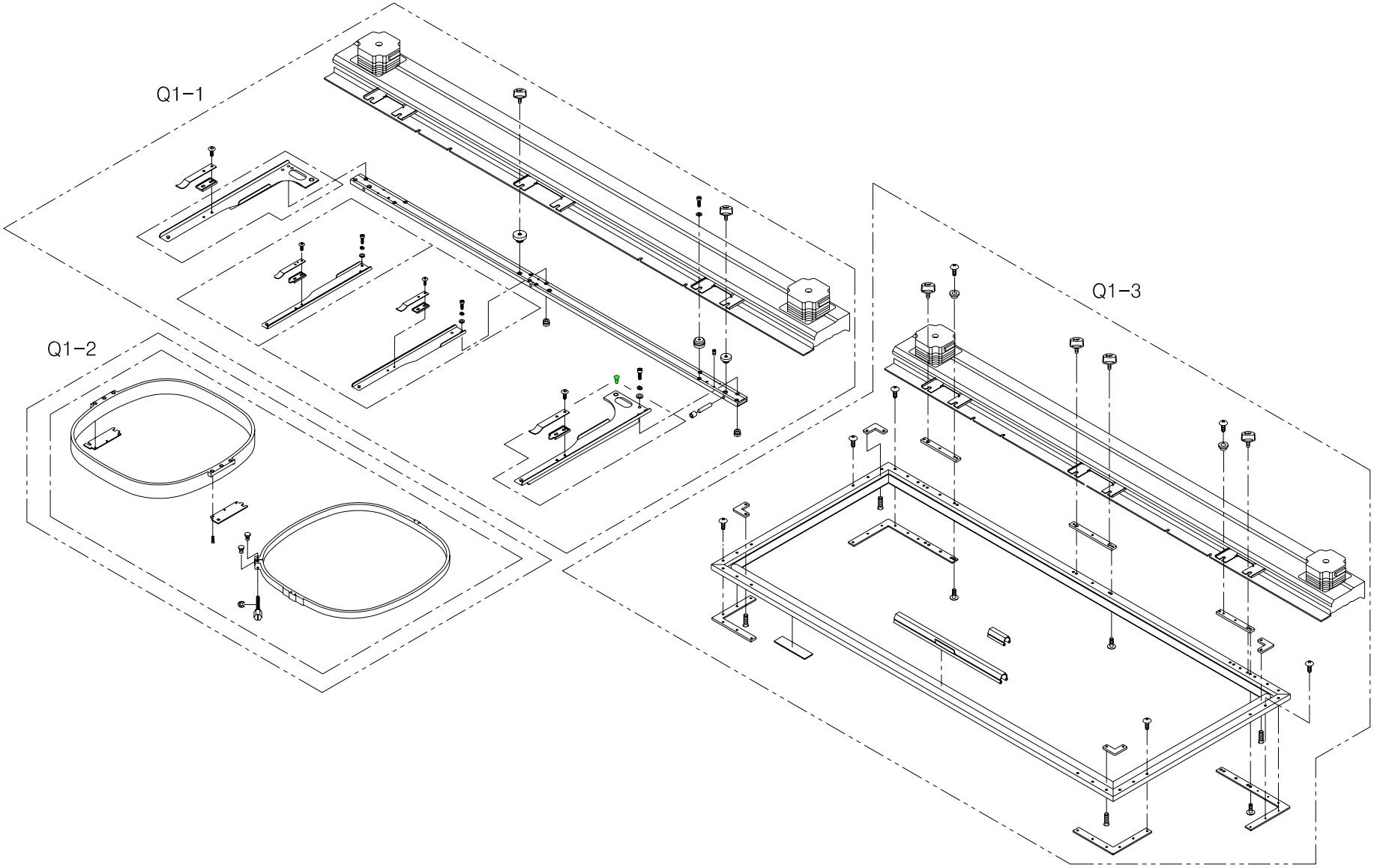

Q1-1

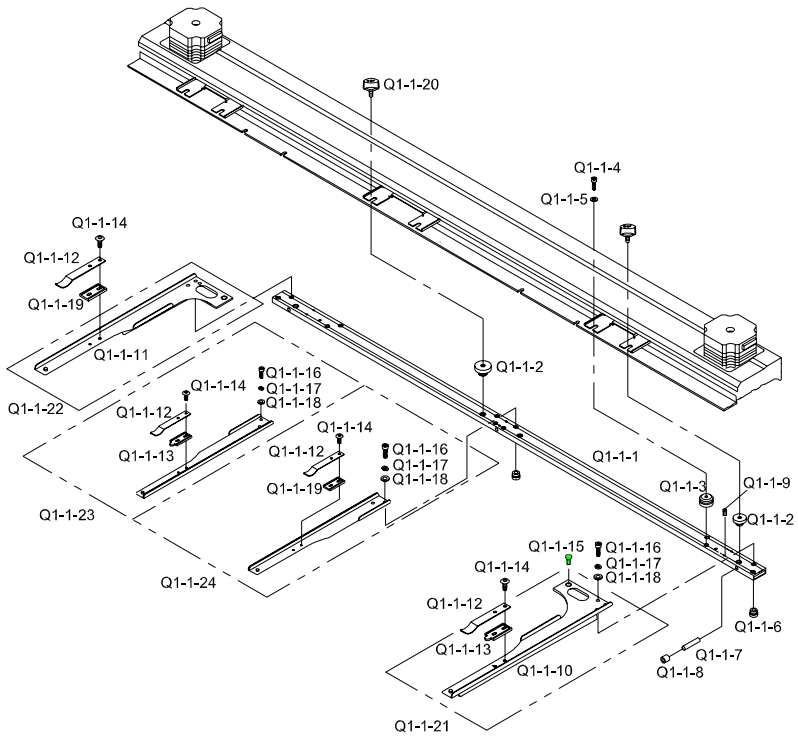

Note

Ref.No	Part No.	Part Name	Application date	Interchangeability	Hardware	Q'ty	Remarks
Q1-1-1	GP-004945-00	Tubular Frame	Sep,25,04 ~ Sep,03,06	X		2	
	GP-004945-01		Sep,04,06 ~	X		2	
Q1-1-2	22002CW-UK01	Screw Bush "A"				8	
Q1-1-3	22003CW-UK01	Location Block				4	
Q1-1-4	11029SC-4113	Hex. Socket Bolt (M4*L20)			O	4	
Q1-1-5	05009SW-1111	Washer (@4-L)			O	4	
Q1-1-6	GP-010408-00	SCREW BUSH C				48	
Q1-1-7	22007BR-UK01	Bearing Pin				6	
Q1-1-8	22009BR-UK01	Needle Bearing (Taf51010)				6	
Q1-1-9	03022SC-4517	Hex. Socket Set Screw(M4*L5)			O	12	
Q1-1-10	09100100U000	Attachment (R)				2	
Q1-1-11	09200100U000	Attachment (L)				2	
Q1-1-12	22005PR-T121	Clip				8	
Q1-1-13	22004PM-T121	Clip Bracket (R)				56	
Q1-1-14	09100200U000	Fixed Clip Bracket Screw				16	
Q1-1-15	02002SC-7119	Pluss Screw (M4*L8)			O	4	
Q1-1-16	02015SC-7113	Hex.Socket Bolt(M4*L10)			O	4	
Q1-1-17	18014SW-3115	Spring Washer (@4-No2)				16	
Q1-1-18	18015SW-3111	Washer (4@)				16	
Q1-1-19	22003PM-T121	Clip Bracket (L)				4	
Q1-1-20	09000100U000	Tubular Frame Fixing Screw				8	
Q1-1-21	09100000U000	Attachment (R)				2	
Q1-1-22	09200000U000	Attachment (L)				2	
Q1-1-23	09100410U000	Attachment (Set-L)				2	
Q1-1-24	09100510U000	Attachment (Set-R)				2	

Q1-2

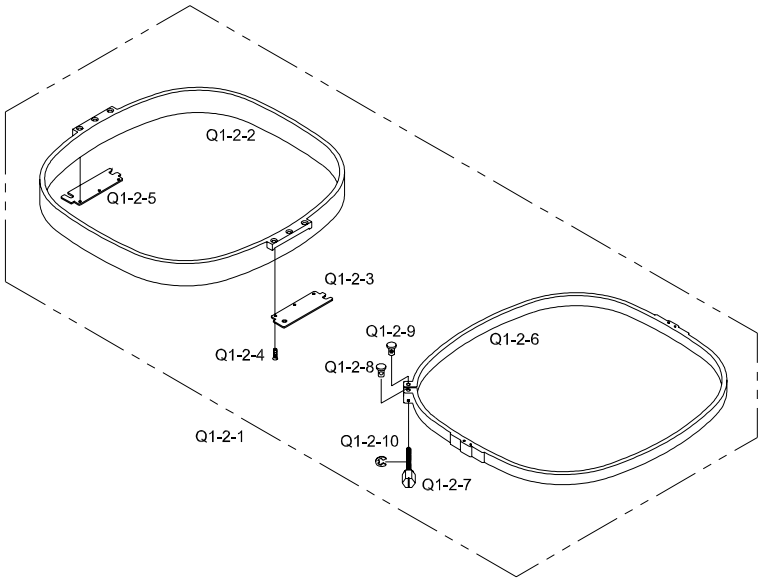

Note

Ref.No	Part No.	Part Name	Application date	Interchangeability	Hardware	Q'ty	Remarks
Q1-2-1	22038BM-UK01	Tubular Set				8	
Q1-2-2	22038PM-UK01	Tubular (Inner) 45*44				8	
Q1-2-3	17014PR-UK01	Tubular Holder "A"				8	
Q1-2-4	10011SC-8119	Plus Screw (M3*L6)			O	48	
Q1-2-5	17015PR-UK01	Tubular Holder "B"				8	
Q1-2-6	22043PM-UK01	Tubular (Outer) 45*44				8	
Q1-2-7	22044CW-UK01	Adjusting Bolt				8	
Q1-2-8	22045CW-UK01	Adjusting Bolt Guide				8	
Q1-2-9	22046CW-UK01	Adjusting Nut				8	
Q1-2-10	15159SR-4013	E-Ring (3@)				8	

Q1-3

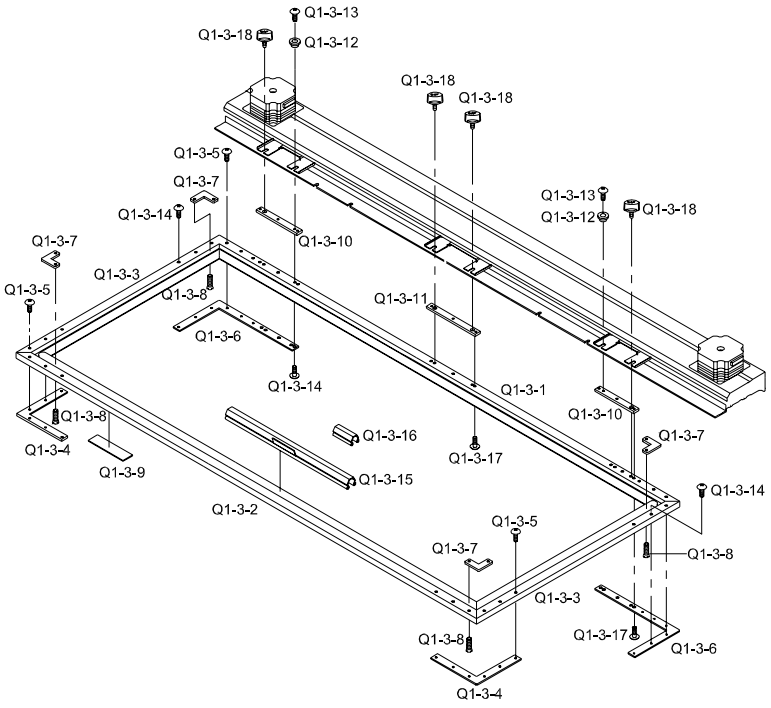

Note

Ref.No	Part No.	Part Name	Application date	Interchangeability	Hardware	Q'ty	Remarks
Q1-3-1	GP-004932-00	Square Frame (A)				2	
Q1-3-2	GP-004933-00	Square Frame (B)				2	
Q1-3-3	24007AD-UK01	Border Frame Sash L=575				4	
Q1-3-4	24004PR-UK01	Connecting Plate "F"				4	
Q1-3-5	02044SC-3123	Truss Screw (M5*L8)			O	48	
Q1-3-6	24004PR-UK02	Connecting Plate "E"				4	
Q1-3-7	24011PR-T121	Connecting Plate "C"				8	
Q1-3-8	10010SC-8119	Plus Screw (M3*L5)			O	16	
Q1-3-9	24016SF-T121	Felt				20	
Q1-3-10	24008PR-UK02	Square Frame Fixiing Plate A				4	
Q1-3-11	24011PR-UK02	Square Frame Fixiing Plate B				2	
Q1-3-12	18025PM-UK01	Location Block				4	
Q1-3-13	18153SC-3123	Plus Screw (M4*L10)			O	4	
Q1-3-14	02010SC-3123	Truss Screw (M4*L8)			O	12	
Q1-3-15	18084PR-A001	Embroidery Frame Clip L-300				4	
	18085PR-A001	Embroidery Frame Clip L-250				4	
	18085PR-T121	Embroidery Frame Clip L-220				8	
Q1-3-16	18086PR-B001	Frame Clip Support				32	
Q1-3-17	15042SC-3123	Truss Screw (M4*L6)			O	12	
Q1-3-18	09000100U000	Tubular Frame Fixing Screw				8	

FRAME (UH1506D-45)

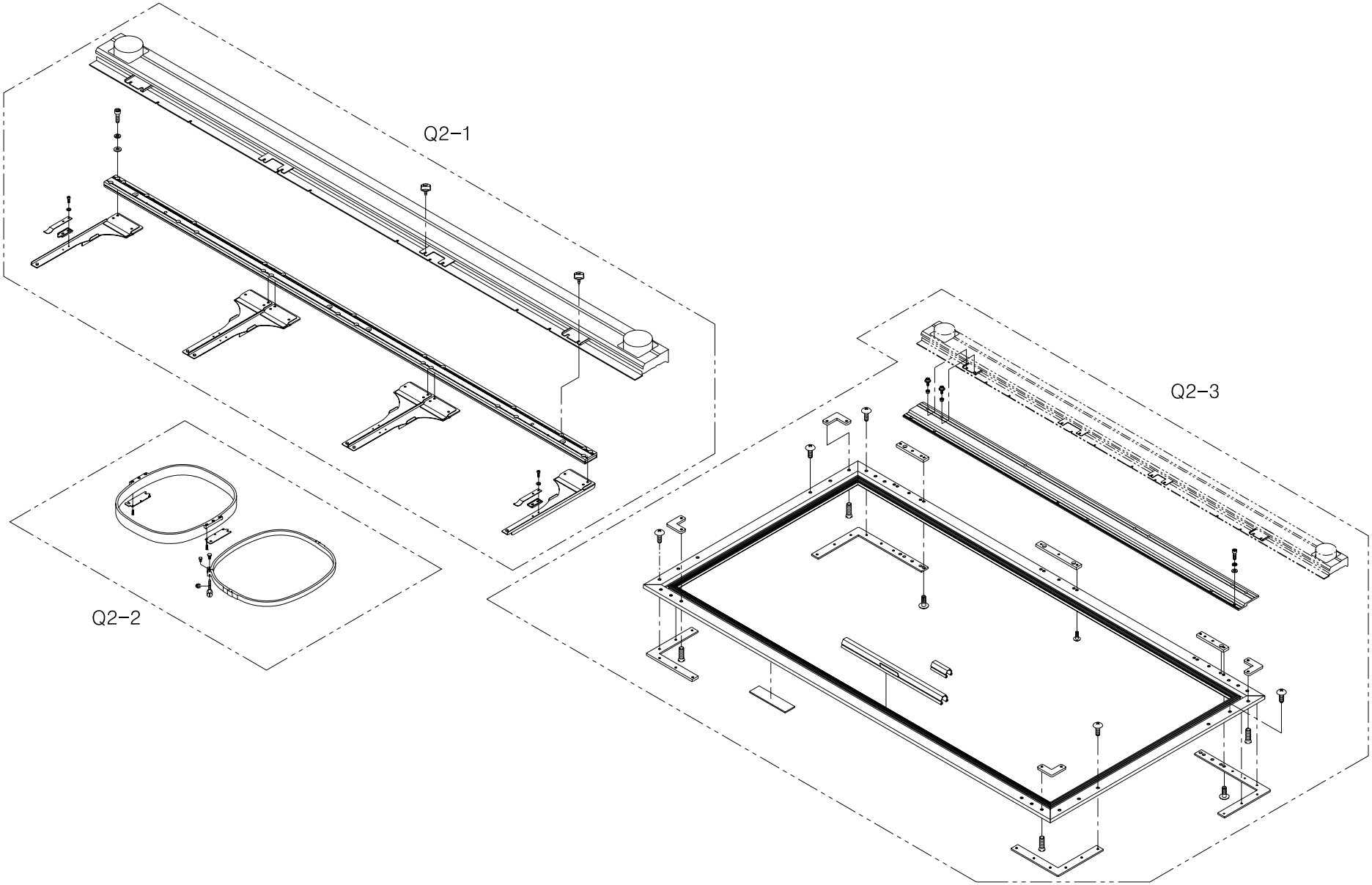

Q2-1

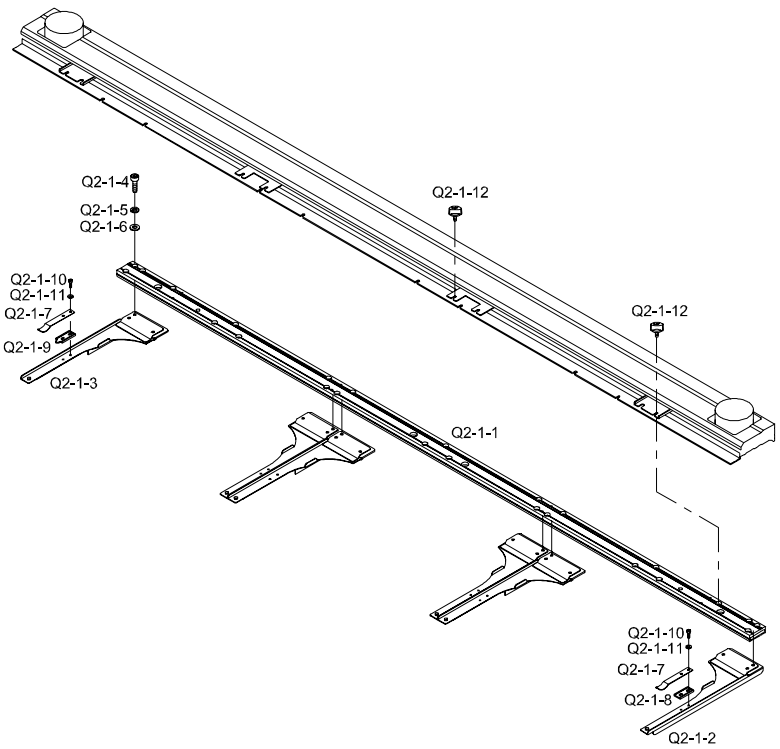

Note

Ref.No	Part No.	Part Name	Application date	Interchangeability	Hardware	Q'ty	Remarks
Q2-1-1	GP-007526-00	Tubular Frame				2	
Q2-1-2	09100200UHF0	Attachment(R) - Set				6	
Q2-1-3	09100300UHF0	Attachment(L) - Set				6	
Q2-1-4	05008SC-4113	Hex.Socket Bolt (M4*L16)			O	36	
Q2-1-5	18014SW-3115	Spring Washer (@4-No2)			O	36	
Q2-1-6	18015SW-3111	Washer (4@)			O	36	
Q2-1-7	22005PR-T121	Clip				12	
Q2-1-8	22004PM-T121	Clip Bracket (R)				6	
Q2-1-9	22003PM-T121	Clip Bracket (L)				6	
Q2-1-10	22006SC-7113	Hex. Socket Bolt (M3*L8)			O	24	
Q2-1-11	06011SW-2111	Washer (@3)			O	24	
Q2-1-12	09000100U000	Tubular Frame Fixing Screw				16	

Q2-2

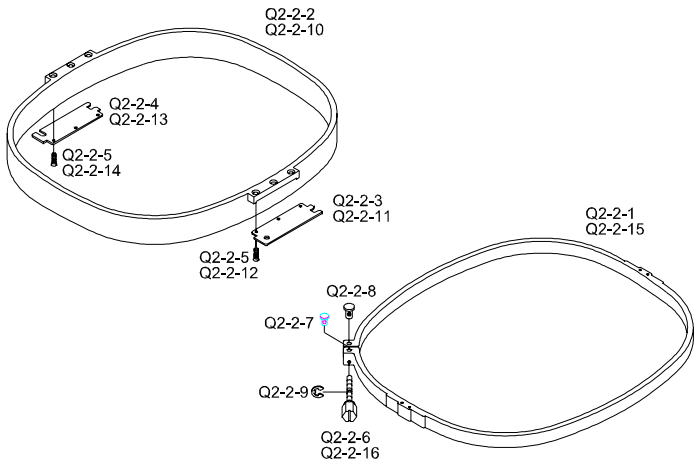

Note

Ref.No	Part No.	Part Name	Application date	Interchangeability	Hardware	Q'ty	Remarks
Q2-2-1	08200200UH00	Tubular Frame (320*435)				12	
Q2-2-2	08200100UH00	Tubular Frame (320*435)				12	
Q2-2-3	17014PR-UK01	Tubular Holder "A"				12	
Q2-2-4	17015PR-UK01	Tubular Holder "B"				12	
Q2-2-5	10011SC-8119	Plus Screw (M3*L6)			O	36	
Q2-2-6	22044CW-UK01	Adjusting Bolt				12	
Q2-2-7	22045CW-UK01	Adjusting Bolt Guide				12	
Q2-2-8	22046CW-UK01	Adjusting Nut				12	
Q2-2-9	15159SR-4013	E-Ring (3@)				12	
Q2-2-10	22017BM-UH16	Sqaure Frame (312*312) Ass'Y				12	
Q2-2-11	08200300UH00	Tubular Frame Holder (L)				12	
Q2-2-12	15064AF-A001	C.S Screw (M3*L3.5)			O	24	
Q2-2-13	08200400UH00	Tubular Frame Holder (R)				12	
Q2-2-14	15064AF-A001	C.S Screw (M3*L3.5)			O	24	
Q2-2-15	22017BM-UH16	Sqaure Frame (312*312) Ass'Y				12	
Q2-2-16	22044CW-UK01	Adjusting Bolt				12	

Q2-3

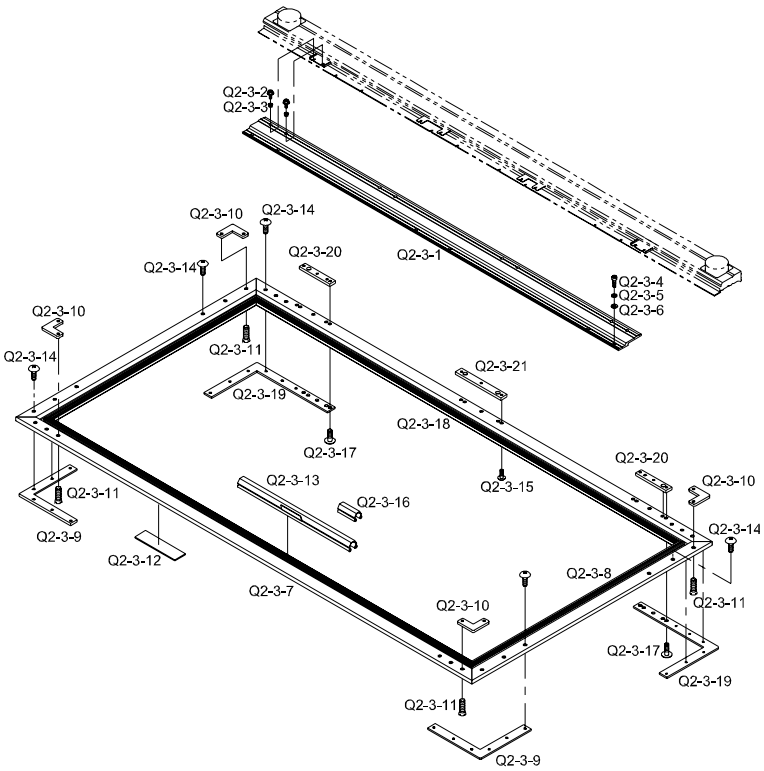

Note

Ref.No	Part No.	Part Name	Application date	Interchangeability	Hardware	Q'ty	Remarks
Q2-3-1	09600300UH60	Square Frame Connecting Plate				2	
Q2-3-2	05012MC-7113	Cap Frame Fixed Screw			O	21	
Q2-3-3	18070CW-A021	Insert Bushing				21	
Q2-3-4	05008SC-4113	Hex.Socket Bolt (M4*L16)			O	90	
Q2-3-5	18014SW-3115	Spring Washer (@4-No2)			O	90	
Q2-3-6	18015SW-3111	Washer (4@)			O	90	
Q2-3-7	GP-008802-00	Front Border Frame Sash L=1344				2	
Q2-3-8	24007AD-UK01	Border Frame Sash L=575				4	
Q2-3-9	24004PR-UK01	Connecting Plate "F"				4	
Q2-3-10	24011PR-T121	Connecting Plate "C"				8	
Q2-3-11	10010SC-8119	Plus Screw (M3*L5)			O	16	
Q2-3-12	24016SF-T121	Felt				19	
Q2-3-13	18084PR-A001	Embroidery Frame Clip L=300				12	
	18085PR-A001	Embroidery Frame Clip L=250				8	
	18085PR-T121	Embroidery Frame Clip L=220				8	
Q2-3-14	02044SC-3123	Truss Screw (M5*L8)			O	24	
Q2-3-15	15042SC-3123	Truss Screw (M4*L6)			O	3	
Q2-3-16	18086PR-B001	Frame Clip Support				36	
Q2-3-17	02010SC-3123	Truss Screw (M4*L8)			O	6	
Q2-3-18	GP-008801-00	Rear Border Frame Sash L=1344				2	
Q2-3-19	24004PR-UK02	Connecting Plate "E"				4	
Q2-3-20	24008PR-UK02	Square Frame Fixing Plate A				4	
Q2-3-21	24011PR-UK02	Square Frame Fixing Plate B				2	

FRAME (UH1508D-45)

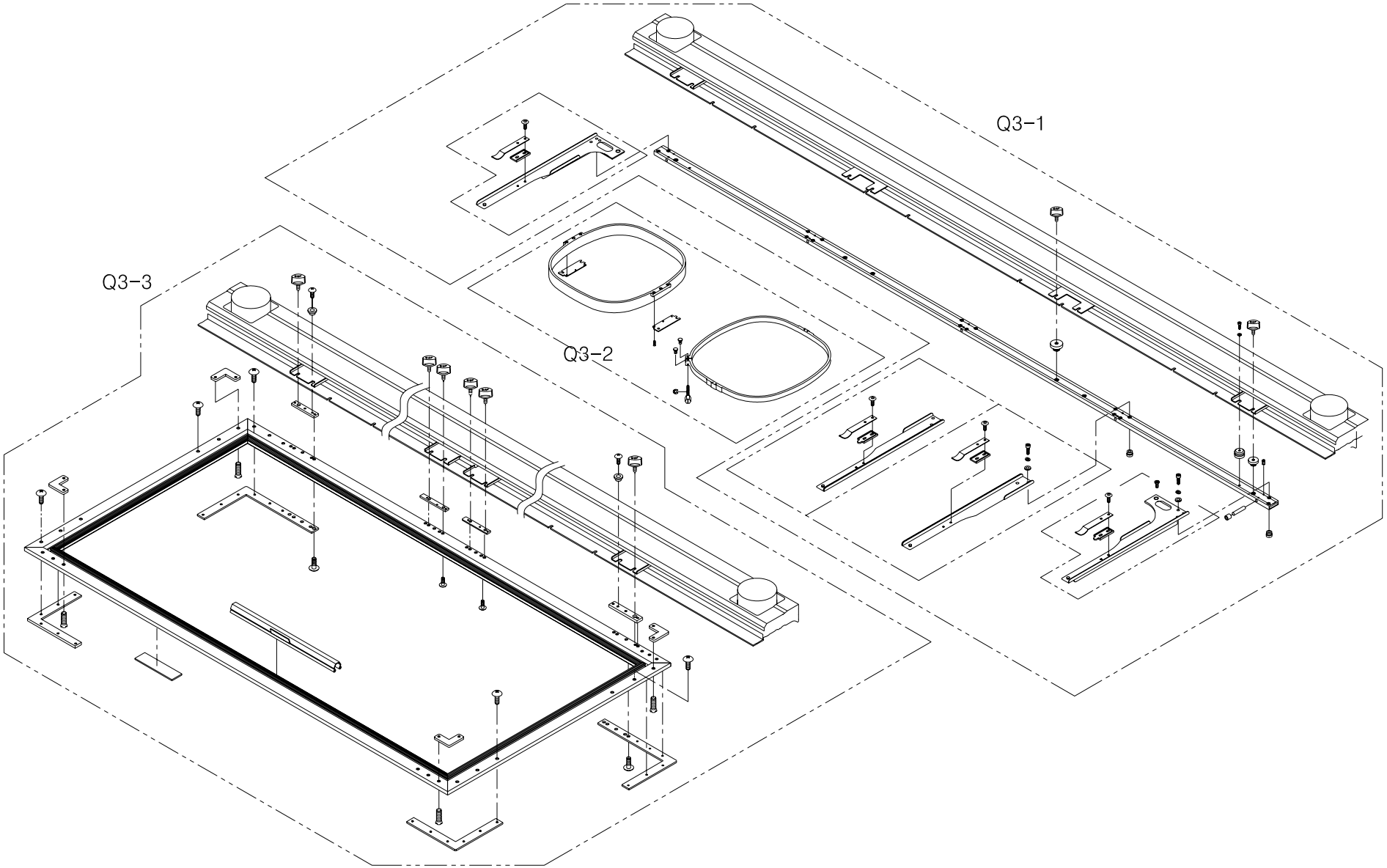

Q3-1

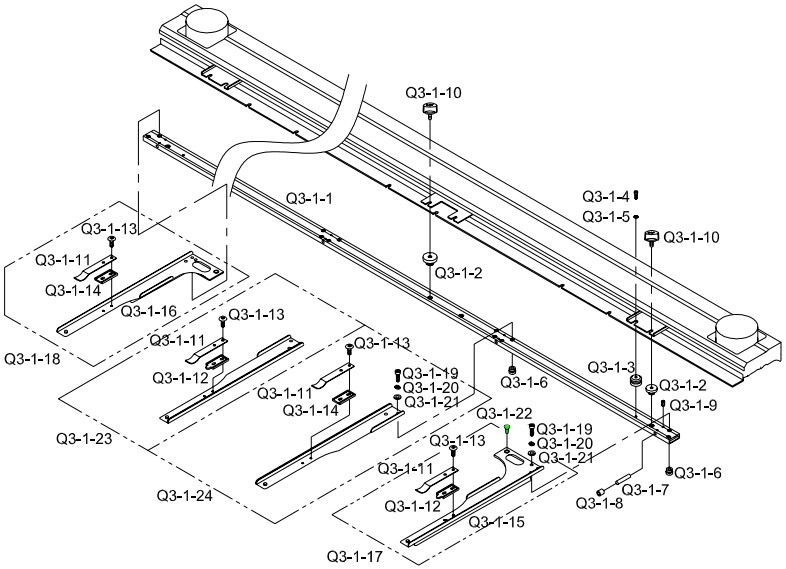

Note

Ref.No	Part No.	Part Name	Application date	Interchangeability	Hardware	Q'ty	Remarks
Q3-1-1	GP-004172-00	Tubular Frame	Aug,25,04 ~ Sep,03,06	X		1	
	GP-004172-01		Sep,04,06 ~	△		1	
Q3-1-2	22002CW-UK01	Screw Bush "A"				6	
Q3-1-3	22003CW-UK01	Location Block			O	2	
Q3-1-4	11029SC-4113	Hex. Socket Bolt (M4*L20)			O	2	
Q3-1-5	05009SW-1111	Washer (@4-L)				2	
Q3-1-6	GP-010408-00	SCREW BUSH C				32	
Q3-1-7	22007BR-UK01	Bearing Pin				5	
Q3-1-8	22009BR-UK01	Needle Bearing (Taf51010)				5	
Q3-1-9	03022SC-4517	Hex. Socket Set Screw(M4*L5)			O	10	
Q3-1-10	09000100U000	Tubular Frame Fixing Screw				6	
Q3-1-11	22005PR-T121	Clip				8	
Q3-1-12	22004PM-T121	Clip Bracket (R)				4	
Q3-1-13	09100200U000	Fixed Clip Bracket Screw				16	
Q3-1-14	22003PM-T121	Clip Bracket (L)				4	
Q3-1-15	09100100U000	Attachment (R)				1	
Q3-1-16	09200100U000	Attachment (L)				1	
Q3-1-17	09100000U000	Attachment (R)				1	
Q3-1-18	09200000U000	Attachment (L)				1	
Q3-1-19	02015SC-7113	Hex.Socket Bolt(M4*L10)			O	16	
Q3-1-20	18014SW-3115	Spring Washer (@4-No2)			O	16	
Q3-1-21	18015SW-3111	Washer (4@)			O	16	
Q3-1-22	02002SC-7119	Pluss Screw (M4*L8)			O	2	
Q3-1-23	09100410U000	Attachment (Set-L)				3	
Q3-1-24	09100510U000	Attachment (Set-R)				3	

Q3-2

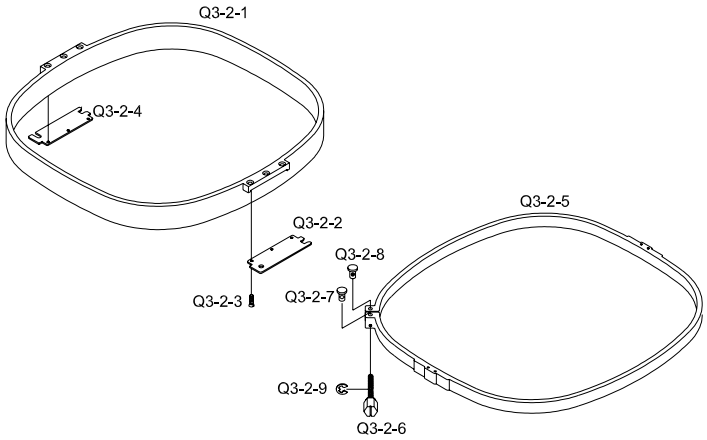

Note

Ref.No	Part No.	Part Name	Application date	Interchangeability	Hardware	Q'ty	Remarks
Q3-2-1	08200100UH00	Tubular (Inner) 45*44				8	
Q3-2-2	17014PR-UK01	Tubular Holder "A"				8	
Q3-2-3	10011SC-8119	Plus Screw (M3*L6)			O	48	
Q3-2-4	17015PR-UK01	Tubular Holder "B"				8	
Q3-2-5	08200200UH00	Tubular (Outer) 45*44				8	
Q3-2-6	22044CW-UK01	Adjusting Bolt				8	
Q3-2-7	22045CW-UK01	Adjusting Bolt Guide				8	
Q3-2-8	22046CW-UK01	Adjusting Nut				8	
Q3-2-9	15159SR-4013	E-Ring (3@)				8	

Q3-3

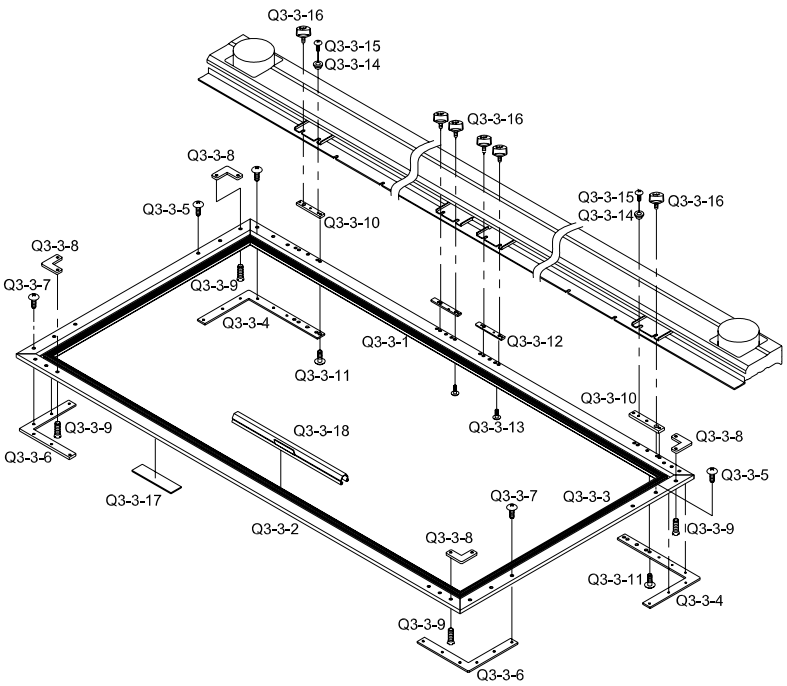

Note

Ref.No	Part No.	Part Name	Application date	Interchangeability	Hardware	Q'ty	Remarks
Q3-3-1	GP-004174-00	Front Border Frame Sash L=1744				2	
Q3-3-2	GP-004175-00	Rear Border Frame Sash L=1744				2	
Q3-3-3	24007AD-UK01	Border Frame Sash L=575				4	
Q3-3-4	08300300UH00	Connecting Plate "E"				4	
Q3-3-5	02044SC-3123	Truss Screw (M5*L8)			O	24	
Q3-3-6	24004PR-UK01	Connecting Plate "F"				4	
Q3-3-7	02044SC-3123	Truss Screw (M5*L8)			O	24	
Q3-3-8	24011PR-T121	Connecting Plate "C"				8	
Q3-3-9	10010SC-8119	Plus Screw (M3*L5)			O	16	
Q3-3-10	24008PR-UK02	Square Frame Fixiing Plate A				4	
Q3-3-11	15042SC-3123	Truss Screw (M4*L6)			O	12	
Q3-3-12	24011PR-UK02	Square Frame Fixiing Plate B				8	
Q3-3-13	15042SC-3123	Truss Screw (M4*L6)			O	24	
Q3-3-14	18025PM-UK01	Location Block				4	
Q3-3-15	18153SC-3123	Plus Screw (M4*L10)			O	4	
Q3-3-16	22010PM-UK01	Tubular Frame Fixing Screw				12	
Q3-3-17	24016SF-T121	Felt				19	
Q3-3-18	18084PR-A001	Embroidery Frame Clip L=300				18	
	18085PR-A001	Embroidery Frame Clip L=250				6	
	18085PR-T121	Embroidery Frame Clip L=220				2	

FRAME (UH1512D-45)

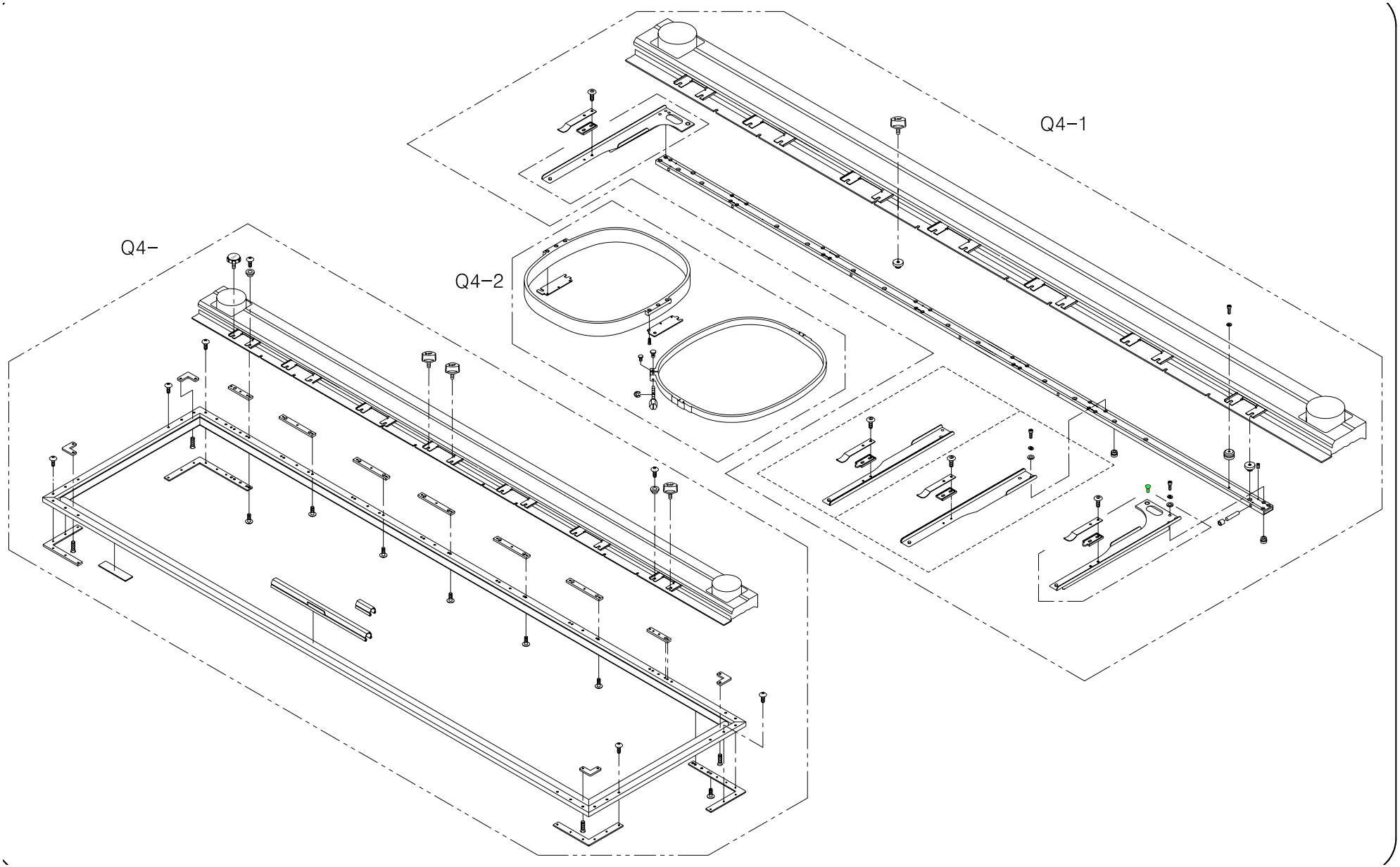

Q4-1

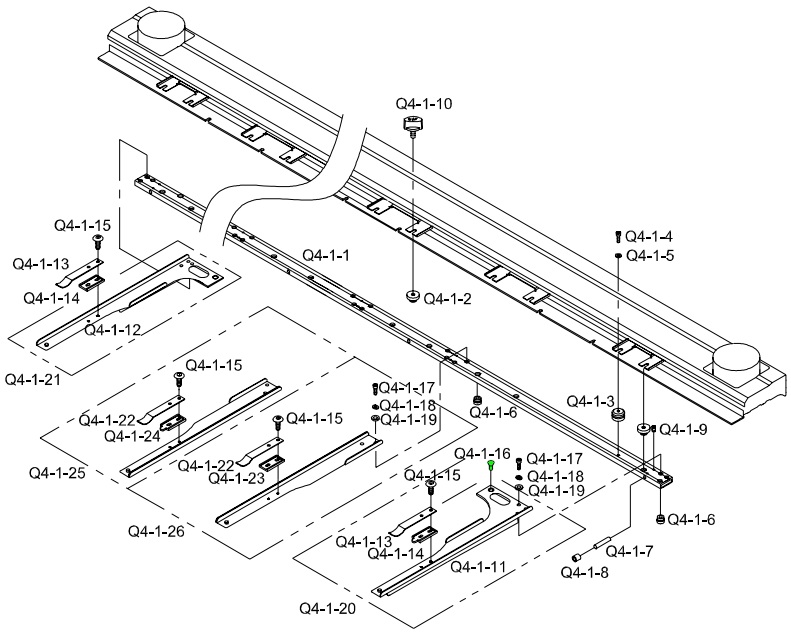

Note

Ref.No	Part No.	Part Name	Application date	Interchangeability	Hardware	Q'ty	Remarks
Q4-1-1	08100100UH60	Tubular Frame L2404				1	
Q4-1-2	22002CW-UK01	Screw Bush "A"				20	
Q4-1-3	22003CW-UK01	Location Block				4	
Q4-1-4	11029SC-4113	Hex. Socket Bolt (M4*L20)			O	4	
Q4-1-5	05009SW-1111	Washer (@4-L)			O	4	
Q4-1-6	10500110B000	SCREW BUSH C (M8*P0.75)				56	
Q4-1-7	22007BR-UK01	Bearing Pin				14	
Q4-1-8	22009BR-UK01	Needle Bearing (Taf51010)				14	
Q4-1-9	03022SC-4517	Hex. Socket Set Screw(M4*L5)			O	28	
Q4-1-10	09000100U000	Tubular Frame Fixing Screw				20	
Q4-1-11	09100100U000	Attachment (R)				2	
Q4-1-12	09200100U000	Attachment (L)				2	
Q4-1-13	22005PR-T121	Clip				4	
Q4-1-14	22004PM-T121	Clip Bracket (R)				2	
Q4-1-15	09100200U000	Fixed Clip Bracket Screw				48	
Q4-1-16	02002SC-7119	Pluss Screw (M4*L8)			O	4	
Q4-1-17	02015SC-7113	Hex.Socket Bolt(M4*L10)			O	52	
Q4-1-18	18014SW-3115	Spring Washer (@4-No2)			O	52	
Q4-1-19	18015SW-3111	Washer (4@)			O	52	
Q4-1-20	09100000U000	Attachment (R)				2	
Q4-1-21	09200000U000	Attachment (L)				2	
Q4-1-22	22005PR-T121	Clip				20	
Q4-1-23	22004PM-T121	Clip Bracket (R)				10	
Q4-1-24	22003PM-T121	Clip Bracket (R)				10	
Q4-1-25	09100410U000	Attachment (Set-L)				10	
Q4-1-26	09100510U000	Attachment (Set-R)				10	

Q4-2

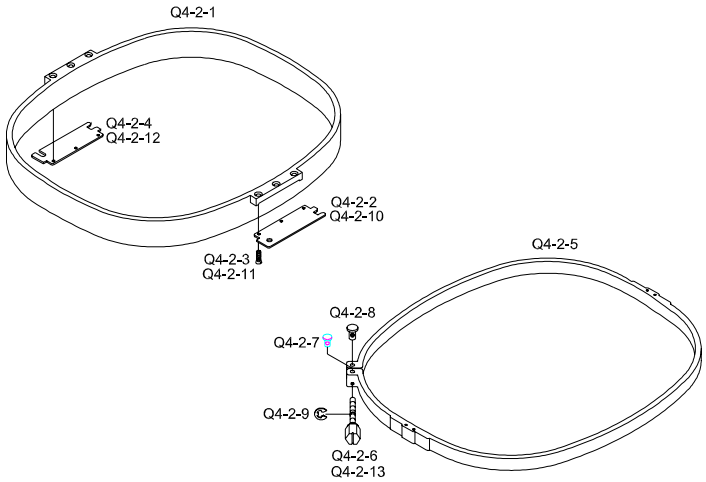

Note

Ref.No	Part No.	Part Name	Application date	Interchangeability	Hardware	Q'ty	Remarks
Q4-2-1	08200100UH00	Tubular (Inner)				24	
Q4-2-2	17014PR-UK01	Tubular Holder "A"				24	
Q4-2-3	10011SC-8119	Plus Screw (M3*L6)			O	72	
Q4-2-4	17015PR-UK01	Tubular Holder "B"				24	
Q4-2-5	08200200UH00	Tubular (Outer)				24	
Q4-2-6	22044CW-UK01	Adjusting Bolt				24	
Q4-2-7	22045CW-UK01	Adjusting Bolt Guide				24	
Q4-2-8	22046CW-UK01	Adjusting Nut				24	
Q4-2-9	15159SR-4013	E-Ring (3@)				24	
Q4-2-10	08200300UH00	Tubular Frame Holder (L)				24	
Q4-2-11	15064AF-A001	C.S Screw (M3*L3.5)			O	96	
Q4-2-12	08200400UH00	Tubular Frame Holder (R)				24	
Q4-2-13	22044CW-UK01	Adjusting Bolt				24	

Q4-3

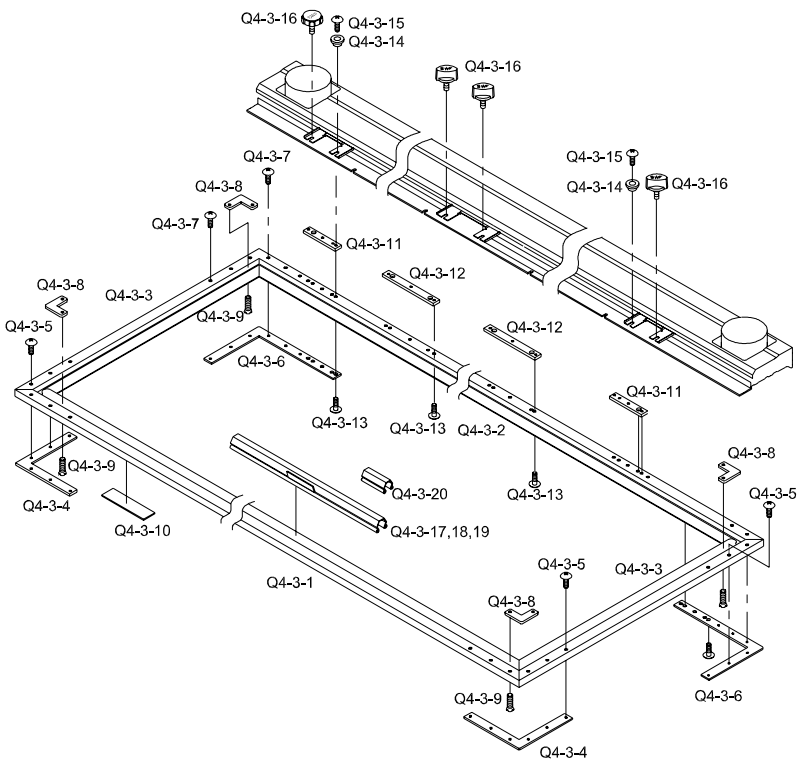

Note

Ref.No	Part No.	Part Name	Application date	Interchangeability	Hardware	Q'ty	Remarks
Q4-3-1	08300100UH00	Square Frame "A" L=2544				2	
Q4-3-2	08300200UH00	Square Frame "B" L=2544				2	
Q4-3-3	24007AD-UK01	Border Frame Sash L=575				4	
Q4-3-4	24004PR-UK01	Connecting Plate "F"				4	
Q4-3-5	02044SC-3123	Truss Screw (M5*L8)			O	24	
Q4-3-6	08300300UH00	Connect Plate (E)				4	
Q4-3-7	02044SC-3123	Truss Screw (M5*L8)			O	24	
Q4-3-8	24011PR-T121	Connecting Plate "C"				8	
Q4-3-9	10010SC-8119	Plus Screw (M3*L5)			O	16	
Q4-3-10	24016SF-T121	Felt				38	
Q4-3-11	24008PR-UK02	Square Frame Fixing Plate A				4	
Q4-3-12	24011PR-UK02	Square Frame Fixing Plate B				8	
Q4-3-13	15042SC-3123	Truss Screw (M4*L6)			O	36	
Q4-3-14	18025PM-UK01	Location Block				4	
Q4-3-15	18153SC-3123	Plus Screw (M4*L10)			O	4	
Q4-3-16	09000100U000	Tubular Frame Fixing Screw				16	
Q4-3-17	18084PR-A001	Embroidery Frame Clip L-300				32	
Q4-3-18	18085PR-A001	Embroidery Frame Clip L-250				4	
Q4-3-19	18085PR-T121	Embroidery Frame Clip L-220				4	
Q4-3-20	18086PR-B001	Frame Clip Support				72	

R. Index

Part No.	Part Name	Page	Ref.No
2.11E+46	Cable	125	N-1-16
01000100UH80	TOP SHAFT PULLEY COVER	127	N-3-1
01000100UH80	HAMMER CASTER SET (URETHANE)	134	P-2-10
01000300UH61	BEAM BRACKET COVER (L)	133	P-1-3
01000400UH61	BEAM BRACKET COVER (R)	133	P-1-4
01000500H000	SPOOL STAND STUD BOLT L113	101	J-1-15
01000500UH61	BODY FRONT COVER A	133	P-1-8
01000600UH61	BODY FRONT COVER B	133	P-1-9
01000700UH61	BODY FRONT COVER C	133	P-1-10
01001000UH61	BODY FRONT COVER F	133	P-1-13
01001100H000	Ball Bearing (6005Zz)	18	B-5-2
01001100H000	Ball Bearing (6005Zz)	25	C-5-9
01001100H000	BALL BEARING(6005ZZ)	35	E-3-11
01001100H000	BALL BEARING(6005ZZ)	41	E1-3-11
01001100UH61	BODY FRONT COVER G	133	P-1-14
01001100UK00	TOP SHAFT PULLEY COVER B	127	N-3-18
01001400UK00	Top Shaft Cover (L)	128	N-4-4
01001800UH60	UPPER SHAFT PULLEY COVER (R)	127	N-3-2
01002000UH60	UPPER SHAFT COVER (L-2)	128	N-4-14
01002200UH60	Oil Tank Cover (L) UH1504D	24	C-4-9
01002200UH60	Oil Tank Cover (L) UH1506D	24	C-4-9
01002200UH60	Oil Tank Cover (L) UH1208D	24	C-4-9
01002600UH60	X-MOTOR CABLE HOLDER	113	L-1-5
01002700UH60	Rubber For Body Support	134	P-2-1
01002800UH60	Body Support	134	P-2-2
01002900UH60	TABLE SUPPORT (A)	133	P-1-16
01-002A-AT01	COOLING FAN	122	M-2-9
01-002B-AU12	FAN Cover	122	M-2-10
01-002M-AU12	FAN Screw (M4xL35)	122	M-2-11
01004SC-UK01	HEX. BOLT (M20*L60)	134	P-2-4
01-005A-BTO1	Control Box FAN	120	M-1-33
01007SW-1111	WASHER(@10)	35	E-3-4
01007SW-1111	WASHER(@10)	41	E1-3-4
01008SW-9115	SPRING WASHER(@10)	35	E-3-3
01008SW-9115	SPRING WASHER(@10)	41	E1-3-3
01029BR-A001	BALL BEARING 6004Z	33	E-1-5
01029BR-A001	BALL BEARING 6004Z	39	E1-1-5
01029BR-A001	Bearing(6004zz)	66	H2-2-9
01029BR-A001	Bearing(6004zz)	74	H3-2-9
01-037S-2070	Earth Screw (M4xL8)	122	M-2-14
01101300A000	Hook Shaft Collar	15	B-2-5
01101700U000	LOW SHAFT GEAR	12	A-2-28
01102000B000	Bearing Bushing	30	D-4-20
01102000B000	COLLAR"B"	34	E-2-5
01102000B000	COLLAR"B"	40	E1-2-5
01200100UH00	Bed	12	A-2-1
01300105U000	Take-Up Guide Rail (L) (15C)	21	C-1-3
01300205U000	Take-Up Guide Rail (M)(15C)	21	C-1-3
01301600H000	Hook Oil Supply Nipple	15	B-2-3
01301600H000	Hook Oil Supply Nipple	15	B-2-16
01303700H000	TENSION PLATE PIN	46	F-1-31
01303800U000	Cover Rubber Cap	24	C-4-12
01400105U000	Take-Up Guide Rail (R)(15C)	21	C-1-3

Part No.	Part Name	Page	Ref.No
02-0000-EMB1	Head On/Off S/W Board 9C-15C	53	G-2-15
02000110UH60	LOW SHAFT A [1104mm] UH1512D	34	E-2-17
02000300UH60	Mes Driving Shaft "A" L=2015.5 UH1512D	27	D-1-17
02000400B000	CABLE COVER HOLDER	113	L-1-1
02000700T000	Push B/T Switch	115	L-2-3
02000910T000	MAGNETIC S/W FIXED BRACKET	115	L-2-10
02001100T000	SWITCH PLATE	115	L-2-11
02001200T000	RESISTER 5/20W (CE)	115	L-2-12
02001300T000	BRACKET STOPPER (CE)	115	L-2-13
02-001B-SW67	Switch Cover	121	M-1-43
02002SC-7119	Plus Screw (M4*L8)	23	C-3-2
02002SC-7119	Pluss Screw (M4*L8)	52	G-1-7
02002SC-7119	PLUSS SCREW (M4*L8)	101	J-1-2
02002SC-7119	Pluss Screw (M4*L8)	136	Q1-1-15
02002SC-7119	Pluss Screw (M4*L8)	144	Q3-1-22
02002SC-7119	Pluss Screw (M4*L8)	148	Q4-1-16
02004BR-T121	Hook Shaft Bearing Washer	12	A-2-4
02004SC-4113	HEX. SOCKET BOLT (M4*L8)	62	H1-6-15
02004SC-4113	HEX. SOCKET BOLT (M4*L8)	77	H3-5-17
02004SC-4113	HEX. SOCKET BOLT (M4*L8)	77	H3-5-21
02004SC-4113	HEX. SOCKET BOLT (M4*L8)	77	H3-5-26
02004SC-4113	HEX. SOCKET BOLT (M4*L8)	78	H3-6-8
02004SC-4113	HEX. SOCKET BOLT (M4*L8)	78	H3-6-12
02004SC-4113	HEX. SOCKET BOLT (M4*L8)	79	H3-6-47
02004SC-4113	HEX. SOCKET BOLT (M4*L10)	87	H4-6-24
02009PI-T121	Spring Pin	30	D-4-23
02009SC-A001	Side Cover Screw	22	C-2-3
02009SC-A001	Side Cover Screw	93	I-3-9
02009SC-A001	Side Cover Screw	99	I1-3-9
02010SC-3123	Truss Screw (M4*L8)	53	G-2-8
02010SC-3123	TRUSS SCREW (M4*L8)	79	H3-6-58
02010SC-3123	TRUSS SCREW (M4*L8)	115	L-2-14
02010SC-3123	TRUSS SCREW (M4*L8)	133	P-1-29
02010SC-3123	Truss Screw (M4*L8)	138	Q1-3-14
02010SC-3123	Truss Screw (M4*L8)	142	Q2-3-17
02010SC-A001	Take-Up Driving Lever "A"	15	B-2-7
02010SC-A001	SCREW (9/64,N40,L8)	17	B-4-2
02010SC-A001	SCREW (9/64,N40,L8)	19	B-6-6
02011SC-3125	Rotary Hook Support Screw	94	I-4-5
02014SC-7113	Hex. Socket Bolt (M4*L5)	27	D-1-3
02015SC-4113	HEX.SOCKET BOLT(M4*L10)	77	H3-5-5
02015SC-4113	HEX.SOCKET BOLT(M4*L10)	77	H3-5-9
02015SC-4113	HEX.SOCKET BOLT(M4*L10)	77	H3-5-13
02015SC-7113	Hex.Socket Bolt(M4*L10)	27	D-1-16
02015SC-7113	Hex.Socket Bolt(M4*L10)	27	D-1-20
02015SC-7113	Hex.Socket Bolt(M4*L10)	27	D-1-22
02015SC-7113	Hex.Socket Bolt(M4*L10)	30	D-4-6
02015SC-7113	Hex.Socket Bolt(M4*L10)	31	D-5-2
02015SC-7113	HEX.SOCKET BOLT(M4*L8)	33	E-1-20
02015SC-7113	HEX.SOCKET BOLT(M4*L8)	39	E1-1-20
02015SC-7113	Hex.Socket Bolt(M4*L8)	47	F-2-18
02015SC-7113	Hex.Socket Bolt(M4*L10)	56	H1-1-15
02015SC-7113	Hex.Socket Bolt(M4*L10)	64	H2-1-15

Part No.	Part Name	Page	Ref.No
02015SC-7113	Hex.Socket Bolt(M4*L10)	69	H2-5-4
02015SC-7113	HEX.SOCKET BOLT(M4*L10)	70	H2-6-18
02015SC-7113	Hex.Socket Bolt(M4*L10)	72	H3-1-15
02015SC-7113	Hex.Socket Bolt(M4*L10)	81	H4-1-15
02015SC-7113	Hex.Socket Bolt(M4*L10)	86	H4-5-5
02015SC-7113	Hex.Socket Bolt(M4*L10)	91	I-1-39
02015SC-7113	Hex.Socket Bolt(M4*L10)	94	I-4-23
02015SC-7113	Hex.Socket Bolt(M4*L10)	97	I1-1-39
02015SC-7113	HEX.SOCKET BOLT(M4*L10)	102	J-1-6
02015SC-7113	Hex.Socket Bolt(M4*L10)	105	K-2-20
02015SC-7113	HEX.SOCKET BOLT(M4*L10)	127	N-3-15
02015SC-7113	Hex.Socket Bolt(M4*L10)	128	N-4-5
02015SC-7113	Hex.Socket Bolt(M4*L10)	136	Q1-1-16
02015SC-7113	Hex.Socket Bolt(M4*L10)	144	Q3-1-19
02015SC-7113	Hex.Socket Bolt(M4*L10)	148	Q4-1-17
02017PM-A001	CABLE RING	126	N-2-20
02019BM-T121	Needle Plate Set(Cap)	30	D-4-29
02019PR-T121	Needle Plate(Cap)	30	D-4-30
02023ET-A001	Top Shaft Cover Magnet	128	N-4-9
02023SC-7113	Hex. Socket Bolt (M4*L8)	12	A-2-9
02023SC-7113	Hex. Socket Bolt (M4*L8)	14	B-1-3
02023SC-7113	Hex. Socket Bolt (M4*L8)	16	B-3-9
02023SC-7113	Hex. Socket Bolt (M4*L8)	23	C-3-10
02023SC-7113	Hex. Socket Bolt (M4*L8)	23	C-3-17
02023SC-7113	Hex. Socket Bolt (M4*L8)	31	D-5-3
02023SC-7113	HEX.SOCKET BOLT(M4*L8)	34	E-2-20
02023SC-7113	HEX.SOCKET BOLT(M4*L8)	40	E1-2-20
02023SC-7113	Hex.Socket Bolt(M4*L5)	48	F-2-25
02023SC-7113	Hex.Socket Bolt (M4*L8)	53	G-2-11
02023SC-7113	Hex. Socket Bolt (M4*L8)	54	G-3-2
02023SC-7113	Hex. Socket Bolt (M4*L8)	61	H1-5-10
02023SC-7113	HEX.SOCKET BOLT (M4*L8)	62	H1-6-8
02023SC-7113	Hex. Socket Bolt (M4*L8)	69	H2-5-10
02023SC-7113	Hex. Socket Bolt (M4*L8)	70	H2-6-9
02023SC-7113	HEX.SOCKET BOLT (M4*L8)	79	H3-6-43
02023SC-7113	Hex. Socket Bolt (M4*L8)	86	H4-5-11
02023SC-7113	Hex. Socket Bolt (M4*L8)	86	H4-5-22
02023SC-7113	Hex. Socket Bolt (M4*L8)	87	H4-6-9
02023SC-7113	HEX.SOCKET BOLT (M4*L8)	87	H4-6-33
02023SC-7113	Hex.Socket Bolt (M4*L8)	88	H4-6-37
02023SC-7113	Hex.Socket Bolt (M4*L16)	91	I-1-43
02023SC-7113	Hex.Socket Bolt (M4*L8)	91	I-1-47
02023SC-7113	Hex.Socket Bolt (M4*L8)	92	I-2-14
02023SC-7113	Hex.Socket Bolt (M4*L16)	97	I1-1-43
02023SC-7113	Hex.Socket Bolt (M4*L8)	97	I1-1-47
02023SC-7113	Hex.Socket Bolt (M4*L8)	98	I1-2-14
02023SC-7113	HEX.SOCKET BOLT (M4*L8)	127	N-3-4
02023SC-7113	Hex.Socket Bolt(M4*L8)	128	N-4-6
02025PR-UK02	TOP SHAFT COVER BRACKET	127	N-3-13
02026EL-UK01	START SWITCH SET	126	N-2-4
02026SC-A001	Stand	130	O-1-17
02027EL-UK01	S/B SWITCH SET	126	N-2-3
02028SW-9115	Spring Washer (@4)	50	F-4-3

R. Index

Part No.	Part Name	Page	Ref.No
02028SW-9115	Spring Washer (@4)	56	H1-1-16
02028SW-9115	Spring Washer (@4)	59	H1-3-15
02028SW-9115	Spring Washer (@4)	61	H1-5-11
02028SW-9115	Spring Washer (@4)	64	H2-1-16
02028SW-9115	Cam Roller Stud (A)	67	H2-3-13
02028SW-9115	Spring Washer (@4)	67	H2-3-15
02028SW-9115	Spring Washer (@4)	72	H3-1-16
02028SW-9115	Cam Roller Stud (A)	75	H3-3-13
02028SW-9115	Spring Washer (@4)	75	H3-3-15
02028SW-9115	Spring Washer (@4)	81	H4-1-16
02028SW-9115	Spring Washer (@4)	84	H4-3-15
02028SW-9115	Spring Washer (@4)	86	H4-5-6
02028SW-9115	Spring Washer (@4)	86	H4-5-12
02028SW-9115	Spring Washer (@4)	86	H4-5-23
02028SW-9115	Spring Washer (@4)	87	H4-6-10
02028SW-9115	SPRING WASHER (@4)	102	J-1-7
02028SW-9115	Spring Washer (@4)	105	K-2-21
02028SW-9115	SPRING WASHER (@4)	127	N-3-16
02029SN-9311	Hex. Nut (M4-No2)	30	D-4-3
02029SN-9311	Hex. Nut (M4-No2)	31	D-5-12
02030SC-T121	Bed Cover Screw(9/64" 40)	94	I-4-7
02030SC-T121	BED COVER SCREW(9/64" 40)	105	K-2-31
02030SC-T121	BED COVER SCREW(9/64" 40)	106	K-3-8
02030SC-T121	BED COVER SCREW(9/64" 40)	106	K-3-10
02030SC-T121	BED COVER SCREW(9/64" 40)	106	K-3-31
02030SC-T121	BED COVER SCREW(9/64" 40)	107	K-4-15
02030SC-T121	BED COVER SCREW(9/64" 40)	108	K-5-13
02030SC-T121	BED COVER SCREW(9/64" 40)	108	K-5-15
02030SC-T121	BED COVER SCREW(9/64" 40)	110	K-6-16
02030SC-T121	BED COVER SCREW(9/64" 40)	110	K-6-18
02030SW-B001	Washer (5@)	18	B-5-4
02031PR-UK02	PULLEY COVER BRACKET	127	N-3-9
02031SC-7113	Hex. Socket Screw(M5*L10)	18	B-5-3
02031SC-7113	Hex. Socket Screw(M5*L10)	29	D-3-2
02031SC-7113	Hex. Socket Screw(M5*L10)	29	D-3-14
02031SC-7113	Hex. Socket Screw(M5*L10)	125	N-1-3
02031SC-7113	HEX. SOCKET SCREW(M5*L10)	127	N-3-10
02033SC-4113	Hex. Socket Bolt	56	H1-1-3
02033SC-4113	Hex. Socket Bolt	81	H4-1-2
02036SN-1211	HEX. NUT (M20-NO2)	134	P-2-5
02037PR-A001	MAIN POWER S/W BRACKET	115	L-2-16
02038SC-9131	PLUS SCREW (M5*L10)	115	L-2-17
02043PR-A001	MAIN POWER S/W COVER	115	L-2-18
02043RB-W121	BODY SUPPORT RUBBER CAP	134	P-2-6
02044SC-3123	TRUSS SCREW (M5*L8)	115	L-2-2
02044SC-3123	TRUSS SCREW (M5*L8)	115	L-2-5
02044SC-3123	TRUSS SCREW (M5*L8)	115	L-2-19
02044SC-3123	TRUSS SCREW (M5*L8)	133	P-1-2
02044SC-3123	TRUSS SCREW (M5*L8)	133	P-1-5
02044SC-3123	TRUSS SCREW (M5*L8)	133	P-1-7
02044SC-3123	TRUSS SCREW (M5*L8)	133	P-1-15
02044SC-3123	TRUSS SCREW (M5*L8)	133	P-1-20
02044SC-3123	TRUSS SCREW (M5*L8)	133	P-1-27

Part No.	Part Name	Page	Ref.No
02044SC-3123	Truss Screw (M5*L8)	138	Q1-3-5
02044SC-3123	Truss Screw (M5*L8)	142	Q2-3-14
02044SC-3123	Truss Screw (M5*L8)	146	Q3-3-5
02044SC-3123	Truss Screw (M5*L8)	146	Q3-3-7
02044SC-3123	Truss Screw (M5*L8)	150	Q4-3-5
02044SC-3123	Truss Screw (M5*L8)	150	Q4-3-7
02053PR-UK01	Cable Clamp	113	L-1-9
02054PR-A001	MAIN MOTOR PULLEY COVER	133	P-1-6
02054RB-UK01	Clamp Rubber	113	L-1-8
02062PR-UI12	CABLE HOLDER	126	N-2-5
02063SW-1111	Washer(@4)	12	A-2-10
02063SW-1111	Washer(@4)	86	H4-5-7
02097ET-B001	MODEL NAME PLATE	133	P-1-28
02100100UH60	MAIN CALBE	115	L-2-20
02100300U000	Hook Shaft	12	A-2-19
02100400U000	Mes Driving Lever	30	D-4-5
02101000H000	Plate To B/B Cable	53	G-2-13
02101300U040	X-Step Motor Driving Power	60	H1-4-37
02101300U040	Cable (Sh-13-1)	79	H3-6-55
02101800B000	PLATE LED S/W BOARD CABLE	53	G-2-14
02101ET-UK01	BRAND MARK	133	P-1-24
02103903H000	Wheel Earth 6-9-12C	54	G-3-9
02103ET-UK01	EMERGENCY SWITCH STICKER	126	N-2-15
02105610U040	Sh-56-2	113	L-1-13
02105700U040	Cable (Sh-57-2)	113	L-1-12
02105900U000	Sh-59	113	L-1-16
02106000U040	Cable (Sh-60-2)	113	L-1-14
02106400UH80	CABLE (Sh-64-5)	43	E1-5-20
02106500UH80	Sh-65-5	37	E-5-19
02106600U040	Sh-66-2	91	I-1-50
02106600U040	Sh-66-2	97	I1-1-50
02106700U040	Sh-66-2	91	I-1-51
02106700U040	Sh-66-2	97	I1-1-51
02107300UH80	Cable (Sh-73)	56	H1-1-18
02107300UH80	Cable (Sh-73)	81	H4-1-18
03000100U020	X-Motor Fixing Block	60	H1-4-29
03000100UH00	Roller Plate Cover	87	H4-6-34
03000110H000	Cam Tightening Collar (@20)	18	B-5-5
03000110UH60	TOP SHAFT A [1497.7mm] UH1506D	35	E-3-19
03000120U000	TOP SHAFT Timing PULLEY	35	E-3-14
03000120U000	TOP SHAFT Timing PULLEY	41	E1-3-14
03000130U000	INDEX Timing PULLEY	33	E-1-9
03000130U000	INDEX Timing PULLEY	39	E1-1-9
03000200U000	TIMING BELT (25-S5M*L1025)	33	E-1-8
03000200U000	TIMING BELT (25-S5M*L1025)	39	E1-1-8
03000200UH80	X-Frame Support Bar Cover L	87	H4-6-27
03000200UH80	X-Frame Support Bar Cover R	87	H4-6-28
03000210UH60	TOP SHAFT B [1610mm] UH1506D	41	E1-3-19
03000300U000	IDLER	36	E-4-11
03000300U000	IDLER	42	E1-4-11
03000310UH60	LOW SHAFT A [1104mm] UH1506D	34	E-2-17
03000410UH60	LOW SHAFT B [1302.5mm] UH1506D	40	E1-2-17
03000500U000	Oil Tube Pin	14	B-1-5

Part No.	Part Name	Page	Ref.No
03000700TH00	Thread Lever Connect Link	27	D-1-11
03000900U000	TENSION ADJUSTING BLOCK	37	E-5-11
03000900U000	TENSION ADJUSTING BLOCK	43	E1-5-11
03000900U060	TENSION ADJUSTING BLOCK	37	E-5-15
03000900U060	TENSION ADJUSTING BLOCK	43	E1-5-15
03001100U000	Mes Driving Lever Shaft "A"	30	D-4-4
03001200U000	Mes Driving Lever Shaft "B"	31	D-5-13
03002610H000	Return Spring Stopper	90	I-1-34
03002610H000	Return Spring Stopper	96	I1-1-34
03002700H000	Return Spring	90	I-1-36
03002700H000	Return Spring	96	I1-1-36
03002700T000	Bearing Collar	57	H1-1-47
03002700T000	Bearing Collar	65	H2-1-47
03002700T000	Bearing Collar	73	H3-1-47
03002700T000	Bearing Collar	82	H4-1-47
03002800H000	Return Spring Stopper Washer	90	I-1-37
03002800H000	Return Spring Stopper Washer	96	I1-1-37
03002900H000	Return Spring Fix Pin Washer	91	I-1-40
03002900H000	Return Spring Fix Pin Washer	97	I1-1-40
03003000H000	Return Spring Fix Pin	91	I-1-38
03003000H000	Return Spring Fix Pin	97	I1-1-38
03003000UH60	Y-LM Guide Frame L620	64	H2-1-1
03003000UH60	Y-LM Guide Frame L620	72	H3-1-1
03003200A000	Needle Bar Drive Rink	17	B-4-5
03003300H000	Cam Shaft Fixing Block	90	I-1-6
03003300H000	Cam Shaft Fixing Block	96	I1-1-6
03003400UH60	Y-Drive Timing Pulley	64	H2-1-33
03003400UH60	Y-Drive Timing Pulley	72	H3-1-33
03003500H000	Motor Driving Cam Shaft	90	I-1-10
03003500H000	Motor Driving Cam Shaft	96	I1-1-10
03003500UH60	Y-Drive Timing Pulley	82	H4-1-49
03003800B000	Coupling	58	H1-2-9
03003800B000	Coupling	66	H2-2-14
03003800B000	Coupling	74	H3-2-14
03003800B000	Coupling	83	H4-2-9
03003800UH60	Plate For Y-Sensing	84	H4-3-8
03003810H000	Stud Bolt For Driving Plate	90	I-1-22
03003810H000	Stud Bolt For Driving Plate	96	I1-1-22
03003910H000	Upper Thread Driving Plate	90	I-1-16
03003910H000	Upper Thread Driving Plate	96	I1-1-16
03003SC-4113	Hex. Socket Bolt	19	B-6-2
03003SC-4113	Hex. Socket Bolt "B"(M8*L35)	56	H1-1-4
03003SC-4113	Hex. Socket Bolt "B"(M8*L35)	64	H2-1-3
03003SC-4113	Hex. Socket Bolt "B"(M8*L35)	66	H2-2-30
03003SC-4113	Hex. Socket Bolt "B"(M8*L35)	72	H3-1-3
03003SC-4113	Hex. Socket Bolt "B"(M8*L35)	74	H3-2-30
03003SC-4113	Hex. Socket Bolt "B"(M8*L35)	81	H4-1-3
03004110H000	DRIVING PLATE BLOCK B	90	I-1-23
03004110H000	DRIVING PLATE BLOCK B	96	I1-1-23
03004200HE00	Motor Driving Connect Plate	90	I-1-18
03004200HE00	Motor Driving Connect Plate	96	I1-1-18

R. Index

Part No.	Part Name	Page	Ref.No
03004400H000	Motor Driving Connect Bearing	90	I-1-19
03004400H000	Motor Driving Connect Bearing	96	I1-1-19
03004500H000	Connecting Plate Pin Washer	90	I-1-21
03004500H000	Connecting Plate Pin Washer	96	I1-1-21
03004700H000	Connecting Plate Stud Screw	90	I-1-30
03004700H000	Connecting Plate Stud Screw	96	I1-1-30
03004800H000	Connecting Plate Knuckle	90	I-1-29
03004800H000	Connecting Plate Knuckle	96	I1-1-29
03005100U000	Coupling "A"	58	H1-2-12
03005100U000	Coupling "A"	66	H2-2-20
03005100U000	Coupling "A"	74	H3-2-20
03005100U000	Coupling "A"	83	H4-2-12
03005210H000	Collar "A"	25	C-5-10
03005210H000	COLLAR "A"	35	E-3-12
03005210H000	COLLAR "A"	41	E1-3-12
03005MC-3123	Plus Screw (M3*L5)	92	I-2-3
03005MC-3123	Plus Screw (M3*L5)	98	I1-2-3
03006720HDK0	Coupling @20	35	E-3-21
03006720HDK0	Coupling @20	41	E1-3-21
03006MC-8118	PLUS SCREW (M3*L6)	70	H2-6-23
03007000UH60	Upper Thread Driving Shaft A(L=2175) UH1512D	91	I-1-41
03007010UH60	Upper Thread Driving Shaft A(L=976) UH1506D	91	I-1-41
03007110UH60	Upper Thread Driving Shaft B(L=1094)UH1506D	97	I1-1-41
03007SC-A001	Cam Base Screw	16	B-3-2
03008000H000	Ball Bearing 6800	17	B-4-22
03008100K000	Needle Bar Drive Bearing Bush	17	B-4-23
03008200I000	Arm Guard Plate(L)	22	C-2-1
03008300H000	Connecting Plate Stud Screw A	90	I-1-20
03008300H000	Connecting Plate Stud Screw A	96	I1-1-20
03008300I000	Arm Guard Plate(L) Bracket	22	C-2-2
03008500H000	Top Shaft Bearing Case "B"	25	C-5-5
03008600H000	Motor Cover Fixing Bracket	91	I-1-46
03008600H000	Motor Cover Fixing Bracket	97	I1-1-46
03008700H000	Balance Cam	18	B-5-7
03008800H000	Balance Cam Bracket	18	B-5-8
03010400UH00	Plate For Y-Sensing	59	H1-3-8
03010800UH00	TOP SHAFT PULLEY	35	E-3-16
03010800UH00	TOP SHAFT PULLEY	41	E1-3-16
03010800UH80	MAIN MOTOR PULLEY	37	E-5-9
03010800UH80	MAIN MOTOR PULLEY	43	E1-5-9
03010SR-4013	C-RING (@47)	35	E-3-8
03010SR-4013	C-RING (@47)	41	E1-3-8
03012000U000	LOW SHAFT SUPPORT BRACKET(L)	33	E-1-1
03012000UH60	LOW SHAFT SUPPORT BRACKET (R)	39	E1-1-1
03012200U000	INDICATOR	33	E-1-19
03012200U000	INDICATOR	39	E1-1-19
03013EL-T121	Encoder Set	24	C-4-1
03016SC-4113	Hex. Socket Bolt (M5*L15)	18	B-5-6
03016SC-4113	Hex. Socket Bolt (M5*L15)	25	C-5-6
03016SC-4113	Hex. Socket Bolt (M5*L15)	56	H1-1-10
03016SC-4113	Hex. Socket Bolt (M5*L15)	57	H1-1-40
03016SC-4113	Hex. Socket Bolt (M5*L15)	58	H1-2-13

Part No.	Part Name	Page	Ref.No
03016SC-4113	Hex. Socket Bolt (M5*L15)	65	H2-1-40
03016SC-4113	Hex. Socket Bolt (M5*L15)	73	H3-1-40
03016SC-4113	Hex. Socket Bolt (M5*L15)	81	H4-1-10
03016SC-4113	Hex. Socket Bolt (M5*L15)	82	H4-1-40
03016SC-4113	Hex. Socket Bolt (M5*L15)	83	H4-2-13
03016SC-4113	CAP FRAME SET SCREW	101	J-1-4
03016SC-4113	CAP FRAME SET SCREW	102	J-1-9
03016SC-4113	CAP FRAME SET SCREW	104	K-1-4
03016SC-4113	CAP FRAME SET SCREW	104	K-1-12
03016SC-4113	CAP FRAME SET SCREW	104	K-1-17
03020SC-A001	Drive Pin Screw 11/64,N40,L8	15	B-2-4
03020SC-A001	Drive Pin Screw 11/64,N40,L8	17	B-4-15
03020SC-A001	Drive Pin Screw 11/64,N40,L8	17	B-4-21
03020SC-A001	Drive Pin Screw 11/64-N40-L8	50	F-4-6
03022SC-4517	Hex.Socket Set Screw(M4*L5)	15	B-2-14
03022SC-4517	Hex. Socket Set Screw(M4*L5)	30	D-4-18
03022SC-4517	HEX. SOCKET SET SCREW(M4*L5)	34	E-2-26
03022SC-4517	HEX. SOCKET SET SCREW(M4*L5)	40	E1-2-26
03022SC-4517	Hex. Socket Set Screw(M4*L5)	45	F-1-7
03022SC-4517	Hex. Socket Set Screw(M4*L5)	79	H3-6-38
03022SC-4517	Hex. Socket Set Screw(M4*L5)	88	H4-6-44
03022SC-4517	Hex. Socket Set Screw(M4*L5)	136	Q1-1-9
03022SC-4517	Hex. Socket Set Screw(M4*L5)	144	Q3-1-9
03022SC-4517	Hex. Socket Set Screw(M4*L5)	148	Q4-1-9
03026SW-9115	SPRING WASHER (@6)	33	E-1-3
03026SW-9115	SPRING WASHER (@6)	35	E-3-6
03026SW-9115	SPRING WASHER (@6)	36	E-4-3
03026SW-9115	SPRING WASHER (@6)	37	E-5-7
03026SW-9115	SPRING WASHER (@6)	39	E1-1-3
03026SW-9115	SPRING WASHER (@6)	41	E1-3-6
03026SW-9115	SPRING WASHER (@6)	42	E1-4-3
03026SW-9115	SPRING WASHER (@6)	43	E1-5-7
03026SW-9115	SPRING WASHER (@6)	90	I-1-31
03026SW-9115	SPRING WASHER (@6)	96	I1-1-31
03031SN-A001	Pin. Nut (11/64-N=40)	23	C-3-12
03031SN-A001	Pin. Nut (11/64-N=40)	52	G-1-6
03031SN-A001	PIN. NUT (11/64,N=40)	102	J-1-13
03033CW-A001	Driver Pin	17	B-4-17
03034SW-A001	Reciprocator Washer	17	B-4-4
03037AF-A001	Driver Screw	57	H1-1-48
03037AF-A001	Driver Screw	65	H2-1-48
03037AF-A001	Driver Screw	73	H3-1-48
03037AF-A001	Driver Screw	82	H4-1-48
03042SF-T121	FELT "A"	17	B-4-24
03045SP-B001	Jump Spring	17	B-4-8
03046CW-B001	Jump Spring Guide	17	B-4-9
03047PM-CT01	Stopper-A'ssy	17	B-4-12
03048SW-A001	Reciprocator Washer	17	B-4-10
03050SC-4517	Hex. Socket Set Screw (M3*L3)	30	D-4-13
03062ET-A001	Cable Fastener	19	B-6-7
03065SC-A001	Guard Plate Screw	22	C-2-14
03068LM-BB00	Lm Guide Block Set (12C)	21	C-1-1
03068LM-H003	Lm Guide Block Set (15C)	21	C-1-1

Part No.	Part Name	Page	Ref.No
03069LM-B002	Lm Guide Block Set (9C)	21	C-1-1
03071SC-7113	Hex. Socket Bolt (M3*L10)	29	D-3-8
03071SC-7113	HEX. SOCKET BOLT (M3*L10)	60	H1-4-8
03071SC-7113	HEX. SOCKET BOLT (M3*L10)	68	H2-4-8
03071SC-7113	HEX. SOCKET BOLT (M3*L10)	68	H2-4-14
03071SC-A001	Hex.Scoket Bolt (M3*L15)	21	C-1-2
03071SC-A001	Hex.Scoket Bolt (M3*L15)	85	H4-4-8
03100100U000	ANGLE DISK (R)	39	E1-1-18
03100100UH01	Cam Roller Guide Rail (L590)	67	H2-3-1
03100100UH01	Cam Roller Guide Rail (L590)	75	H3-3-1
03100400UH01	Y-Driving Timing Belt	59	H1-3-3
03100400UH81	Y-Driving Timing Belt	67	H2-3-3
03100400UH81	Y-Driving Timing Belt	75	H3-3-3
03100500UH00	Y-Tension Adjusting Bracket	56	H1-1-31
03100500UH00	Y-Tension Adjusting Bracket	64	H2-1-31
03100500UH00	Y-Tension Adjusting Bracket	72	H3-1-31
03100500UH00	Y-Tension Adjusting Bracket	81	H4-1-31
03100500UH80	Y-Driving Motor Bracket	83	H4-2-5
03100600UH00	Tension Adjusting Plate	56	H1-1-20
03100600UH00	Tension Adjusting Plate	64	H2-1-20
03100600UH00	Tension Adjusting Plate	72	H3-1-20
03100600UH00	Tension Adjusting Plate	81	H4-1-20
03100600UH60	INDEX SHAFT A [428.5mm]	34	E-2-9
03100700UH00	Fixed Block	56	H1-1-24
03100700UH00	Fixed Block	64	H2-1-24
03100700UH00	Fixed Block	72	H3-1-24
03100700UH00	Fixed Block	81	H4-1-24
03100700UH80	MAIN DRIVING BELT 200J	35	E-3-18
03100700UH80	MAIN DRIVING BELT 200J	41	E1-3-18
03100710UH60	INDEX SHAFT B[551mm]	40	E1-2-9
03100800UH60	Y-Driving Shaft "A"	58	H1-2-11
03100800UH60	Y-Driving Shaft "C" UH1208D	66	H2-2-12
03100800UH60	Y-Driving Shaft "C" UH1208D	74	H3-2-12
03100800UH60	Y-Driving Shaft "C"	83	H4-2-14
03100900UH00	Y-Bearing Bracket (L)	57	H1-1-44
03100900UH00	Y-Bearing Bracket (L)	82	H4-1-44
03101000UH00	Y-Bearing Bracket (R)	57	H1-1-43
03101000UH00	Y-Bearing Bracket (R)	82	H4-1-43
03101100UH00	Y-Bearing Bracket Cover	57	H1-1-51
03101100UH00	Y-Bearing Bracket Cover	65	H2-1-51
03101100UH00	Y-Bearing Bracket Cover	73	H3-1-51
03101100UH00	Y-Bearing Bracket Cover	82	H4-1-51
03101300UH00	Sensor Bracket	56	H1-1-13
03101300UH00	Sensor Bracket	56	H1-1-14
03101300UH00	Bracket for Y-Sensor	64	H2-1-13
03101300UH00	Bracket for Y-Sensor	64	H2-1-14
03101300UH00	Bracket for Y-Sensor	72	H3-1-13
03101300UH00	Bracket for Y-Sensor	72	H3-1-14
03101300UH00	Sensor Bracket	81	H4-1-13
03101300UH00	Sensor Bracket	81	H4-1-14
03101300UH80	UPPER SHAFT SUPPORT BRACKET(L)	35	E-3-1
03101400U000	UPPER SHAFT SUPPORT COVER	35	E-3-9
03101400U000	UPPER SHAFT SUPPORT COVER	41	E1-3-9

R. Index

Part No.	Part Name	Page	Ref.No
03101400UH00	Plate For Y-Sensing	67	H2-3-8
03101400UH00	Plate For Y-Sensing	75	H3-3-8
03101400UH80	UPPER SHAFT SUPPORT BRACKET (R)	41	E1-3-1
03101500UH00	Bracket for X-Y Sub Connecting	59	H1-3-19
03101500UH00	Bracket for X-Y Sub Connecting	84	H4-3-19
03101700UH00	Roller Fixed Plate	78	H3-6-31
03101700UH00	Roller Fixed Plate	88	H4-6-36
03106000U000	Timing Pulley Driving Pin	60	H1-4-13
03106000U000	Timing Pulley Driving Pin	68	H2-4-13
03106000U000	Timing Pulley Driving Pin	85	H4-4-14
03200200B000	Lower Shaft Timing Pulley	66	H2-2-16
03200200B000	Lower Shaft Timing Pulley	74	H3-2-16
03200400I000	Roller Bearing	66	H2-2-24
03200400I000	Roller Bearing	74	H3-2-24
03200500UH00	X-Axis L/M Guide "A"	86	H4-5-1
03200600UH00	X-LM RAIL "B" (THK SR15W- L690)	77	H3-5-2
03200600UH00	X-Axis L/M "B"	86	H4-5-2
03200700I000	C-Ring	66	H2-2-26
03200700I000	C-Ring	74	H3-2-26
03200700UH00	Tubular Frame Rail Plate	78	H3-6-3
03200700UH00	Tubular Frame Rail Plate	87	H4-6-3
03200800UH00	L/M Block Connecting Plate (L)	86	H4-5-10
03200900UH00	L/M Block Connecting Plate (R)	86	H4-5-14
03200900UK40	L/M Block Connecting Plate (R)	69	H2-5-13
03201000UH00	L/M Block Connecting Plate	86	H4-5-15
03201100UH00	X Timing Belt (015-AT5-0299)	76	H3-4-5
03201100UH00	X-Timing Belt (L=1260)	85	H4-4-5
03201200UH00	X-MOVING SENSOR PLATE	77	H3-5-25
03201200UH00	X-Moving Sensor Plate	86	H4-5-21
03201300UH00	X-Cover (L=2931)	87	H4-6-4
03201600UH00	X-Positioning Sensor	70	H2-6-21
03201600UH00	X-POSITIONING SENSOR	79	H3-6-45
03201700UH00	X-Positioning Sensor	70	H2-6-24
03201800UH00	Felt (190*30*1.5T)	70	H2-6-2
03201900UH00	X-Frame Screw Bush	70	H2-6-25
03201900UH00	X-FRAME SCREW BUSH	78	H3-6-30
03201900UH00	X-Frame Screw Bush	88	H4-6-47
03300604U000	Take-Up Guide Rail L=329 (12C)	21	C-1-3
03301000B000	TAKE-UP LEVER PIN	15	B-2-15
03301200A000	Bushing	15	B-2-17
03301800U000	NEEDLE BAR DRIVE PIN	15	B-2-1
03302100A000	Pin Collar	15	B-2-13
03302900H000	NEEDLE CASE (KT-42469)	16	B-3-3
03303000H000	Connecting Rod	16	B-3-4
03303100H000	Bearing Case A @20	18	B-5-1
03303800I000	Arm Guard Plate(R)	22	C-2-5
03304100I000	Thread Holding Lever Ass'y	22	C-2-6
03304200I000	Lever Spring	22	C-2-7
03304300I000	Lever Spring Bush.	22	C-2-8
03304400I000	Thread Holding Push Plate	22	C-2-9
03304900H000	Jump Clutch Lever Stopper	23	C-3-23
03313200I000	NEEDLE BAR DRIVE LEVER(SET)	17	B-4-3
03410100I000	Jump Motor Base	23	C-3-3

Part No.	Part Name	Page	Ref.No
03410200H000	Jump Motor	23	C-3-1
03410300H000	Jump Crank Stopper	23	C-3-7
03410800I000	Jump Retrun Spring	23	C-3-13
03410900H000	Jump Driving Clutch	23	C-3-16
03411000H000	Jump Clutch Pin	23	C-3-18
03411100I000	Jump Clutch Base	23	C-3-19
03411200I000	Jump Driving Clutch Lever	23	C-3-26
03411300H000	Stud for Jump Clutch Lever	23	C-3-27
03411400H000	Stud for Jump Crank Stopper	23	C-3-8
03411810I000	Jump Crank Roller Ass'y	23	C-3-11
03500110H000	Upper Thread Catcher Base	92	I-2-1
03500110H000	Upper Thread Catcher Base	98	I1-2-1
03500210H000	Upper Thread Hook Base Cover	92	I-2-2
03500210H000	Upper Thread Hook Base Cover	98	I1-2-2
03500330H000	Upper Thread Hook	92	I-2-17
03500330H000	Upper Thread Hook	98	I1-2-17
03500500H000	Upper Catcher Driving Lever	92	I-2-4
03500500H000	Upper Catcher Driving Lever	98	I1-2-4
03500600H000	Driving Lever Pin	92	I-2-5
03500600H000	Driving Lever Pin	98	I1-2-5
03500700H000	Driving Lever Pin Collar	92	I-2-6
03500700H000	Driving Lever Pin Collar	98	I1-2-6
03500800H000	Driving Lever Pin Washer	92	I-2-8
03500800H000	Driving Lever Pin Washer	98	I1-2-8
03500900H000	Clutch Block	92	I-2-9
03500900H000	Clutch Block	98	I1-2-9
03501000H000	Clutch Stud Screw	92	I-2-10
03501000H000	Clutch Stud Screw	98	I1-2-10
03501100H000	Clutch Spring	92	I-2-11
03501100H000	Clutch Spring	98	I1-2-11
03501200H000	Clutch Dial	92	I-2-12
03501200H000	Clutch Dial	98	I1-2-12
03600100I000	Needle Bar Driving Shaft Driver	17	B-4-11
03600200I000	Needle Bar Reciprocator	17	B-4-7
03700100UH60	Mes Driving Shaft "A" L=818 UH1506D	27	D-1-17
03700300UH60	Mes Cam Driving Box C	40	E1-2-1
03704900A000	Cam Shaft Collar	28	D-2-9
03704900A000	CAM SHAFT COLLAR	34	E-2-10
03704900A000	CAM SHAFT COLLAR	40	E1-2-10
03707300A000	Solenoid Collar	12	A-2-20
038A0000B000	Take-Up Driving Lever A/B Assy	15	B-2-18
04000104UK00	SWITCH BASE HOLDER UH1204D	126	N-2-6
04000104UK00	SWITCH BASE HOLDER UH1206D	126	N-2-6
04000104UK00	SWITCH BASE HOLDER UH1208D	126	N-2-6
04000105UH00	S/B SWITCH BASE	126	N-2-1
04000204UK00	SWITCH BASE HOLDER UH906D	126	N-2-6
04000204UK00	SWITCH BASE HOLDER UH912D	126	N-2-6
04000205UH00	EMERGENCY SWITCH BASE	126	N-2-10
04001000 E000	Y-Drive Timing Pulley	65	H2-1-49
04001000 E000	Y-Drive Timing Pulley	73	H3-1-49
04001000 E000	Y-Drive Timing Pulley	81	H4-1-33
04001000U000	Y-Drive Timing Pulley	57	H1-1-49
04-003S-AU10	Warning Sticker	122	M-2-21

Part No.	Part Name	Page	Ref.No
04004AF-A001	Needle Plate Screw	30	D-4-33
04-004S-AU10	Warning Sticker	122	M-2-22
04006MC-9123	TRUSS SCREW(M4*L6) SUS	50	F-4-17
04007SC-A001	Cushion Cover Screw (M3*L2.3)	30	D-4-31
04010MC-7113	Hex.Scoket Bolt (M4*L10)	23	C-3-24
04010MC-7113	Hex.Socket Bolt (M4*L10)	27	D-1-13
04010MC-7113	Hex.Socket Bolt (M4*L10)	52	G-1-3
04012AF-A001	Hook Shaft Bush Screw	12	A-2-2
04012AF-A001	Hook Shaft Bush Screw	15	B-2-6
04012AF-A001	Hook Shaft Bush Screw	28	D-2-13
04012AF-A001	HOOK SHAFT BUSH SCREW (15/64)	34	E-2-3
04012AF-A001	HOOK SHAFT BUSH SCREW (15/64)	34	E-2-16
04012AF-A001	HOOK SHAFT BUSH SCREW (15/64)	40	E1-2-3
04012AF-A001	HOOK SHAFT BUSH SCREW (15/64)	40	E1-2-16
04012AF-A001	Hook Shaft Bush Screw	49	F-3-13
04012AF-A001	Screw(15/64-28)	66	H2-2-11
04012AF-A001	Screw(15/64-28)	74	H3-2-11
04013PR-B001	WASHER (3.2T-@10)	12	A-2-24
04014PR-B001	WASHER (2T-@10)	12	A-2-25
04014SC-4517	Hex. Socket Set Screw(M4*L5)	28	D-2-2
04014SC-4517	HEX.SOCKET SET SCREW(M5*L5)	37	E-5-10
04014SC-4517	HEX.SOCKET SET SCREW(M5*L5)	43	E1-5-10
04014SC-4517	Hex.Socket Set Screw(M5*L5)	49	F-3-6
04014SC-4517	Hex.Socket Set Screw(M5*L5)	57	H1-1-50
04014SC-4517	Hex.Socket Set Screw(M5*L5)	60	H1-4-27
04014SC-4517	Hex.Socket Set Screw(M5*L5)	65	H2-1-50
04014SC-4517	Hex.Socket Set Screw(M5*L5)	68	H2-4-26
04014SC-4517	Hex.Socket Set Screw(M5*L5)	73	H3-1-50
04014SC-4517	HEX.SOCKET SET SCREW(M5*L5)	76	H3-4-28
04014SC-4517	Hex.Socket Set Screw(M5*L5)	82	H4-1-50
04014SC-4517	Hex.Socket Set Screw(M5*L5)	85	H4-4-28
04014SC-4517	Hex.Socket Set Screw(M5*L5)	90	I-1-9
04014SC-4517	Hex.Socket Set Screw(M5*L5)	90	I-1-11
04014SC-4517	Hex.Socket Set Screw(M5*L5)	92	I-2-7
04014SC-4517	Hex.Socket Set Screw(M5*L5)	96	I1-1-9
04014SC-4517	Hex.Socket Set Screw(M5*L5)	96	I1-1-11
04014SC-4517	Hex.Socket Set Screw(M5*L5)	98	I1-2-7
04014SC-4517	HEX.SOCKET SET SCREW(M5*L5)	101	J-1-16
04016AF-A001	Cam Collar Screw	28	D-2-4
04016AF-A001	Cam Collar Screw	28	D-2-10
04016AF-A001	Cam Collar Screw	30	D-4-21
04016AF-A001	CAM COLLAR SCREW	34	E-2-6
04016AF-A001	CAM COLLAR SCREW	34	E-2-11
04016AF-A001	CAM COLLAR SCREW	40	E1-2-11
04016MC-4113	CAM ROLLER GUIDE FIXED SCREW	56	H1-1-2
04016MC-4113	CAM ROLLER GUIDE FIXED SCREW	59	H1-3-2
04016MC-4113	CAM ROLLER GUIDE FIXED SCREW	67	H2-3-2
04016MC-4113	CAM ROLLER GUIDE FIXED SCREW	75	H3-3-2
04016MC-4113	CAM ROLLER GUIDE FIXED SCREW	84	H4-3-2
04019CW-T121	Pin Stud Screw	15	B-2-10
04019GA-UK01	Hook Shaft Gear	12	A-2-3
04020AF-T121	Roller for Take-Up Lever B	15	B-2-11
04021BR-T121	Needle Bearing (KT367N IKO)	15	B-2-12

R. Index

Part No.	Part Name	Page	Ref.No
04023MC-4113	Hex. Socket Bolt (M4*L23)	45	F-1-5
04026BR-A001	Ball Bearing 6003Z	30	D-4-19
04026BR-A001	BALL BEARING 6003Z	34	E-2-4
04026BR-A001	BALL BEARING 6003Z	40	E1-2-4
04026SC-T121	Needle Plate Pin	30	D-4-24
04027BR-A001	Needle Bearing (Hmk1515)	28	D-2-7
04027BR-A001	NEEDLE BEARING (HMK1515)	34	E-2-14
04027BR-A001	NEEDLE BEARING (HMK1515)	40	E1-2-14
04028SC-UK01	STUD BOLT (M10*P1.25*L69)	12	A-2-23
04029SW-A001	Stud Bolt Washer(S) (@8)	19	B-6-4
04029SW-A001	Stud Bolt Washer(S) (@8)	25	C-5-4
04029SW-A001	Stud Bolt Washer(S) (@8)	28	D-2-16
04029SW-A001	Stud Bolt Washer(S) (@8)	31	D-5-9
04029SW-A001	STUD BOLT WASHER(S) (@8)	33	E-1-17
04029SW-A001	STUD BOLT WASHER(S) (@8)	36	E-4-8
04029SW-A001	STUD BOLT WASHER(S) (@8)	39	E1-1-17
04029SW-A001	STUD BOLT WASHER(S) (@8)	42	E1-4-8
04029SW-A001	Stud Bolt Washer(S) (@8)	58	H1-2-8
04029SW-A001	Stud Bolt Washer(S) (@8)	64	H2-1-5
04029SW-A001	Stud Bolt Washer(S) (@8)	66	H2-2-32
04029SW-A001	Stud Bolt Washer(S) (@8)	72	H3-1-5
04029SW-A001	Stud Bolt Washer(S) (@8)	74	H3-2-32
04029SW-A001	Stud Bolt Washer(S) (@8)	81	H4-1-5
04029SW-A001	Stud Bolt Washer(S) (@8)	83	H4-2-8
04029SW-A001	STUD BOLT WASHER(S) (@8)	134	P-2-13
04030SW-A001	Stud Bolt Washer(L) (@8)	28	D-2-15
04030SW-A001	Stud Bolt Washer(L) (@8)	31	D-5-10
04032SN-A001	Hex. Nut (M8-No2)	28	D-2-18
04032SN-A001	Hex. Nut (M8-No2)	31	D-5-7
04032SN-A001	Hex. Nut (M8-No2)	78	H3-6-33
04032SN-A001	Hex. Nut (M8-No2)	88	H4-6-46
04032SN-A001	HEX. NUT (M8-NO2)	90	I-1-27
04032SN-A001	Hex. Nut (M8-No2)	90	I-1-33
04032SN-A001	HEX. NUT (M8-NO2)	96	I1-1-27
04032SN-A001	Hex. Nut (M8-No2)	96	I1-1-33
04032SN-UK01	HEX. NUT (M10*P1.25)	12	A-2-27
04033AF-D002	Rotary Hook Set	94	I-4-1
04034AF-A001	Bobbin Case Set	94	I-4-2
04035AF-A001	Bobbin	94	I-4-3
04037SC-A001	Picker Bracket Screw(R)	30	D-4-27
04039PR-A001	BEARING COVER	34	E-2-7
04039PR-A001	BEARING COVER	40	E1-2-7
04053PR-UK01	Rail Support Plate	31	D-5-4
04500100U000	Y-Drive Timing Pulley	56	H1-1-33
05000003U000	Color Change Roller Base Assy (9C)	49	F-3-25
05000004U000	Color Change Roller Base Assy (12C)	49	F-3-25
05000005U000	Color Change Roller Base Assy (15C)	49	F-3-25
05000100H000	Encoder Base	24	C-4-5
05000110UH80	Y-MOTOR COUPLING COVER L	110	K-6-32
05000120UH80	Y-MOTOR COUPLING COVER R	110	K-6-31
05000200NH60	FIXED TABLE "B"	110	K-6-6
05000700NH60	FIXED TABLE "G"	110	K-6-11
05001300U000	TABLE SUPPORT L=263	105	K-2-24

Part No.	Part Name	Page	Ref.No
05001400UH60	THREAD CUTTING BOX COVER B	106	K-3-9
05001400UH60	THREAD CUTTING BOX COVER B	107	K-4-14
05001400UH60	THREAD CUTTING BOX COVER B	108	K-5-14
05001400UH60	THREAD CUTTING BOX COVER B	110	K-6-17
05001400UH80	TABLE SUPPORT ANGLE B L399	133	P-1-18
05001500UK40	ANGLE SUPPORT	105	K-2-10
05001700U000	TABLE SUPPORT PLATE	105	K-2-9
05001800UH60	COUPLING COVER A	110	K-6-29
05002000UH60	MOVING TABLE FIXED PLATE A	104	K-1-1
05002400UH60	OP Holder Support Cover (A)	106	K-3-21
05002400UH60	OP Holder Support Cover (A)	107	K-4-16
05002400UH60	OP Holder Support Cover (A)	109	K-5-31
05002500UH60	OP Holder Support Cover (B)	107	K-4-17
05002500UH60	OP Holder Support Cover (B)	109	K-5-32
05-002S-SW70	PCB Guide (TRCG-3300)	120	M-1-6
05007SC-7113	Hex.Scoket Bolt (M3*L5)	22	C-2-12
05007SC-7113	HEX. SOCKET BOLT (M3*L5)	35	E-3-10
05007SC-7113	HEX. SOCKET BOLT (M3*L5)	41	E1-3-10
05008AF-4113	XY Driver Board Screw(set) (M4xL16)	120	M-1-5
05008MC-4517	Hex.Socket Bolt(M5*L8)	90	I-1-7
05008MC-4517	Hex.Socket Bolt(M5*L8)	96	I1-1-7
05008MC-9123	TRUSS SCREW(M5*L8) SUS	24	C-4-11
05008SC-4113	Hex.Socket Bolt (M4*L16)	45	F-1-2
05008SC-4113	Hex.Socket Bolt (M4*L16)	49	F-3-2
05008SC-4113	Hex.Socket Bolt (M4*L16)	50	F-4-2
05008SC-4113	Hex.Socket Bolt (M4*L16)	90	I-1-35
05008SC-4113	Hex.Socket Bolt (M4*L16)	96	I1-1-35
05008SC-4113	Hex.Socket Bolt (M4*L16)	140	Q2-1-4
05008SC-4113	Hex.Socket Bolt (M4*L16)	142	Q2-3-4
05009SW-1111	Washer (@4-L)	50	F-4-4
05009SW-1111	Washer (@4-L)	56	H1-1-17
05009SW-1111	Washer (@4-L)	59	H1-3-7
05009SW-1111	Washer (@4-L)	64	H2-1-17
05009SW-1111	Washer (@4-L)	70	H2-6-11
05009SW-1111	Washer (@4-L)	72	H3-1-17
05009SW-1111	WASHER (@4-L)	76	H3-4-4
05009SW-1111	WASHER (@4-L)	77	H3-5-32
05009SW-1111	Washer (@4-L)	81	H4-1-17
05009SW-1111	Washer (@4-L)	84	H4-3-7
05009SW-1111	Washer (@4-L)	85	H4-4-4
05009SW-1111	Washer (@4-L)	86	H4-5-13
05009SW-1111	Washer (@4-L)	86	H4-5-19
05009SW-1111	Washer (@4-L)	86	H4-5-24
05009SW-1111	Washer (@4-L)	87	H4-6-11
05009SW-1111	Washer (@4-L)	105	K-2-22
05009SW-1111	WASHER (@4-L)	127	N-3-17
05009SW-1111	Washer (@4-L)	136	Q1-1-5
05009SW-1111	Washer (@4-L)	144	Q3-1-5
05009SW-1111	Washer (@4-L)	148	Q4-1-5
05010400U000	TABLE SUPPORTER (B2) L=402	105	K-2-14
05010400U000	TABLE SUPPORTER (B2) L=402	105	K-2-15
05012MC-7113	Cap Frame Fixed Screw	142	Q2-3-2
05015CW-A001	Head Base Pin(@5*L15)	45	F-1-6

Part No.	Part Name	Page	Ref.No
05016SN-1211	Hex.Nut (M4)	12	A-2-11
05016SN-1211	Nut (@4)	53	G-2-9
05018CW-A001	Needle Bar	45	F-1-8
05019SC-A001	Needle Bar Cover Screw (M5*L6)	45	F-1-9
05021PM-H001	Presser Foot Spring Guide	45	F-1-17
05022SW-A001	Spring Shoe Washer	45	F-1-24
05023RB-A001	Needle Bar Cushion Rubber "A"	45	F-1-11
05024RB-A001	Needle Bar Cushion Rubber "B"	45	F-1-12
05026SC-4113	Stopper Screw (9/64-11.5)	45	F-1-14
05026SC-H001	Presser Foot Bolt	45	F-1-21
05027PR-H001	PRESSER FOOT HOLDER WASHER	45	F-1-22
05028SC-4113	Holder Screw (9/64-L8)	45	F-1-16
05029SW-A01	Washer (@8)	123	M-3-5
05031AF-A001	PRESSER FOOT GUIDE BUSH	46	F-1-29
05037DB-A001	Needle (Db-K5- #11)	46	F-1-28
05041SC-A001	Guide Rail Serew	21	C-1-4
05041SC-A001	Bolt (9/64 n=40)	47	F-2-16
05062SC-A001	Thread Guide (M) Screw (9/64 n=40)	47	F-2-8
05070SC-3123	Head Face Plate (U) Screw	47	F-2-3
05070SC-3123	Head Face Plate (U) Screw	47	F-2-12
05070SC-3123	Truss Bolt 9/64 n=40	47	F-2-14
05100100T000	X-Motor (103H7126-2851)	60	H1-4-16
05100105UH60	SPOOL PLATE L=1280 UH1506D	101	J-1-1
05200105UH00	THREAD ANGLE "A" L=2420 UH1512D	102	J-1-2
05200105UH60	THREAD ANGLE "A" L=1220 UH1506D	102	J-1-2
05200205UH00	THREAD ANGLE "B" L=2420 UH1512D	102	J-1-3
05200205UH60	THREAD ANGLE "B" L=1220 UH1506D	102	J-1-3
05200305UH00	THREAD ANGLE "C" L=2420 UH1512D	102	J-1-4
05200305UH60	THREAD ANGLE "C" L=1220 UH1506D	102	J-1-4
05200405UH60	THREAD ANGLE "D" L=1220 UH1506D	102	J-1-5
05200415UH00	THREAD ANGLE "D" L=2420 UH1512D	102	J-1-5
05363SC-A001	Needle Fixed Screw (A/S)	46	F-1-27
05452CM-A001	Eyelet "A"	47	F-2-6
05452CM-A001	Eyelet "A"	52	G-1-15
05452CM-A001	Thread Guide Bushing	130	O-1-12
05483CM-A001	Eyelet "B" (9C)	47	F-2-7
05483CM-A001	Eyelet "B"	47	F-2-7
06000105UH60	UPPER THREAD DRIVING SHAFT A UH1512D	47	F-2-20
06000114UH60	Head Transportation Shaft UH1506D	47	F-2-20
06003SW-2111	Washer (@4)	16	B-3-7
06003SW-2111	Washer (@4)	16	B-3-8
06003SW-2111	Washer (@4)	23	C-3-6
06003SW-2111	Washer (@4)	45	F-1-3
06003SW-2111	WASHER (@4)	102	J-1-8
06010AF-8118	PLUS SCREW(M3*L4)	79	H3-6-46
06010AF-8118	Plus Screw(M3*L4)	87	H4-6-19
06010SC-8118	Plus Screw (M3*L4)	56	H1-1-19
06010SC-8118	Plus Screw(M3*L4)	61	H1-5-22
06010SC-8118	Plus Screw (M3*L4)	81	H4-1-19
06010SC-8118	Plus Screw (M3*L4)	93	I-3-8
06010SC-8118	Plus Screw (M3*L4)	99	I1-3-8
06011SW-2111	Washer (@3)	22	C-2-13
06011SW-2111	Washer (@3)	23	C-3-15

R. Index

Part No.	Part Name	Page	Ref.No
06011SW-2111	Washer (@3)	23	C-3-22
06011SW-2111	Washer (@3)	23	C-3-25
06011SW-2111	Washer (@3)	24	C-4-4
06011SW-2111	WASHER (@3)	78	H3-6-29
06011SW-2111	WASHER (@3)	87	H4-6-31
06011SW-2111	Washer (@3)	140	Q2-1-11
06020MC-8119	PLUSS SCREW (M6*L20)	31	D-5-5
06025MC-7113	Hex.Socket Bolt(M6*L25)	90	I-1-3
06025MC-7113	Hex.Socket Bolt(M6*L25)	96	I1-1-3
07-004S-SM5S	Main Drive (ASSY) Screw (set) (M4xL10)	120	M-1-2
07-004S-SM5S	Driver Radiator Screw(set) (M4xL10)	120	M-1-7
07-004S-SM5S	Back plane Board Screw (Set) (M4xL10)	122	M-2-3
07-004S-SM5S	Connector PCB Cover Screw (set) (M4xL10)	122	M-2-5
07-004S-SM5S	Earth Plate Screw (M4xL10)	122	M-2-13
07-004S-SM5S	Haness Cover Screw(set)	122	M-2-16
07005BM-B002	Take-Up Lever Set	47	F-2-21
07-005S-SM5S	DDC Radiator Screw(set) (M3xL7)	120	M-1-18
07-005S-SM5S	SMPS Radiator Screw(set) (M3xL10)	120	M-1-31
07-005S-SM5S	SMPS Fixture Screw(set)	120	M-1-32
07006LA-UK01	Mes Connecting Link	30	D-4-7
07009SC-4517	Hex. Socket Bolt(M5*L6)	46	F-1-30
07015PR-UK01	Solenoid Plate	29	D-3-1
07016SC-4113	HEX. SOCKET BOLT (M4*L12)	78	H3-6-22
07016SC-7113	Hex.Socket Bolt(M4*L12)	15	B-2-9
07016SC-7113	Hex.Scoket Bolt (M4*L10)	23	C-3-4
07016SC-7113	Hex.Socket Bolt (M4*L12)	56	H1-1-21
07016SC-7113	Hex.Socket Bolt (M4*L12)	59	H1-3-5
07016SC-7113	Hex.Socket Bolt (M4*L12)	64	H2-1-21
07016SC-7113	Hex.Socket Bolt (M4*L12)	67	H2-3-5
07016SC-7113	Hex.Socket Bolt (M4*L12)	72	H3-1-21
07016SC-7113	Hex.Socket Bolt (M4*L12)	75	H3-3-5
07016SC-7113	HEX.SOCKET BOLT (M4*L12)	79	H3-6-39
07016SC-7113	Hex.Socket Bolt (M4*L12)	81	H4-1-21
07016SC-7113	Hex.Socket Bolt (M4*L12)	84	H4-3-5
07017CL-UK01	Solenoid Crank	29	D-3-7
07018SC-8118	Plus Screw (M3*L8)	30	D-4-12
07018SC-8118	Plus Screw (M3*L8)	93	I-3-4
07018SC-8118	Plus Screw (M3*L8)	94	I-4-14
07018SC-8118	Plus Screw (M3*L8)	99	I1-3-4
07021MP-T121	Lever Shaft Bush	30	D-4-1
07023CW-T121	Lever Pin "A"	30	D-4-2
07024BR-UK01	Fiber Washer(R-Tw0815)	27	D-1-5
07025CW-UK01	Lever Shaft (@8*L70)	27	D-1-4
07026AD-A002	Take-Up Guide Rail L=250 (9C)	21	C-1-3
07026CW-UK01	Roller Shaft	27	D-1-10
07028CL-UK01	Mes Driving Lever	27	D-1-6
07028PR-T121	Moving Mes	30	D-4-9
07029CL-UK01	Mes Driving Crank	27	D-1-7
07030AF-UK01	Roller	27	D-1-9
07032CL-T121	Fixed Mes	30	D-4-10
07033PR-T121	Under Thread Presser	30	D-4-11
07034CM-UK01	Mes Cam	28	D-2-3
07035SC-7113	Hex.Scoket Bolt (M3*L6)	22	C-2-10

Part No.	Part Name	Page	Ref.No
07035SC-7113	Bracket Screw (M3*L6)	24	C-4-2
07035SC-7113	Bracket Screw (M3*L6)	57	H1-1-52
07035SC-7113	Bracket Screw (M3*L6)	65	H2-1-52
07035SC-7113	Bracket Screw (M3*L6)	73	H3-1-52
07035SC-7113	Bracket Screw (M3*L6)	82	H4-1-52
07035SC-7113	Bracket Screw (M3*L6)	90	I-1-13
07035SC-7113	Bracket Screw (M3*L6)	96	I1-1-13
07038CW-UK01	Mes Cam Shaft	28	D-2-8
07041GA-UK01	Gear "A"	28	D-2-11
07043GA-UK01	Gear "B"	28	D-2-12
08000100UH60	Movable Table	107	K-4-5
08000205UH61	Model Mark	133	P-1-25
08000803I000	Tension Plate Cover	54	G-3-4
08002603H000	Cover Plate A	54	G-3-1
08-002M-SW67	SMPS Fixing Stud (3-5-10)	120	M-1-28
08004700A000	Color Change Bracket "A"	128	N-4-2
08004900A000	Color Change Bracket "B"	47	F-2-19
08006SC-8118	Plus Screw (M3*L5)	23	C-3-14
08006SC-8118	Plus Screw (M3*L5)	49	F-3-18
08006SC-8118	Plus Screw (M3*L5)	64	H2-1-19
08006SC-8118	Plus Screw (M3*L5)	72	H3-1-19
08007SC-4517	Hex. Socket Set Screw (M3*L5)	56	H1-1-32
08007SC-4517	Hex. Socket Set Screw (M3*L5)	64	H2-1-32
08007SC-4517	Hex. Socket Set Screw (M3*L5)	72	H3-1-32
08007SC-4517	Hex. Socket Set Screw (M3*L5)	81	H4-1-32
08011SC-8118	Screw (M2*L4)	53	G-2-4
08011SW-1111	Spring Washer (@3-S)	24	C-4-3
08011SW-1111	Spring Washer (@3-S)	57	H1-1-54
08011SW-1111	Spring Washer (@3-S)	59	H1-3-11
08011SW-1111	Spring Washer (@3-S)	60	H1-4-10
08011SW-1111	Spring Washer (@3-S)	61	H1-5-6
08011SW-1111	Spring Washer (@3-S)	65	H2-1-54
08011SW-1111	Spring Washer (@3-S)	67	H2-3-11
08011SW-1111	Spring Washer (@3-S)	73	H3-1-54
08011SW-1111	Spring Washer (@3-S)	75	H3-3-11
08011SW-1111	SPRING WASHER (@3-S)	76	H3-4-10
08011SW-1111	Spring Washer (@3-S)	82	H4-1-54
08011SW-1111	Spring Washer (@3-S)	84	H4-3-11
08011SW-1111	Spring Washer (@3-S)	85	H4-4-10
08012CW-T121	Connecting Plate Stud Screw	94	I-4-24
08014AF-A001	Plus Screw (M3*L8)	94	I-4-11
08014SC-A001	Plus Screw (M3*L8)	30	D-4-14
08016CW-UK01	Link Stud Bolt	27	D-1-14
08019CW-UK01	Clamp Stud Bolt	27	D-1-18
08021PM-UK01	Lever Stopper	27	D-1-21
08022RB-T121	O-Ring (@10)	27	D-1-8
08023CL-UK01	Mes Shaft Cramp	27	D-1-15
08023CS-UK01	Mes Cam Driving Box	34	E-2-1
08023CW-A001	Mes Shaft Cramp	27	D-1-19
08025CW-UK01	Box Stud Bolt	28	D-2-14
08025MC-7113	HEX. SOCKET BOLT (M8*L25)	123	M-3-3
08027BR-A001	Thrust Bearing (Ntb 1528)	28	D-2-6
08027BR-A001	THRUST BEARING (NTB 1528)	34	E-2-12

Part No.	Part Name	Page	Ref.No
08027BR-A001	THRUST BEARING (NTB 1528)	40	E1-2-12
08028BR-A001	Thrust Washer (As 1528)	28	D-2-5
08028BR-A001	THRUST WASHER (AS 1528)	34	E-2-13
08028BR-A001	THRUST WASHER (AS 1528)	40	E1-2-13
08034CW-UK01	Lever Connecting Pin	27	D-1-12
08037AF-4517	HEX. SOCKET SET SCREW M6*L10	123	M-3-7
08041SW-1111	Washer (@6)	64	H2-1-9
08041SW-1111	Washer (@6)	72	H3-1-9
08041SW-1111	WASHER (@8-S)	134	P-2-9
08042MP-UK01	Mes Cam Shaft Bush	28	D-2-1
08044SR-4013	E-Ring (@8)	60	H1-4-15
08044SR-4013	E-Ring (@8)	68	H2-4-15
08044SR-4013	E-RING (@8)	76	H3-4-16
08044SR-4013	E-Ring (@8)	85	H4-4-16
08048AF-T121	Solenoid Crank Roller	29	D-3-9
08050SN-T121	Hex. Nut	29	D-3-11
08053PR-A001	LEVER WASHER	34	E-2-19
08053PR-A001	LEVER WASHER	40	E1-2-19
08057SW-1111	WASHER (@6)	33	E-1-4
08057SW-1111	WASHER (@6)	35	E-3-7
08057SW-1111	WASHER (@6)	36	E-4-4
08057SW-1111	WASHER (@6)	37	E-5-8
08057SW-1111	Washer (@6)	37	E-5-17
08057SW-1111	WASHER (@6)	39	E1-1-4
08057SW-1111	WASHER (@6)	41	E1-3-7
08057SW-1111	WASHER (@6)	42	E1-4-4
08057SW-1111	WASHER (@6)	43	E1-5-8
08057SW-1111	Washer (@6)	43	E1-5-17
08057SW-1111	Washer (@6)	56	H1-1-9
08057SW-1111	Washer (@6)	66	H2-2-4
08057SW-1111	Washer	66	H2-2-8
08057SW-1111	Washer (@6)	74	H3-2-4
08057SW-1111	Washer	74	H3-2-8
08057SW-1111	Washer (@6)	81	H4-1-9
08057SW-1111	Washer (@6)	83	H4-2-4
08057SW-1111	Washer (@6)	90	I-1-5
08057SW-1111	Washer (@6)	96	I1-1-5
08057SW-1111	Washer (@6)	125	N-1-8
08057SW-1111	WASHER (@6)	126	N-2-9
08057SW-1111	Washer (@4)	126	N-2-19
08058SN-1311	Hex. Nut (M6-No3)	37	E-5-18
08058SN-1311	Hex. Nut (M6-No3)	43	E1-5-18
08062SC-4113	HEX. SOCKET BOLT (M5*L20)	104	K-1-8
08062SC-7113	HEX. SOCKET BOLT (M5*L20)	37	E-5-12
08062SC-7113	HEX. SOCKET BOLT (M5*L20)	43	E1-5-12
08062SC-7113	Hex. Socket Bolt (M5*L20)	56	H1-1-37
08062SC-7113	Hex.Socket Bolt (M5*L20)	58	H1-2-2
08062SC-7113	Hex. Socket Bolt (M5*L20)	64	H2-1-37
08062SC-7113	Hex. Socket Bolt (M5*L20)	72	H3-1-37
08062SC-7113	Hex. Socket Bolt (M5*L20)	81	H4-1-37
08068EL-UH36	T/T SOLENOID (DUAL)	29	D-3-5
08070PR-UK01	Sensor Bracket	29	D-3-13
08071RB-UK01	Thread Driver Box Rubber	27	D-1-24

R. Index

Part No.	Part Name	Page	Ref.No
08076SC-4113	HEX. SOCKET BOLT (M5*L12)	76	H3-4-18
08076SC-4113	HEX. SOCKET BOLT (M5*L12)	76	H3-4-31
08076SC-4113	HEX. SOCKET BOLT (M5*L12)	105	K-2-11
08076SC-4113	HEX. SOCKET BOLT (M5*L12)	105	K-2-16
08076SC-7113	Hex. Socket Bolt (M5*L12)	24	C-4-6
08076SC-7113	Hex. Socket Bolt (M5*L12)	60	H1-4-17
08076SC-7113	Hex. Socket Bolt (M5*L12)	60	H1-4-30
08076SC-7113	Hex. Socket Bolt (M5*L15)	64	H2-1-10
08076SC-7113	Hex. Socket Bolt (M5*L12)	68	H2-4-17
08076SC-7113	Hex. Socket Bolt (M5*L15)	72	H3-1-10
08076SC-7113	Hex. Socket Bolt (M5*L12)	85	H4-4-18
08076SC-7113	Hex. Socket Bolt (M5*L12)	113	L-1-2
08076SC-7113	Hex. Socket Bolt(M5*L12)	113	L-1-6
08087SC-7113	Hex. Socket Bolt (M8*L25)	25	C-5-2
08091SC-7113	HEX. SOCKET BOLT (M6*L20)	33	E-1-2
08091SC-7113	HEX. SOCKET BOLT (M6*L20)	35	E-3-5
08091SC-7113	Hex. Socket Bolt (M6*L20)	35	E-3-22
08091SC-7113	HEX. SOCKET BOLT (M6*L20)	36	E-4-2
08091SC-7113	HEX. SOCKET BOLT (M6*L20)	39	E1-1-2
08091SC-7113	HEX. SOCKET BOLT (M6*L20)	41	E1-3-5
08091SC-7113	Hex. Socket Bolt (M6*L20)	41	E1-3-22
08091SC-7113	HEX. SOCKET BOLT (M6*L20)	42	E1-4-2
08091SC-7113	Hex. Socket Bolt (M6*L20)	57	H1-1-45
08091SC-7113	Hex. Socket Bolt (M6*L20)	58	H1-2-10
08091SC-7113	Hex. Socket Bolt (M6*L20)	66	H2-2-15
08091SC-7113	Hex. Socket Bolt (M6*L20)	74	H3-2-15
08091SC-7113	Hex. Socket Bolt (M6*L20)	82	H4-1-45
08091SC-7113	Hex. Socket Bolt (M6*L20)	83	H4-2-10
08091SC-7113	Hex. Socket Bolt (M6*L20)	125	N-1-6
08100100UH60	Tubular Frame L2404	148	Q4-1-1
08101SC-8329	TAPPING SCREW (M3*L16)	106	K-3-12
08101SC-8329	TAPPING SCREW (M3*L16)	106	K-3-14
08101SC-8329	TAPPING SCREW (M3*L16)	106	K-3-16
08101SC-8329	TAPPING SCREW (M3*L16)	106	K-3-18
08101SC-8329	TAPPING SCREW (M3*L16)	106	K-3-20
08101SC-8329	TAPPING SCREW (M3*L16)	106	K-3-23
08101SC-8329	TAPPING SCREW (M3*L16)	107	K-4-7
08101SC-8329	TAPPING SCREW (M3*L16)	108	K-5-17
08101SC-8329	TAPPING SCREW (M3*L16)	108	K-5-19
08101SC-8329	TAPPING SCREW (M3*L16)	108	K-5-21
08101SC-8329	TAPPING SCREW (M3*L16)	108	K-5-23
08101SC-8329	TAPPING SCREW (M3*L16)	108	K-5-26
08101SC-8329	TAPPING SCREW (M3*L16)	108	K-5-28
08101SC-8329	TAPPING SCREW (M3*L16)	108	K-5-30
08101SC-8329	TAPPING SCREW (M3*L16)	109	K-5-33
08101SC-8329	TAPPING SCREW (M3*L16)	110	K-6-20
08101SC-8329	TAPPING SCREW (M3*L16)	110	K-6-22
08101SC-8329	TAPPING SCREW (M3*L16)	110	K-6-24
08101SC-8329	TAPPING SCREW (M3*L16)	110	K-6-26
08101SC-8329	TAPPING SCREW (M3*L16)	110	K-6-28
08101SC-8329	TAPPING SCREW (M3*L16)	110	K-6-33
08102300B000	Half Turn Sensor (Gp1S51V)	49	F-3-17
08102300B000	Half Turn Sensor (Gp1S51V)	61	H1-5-21

Part No.	Part Name	Page	Ref.No
08102EL-A001	Zero Point Sensor Ass'Y	29	D-3-12
08113SC-A001	Collar Screw	12	A-2-5
08113SC-A001	COLLAR SCREW 11/64,N=40,L6	16	B-3-15
08113SC-A001	Collar Screw	49	F-3-8
08113SC-A001	Collar Screw	49	F-3-16
08113SC-A001	Collar Screw	50	F-4-8
08122CW-A001	MES PIN	30	D-4-15
08122CW-UK01	Lever Pin "B"	31	D-5-11
08123CW-T121	MOVING MES CONNECTING LINK PIN	30	D-4-16
08200002I000	Head Assy 6c	46	F-1-32
08200003I000	Head Assy 9c	46	F-1-32
08200004I000	Head Assy 12c	46	F-1-32
08200100UH00	Tubular Frame (320*435)	141	Q2-2-2
08200100UH00	Tubular (Inner) 45*44	145	Q3-2-1
08200100UH00	Tubular (Inner)	149	Q4-2-1
08200200UH00	Tubular Frame (320*435)	141	Q2-2-1
08200200UH00	Tubular (Outer) 45*44	145	Q3-2-5
08200200UH00	Tubular (Outer)	149	Q4-2-5
08200300UH00	Tubular Frame Holder (L)	141	Q2-2-11
08200300UH00	Tubular Frame Holder (L)	149	Q4-2-10
08200400UH00	Tubular Frame Holder (R)	141	Q2-2-13
08200400UH00	Tubular Frame Holder (R)	149	Q4-2-12
08200500I000	PRESSER FOOT	45	F-1-19
08200503A000	Take-Up Lever Shaft (9C)	47	F-2-17
08200700H000	Needle Bar Felt	45	F-1-10
08200800A000	Take-Up Lever Shaft Bush(R)	47	F-2-23
08200900I000	Presser Foot Holder A'ssy	45	F-1-20
08201000I000	Needle Bar Return Spring	45	F-1-18
08201200H000	Presser Foot Cushion Rubber A	45	F-1-25
08201303I000	Head Rail 9C	45	F-1-4
08201400H000	Needle Bar Holder	45	F-1-15
08201600H000	NEEDLE FIXED HOLDER	46	F-1-26
08202000A000	Tension Plate Holder (9C)	52	G-1-16
08202000I000	Tension Plate Holder (12C)	52	G-1-16
08203000A000	Take-Up Lever Shaft Bush(L)	27	D-1-2
08203000A000	Take-Up Lever Shaft Bush(L)	47	F-2-22
08300100UH00	Square Frame "A" L=2544	150	Q4-3-1
08300103I000	Tension Unit	52	G-1-2
08300200UH00	Square Frame "B" L=2544	150	Q4-3-2
08300203I000	Board Base	53	G-2-10
08300300UH00	Connecting Plate "E"	146	Q3-3-4
08300300UH00	Connect Plate (E)	150	Q4-3-6
08300303I000	Insert Bush. Connecting Plate "A"	54	G-3-5
08300400A000	Lamp Cover	53	G-2-17
08300403I000	Insert Bush. Connecting Plate "B"	54	G-3-6
08300703I000	Roller Base Ass'y	53	G-2-2
08300800B000	Thread Breakage Wheel	53	G-2-3
08308300B000	Thread Detecting Wheel Stud "B"	53	G-2-5
08310000B000	Tension Adjusting Set	52	G-1-14
08320000I000	Sub Tension Adjusting Set	52	G-1-5
08500000I000	Upper Thread Catcher Assy	92	I-2-19
08500000I000	Upper Thread Catcher Assy	98	I1-2-19
08600003B000	Upper Thread Presser Base Assy 9C	93	I-3-11

Part No.	Part Name	Page	Ref.No
08600004B000	Upper Thread Presser Base Assy 12C	93	I-3-11
08600005B000	Upper Thread Presser Base Assy 15C	93	I-3-11
09000100U000	Tubular Frame Fixing Screw	136	Q1-1-20
09000100U000	Tubular Frame Fixing Screw	138	Q1-3-18
09000100U000	Tubular Frame Fixing Screw	140	Q2-1-12
09000100U000	Tubular Frame Fixing Screw	144	Q3-1-10
09000100U000	Tubular Frame Fixing Screw	148	Q4-1-10
09000100U000	Tubular Frame Fixing Screw	150	Q4-3-16
09000103UH00	Top Shaft Cover "A-4" (9C)	128	N-4-13
09000104UH00	Top Shaft Cover "A-4" (12C)	128	N-4-13
09000105UH00	Top Shaft Cover "A-4" (15C)	128	N-4-13
09000200H000	TOP SHAFT COVER BRACKET (L)	128	N-4-1
09000203UH00	Top Shaft Cover "A-3" (9C)	128	N-4-12
09000203UH60	Top Shaft Cover "A-2" (9C)	128	N-4-11
09000204UH00	Top Shaft Cover "A-3" (12C)	128	N-4-12
09000204UH60	Top Shaft Cover "A-2" (12C)	128	N-4-11
09000205UH00	Top Shaft Cover "A-3" (15C)	128	N-4-12
09000205UH60	Top Shaft Cover "A-2" (15C)	128	N-4-11
09000303UH00	Top Shaft Cover "A-1" (9C)	128	N-4-10
09000304UH00	Top Shaft Cover "A-1"(12C)	128	N-4-10
09000305UH00	Top Shaft Cover "A-1"	128	N-4-10
09000415UH00	SURFACE COVER L287	127	N-3-14
09000600UH60	M/C STARTING BRACKET	115	L-2-6
09000700U000	BALLAST	125	N-1-19
09005SC-3123	Truss Screw (M3*L6)	17	B-4-14
09005SC-3123	Truss Bolt (M3*L5)	47	F-2-11
09005SC-3123	Truss Screw (M3*L6)	52	G-1-9
09005SC-3123	Truss Screw (M3*L6)	52	G-1-12
09005SC-3123	Truss Screw (M3*L6)	53	G-2-16
09005SC-3123	Truss Screw (M3*L6)	54	G-3-7
09005SC-3123	TRUSS SCREW (M3*L6)	127	N-3-19
09-012S-CE53	Earth Sticker	122	M-2-25
09018EL-UK01	Sensor	64	H2-1-18
09018EL-UK01	Sensor	72	H3-1-18
09-023C-SC53	QC Passed Sticker	122	M-2-20
09026PR-AB00	Upper Thread Presser Base 12C	93	I-3-1
09026PR-AB00	Upper Thread Presser Base 12C	99	I1-3-1
09027ET-AB00	Velcro (12C)	93	I-3-2
09027ET-AB00	Velcro (12C)	99	I1-3-2
09027ET-T151	Velcro (15C)	93	I-3-2
09027ET-T151	Velcro (15C)	99	I1-3-2
09029PR-AB00	Presser Base Cover (12C)	93	I-3-3
09029PR-AB00	Presser Base Cover (12C)	99	I1-3-3
09029PR-T151	Presser Base Cover (15C)	93	I-3-3
09029PR-T151	Presser Base Cover (15C)	99	I1-3-3
09030PR-A002	Upper Thread Presser Base 9C	93	I-3-1
09030PR-A002	Upper Thread Presser Base 9C	99	I1-3-1
09031ET-A002	Velcro (9C)	93	I-3-2
09031ET-A002	Velcro (9C)	99	I1-3-2
09033PR-A002	Presser Base Cover (9C)	93	I-3-3
09033PR-A002	Presser Base Cover (9C)	99	I1-3-3
09038CW-A001	Thread Presser Space	93	I-3-5
09038CW-A001	Thread Presser Space	99	I1-3-5

R. Index

Part No.	Part Name	Page	Ref.No
09040PR-A001	Bracket (L)	93	I-3-6
09040PR-A001	Bracket (L)	99	I1-3-6
09041PR-A001	Bracket (R)	93	I-3-7
09041PR-A001	Bracket (R)	99	I1-3-7
09-041S-3701	FAN Nut (M4)	120	M-1-35
09044PR-A001	Upper Thread Holder Disk Set	93	I-3-10
09044PR-A001	Upper Thread Holder Disk Set	99	I1-3-10
09052PR-T151	Upper Thread Presser Base 15C	93	I-3-1
09052PR-T151	Upper Thread Presser Base 15C	99	I1-3-1
09100000U000	Attachment (R)	136	Q1-1-21
09100000U000	Attachment (R)	144	Q3-1-17
09100000U000	Attachment (R)	148	Q4-1-20
09100100U000	Attachment (R)	136	Q1-1-10
09100100U000	Attachment (R)	144	Q3-1-15
09100100U000	Attachment (R)	148	Q4-1-11
09100200U000	Fixed Clip Bracket Screw	136	Q1-1-14
09100200U000	Fixed Clip Bracket Screw	144	Q3-1-13
09100200U000	Fixed Clip Bracket Screw	148	Q4-1-15
09100200UHF0	Attachment(R) - Set	140	Q2-1-2
09100300UHF0	Attachment(L) - Set	140	Q2-1-3
09100410U000	Attachment (Set-L)	136	Q1-1-23
09100410U000	Attachment (Set-L)	144	Q3-1-23
09100410U000	Attachment (Set-L)	148	Q4-1-25
09100510U000	Attachment (Set-R)	136	Q1-1-24
09100510U000	Attachment (Set-R)	144	Q3-1-24
09100510U000	Attachment (Set-R)	148	Q4-1-26
09200000U000	Attachment (L)	136	Q1-1-22
09200000U000	Attachment (L)	144	Q3-1-18
09200000U000	Attachment (L)	148	Q4-1-21
09200100U000	Attachment (L)	136	Q1-1-11
09200100U000	Attachment (L)	144	Q3-1-16
09200100U000	Attachment (L)	148	Q4-1-12
09600300UH60	Square Frame Connecting Plate	142	Q2-3-1
10000100A000	THREAD GUIDE L=200	101	J-1-18
10-003M-PT01	Side Cover Screw (M4xL8)	122	M-2-8
10-005A-DU33	Earth Plate	122	M-2-12
10-006S-AT10	IO MC Board Connecting Stud (3-5-20)	120	M-1-10
10009EL-A002	UPPER THREAD CATCHER SOL.	22	C-2-11
10010SC-8119	Plus Screw (M3*L5)	138	Q1-3-8
10010SC-8119	Plus Screw (M3*L5)	142	Q2-3-11
10010SC-8119	Plus Screw (M3*L5)	146	Q3-3-9
10010SC-8119	Plus Screw (M3*L5)	150	Q4-3-9
10011SC-8119	Plus Screw (M3*L6)	137	Q1-2-4
10011SC-8119	Plus Screw (M3*L6)	141	Q2-2-5
10011SC-8119	Plus Screw (M3*L6)	145	Q3-2-3
10011SC-8119	Plus Screw (M3*L6)	149	Q4-2-3
10-021B-DU33	DUAL Sticker(9)	122	M-2-24
10-028S-CS53	LAMP Board Screw(set) (M3xL7)	121	M-1-39
10-028S-CS53	Wiper Motor Driver Screw(set) (M3xL7)	121	M-1-40
10-028S-SC53	IO MC Board Screw(set) (M3xL7)	120	M-1-11
10-028S-SC53	IO LED Board Screw(set) (M3xL7)	120	M-1-12
10-028S-SC53	DDC Board Screw(set) (M3xL7)	120	M-1-20
10-028S-SC53	DDC LED Board Screw(set) (M3xL7)	120	M-1-21

Part No.	Part Name	Page	Ref.No
10-028S-SC53	UNIT Board Screw(set) (M3xL7)	120	M-1-30
10110000A000	Eyelet "B" (12C)	47	F-2-7
10200100H000	Thread Guide Bush "A-1"	47	F-2-2
10200103B000	Head Face Plate (U) 9C	47	F-2-1
10300003A000	Thread Guide (M) Set (9C)	47	F-2-4
10300004A000	Thread Guide (M) Set (12C)	47	F-2-4
10300005A000	Thread Guide (M) Set (15C)	47	F-2-4
10500110B000	SCREW BUSH C (M8*P0.75)	148	Q4-1-6
10600100H000	THREAD ANGLE FRAME	102	J-1-1
10600110B000	SUB TENSION ADJUSTING SET	102	J-1-10
10600210B000	SUB TENSION ADJUSTING SET	102	J-1-11
10900003I000	Thread Holding Device A'ssy	47	F-2-13
11000110UH00	LAMP BRACKET	125	N-1-5
11005CW-UK01	SPOOL PLATE FIXING BOLT M6*L21	101	J-1-3
11009PR-B001	Thread Breakage Detecting Plate	52	G-1-8
11009SC-A001	Stud Screw	54	G-3-8
11012PR-B001	Thread Guide	47	F-2-10
11012PR-B001	Thread Guide (New)	52	G-1-11
11014SN-1211	Hex.Nut (M3-No2)	29	D-3-6
11014SN-1211	Hex.Nut (M3-No2)	52	G-1-10
11014SN-1211	Hex.Nut (M3-No2)	52	G-1-13
11019SW-9115	Spring Washer (3@)	23	C-3-21
11019SW-9115	Spring Washer (3@)	57	H1-1-53
11019SW-9115	Spring Washer (3@)	59	H1-3-10
11019SW-9115	Spring Washer (3@)	60	H1-4-9
11019SW-9115	Spring Washer (3@)	61	H1-5-5
11019SW-9115	Spring Washer (3@)	65	H2-1-53
11019SW-9115	Spring Washer (3@)	67	H2-3-10
11019SW-9115	Spring Washer (3@)	73	H3-1-53
11019SW-9115	Spring Washer (3@)	75	H3-3-10
11019SW-9115	SPRING WASHER (3@)	76	H3-4-9
11019SW-9115	SPRING WASHER (3@)	78	H3-6-28
11019SW-9115	Spring Washer (3@)	82	H4-1-53
11019SW-9115	Spring Washer (3@)	84	H4-3-10
11019SW-9115	Spring Washer (3@)	85	H4-4-9
11019SW-9115	SPRING WASHER (3@)	87	H4-6-30
11020PM-B001	Tension Plate Holder (15C)	52	G-1-16
11021SC-4113	Hex. Socket Bolt (M4*L35)	52	G-1-17
11029SC-4113	Hex. Socket Bolt (M4*L20)	56	H1-1-25
11029SC-4113	Hex. Socket Bolt (M4*L20)	64	H2-1-25
11029SC-4113	Hex. Socket Bolt (M4*L20)	72	H3-1-25
11029SC-4113	Hex. Socket Bolt (M4*L20)	81	H4-1-25
11029SC-4113	Hex. Socket Bolt (M4*L20)	92	I-2-13
11029SC-4113	Hex. Socket Bolt (M4*L20)	98	I1-2-13
11029SC-4113	Hex. Socket Bolt (M4*L20)	136	Q1-1-4
11029SC-4113	Hex. Socket Bolt (M4*L20)	144	Q3-1-4
11029SC-4113	Hex. Socket Bolt (M4*L20)	148	Q4-1-4
11032PR-T151	CABLE SUPPORTER	54	G-3-3
11047PR-A002	Cable Support "B"	47	F-2-24
11049SC-A001	Board Stud Bolt	114	L-1-18
11075PM-B001	Thread Sensor Roller(B1)Set	53	G-2-1
11083CW-B001	Thread Detecting Wheel Stud "A"	53	G-2-6
11101200T000	Upper Dead Point Stopper	45	F-1-13

Part No.	Part Name	Page	Ref.No
116410S-8118	Driver Screw 11/64-40,L10	94	I-4-18
116410S-8118	Driver Screw 11/64-40,L10	94	I-4-19
12001703I000	Head Face Plate(L) (9C)	47	F-2-9
12001704I000	Head Face Plate(L) (12C)	47	F-2-9
12001900U060	Upper Thread Hook Motor Cover	91	I-1-42
12001900U060	Upper Thread Hook Motor Cover	97	I1-1-42
12004PR-W121	SPOOL PLATE SUPPORT BASE	101	J-1-7
12010SN-1211	Hex.Nut (M5)	49	F-3-23
12010SN-1211	Hex.Nut (M5)	59	H1-3-17
12010SN-1211	Hex.Nut (M5)	67	H2-3-17
12010SN-1211	Hex.Nut (M5)	75	H3-3-17
12010SN-1211	Hex.Nut (M5)	84	H4-3-17
12010SN-1211	HEX.NUT (M5)	101	J-1-13
12012PM-A001	SPOOL HOLDER	101	J-1-8
12012-PM-A001	Spool Holder	130	O-1-5
12015SF-A001	SPOOL STAND (L=330)	101	J-1-17
12017PU-T121	Timing Pulley "A"	60	H1-4-11
12017PU-T121	Timing Pulley "A"	68	H2-4-11
12017PU-T121	Timing Pulley "A"	76	H3-4-11
12017PU-T121	Timing Pulley "A"	85	H4-4-11
12018BR-T121	Needle Bearing Hk1010(Ina)	56	H1-1-34
12018BR-T121	Needle Bearing Hk1010(Ina)	60	H1-4-11
12018BR-T121	Needle Bearing Hk1010(Ina)	64	H2-1-34
12018BR-T121	Needle Bearing Hk1010(Ina)	68	H2-4-11
12018BR-T121	Needle Bearing Hk1010(Ina)	72	H3-1-34
12018BR-T121	Needle Bearing Hk1010(Ina)	76	H3-4-12
12018BR-T121	Needle Bearing Hk1010(Ina)	81	H4-1-34
12018BR-T121	Needle Bearing Hk1010(Ina)	85	H4-4-12
12019BR-T121	FIBER WASHER R-TW1020	34	E-2-24
12019BR-T121	FIBER WASHER R-TW1020	40	E1-2-24
12019BR-T121	Fiber Washer R-Tw1020	56	H1-1-35
12019BR-T121	Fiber Washer R-Tw1020	60	H1-4-12
12019BR-T121	Fiber Washer R-Tw1020	64	H2-1-35
12019BR-T121	Fiber Washer R-Tw1020	68	H2-4-12
12019BR-T121	Fiber Washer R-Tw1020	72	H3-1-35
12019BR-T121	FIBER WASHER R-TW1020	76	H3-4-13
12019BR-T121	Fiber Washer R-Tw1020	81	H4-1-35
12019BR-T121	Fiber Washer R-Tw1020	85	H4-4-13
12033RB-UK01	CUSHION RUBBER	101	J-1-14
12042PM-A001	EYELET	102	J-1-14
12048BT-T121	X-Axis Timing Belt	60	H1-4-5
12048BT-T121	X-Axis Timing Belt	68	H2-4-5
12052SF-A001	SPOOL SPONGE	101	J-1-9
12209100U000	CAP GUIDE	92	I-2-18
12209100U000	CAP GUIDE	98	I1-2-18
13001CA-UK06	Color Change Base	49	F-3-1
13003000T000	Mes Shaft Collar	30	D-4-17
13005CM-UK06	Color Change Cam	49	F-3-12
13007CW-UK06	Color Change Shaft	49	F-3-7
13009SC-A001	COLOR CHANGE CAM GEAR SCREW	101	J-1-10
13010BR-T121	Washer(@12*@26*1T)	49	F-3-10
13010CW-UK06	Color Change Collar	49	F-3-14
13015PR-UK06	Potentiometer Bracket	50	F-4-12

R. Index

Part No.	Part Name	Page	Ref.No
13019PR-A001	Half Turm Film Washer (T1.0)	50	F-4-9
13020GA-UK06	Color Change Gear (L)	50	F-4-7
13020SC-4113	HEX. SOCKET BOLT (M3*L8)	76	H3-4-8
13021GA-UK06	Color Change Gear (R)	49	F-3-15
13022AD-UK06	Color Change Passivity Handle	50	F-4-5
13026BR-T121	NEEDLE BEARING (6002Z)	36	E-4-11
13026BR-T121	NEEDLE BEARING (6002Z)	42	E1-4-11
13026BR-T121	Needle Bearing (6002Z)	57	H1-1-46
13026BR-T121	Needle Bearing (6002Z)	65	H2-1-46
13026BR-T121	Needle Bearing (6002Z)	73	H3-1-46
13026BR-T121	Needle Bearing (6002Z)	82	H4-1-46
13026CL-D104	Color Change Roller Base (9C)	49	F-3-20
13026CL-UK06	Color Change Roller Base (12C)	49	F-3-20
13026CL-UK16	Color Change Roller Base (15C)	49	F-3-20
13032AD-UK06	Color Change Film Set	49	F-3-5
13032GA-UK06	INDEX SHAFT GEAR UK06	34	E-2-2
13032GA-UK06	INDEX SHAFT GEAR UK06	34	E-2-15
13032GA-UK06	INDEX SHAFT GEAR UK06	40	E1-2-2
13032GA-UK06	INDEX SHAFT GEAR UK06	40	E1-2-15
13034GA-UK06	MIDDLE SHAFT GEAR UK06	34	E-2-23
13034GA-UK06	MIDDLE SHAFT GEAR UK06	40	E1-2-23
13036BR-UK01	MIDDLE SHAFT GEAR NEEDLE BEARING(@10-@19)NNB	34	E-2-23
13036BR-UK01	MIDDLE SHAFT GEAR NEEDLE BEARING(@10-@19)NNB	40	E1-2-23
13038CW-UK01	COLLAR	34	E-2-25
13038CW-UK01	COLLAR	40	E1-2-25
13041BR-UK01	Washer(12*@26*1T)	49	F-3-11
13041SH-UK01	MIDDLE SHAFT	34	E-2-18
13041SH-UK01	MIDDLE SHAFT	40	E1-2-18
13042SN-1111	HEX.NUT (M6*T5-R)	36	E-4-10
13042SN-1111	HEX.NUT (M6*T5-R)	42	E1-4-10
13042SN-1111	Hex.Nut (M6*T5-R)	90	I-1-32
13042SN-1111	Hex.Nut (M6*T5-R)	96	I1-1-32
13048SC-A001	Bracket "A" Screw	128	N-4-3
13053PR-UK01	ANGLE PLATE BASE	33	E-1-13
13053PR-UK01	ANGLE PLATE BASE	39	E1-1-13
13054ET-UK01	ANGLE DISK(L)	33	E-1-18
13054SC-3123	Switch Cover Screw(set) (M3xL8)	121	M-1-44
13054SC-3123	Truss Screw (M3*L8)	130	O-1-19
13061SC-8119	PLUS SCREW (M3*L10)	33	E-1-14
13061SC-8119	PLUS SCREW (M3*L10)	34	E-2-8
13061SC-8119	PLUS SCREW (M3*L10)	39	E1-1-14
13061SC-8119	PLUS SCREW (M3*L10)	40	E1-2-8
13061SC-8119	Plus Screw (M3*L10)	90	I-1-15
13061SC-8119	Plus Screw (M3*L10)	96	I1-1-15
13106PR-UK01	IDLER SPACER	36	E-4-13
13106PR-UK01	IDLER SPACER	42	E1-4-13
13107CW-UK01	COLLAR	33	E-1-6
13107CW-UK01	COLLAR	39	E1-1-6
13118CS-UK01	IDLER SUPPORT BRACKET	36	E-4-5
13118CS-UK01	IDLER SUPPORT BRACKET	42	E1-4-5
13120CW-UK01	IDLER SHAFT	36	E-4-12
13120CW-UK01	IDLER SHAFT	42	E1-4-12
13123CW-E121	IDELR PLATE	36	E-4-1

Part No.	Part Name	Page	Ref.No
13123CW-E121	IDELR PLATE	42	E1-4-1
14002SC-7113	Hex.Socket Bolt (M6*L15)	56	H1-1-7
14002SC-7113	Hex. Socket Bolt (M6*L15)	66	H2-2-6
14002SC-7113	Hex. Socket Bolt (M6*L15)	74	H3-2-6
14002SC-7113	Hex.Socket Bolt (M6*L15)	81	H4-1-7
14002SC-7113	HEX.SOCKET BOLT (M6*L15)	126	N-2-7
14003SC-4113	HEX. SOCKET BOLT (M8*L20)	134	P-2-7
14006SC-7113	HEX.SOCKET SET SCREW(M8*L15)	33	E-1-15
14006SC-7113	HEX.SOCKET SET SCREW(M8*L15)	39	E1-1-15
14006SC-7113	Hex.Socket Bolt (M8*L15)	64	H2-1-7
14006SC-7113	Hex.Socket Bolt (M8*L15)	72	H3-1-7
14006SC-7113	HEX.SOCKET SET SCREW(M8*L15)	134	P-2-11
14014SC-7113	Hex.Socket Set Screw(M5*L8)	125	N-1-9
14020PR-UK01	Space	61	H1-5-14
14020PR-UK01	Space	69	H2-5-15
14020PR-UK01	SPACE	77	H3-5-24
14020PR-UK01	Space	86	H4-5-16
14027SC-4113	HEX.SOCKET BOLT (M8*L30)	36	E-4-6
14027SC-4113	HEX.SOCKET BOLT (M8*L30)	42	E1-4-6
14027SC-4113	Hex.Socket Bolt (M8*L30)	58	H1-2-6
14027SC-4113	Hex. Socket Bolt	64	H2-1-2
14027SC-4113	Hex. Socket Bolt	72	H3-1-2
14027SC-4113	Hex.Socket Bolt (M8*L30)	83	H4-2-6
14045AD-UK01	Belt Bracket (B)	60	H1-4-1
14045AD-UK01	Belt Bracket (B)	61	H1-5-19
14045AD-UK01	Belt Bracket (B)	68	H2-4-1
14045AD-UK01	Belt Bracket (B)	69	H2-5-16
14045AD-UK01	BELT BRACKET (B)	76	H3-4-1
14045AD-UK01	BELT BRACKET (B)	77	H3-5-29
14045AD-UK01	Belt Bracket (B)	85	H4-4-1
14045AD-UK01	Belt Bracket (B)	86	H4-5-17
14046SC-7113	HEX.SOCKET BOLT (M6*L30)	37	E-5-6
14046SC-7113	HEX.SOCKET BOLT (M6*L30)	43	E1-5-6
14046SC-7113	Hex.Socket Bolt (M6*L30)	66	H2-2-2
14046SC-7113	Hex.Socket Bolt (M6*L30)	74	H3-2-2
14046SC-7113	Hex.Socket Bolt (M6*L30)	83	H4-2-2
14048AD-UK01	Belt Bracket (A)	61	H1-5-18
14048AD-UK01	Belt Bracket (A)	69	H2-5-17
14048AD-UK01	BELT BRACKET (A)	77	H3-5-30
14048AD-UK01	Belt Bracket (A)	86	H4-5-20
14049AD-UK01	Belt Bracket (C)	60	H1-4-2
14049AD-UK01	Belt Bracket (C)	68	H2-4-2
14049AD-UK01	BELT BRACKET (C)	76	H3-4-2
14049AD-UK01	Belt Bracket (C)	85	H4-4-2
14051PR-UK01	Fixing Plate	60	H1-4-6
14051PR-UK01	Fixing Plate	68	H2-4-6
14051PR-UK01	FIXING PLATE	76	H3-4-6
14051PR-UK01	Fixing Plate	85	H4-4-6
14052PR-UK01	Fixing Plate Holder	60	H1-4-7
14052PR-UK01	Fixing Plate Holder	68	H2-4-7
14052PR-UK01	FIXING PLATE HOLDER	76	H3-4-7
14052PR-UK01	Fixing Plate Holder	85	H4-4-7
14058CW-A001	COLLAR "A"	33	E-1-11

Part No.	Part Name	Page	Ref.No
14058CW-A001	COLLAR "A"	39	E1-1-11
14058CW-A001	Bearing Stopper Collar	66	H2-2-10
14058CW-A001	Bearing Stopper Collar	74	H3-2-10
14060AF-4517	Hex.Socket Screw(M6*L6)	25	C-5-11
14060AF-4517	HEX.SOCKET SCREW(M6*L6)	33	E-1-7
14060AF-4517	HEX.SOCKET SCREW(M6*L6)	33	E-1-12
14060AF-4517	HEX.SOCKET SCREW(M8*L6)	35	E-3-13
14060AF-4517	HEX.SOCKET SCREW(M6*L6)	35	E-3-15
14060AF-4517	HEX.SOCKET SCREW(M6*L6)	35	E-3-17
14060AF-4517	HEX.SOCKET SCREW(M6*L6)	36	E-4-14
14060AF-4517	HEX.SOCKET SCREW(M6*L6)	39	E1-1-7
14060AF-4517	HEX.SOCKET SCREW(M6*L6)	39	E1-1-12
14060AF-4517	HEX.SOCKET SCREW(M6*L6)	40	E1-2-6
14060AF-4517	HEX.SOCKET SCREW(M6*L6)	41	E1-3-13
14060AF-4517	HEX.SOCKET SCREW(M6*L6)	41	E1-3-15
14060AF-4517	HEX.SOCKET SCREW(M6*L6)	41	E1-3-17
14060AF-4517	HEX.SOCKET SCREW(M6*L6)	42	E1-4-14
14060AF-4517	Hex. Socket Bolt (M6*L6)	66	H2-2-27
14060AF-4517	Hex. Socket Bolt (M6*L6)	74	H3-2-27
14060CW-UK01	TIMING PULLEY DRIVING PIN	76	H3-4-14
14061AF-4517	HEX.SOCKET SCREW(M8*L8)	33	E-1-10
14061AF-4517	HEX.SOCKET SCREW(M8*L8)	39	E1-1-10
14061AF-4517	Hex. Socket Bolt (M8*L8)	66	H2-2-17
14061AF-4517	Hex. Socket Bolt (M8*L8)	74	H3-2-17
14063PU-UK01	Timing Pulley "B"	60	H1-4-26
14063PU-UK01	Timing Pulley "B"	68	H2-4-25
14063PU-UK01	Timing Pulley "B"	76	H3-4-27
14063PU-UK01	Timing Pulley "B"	85	H4-4-27
14063SC-A001	TENSION CONTROL BOLT (M6*L40)	36	E-4-9
14063SC-A001	Tension Control Bolt (M6*L40)	37	E-5-16
14063SC-A001	TENSION CONTROL BOLT (M6*L40)	42	E1-4-9
14063SC-A001	Tension Control Bolt (M6*L40)	43	E1-5-16
14065AD-UK01	Motor Fixing Shaft (A)	60	H1-4-28
14065AD-UK01	Motor Fixing Shaft (A)	68	H2-4-27
14065AD-UK01	MOTOR FIXING SHAFT (A)	76	H3-4-29
14065AD-UK01	Motor Fixing Shaft (A)	85	H4-4-29
14067AD-UK01	Motor Fixing Shaft (B)	60	H1-4-24
14067AD-UK01	Motor Fixing Shaft (B)	68	H2-4-23
14067AD-UK01	MOTOR FIXING SHAFT (B)	76	H3-4-25
14067AD-UK01	Motor Fixing Shaft (B)	85	H4-4-25
14069AD-UK01	Motor Block	68	H2-4-28
14069AD-UK01	Motor Block	76	H3-4-30
14069AD-UK01	Motor Block	85	H4-4-30
14071BR-UK01	Bearing Bc616Zz	68	H2-4-29
14071BR-UK01	Bearing Bc616Zz	76	H3-4-33
14071BR-UK01	Bearing Bc616Zz	85	H4-4-31
14074PR-UK01	Motor Base (L)	68	H2-4-21
14074PR-UK01	MOTOR BASE (L)	76	H3-4-23
14074PR-UK01	Motor Base (L)	85	H4-4-22
14075PR-UK01	Motor Base (R)	68	H2-4-20
14075PR-UK01	MOTOR BASE (R)	76	H3-4-22
14075PR-UK01	Motor Base (R)	85	H4-4-23
15001BR-B001	Cam Roller Bearing	59	H1-3-18

R. Index

Part No.	Part Name	Page	Ref.No
15001BR-B001	Cam Roller Bearing	67	H2-3-18
15001BR-B001	Cam Roller Bearing	75	H3-3-18
15001BR-B001	Cam Roller Bearing	84	H4-3-18
15002CW-B001	Cam Roller Stud (A)	59	H1-3-13
15002CW-B001	Cam Roller Stud (A)	84	H4-3-13
15003CW-B001	Cam Roller Stud (B)	59	H1-3-16
15003CW-B001	Cam Roller Stud (B)	67	H2-3-16
15003CW-B001	Cam Roller Stud (B)	75	H3-3-16
15003CW-B001	Cam Roller Stud (B)	84	H4-3-16
15007PR-UK02	Connecting Plate(L)	69	H2-5-3
15007PR-UK02	CONNECTING PLATE(L)	77	H3-5-4
15007PR-UK02	Connecting Plate(L)	86	H4-5-4
15011PR-UK02	CONNECTING PLATE(R)	77	H3-5-8
15011PR-UK02	Connecting Plate(R)	86	H4-5-8
15012MT-T121	Potentiometer (7824 R1K L25)	50	F-4-10
15014PR-T121	Potentiometer Washer	50	F-4-11
15015PR-UK02	Connecting Plate	61	H1-5-8
15015PR-UK02	Connecting Plate	69	H2-5-8
15015PR-UK02	Connecting Plate	77	H3-5-12
15015PR-UK02	Connecting Plate	86	H4-5-9
15-027A-2070	SENSOR	90	I-1-14
15-027A-2070	SENSOR	96	I1-1-14
15029AF-T121	Roller Set	49	F-3-21
15029SN-3211	Hex. Nut (M4-No2)	59	H1-3-14
15029SN-3211	Hex. Nut (M4-No2)	67	H2-3-14
15029SN-3211	Hex. Nut (M4-No2)	75	H3-3-14
15029SN-3211	Hex. Nut (M4-No2)	84	H4-3-14
15030SC-7113	HEX. SOCKET BOLT (M5*L30)	37	E-5-2
15030SC-7113	HEX. SOCKET BOLT (M5*L30)	43	E1-5-2
15030SC-7113	Hex. Socket Bolt (M5*L30)	56	H1-1-28
15030SC-7113	Hex. Socket Bolt (M5*L30)	81	H4-1-28
15034SC-4113	Hex. Socket Bolt (M4*L45)	60	H1-4-3
15034SC-4113	Hex. Socket Bolt (M4*L45)	61	H1-5-20
15034SC-4113	Hex. Socket Bolt (M4*L45)	68	H2-4-3
15034SC-4113	Hex. Socket Bolt (M4*L45)	69	H2-5-18
15034SC-4113	HEX. SOCKET Bolt (M4*L45)	76	H3-4-3
15034SC-4113	HEX. SOCKET Bolt (M4*L45)	77	H3-5-31
15034SC-4113	Hex. Socket Bolt (M4*L45)	85	H4-4-3
15034SC-4113	Hex. Socket Bolt (M4*L45)	86	H4-5-18
15042SC-3123	Truss Screw (M4*L6)	62	H1-6-5
15042SC-3123	TRUSS SCREW (M4*L6)	62	H1-6-12
15042SC-3123	Truss Screw (M4*L6)	70	H2-6-5
15042SC-3123	Truss Screw (M4*L6)	70	H2-6-14
15042SC-3123	TRUSS SCREW (M4*L6)	78	H3-6-6
15042SC-3123	TRUSS SCREW (M4*L6)	78	H3-6-17
15042SC-3123	Truss Screw (M4*L6)	87	H4-6-6
15042SC-3123	Truss Screw (M4*L6)	87	H4-6-14
15042SC-3123	TRUSS SCREW (M4*L6)	127	N-3-3
15042SC-3123	Truss Screw (M4*L6)	130	O-1-9
15042SC-3123	Truss Screw (M4*L6)	138	Q1-3-17
15042SC-3123	Truss Screw (M4*L6)	142	Q2-3-15
15042SC-3123	Truss Screw (M4*L6)	146	Q3-3-11
15042SC-3123	Truss Screw (M4*L6)	146	Q3-3-13

Part No.	Part Name	Page	Ref.No
15042SC-3123	Truss Screw (M4*L6)	150	Q4-3-13
15043EL-UK01	X-Positioning Sensor	87	H4-6-18
15044EL-T121	Bid (S)	60	H1-4-33
15044EL-T121	Bid (S)	68	H2-4-30
15044EL-T121	Bid (S)	76	H3-4-34
15044EL-T121	Bid (S)	85	H4-4-32
15045EL-UK01	Bid (L)	58	H1-2-15
15045EL-UK01	Bid (L)	60	H1-4-34
15045EL-UK01	Bid (L)	79	H3-6-56
15045EL-UK01	Bid (L)	83	H4-2-16
15045EL-UK01	Bid (L)	88	H4-6-52
15048SC-4119	Plus Screw (M5*L12)	60	H1-4-14
15048SC-4119	PLUS SCREW (M5*L12)	76	H3-4-15
15048SC-4119	Plus Screw (M5*L12)	85	H4-4-15
15053SC-4119	Plus Screw (M5*L30)	60	H1-4-23
15053SC-4119	Plus Screw (M5*L30)	68	H2-4-22
15053SC-4119	PLUS SCREW (M5*L30)	76	H3-4-24
15053SC-4119	Plus Screw (M5*L30)	85	H4-4-24
15055SC-4119	Plus Screw (M5*L35)	60	H1-4-25
15055SC-4119	Plus Screw (M5*L35)	68	H2-4-24
15055SC-4119	PLUS SCREW (M5*L35)	76	H3-4-26
15055SC-4119	Plus Screw (M5*L35)	85	H4-4-26
15057CS-UK01	Y-Driving Motor Bracket	58	H1-2-5
15059PR-UK02	X-Motor Space	60	H1-4-20
15060PR-UK02	X-Motor Base(L)	60	H1-4-22
15061PR-UK01	Motor Space (@5*@11*2T)	68	H2-4-19
15061PR-UK01	MOTOR SPACE (@5*@11*2T)	76	H3-4-21
15061PR-UK01	Motor Space (@5*@11*2T)	85	H4-4-21
15061PR-UK02	X-Motor Base(R)	60	H1-4-21
15062SF-T121	Felt	62	H1-6-2
15062SF-T121	Felt	78	H3-6-2
15062SF-T121	Felt	87	H4-6-2
15064AF-A001	C.S Screw (M3*L3.5)	141	Q2-2-12
15064AF-A001	C.S Screw (M3*L3.5)	141	Q2-2-14
15064AF-A001	C.S Screw (M3*L3.5)	149	Q4-2-11
15067PR-UK01	Sensor Plate	70	H2-6-17
15067PR-UK01	SENSOR PLATE	79	H3-6-44
15067PR-UK01	Sensor Plate	87	H4-6-17
15076AF-UK01	X-Motor (103H8221-5044)	68	H2-4-16
15076AF-UK01	X-MOTOR	76	H3-4-17
15076AF-UK01	X-Motor	85	H4-4-17
15077BR-A001	Ball Bearing (698Zz)	60	H1-4-32
15082PR-W121	FIXING PLATE FOR BUSHING	62	H1-6-7
15082PR-W121	FIXING PLATE FOR BUSHING	79	H3-6-42
15082PR-W121	FIXING PLATE FOR BUSHING	87	H4-6-32
15087PR-UK02	Cable Plate For Bushing	62	H1-6-9
15087PR-UK02	CABLE PLATE FOR BUSHING	79	H3-6-57
15087PR-UK02	Cable Plate For Bushing	88	H4-6-48
15089SC-7119	C.S Screw (M4*L10)	52	G-1-4
15089SC-7119	C.S Screw (M4*L12)	105	K-2-28
15089SC-7119	C.S SCREW (M4*L10)	126	N-2-2
15095SW-3115	Spring Washer (@8)	19	B-6-3
15095SW-3115	Spring Washer (@8)	25	C-5-3

Part No.	Part Name	Page	Ref.No
15095SW-3115	Spring Washer (@8)	28	D-2-17
15095SW-3115	Spring Washer (@8)	31	D-5-8
15095SW-3115	SPRING WAHSER(@8)	33	E-1-16
15095SW-3115	SPRING WASHER(@8)	36	E-4-7
15095SW-3115	SPRING WAHSER(@8)	39	E1-1-16
15095SW-3115	SPRING WASHER(@8)	42	E1-4-7
15095SW-3115	Spring Washer (@8)	56	H1-1-5
15095SW-3115	Spring Washer (@8)	58	H1-2-7
15095SW-3115	Spring Washer (@8)	64	H2-1-4
15095SW-3115	Spring Washer (@6)	64	H2-1-8
15095SW-3115	Spring Washer (@8)	66	H2-2-31
15095SW-3115	Spring Washer (@8)	72	H3-1-4
15095SW-3115	Spring Washer (@6)	72	H3-1-8
15095SW-3115	Spring Washer (@8)	74	H3-2-31
15095SW-3115	Spring Washer (@8)	78	H3-6-32
15095SW-3115	Spring Washer (@8)	81	H4-1-4
15095SW-3115	Spring Washer (@8)	83	H4-2-7
15095SW-3115	SPRING WASHER (@8)	90	I-1-28
15095SW-3115	SPRING WASHER (@8)	96	I1-1-28
15095SW-3115	SPRING WASHER (@8)	134	P-2-8
15095SW-3115	SPRING WASHER (@8)	134	P-2-12
15095SW-4115	Spring Washer (@8)	123	M-3-4
15104CW-UK01	Roller Stud Bolt	78	H3-6-34
15104CW-UK01	Roller Stud Bolt	88	H4-6-40
15105SC-4113	HEX.SOCKET BOLT (M4*L15)	126	N-2-17
15106BR-A001	Flange Bearing (1280Zz)	79	H3-6-35
15106BR-A001	Flange Bearing (1280Zz)	88	H4-6-42
15107CW-UK01	Roller Collar	79	H3-6-37
15107CW-UK01	Roller Collar	88	H4-6-43
15112SC-7113	HEX. SOCKET SET SCREW(M3*L8)	78	H3-6-27
15112SC-7113	HEX. SOCKET SET SCREW(M3*L8)	87	H4-6-29
15130AF-A001	Roller Guide	79	H3-6-36
15130AF-A001	Roller Guide	88	H4-6-41
15159SR-4013	E-Ring (3@)	94	I-4-16
15159SR-4013	E-Ring (3@)	137	Q1-2-10
15159SR-4013	E-Ring (3@)	141	Q2-2-9
15159SR-4013	E-Ring (3@)	145	Q3-2-9
15159SR-4013	E-Ring (3@)	149	Q4-2-9
16005RB-A001	Table Support End Cap(L)	105	K-2-8
16005RB-A001	Fixed Table "D"(3X3공용)	108	K-5-11
16009SC-4113	HEX.SOCKET BOLT(M10*L25)	35	E-3-2
16009SC-4113	HEX.SOCKET BOLT(M10*L25)	41	E1-3-2
16009SC-4113	HEX.SOCKET BOLT(M10*L25)	105	K-2-4
16009SC-8330	TAPPING SCREW (M6*L20)	104	K-1-7
16009SC-8330	TAPPING SCREW (M6*L20)	104	K-1-15
16009SC-8330	TAPPING SCREW (M6*L20)	104	K-1-20
16009SC-8330	TAPPING SCREW (M6*L20)	105	K-2-6
16009SC-8330	Tapping Screw (M6*L20)	106	K-3-25
16009SC-8330	Tapping Screw (M6*L20)	106	K-3-27
16009SC-8330	TAPPING SCREW (M6*L20)	106	K-3-29
16009SC-8330	TAPPING SCREW (M6*L20)	107	K-4-19
16009SC-8330	TAPPING SCREW (M6*L20)	107	K-4-23
16009SC-8330	Tapping Screw (M6*L20)	109	K-5-35

R. Index

Part No.	Part Name	Page	Ref.No
16009SC-8330	Tapping Screw (M6*L20)	109	K-5-37
16009SC-8330	TAPPING SCREW (M6*L20)	109	K-5-39
16009SC-8330	Tapping Screw (M6*L20)	111	K-6-35
16009SC-8330	Tapping Screw (M6*L20)	111	K-6-37
16009SC-8330	TAPPING SCREW (M6*L20)	111	K-6-39
16014SW-4115	Spring Washer (@6)	56	H1-1-8
16014SW-4115	Spring Washer (@6)	66	H2-2-3
16014SW-4115	Spring Washer (@6)	66	H2-2-7
16014SW-4115	Spring Washer (@6)	74	H3-2-3
16014SW-4115	Spring Washer (@6)	74	H3-2-7
16014SW-4115	Spring Washer (@6)	81	H4-1-8
16014SW-4115	Spring Washer (@6)	83	H4-2-3
16014SW-4115	Spring Washer (@6)	90	I-1-4
16014SW-4115	Spring Washer (@6)	96	I1-1-4
16014SW-4115	Spring Washer (@6)	125	N-1-7
16014SW-4115	SPRING WASHER (@6)	126	N-2-8
16014SW-4115	Spring Washer (@4)	126	N-2-18
16016PR-UK01	GEAR COVER	105	K-2-30
16016PR-UK01	GEAR COVER	106	K-3-30
16018PR-UK01	MES CAM DRIVING BOX COVER	106	K-3-7
16018PR-UK01	MES CAM DRIVING BOX COVER	107	K-4-13
16018PR-UK01	MES CAM DRIVING BOX COVER	108	K-5-12
16018PR-UK01	MES CAM DRIVING BOX COVER	110	K-6-15
16018SW-1111	Washer (@5)	24	C-4-7
16018SW-1111	Washer (@5)	56	H1-1-12
16018SW-1111	Washer (@5)	56	H1-1-30
16018SW-1111	Washer (@5)	57	H1-1-39
16018SW-1111	Washer (@5)	58	H1-2-4
16018SW-1111	Washer (@5)	60	H1-4-19
16018SW-1111	Washer (@5)	64	H2-1-12
16018SW-1111	Washer (@5)	64	H2-1-30
16018SW-1111	Washer (@5)	65	H2-1-39
16018SW-1111	Washer (@5)	72	H3-1-12
16018SW-1111	Washer (@5)	72	H3-1-30
16018SW-1111	Washer (@5)	73	H3-1-39
16018SW-1111	WASHER (@5)	76	H3-4-20
16018SW-1111	Washer (@5)	81	H4-1-12
16018SW-1111	Washer (@5)	81	H4-1-30
16018SW-1111	Washer (@5)	82	H4-1-39
16018SW-1111	Washer (@5)	85	H4-4-20
16018SW-1111	WASHER (@5)	104	K-1-6
16018SW-1111	WASHER (@5)	104	K-1-10
16018SW-1111	WASHER (@5)	104	K-1-14
16018SW-1111	WASHER (@5)	104	K-1-19
16018SW-1111	WASHER (@5)	105	K-2-13
16018SW-1111	WASHER (@5)	105	K-2-18
16018SW-1111	Washer (@5)	113	L-1-4
16018SW-1111	Washer (@5)	113	L-1-7
16018SW-1111	Control Box Washer	122	M-2-19
16018SW-1111	Stud Bolt Washer(S) (@5)	123	M-3-10
16018SW-1111	WASHER (@5)	127	N-3-12
16019SW-4115	SPRING WASHER (@5)	76	H3-4-19
16019SW-4115	SPRING WASHER (@5)	76	H3-4-32

Part No.	Part Name	Page	Ref.No
16019SW-4115	SPRING WASHER (@5)	104	K-1-5
16019SW-4115	SPRING WASHER (@5)	104	K-1-9
16019SW-4115	SPRING WASHER (@5)	104	K-1-13
16019SW-4115	SPRING WASHER (@5)	104	K-1-18
16019SW-4115	SPRING WASHER (@5)	105	K-2-12
16019SW-4115	SPRING WASHER (@5)	105	K-2-17
16019SW-4115	Control Box Spring Washer	122	M-2-18
16019SW-4115	Spring Washer (@5)	123	M-3-9
16021CW-A001	Table Support Stud	31	D-5-6
16028SC-7113	Hex. Socket Bolt (M5*L25)	64	H2-1-28
16028SC-7113	Hex. Socket Bolt (M5*L25)	72	H3-1-28
16029SW-3115	SPRING WASHER (10@)	12	A-2-26
16029SW-4115	SPRING WASHER (10@)	105	K-2-5
16052AD-UK01	TABLE SUPPORT GUIDE	105	K-2-19
16055MT-UK06	Y Motor	58	H1-2-1
16058AD-UK01	TABLE SUPPORT PLATE (B)	105	K-2-27
16059MT-E131	Y Motor (103H89222-5212)	66	H2-2-1
16059MT-E131	Y Motor (103H89222-5212)	74	H3-2-1
16059MT-E131	Y Motor (103H89222-5212)	83	H4-2-1
16059SC-7113	Hex. Socket Bolt (M6*L20)	65	H2-1-45
16059SC-7113	Hex. Socket Bolt (M6*L20)	73	H3-1-45
16061PR-UK01	TABLE SUPPORT PLATE (A)	105	K-2-25
16063PM-UK01	TABLE HOLDING BLOCK	106	K-3-28
16063PM-UK01	TABLE HOLDING BLOCK	107	K-4-18
16063PM-UK01	TABLE HOLDING BLOCK	109	K-5-38
16063PM-UK01	TABLE HOLDING BLOCK	111	K-6-38
16065PR-UK01	CLAMP PLATE	106	K-3-24
16065PR-UK01	CLAMP PLATE	107	K-4-22
16065PR-UK01	CLAMP PLATE	109	K-5-34
16065PR-UK01	CLAMP PLATE	111	K-6-34
16067ET-UK01	TABLE TOGGLE CLAMP	106	K-3-26
16067ET-UK01	TABLE TOGGLE CLAMP	107	K-4-20
16067ET-UK01	TABLE TOGGLE CLAMP	109	K-5-36
16067ET-UK01	TABLE TOGGLE CLAMP	111	K-6-36
16074PR-UK06	Y-Lm Support Fixing Plate	56	H1-1-6
16074PR-UK06	Y-Lm Support Fixing Plate	64	H2-1-6
16074PR-UK06	Y-Lm Support Fixing Plate	72	H3-1-6
16074PR-UK06	Y-Lm Support Fixing Plate	81	H4-1-6
16100CW-UK06	Timing Pulley Shaft (Y)	56	H1-1-36
16100CW-UK06	Timing Pulley Shaft (Y)	64	H2-1-36
16100CW-UK06	Timing Pulley Shaft (Y)	72	H3-1-36
16100CW-UK06	Timing Pulley Shaft (Y)	81	H4-1-36
16104CL-H001	Belt Catcher Plate (Y)	59	H1-3-12
16104CL-H001	Belt Catcher Plate (Y)	67	H2-3-12
16104CL-H001	Belt Catcher Plate (Y)	75	H3-3-12
16104CL-H001	Belt Catcher Plate (Y)	84	H4-3-12
17012SC-8329	Hex. Socket Set Screw(M4*L16)	105	K-2-26
17014PR-UK01	Tubular Holder "A"	137	Q1-2-3
17014PR-UK01	Tubular Holder "A"	141	Q2-2-3
17014PR-UK01	Tubular Holder "A"	145	Q3-2-2
17014PR-UK01	Tubular Holder "A"	149	Q4-2-2
17015PR-UK01	Tubular Holder "B"	137	Q1-2-5
17015PR-UK01	Tubular Holder "B"	141	Q2-2-4

Part No.	Part Name	Page	Ref.No
17015PR-UK01	Tubular Holder "B"	145	Q3-2-4
17015PR-UK01	Tubular Holder "B"	149	Q4-2-4
17062SC-UK01	Table Support Stopper Screw	105	K-2-23
17063SC-UK01	Table Support Stopper Screw	105	K-2-29
18013AF-7113	Hex. Socket Bolt(M4*L10)	113	L-1-10
18014SW-3115	Spring Washer (@4)	23	C-3-5
18014SW-3115	Spring Washer (@4-No2)	29	D-3-10
18014SW-3115	Spring Washer (@4-No2)	29	D-3-15
18014SW-3115	SPRING WASHER (@4-NO2)	33	E-1-21
18014SW-3115	SPRING WASHER (@4-NO2)	34	E-2-21
18014SW-3115	SPRING WASHER (@4-NO2)	39	E1-1-21
18014SW-3115	SPRING WASHER (@4-NO2)	40	E1-2-21
18014SW-3115	Spring Washer (@4-No2)	49	F-3-3
18014SW-3115	Spring Washer (@4-No2)	56	H1-1-22
18014SW-3115	Spring Washer (@4-No2)	56	H1-1-26
18014SW-3115	Spring Washer (@4-No2)	57	H1-1-41
18014SW-3115	Spring Washer (@4-No2)	59	H1-3-6
18014SW-3115	SPRING WASHER (@4-NO2)	62	H1-6-16
18014SW-3115	Spring Washer (@4-No2)	64	H2-1-22
18014SW-3115	Spring Washer (@4-No2)	64	H2-1-26
18014SW-3115	Spring Washer (@4-No2)	65	H2-1-41
18014SW-3115	Spring Washer (@4-No2)	67	H2-3-6
18014SW-3115	Spring Washer (@4-No2)	68	H2-4-9
18014SW-3115	Spring Washer (@4-No2)	69	H2-5-5
18014SW-3115	Spring Washer (@4-No2)	69	H2-5-11
18014SW-3115	Spring Washer (@4-No2)	70	H2-6-10
18014SW-3115	SPRING WASHER (@4-NO2)	70	H2-6-16
18014SW-3115	Spring Washer (@4-No2)	70	H2-6-19
18014SW-3115	Spring Washer (@4-No2)	72	H3-1-22
18014SW-3115	Spring Washer (@4-No2)	72	H3-1-26
18014SW-3115	Spring Washer (@4-No2)	73	H3-1-41
18014SW-3115	Spring Washer (@4-No2)	75	H3-3-6
18014SW-3115	Spring Washer (@4-No2)	77	H3-5-6
18014SW-3115	SPRING WASHER (@4-NO2)	77	H3-5-10
18014SW-3115	Spring Washer (@4-No2)	77	H3-5-14
18014SW-3115	SPRING WASHER (@4-NO2)	77	H3-5-18
18014SW-3115	SPRING WASHER (@4-NO2)	77	H3-5-22
18014SW-3115	SPRING WASHER (@4-NO2)	77	H3-5-27
18014SW-3115	SPRING WASHER (@4-NO2)	78	H3-6-9
18014SW-3115	SPRING WASHER (@4-NO2)	78	H3-6-13
18014SW-3115	SPRING WASHER (@4-NO2)	78	H3-6-23
18014SW-3115	Spring Washer (@4-No2)	79	H3-6-40
18014SW-3115	Spring Washer (@4-No2)	79	H3-6-48
18014SW-3115	Spring Washer (@4-No2)	81	H4-1-22
18014SW-3115	Spring Washer (@4-No2)	81	H4-1-26
18014SW-3115	Spring Washer (@4-No2)	82	H4-1-41
18014SW-3115	Spring Washer (@4-No2)	84	H4-3-6
18014SW-3115	SPRING WASHER (@4-NO2)	87	H4-6-25
18014SW-3115	Spring Washer (@4-No2)	88	H4-6-38
18014SW-3115	SPRING WASHER (4@)	91	I-1-44
18014SW-3115	Spring Washer (@4-No2)	91	I-1-48
18014SW-3115	Spring Washer (@4-No2)	92	I-2-15
18014SW-3115	SPRING WASHER (4@)	97	I1-1-44

R. Index

Part No.	Part Name	Page	Ref.No
GP-004904-00	Y-LM Guide Cover B	106	K-3-13
GP-004905-00	Y-LM Guide Cover C	106	K-3-15
GP-004906-00	Y-LM Guide Cover D	106	K-3-17
GP-004907-00	TABLE SUPPORT A	105	K-2-1
GP-004907-01	TABLE SUPPORT A	105	K-2-1
GP-004908-00	TABLE SUPPORT B	105	K-2-2
GP-004908-01	TABLE SUPPORT B	105	K-2-2
GP-004909-00	OP Holder Support Cover (B)	106	K-3-22
GP-004909-01	OP Holder Support Cover (B)	106	K-3-22
GP-004910-00	Y-MOTOR COVER	106	K-3-19
GP-004911-00	SPOOL PLATE L=880 UH1504D	101	J-1-1
GP-004913-00	THREAD ANGLE "A" L=820 UH1504D	102	J-1-2
GP-004914-00	THREAD ANGLE "B" L=820 UH1504D	102	J-1-3
GP-004915-00	THREAD ANGLE "C" L=820 UH1504D	102	J-1-4
GP-004916-00	Connecting Plate(R)	61	H1-5-7
GP-004917-00	Connecting Plate(L)	61	H1-5-3
GP-004918-00	X-Lm Guide (Sr15W,L1480)	61	H1-5-1
GP-004919-00	LM Block Driving Plate(L)	61	H1-5-17
GP-004920-00	LM Block Driving Plate(R)	61	H1-5-16
GP-004921-00	Lm Block Connecting Plate(R)	61	H1-5-13
GP-004922-00	Lm Block Connecting Plate(L)	61	H1-5-9
GP-004923-00	Perception Plate	61	H1-5-15
GP-004923-01	Perception Plate	61	H1-5-15
GP-004924-00	X-Frame Cover	62	H1-6-4
GP-004929-00	X-FRAME	62	H1-6-1
GP-004929-01	X-FRAME	62	H1-6-1
GP-004929-02	X-FRAME	62	H1-6-1
GP-004929-03	X-FRAME	62	H1-6-1
GP-004929-04	X-FRAME	62	H1-6-1
GP-004930-00	Y-LM Guide Frame L620	56	H1-1-1
GP-004930-01	Y-LM Guide Frame L620	56	H1-1-1
GP-004932-00	Square Frame (A)	138	Q1-3-1
GP-004933-00	Square Frame (B)	138	Q1-3-2
GP-004934-00	Mes Driving Shaft "A" L=418 UH1504D	27	D-1-17
GP-004935-00	TOP SHAFT A [1447.7mm] UH1504D	35	E-3-19
GP-004936-00	TOP SHAFT B [1259.2mm] UH1504D	41	E1-3-19
GP-004937-00	Upper Thread Driving Shaft A(L=575) UH1504D	91	I-1-41
GP-004938-00	Upper Thread Driving Shaft B(L=649) UH1504D	97	I1-1-41
GP-004941-00	LOW SHAFT A [704mm] UH1504D	34	E-2-17
GP-004942-00	LOW SHAFT B [902.5mm] UH1504D	40	E1-2-17
GP-004943-00	Head Transportation Shaft UH1504D	47	F-2-20
GP-004944-00	Y-Driving Shaft	58	H1-2-14
GP-004945-00	Tubular Frame	136	Q1-1-1
GP-004945-01	Tubular Frame	136	Q1-1-1
GP-005006-00	THREAD ANGLE "D" L=820 UH1504D	102	J-1-5
GP-005007-00	TOP SHAFT COVER B-1 UH1504D	127	N-3-7
GP-005008-00	TOP SHAFT COVER B-2 UH1504D	127	N-3-8
GP-005008-01	TOP SHAFT COVER B-2 UH1504D	127	N-3-8
GP-005021-00	Bracket For X-Y Connecting	59	H1-3-4
GP-005021-00	Bracket For X-Y Connecting	67	H2-3-4
GP-005021-00	Bracket For X-Y Connecting	75	H3-3-4
GP-005022-00	Y-Lm Support Fixing Plate(A)	57	H1-1-56
GP-005026-00	Upper Shaft Cover (A) UH1504D	128	N-4-15

Part No.	Part Name	Page	Ref.No
GP-005027-00	Switch Base UH1504D	126	N-2-16
GP-005043-00	UPPER THREAD HOOK DRIVING SHAF UH1208D	47	F-2-20
GP-005047-00	Tubular Frame Rail Plate	62	H1-6-3
GP-005058-00	FIXED TABLE "C"	110	K-6-7
GP-005058-01	FIXED TABLE "C"	110	K-6-7
GP-005059-00	FIXED TABLE "D"	110	K-6-8
GP-005061-00	SPOOL PLATE L=2480 UH1512D	101	J-1-1
GP-005065-00	Oil Tank Cover (L) UH1512D	24	C-4-9
GP-005070-00	X-Lm Guide Frame	87	H4-6-1
GP-005070-01	X-Lm Guide Frame	87	H4-6-1
GP-005071-00	X-FRAME SUPPORT BAR	87	H4-6-20
GP-005071-01	X-FRAME SUPPORT BAR	87	H4-6-20
GP-005071-02	X-FRAME SUPPORT BAR	87	H4-6-20
GP-005072-00	TOP SHAFT A [1197.7mm] UH1512D	35	E-3-19
GP-005074-00	TOP SHAFT B [1500mm] UH1512D	41	E1-3-19
GP-005075-00	TOP SHAFT C [1309mm] UH1512D	35	E-3-20
GP-005075-00	TOP SHAFT C [1309mm] UH1512D	41	E1-3-20
GP-005076-00	Upper Thread Driving Shaft B(L=2295)UH1512D	97	I1-1-41
GP-005077-00	LOW SHAFT B [1302.5mm] UH1512D	40	E1-2-17
GP-005078-00	Y-Driving Shaft UH1512D	83	H4-2-11
GP-005078-01	Y-Driving Shaft UH1512D	83	H4-2-11
GP-005089-00	UPPER THREAD DRIVING SHAFT UH912D	47	F-2-20
GP-005089-01	UPPER THREAD DRIVING SHAFT UH912D	47	F-2-20
GP-005104-00	X-Frame Side Cover Holder (L)	62	H1-6-13
GP-005104-00	X-FRAME SIDE COVER HOLDER (L)	70	H2-6-7
GP-005104-00	X-Frame Side Cover Holder (L)	78	H3-6-7
GP-005104-00	X-Frame Side Cover Holder (L)	87	H4-6-7
GP-005105-00	X-Frame Side Cover Holder (R)	62	H1-6-14
GP-005105-00	X-FRAME SIDE COVER HOLDER (R)	70	H2-6-8
GP-005105-00	X-Frame Side Cover Holder (R)	78	H3-6-11
GP-005105-00	X-Frame Side Cover Holder (R)	87	H4-6-8
GP-005106-00	X-FRAME SIDE COVER L	62	H1-6-10
GP-005106-00	X-AXIS FRAME SIDE COVER (L)	70	H2-6-12
GP-005106-00	X-FRAME SIDE COVER L	78	H3-6-15
GP-005106-00	X-Axis Frame Side Cover (L)	87	H4-6-12
GP-005107-00	X-FRAME SIDE COVER R	62	H1-6-11
GP-005107-00	X-AXIS FRAME SIDE COVER (R)	70	H2-6-13
GP-005107-00	X-FRAME SIDE COVER R	78	H3-6-16
GP-005107-00	X-Axis Frame Side Cover (R)	87	H4-6-13
GP-005108-00	X-Frame Support Bar Cover L	78	H3-6-25
GP-005109-00	X-Frame Support Bar Cover R	78	H3-6-26
GP-005174-00	MOVABLE TABLE "A"	110	K-6-1
GP-005175-00	MOVABLE TABLE "B"	110	K-6-2
GP-005176-00	MOVABLE TABLE "C"	110	K-6-3
GP-005177-00	MOVABLE TABLE "D"	110	K-6-4
GP-005184-00	SENSOR SENSING ADJUSTING RING	90	I-1-8
GP-005184-00	SENSOR SENSING ADJUSTING RING	96	I1-1-8
GP-005184-01	SENSOR SENSING ADJUSTING RING	90	I-1-8
GP-005184-01	SENSOR SENSING ADJUSTING RING	96	I1-1-8
GP-005355-00	Bed "A"	12	A-2-1
GP-005357-00	Needle Plate Bracket	30	D-4-22
GP-005357-01	Needle Plate Bracket	30	D-4-22
GP-005357-02	Needle Plate Bracket	30	D-4-22

Part No.	Part Name	Page	Ref.No
GP-005358-00	Rotary Hook Support	94	I-4-4
GP-005358-01	Rotary Hook Support	94	I-4-4
GP-005359-00	Bed Cover	94	I-4-6
GP-005359-01	Bed Cover	94	I-4-6
GP-005359-02	Bed Cover	94	I-4-6
GP-005360-00	Hook Cover	94	I-4-8
GP-005360-01	Hook Cover	94	I-4-8
GP-005360-02	Hook Cover	94	I-4-8
GP-005361-00	Hook Cover Insert	94	I-4-9
GP-005362-00	Hook Cover Holder	94	I-4-20
GP-005366-00	Picker Bracket	94	I-4-17
GP-005368-00	Picker	94	I-4-13
GP-005369-00	Picker Stopper	94	I-4-21
GP-005369-01	Picker Stopper	94	I-4-21
GP-005374-00	Y-Driving Box CoverA	66	H2-2-33
GP-005374-00	Y-Driving Box CoverA	74	H3-2-33
GP-005378-00	Idler Bush	66	H2-2-25
GP-005378-00	Idler Bush	74	H3-2-25
GP-005379-00	Tension Adjusting Roller	66	H2-2-23
GP-005379-00	Tension Adjusting Roller	74	H3-2-23
GP-005380-00	Coupling	66	H2-2-21
GP-005380-00	Coupling	74	H3-2-21
GP-005688-00	BODY INSIDE COVER C	133	P-1-21
GP-005688-01	BODY INSIDE COVER C	133	P-1-21
GP-005982-00	CABLE COVER FOR OP SUPPORT	133	P-1-26
GP-006119-00	PRESSER FOOT (L)	45	F-1-19
GP-006252-00	Cam Bushing	49	F-3-9
GP-006638-00	Moving Mes Shaft	30	D-4-8
GP-007144-00	Y-Bearing Bracket (R)	65	H2-1-43
GP-007144-00	Y-Bearing Bracket (R)	73	H3-1-43
GP-007145-00	Y-Bearing Bracket (L)	65	H2-1-44
GP-007145-00	Y-Bearing Bracket (L)	73	H3-1-44
GP-007148-00	Y-Driving Shaft "A"	83	H4-2-15
GP-007216-00	Needle Bar Return Spring	45	F-1-23
GP-007216-01	Needle Bar Return Spring	45	F-1-23
GP-007248-00	ARM TOP COVER	21	C-1-5
GP-007360-00	Head (9C)	45	F-1-1
GP-007360-01	Head (9C)	45	F-1-1
GP-007360-02	Head (9C)	45	F-1-1
GP-007360-03	Head (9C)	45	F-1-1
GP-007361-00	Head (12C)	45	F-1-1
GP-007361-01	Head (12C)	45	F-1-1
GP-007361-02	Head (12C)	45	F-1-1
GP-007361-03	Head (12C)	45	F-1-1
GP-007362-00	Head (12C)	45	F-1-1
GP-007362-01	Head (15C)	45	F-1-1
GP-007362-02	Head (15C)	45	F-1-1
GP-007362-03	Head (15C)	45	F-1-1
GP-007476-00	Noise Filter	115	L-2-7
GP-007511-00	Y-Driving Box	66	H2-2-5
GP-007511-00	Y-Driving Box	74	H3-2-5

R. Index

Part No.	Part Name	Page	Ref.No
18153SC-3123	Truss Screw (M4*L12)	130	O-1-7
18153SC-3123	Truss Screw (M4*L12)	131	O-2-2
18153SC-3123	Plus Screw (M4*L10)	138	Q1-3-13
18153SC-3123	Plus Screw (M4*L10)	146	Q3-3-15
18153SC-3123	Plus Screw (M4*L10)	150	Q4-3-15
18154SC-9134	PLUS SCREW (M3*L8)	114	L-1-20
19002SC-1330	TAPPING SCREW (4*L16-NO1)	107	K-4-21
20007BM-A001	Lamp Ass-Y "A"	125	N-1-12
20009EL-B001	LAMP (32W)	125	N-1-20
20009EL-WH09	Wheel Sensor Board 9C	53	G-2-7
20014ET-A001	Lamp Socket	125	N-1-14
20014SC-9124	Hex. Socket Screw(M4*L8)	125	N-1-13
20038PR-T121	WASHER (@8)	125	N-1-11
20042SC-9134	PLUS SCREW (M4*L6)	115	L-2-8
22002CW-UK01	Screw Bush "A"	136	Q1-1-2
22002CW-UK01	Screw Bush "A"	144	Q3-1-2
22002CW-UK01	Screw Bush "A"	148	Q4-1-2
22003CW-UK01	Location Block	136	Q1-1-3
22003CW-UK01	Location Block	144	Q3-1-3
22003CW-UK01	Location Block	148	Q4-1-3
22003PM-T121	Clip Bracket (L)	136	Q1-1-19
22003PM-T121	Clip Bracket (L)	140	Q2-1-9
22003PM-T121	Clip Bracket (L)	144	Q3-1-14
22003PM-T121	Clip Bracket (R)	148	Q4-1-24
22004PM-T121	Clip Bracket (R)	136	Q1-1-13
22004PM-T121	Clip Bracket (R)	140	Q2-1-8
22004PM-T121	Clip Bracket (R)	144	Q3-1-12
22004PM-T121	Clip Bracket (R)	148	Q4-1-14
22004PM-T121	Clip Bracket (R)	148	Q4-1-23
22005PR-T121	Clip	136	Q1-1-12
22005PR-T121	Clip	140	Q2-1-7
22005PR-T121	Clip	144	Q3-1-11
22005PR-T121	Clip	148	Q4-1-13
22005PR-T121	Clip	148	Q4-1-22
22006SC-7113	Hex.Scoket Bolt (M3*L8)	23	C-3-20
22006SC-7113	Hex. Socket Bolt (M3*L8)	59	H1-3-9
22006SC-7113	Hex. Socket Bolt (M3*L8)	61	H1-5-2
22006SC-7113	Hex. Socket Bolt (M3*L8)	61	H1-5-4
22006SC-7113	Hex. Socket Bolt (M3*L8)	67	H2-3-9
22006SC-7113	Hex. Socket Bolt (M3*L8)	69	H2-5-2
22006SC-7113	Hex. Socket Bolt (M3*L8)	75	H3-3-9
22006SC-7113	Hex. Socket Bolt (M3*L8)	77	H3-5-3
22006SC-7113	Hex. Socket Bolt (M3*L8)	84	H4-3-9
22006SC-7113	Hex. Socket Bolt (M3*L8)	86	H4-5-3
22006SC-7113	Hex. Socket Bolt (M3*L8)	88	H4-6-35
22006SC-7113	Hex. Socket Bolt (M3*L8)	140	Q2-1-10
22007BR-UK01	Bearing Pin	136	Q1-1-7
22007BR-UK01	Bearing Pin	144	Q3-1-7
22007BR-UK01	Bearing Pin	148	Q4-1-7
22009BR-UK01	Needle Bearing (Taf51010)	136	Q1-1-8
22009BR-UK01	Needle Bearing (Taf51010)	144	Q3-1-8
22009BR-UK01	Needle Bearing (Taf51010)	148	Q4-1-8
22010PM-UK01	Tubular Frame Fixing Screw	146	Q3-3-16

Part No.	Part Name	Page	Ref.No
22017BM-UH16	Sqaure Frame (312*312) Ass'Y	141	Q2-2-10
22017BM-UH16	Sqaure Frame (312*312) Ass'Y	141	Q2-2-15
22038BM-UK01	Tubular Set	137	Q1-2-1
22038PM-UK01	Tubular (Inner) 45*44	137	Q1-2-2
22043PM-UK01	Tubular (Outer) 45*44	137	Q1-2-6
22044CW-UK01	Adjusting Bolt	137	Q1-2-7
22044CW-UK01	Adjusting Bolt	141	Q2-2-6
22044CW-UK01	Adjusting Bolt	141	Q2-2-16
22044CW-UK01	Adjusting Bolt	145	Q3-2-6
22044CW-UK01	Adjusting Bolt	149	Q4-2-6
22044CW-UK01	Adjusting Bolt	149	Q4-2-13
22045CW-UK01	Adjusting Bolt Guide	137	Q1-2-8
22045CW-UK01	Adjusting Bolt Guide	141	Q2-2-7
22045CW-UK01	Adjusting Bolt Guide	145	Q3-2-7
22045CW-UK01	Adjusting Bolt Guide	149	Q4-2-7
22046CW-UK01	Adjusting Nut	137	Q1-2-9
22046CW-UK01	Adjusting Nut	141	Q2-2-8
22046CW-UK01	Adjusting Nut	145	Q3-2-8
22046CW-UK01	Adjusting Nut	149	Q4-2-8
23019EL-A001	CODE Push (6NR-16)	79	H3-6-59
24004PR-UK01	Connecting Plate "F"	138	Q1-3-4
24004PR-UK01	Connecting Plate "F"	142	Q2-3-9
24004PR-UK01	Connecting Plate "F"	146	Q3-3-6
24004PR-UK01	Connecting Plate "F"	150	Q4-3-4
24004PR-UK02	Connecting Plate "E"	138	Q1-3-6
24004PR-UK02	Connecting Plate "E"	142	Q2-3-19
24007AD-UK01	Border Frame Sash L=575	138	Q1-3-3
24007AD-UK01	Border Frame Sash L=575	142	Q2-3-8
24007AD-UK01	Border Frame Sash L=575	146	Q3-3-3
24007AD-UK01	Border Frame Sash L=575	150	Q4-3-3
24008PR-UK02	Square Frame Fixiing Plate A	138	Q1-3-10
24008PR-UK02	Square Frame Fixing Plate A	142	Q2-3-20
24008PR-UK02	Square Frame Fixiing Plate A	146	Q3-3-10
24008PR-UK02	Square Frame Fixing Plate A	150	Q4-3-11
24011PR-T121	Connecting Plate "C"	138	Q1-3-7
24011PR-T121	Connecting Plate "C"	142	Q2-3-10
24011PR-T121	Connecting Plate "C"	146	Q3-3-8
24011PR-T121	Connecting Plate "C"	150	Q4-3-8
24011PR-UK02	Square Frame Fixiing Plate B	138	Q1-3-11
24011PR-UK02	Square Frame Fixing Plate B	142	Q2-3-21
24011PR-UK02	Square Frame Fixiing Plate B	146	Q3-3-12
24011PR-UK02	Square Frame Fixing Plate B	150	Q4-3-12
24016SF-T121	Felt	138	Q1-3-9
24016SF-T121	Felt	142	Q2-3-12
24016SF-T121	Felt	146	Q3-3-17
24016SF-T121	Felt	150	Q4-3-10
25009EL-UK06	Cable (25-09)	85	H4-4-33
25009EL-UK06	Cable (25-09)	88	H4-6-49
25013EL-UK02	X-Step Motor Driving Power 3	60	H1-4-35
25014EL-UK01	Cable (4Ht-14)	76	H3-4-35
25019EL-T121	Power Cable 2 (1Ht-19)	60	H1-4-36
25019EL-T121	Power Cable 2 (1Ht-19)	79	H3-6-52
25023EL-UK06	Cable (25-23)	29	D-3-18

Part No.	Part Name	Page	Ref.No
25029EL-UK01	C/C Motor Cable (2Ht-28)	50	F-4-15
25031EL-UK01	TO JOINT B/D CABLE (4HT-31)	126	N-2-13
25032EL-UK01	START STOP SWITCH (4HT-32)	126	N-2-12
25035EL-UK01	Cc Poten. Meter To J/B(4Ht-35) (UK1202)(UK1204)	50	F-4-13
25036EL-UK01	Cc Potentiometer Cable(4Ht-36)(UK1206)(UH1506C)	50	F-4-14
25037EL-UK01	Half Turn Cable (2Ht-36)	49	F-3-19
25038EL-UK06	Cable (25-38)	79	H3-6-53
25038EL-UK06	Cable (25-38)	88	H4-6-50
25039EL-UK06	Cable (25-39)	29	D-3-17
25040EL-T121	X-Original In Con. (1Ht-40)	61	H1-5-25
25041EL-UK01	X Original In (4Ht-41)	61	H1-5-26
25041EL-UK01	X Original In (4Ht-41)	79	H3-6-54
25041EL-UK01	X Original In (4Ht-41)	88	H4-6-51
25046EL-UK02	X-Original In Sensor (White)	61	H1-5-23
25047EL-UK02	X-Original In Sensor (Black)	61	H1-5-24
25052EL-UK01	LAST-SENSOR (BLACK) 4HT-52	70	H2-6-22
25052EL-UK01	LAST-SENSOR (BLACK) 4HT-52	79	H3-6-50
25052EL-UK01	Last-Sensor (Black) 4Ht-52	87	H4-6-15
25053EL-UK01	LAST-SENSOR (WHITE) 4HT-53	79	H3-6-51
25053EL-UK01	Last-Sensor (White) 4Ht-53	87	H4-6-16
25105ET-B001	Encoder Connector	24	C-4-13
25126EL-B001	Sensor Board To Wheel Earth	54	G-3-10
26006MC-8118	Stopper Screw (M2.6*L6)	17	B-4-13
28021SC-3123	Truss Screw (M3*L4)	12	A-2-16
29001EL-A001	MAIN POWER S/W (ABE53BF-30A)	115	L-2-15
32003ET-T121	Wick	15	B-2-2
32003ET-T121	Wick	17	B-4-18
32003ET-T121	Wick	17	B-4-20
32004PR-UK01	Lamp Socket Fixed Plate	125	N-1-15
32016PR-UH36	RECFLECTING COVER	125	N-1-17
32021SP-T121	Needle Bar Hose Holder "B"	12	A-2-15
32025PR-UK01	Lamp Structure B	125	N-1-18
32040PR-T121	Bed Felt Cover	12	A-2-8
32043SF-T121	Front Bushing Felt	12	A-2-21
32045CW-T121	Oil Hose Pin	12	A-2-6
32046SP-T121	Holder For Oil Hose	12	A-2-14
32046SP-T121	HOLDER FOR OIL HOSE	14	B-1-8
32047RB-T121	Oil Rubber Cap	30	D-4-28
AS-000476-00	Tension Unit	52	G-1-19
AS-000476-01	Tension Unit	52	G-1-19
AS-000858-00	UPPER THREAD HOLDING SET	22	C-2-4
AS-001429-00	Picker Base Ass'Y	94	I-4-12
AS-001429-01	Picker Base Ass'Y	94	I-4-12
AS-001429-02	Picker Base Ass'Y	94	I-4-12
AS-002145-00	ARM SIDE COVER ASS'Y	17	B-4-1
AS-002145-01	ARM SIDE COVER ASS'Y	17	B-4-1
AS-002145-02	ARM SIDE COVER ASS'Y	17	B-4-1
AS-002145-03	ARM SIDE COVER ASS'Y	17	B-4-1
AS-002856-00	Y-Frame Assy (UH1506D)	57	H1-1-57
AS-002867-00	Y-Driving Box Assy	66	H2-2-34
AS-003154-00	PICKER SOLENOID	94	I-4-22
AS-003154-01	PICKER SOLENOID	94	I-4-22
AS-003447-00	Needle Bar Reciprocator A'ssy	17	B-4-6

R. Index

Part No.	Part Name	Page	Ref.No
AS-003951-00	Thread Control Device Ass'y	130	O-1-11
AS-004640-00	Color Change Motor Assy	49	F-3-26
BD-000144-00	XY Driver Board(220V)//BD-000146-00(110V)	120	M-1-3
BD-000232-00	Thread Sensing Board	113	L-1-17
BD-000232-01	Thread Sensing Board	113	L-1-17
BD-000232-02	Thread Sensing Board	113	L-1-17
BD-000232-03	Thread Sensing Board	113	L-1-17
BD-000232-04	Thread Sensing Board	113	L-1-17
BD-000232-05	Thread Sensing Board	113	L-1-17
BD-000232-06	Thread Sensing Board	113	L-1-17
BD-000232-07	Thread Sensing Board	113	L-1-17
BD-000232-08	Thread Sensing Board	113	L-1-17
BD-000232-09	Thread Sensing Board	113	L-1-17
BD-000232-10	Thread Sensing Board	113	L-1-17
BD-000232-11	Thread Sensing Board	114	L-1-17
BD-000232-12	Thread Sensing Board	114	L-1-18
BD-000232-13	Thread Sensing Board	114	L-1-18
BD-000232-14	Thread Sensing Board	114	L-1-19
BD-000306-00	IO MC Board	120	M-1-8
BD-000306-00	Back plane Board	122	M-2-2
BD-000307-00	DDC Board	120	M-1-16
BD-000308-00	UNIT Board	120	M-1-26
BD-000310-00	Color Change Board	113	L-1-15
BD-000310-01	Color Change Board	113	L-1-15
BD-000310-02	Color Change Board	113	L-1-15
BD-000310-03	Color Change Board	113	L-1-15
BD-000310-04	Color Change Board	113	L-1-15
BD-000310-05	Color Change Board	113	L-1-15
BD-000310-06	Color Change Board	113	L-1-15
BD-000310-07	Color Change Board	113	L-1-15
BD-000310-08	Color Change Board	113	L-1-15
BD-000310-09	Color Change Board	113	L-1-15
BD-000310-10	Color Change Board	113	L-1-15
BD-000311-00	Main Drive (ASSY)(220V)//BD-000312-00(110V)	120	M-1-1
BD-000343-00	IO LED Board	120	M-1-9
BD-000378-00	LAMP Board	121	M-1-37
BD-000383-00	DDC LED Board	120	M-1-17
BE-000023-00	Y-Driving Timing Belt	66	H2-2-18
BE-000023-00	Y-Driving Timing Belt	74	H3-2-18
CA-001730-00	EMEGUNCY S/W CABLE	126	N-2-14
CA-002982-00	Encoder Cable UH1204D	37	E-5-20
CA-002983-00	Encoder Cable UH1202D	43	E1-5-19
CA-002983-00	Encoder Cable UH1204D	43	E1-5-19
CA-002984-00	Encoder Cable UH1206D	37	E-5-20
CA-002985-00	Encoder Cable UH1206D	43	E1-5-19
CA-002986-00	Encoder Cable UH1202D	37	E-5-20
CA-002987-00	Encoder Cable UH1208D	37	E-5-20
CA-002988-00	Encoder Cable UH1208D	43	E1-5-19
EP-000029-00	SMPS	120	M-1-23
EP-000078-00	Transformer A'ssy	130	O-1-6
EP-000079-00	On / Off Switch	131	O-2-3
EP-000080-00	Push Switch (Start)	131	O-2-8
EP-000081-00	Push Switch (Stop)	131	O-2-9

Part No.	Part Name	Page	Ref.No
EP-000082-00	Switch (Select)	131	O-2-5
EP-000083-00	VR	131	O-2-7
EP-000095-00	PCB (DW-BW01)	130	O-1-8
EP-000140-00	Color Change Motor	50	F-4-1
EP-000141-00	Upper Thread Hook Motor Unit	90	I-1-1
EP-000141-00	Upper Thread Hook Motor Unit	96	I1-1-1
EP-000142-00	MAGNETIC SWITCH SET	115	L-2-9
EP-000149-00	Wiper Motor Driver	121	M-1-38
EP-000157-00	EMERGENCY SWITCH SET	126	N-2-11
GP-003757-00	Y-LM Guide Cover D	107	K-4-11
GP-004110-00	BODY FRONT COVER D	133	P-1-11
GP-004111-00	BODY FRONT COVER E	133	P-1-12
GP-004115-00	TABLE SUPPORT (C)	133	P-1-17
GP-004116-00	MOVABLE TABLE "A"	108	K-5-1
GP-004117-00	MOVABLE TABLE "B"	108	K-5-2
GP-004117-01	MOVABLE TABLE "B"	108	K-5-2
GP-004117-02	MOVABLE TABLE "B"	108	K-5-2
GP-004118-00	MOVABLE TABLE "C"	108	K-5-3
GP-004119-00	FIXED TABLE "A"	108	K-5-4
GP-004119-00	FIXED TABLE "A"	110	K-6-5
GP-004119-01	FIXED TABLE "A"	108	K-5-4
GP-004119-01	FIXED TABLE "A"	110	K-6-5
GP-004120-00	FIXED TABLE "C"	108	K-5-6
GP-004120-00	FIXED TABLE "C"	108	K-5-10
GP-004120-01	FIXED TABLE "C"	108	K-5-6
GP-004120-01	FIXED TABLE "C"	108	K-5-10
GP-004121-00	FIXED TABLE "D"	108	K-5-7
GP-004121-00	FIXED TABLE "E"	110	K-6-9
GP-004121-01	FIXED TABLE "D"	108	K-5-7
GP-004121-01	FIXED TABLE "E"	110	K-6-9
GP-004122-00	FIXED TABLE "F"	110	K-6-10
GP-004123-00	FIXED TABLE "H"	110	K-6-12
GP-004124-00	FIXED TABLE "I"	110	K-6-13
GP-004125-00	FIXED TABLE "J"	110	K-6-14
GP-004127-00	Y-LM Guide Cover A	108	K-5-16
GP-004127-00	Y-LM Guide Cover A	110	K-6-19
GP-004128-00	Y-LM Guide Cover B	110	K-6-21
GP-004128-01	Y-LM Guide Cover B	110	K-6-21
GP-004129-00	Y-LM Guide Cover C	108	K-5-18
GP-004129-00	Y-LM Guide Cover C	110	K-6-23
GP-004130-00	Y-LM Guide Cover D	108	K-5-20
GP-004130-00	Y-LM Guide Cover D	110	K-6-25
GP-004131-00	Y-LM Guide Cover E	108	K-5-22
GP-004131-00	Y-LM Guide Cover E	110	K-6-27
GP-004132-00	COUPLING COVER	108	K-5-24
GP-004132-00	COUPLING COVER B	110	K-6-30
GP-004134-00	SPOOL PLATE L=1680 UH1208D	101	J-1-1
GP-004135-00	THREAD ANGLE "A" L=1620 UH1208D	102	J-1-2
GP-004135-01	THREAD ANGLE "A" L=1620 UH1208D	102	J-1-2
GP-004136-00	THREAD ANGLE "B" L=1620 UH1208D	102	J-1-3
GP-004136-01	THREAD ANGLE "B" L=1620 UH1208D	102	J-1-3
GP-004137-00	THREAD ANGLE "C" L=1620 UH1208D	102	J-1-4
GP-004137-01	THREAD ANGLE "C" L=1620 UH1208D	102	J-1-4

Part No.	Part Name	Page	Ref.No
GP-004138-00	THREAD ANGLE "D" L=1620 UH1208D	102	J-1-5
GP-004138-01	THREAD ANGLE "D" L=1620 UH1208D	102	J-1-5
GP-004139-00	Rail Guide	31	D-5-1
GP-004142-00	X-FRAME(L=2135)	78	H3-6-1
GP-004142-01	X-FRAME(L=2135)	78	H3-6-1
GP-004142-02	X-FRAME(L=2135)	78	H3-6-1
GP-004143-00	X-LM RAIL "A" (THK SR15W- L580)	77	H3-5-1
GP-004144-00	LM Block Connecting Plate(L) (L=537)	77	H3-5-16
GP-004145-00	LM Block Connecting Plate(R) (L=537)	77	H3-5-20
GP-004146-00	X-FRAME COVER	78	H3-6-4
GP-004147-00	Cam Roller Guide Rail (L590)	59	H1-3-1
GP-004147-00	Cam Roller Guide Rail (L590)	84	H4-3-1
GP-004148-00	Y-LM Guide Frame L620	81	H4-1-1
GP-004148-01	Y-LM Guide Frame L620	81	H4-1-1
GP-004149-00	Bracket For X-Y Connecting	84	H4-3-4
GP-004149-01	Bracket For X-Y Connecting	84	H4-3-4
GP-004150-00	Y-LM Support Fixing Plate(A)	65	H2-1-56
GP-004150-00	Y-LM Support Fixing Plate(A)	73	H3-1-56
GP-004150-00	Bracket for Y-Sensor	82	H4-1-56
GP-004151-00	TOP SHAFT A [1897.5mm] UH1208D	35	E-3-19
GP-004152-00	TOP SHAFT B [2009.2mm] UH1208D	41	E1-3-19
GP-004153-00	LOW SHAFT A [1504mm] UH1208D	34	E-2-17
GP-004154-00	LOW SHAFT B [1702.5mm] UH1208D	40	E1-2-17
GP-004155-00	Mes Driving Shaft "A" L=1215.5 UH1208D	27	D-1-17
GP-004156-00	Upper Thread Driving Shaft A (L=1372) UH1208D	91	I-1-41
GP-004157-00	Upper Thread Driving Shaft B (L=1494) UH1208D	97	I1-1-41
GP-004159-00	Y-Driving Shaft UH1208D	66	H2-2-13
GP-004159-00	Y-Driving Shaft	74	H3-2-13
GP-004159-01	Y-Driving Shaft UH1208D	66	H2-2-13
GP-004159-01	Y-Driving Shaft UH1208D	74	H3-2-13
GP-004172-00	Tubular Frame	144	Q3-1-1
GP-004172-01	Tubular Frame	144	Q3-1-1
GP-004174-00	Front Border Frame Sash L=1744	146	Q3-3-1
GP-004175-00	Rear Border Frame Sash L=1744	146	Q3-3-2
GP-004272-00	X-FRAME SUPPORT BAR	78	H3-6-18
GP-004272-01	X-FRAME SUPPORT BAR	78	H3-6-18
GP-004896-00	FIXED TABLE "A"	106	K-3-2
GP-004896-01	FIXED TABLE "A"	106	K-3-2
GP-004897-00	FIXED TABLE "B"	106	K-3-3
GP-004897-01	FIXED TABLE "B"	106	K-3-3
GP-004898-00	FIXED TABLE "C"	106	K-3-4
GP-004898-00	FIXED TABLE "C"	107	K-4-6
GP-004898-01	FIXED TABLE "C"	106	K-3-4
GP-004898-01	FIXED TABLE "C"	107	K-4-6
GP-004899-00	FIXED TABLE "D"	106	K-3-5
GP-004899-01	FIXED TABLE "D"	106	K-3-5
GP-004900-00	FIXED TABLE "E"	106	K-3-6
GP-004900-01	FIXED TABLE "E"	106	K-3-6
GP-004901-00	MOVABLE TABLE	106	K-3-1
GP-004901-01	MOVABLE TABLE	106	K-3-1
GP-004902-00	MOVING TABLE FIXED PLATE B	104	K-1-2
GP-004903-00	Y-LM Guide Cover A	106	K-3-11
GP-004903-00	Y-LM GUIDE COVER A	107	K-4-8

R. Index

Part No.	Part Name	Page	Ref.No
AS-003951-00	Thread Control Device Ass'y	130	O-1-11
AS-004640-00	Color Change Motor Assy	49	F-3-26
BD-000144-00	XY Driver Board(220V)//BD-000146-00(110V)	120	M-1-3
BD-000232-00	Thread Sensing Board	113	L-1-17
BD-000232-01	Thread Sensing Board	113	L-1-17
BD-000232-02	Thread Sensing Board	113	L-1-17
BD-000232-03	Thread Sensing Board	113	L-1-17
BD-000232-04	Thread Sensing Board	113	L-1-17
BD-000232-05	Thread Sensing Board	113	L-1-17
BD-000232-06	Thread Sensing Board	113	L-1-17
BD-000232-07	Thread Sensing Board	113	L-1-17
BD-000232-08	Thread Sensing Board	113	L-1-17
BD-000232-09	Thread Sensing Board	113	L-1-17
BD-000232-10	Thread Sensing Board	113	L-1-17
BD-000232-11	Thread Sensing Board	114	L-1-17
BD-000232-12	Thread Sensing Board	114	L-1-18
BD-000232-13	Thread Sensing Board	114	L-1-18
BD-000232-14	Thread Sensing Board	114	L-1-19
BD-000306-00	IO MC Board	120	M-1-8
BD-000306-00	Back plane Board	122	M-2-2
BD-000307-00	DDC Board	120	M-1-16
BD-000308-00	UNIT Board	120	M-1-26
BD-000310-00	Color Change Board	113	L-1-15
BD-000310-01	Color Change Board	113	L-1-15
BD-000310-02	Color Change Board	113	L-1-15
BD-000310-03	Color Change Board	113	L-1-15
BD-000310-04	Color Change Board	113	L-1-15
BD-000310-05	Color Change Board	113	L-1-15
BD-000310-06	Color Change Board	113	L-1-15
BD-000310-07	Color Change Board	113	L-1-15
BD-000310-08	Color Change Board	113	L-1-15
BD-000310-09	Color Change Board	113	L-1-15
BD-000310-10	Color Change Board	113	L-1-15
BD-000310-11	Color Change Board	113	L-1-15
BD-000310-12	Color Change Board	113	L-1-15
BD-000310-13	Color Change Board	113	L-1-15
BD-000310-14	Color Change Board	113	L-1-15
BD-000311-00	Main Drive (ASSY)(220V)//BD-000312-00(110V)	120	M-1-1
BD-000343-00	IO LED Board	120	M-1-9
BD-000378-00	LAMP Board	121	M-1-37
BD-000383-00	DDC LED Board	120	M-1-17
BE-000023-00	Y-Driving Timing Belt	66	H2-2-18
BE-000023-00	Y-Driving Timing Belt	74	H3-2-18
CA-001730-00	EMEGUNCY S/W CABLE	126	N-2-14
CA-002982-00	Encoder Cable UH1204D	37	E-5-20
CA-002983-00	Encoder Cable UH1202D	43	E1-5-19
CA-002983-00	Encoder Cable UH1204D	43	E1-5-19
CA-002984-00	Encoder Cable UH1206D	37	E-5-20
CA-002985-00	Encoder Cable UH1206D	43	E1-5-19
CA-002986-00	Encoder Cable UH1202D	37	E-5-20
CA-002987-00	Encoder Cable UH1208D	37	E-5-20
CA-002988-00	Encoder Cable UH1208D	43	E1-5-19
EP-000029-00	SMPS	120	M-1-23

Part No.	Part Name	Page	Ref.No
EP-000078-00	Transformer A'ssy	130	O-1-6
EP-000079-00	On / Off Switch	131	O-2-3
EP-000080-00	Push Switch (Start)	131	O-2-8
EP-000081-00	Push Switch (Stop)	131	O-2-9
EP-000082-00	Switch (Select)	131	O-2-5
EP-000083-00	VR	131	O-2-7
EP-000095-00	PCB (DW-BW01)	130	O-1-8
EP-000140-00	Color Change Motor	50	F-4-1
EP-000141-00	Upper Thread Hook Motor Unit	90	I-1-1
EP-000141-00	Upper Thread Hook Motor Unit	96	I1-1-1
EP-000142-00	MAGNETIC SWITCH SET	115	L-2-9
EP-000149-00	Wiper Motor Driver	121	M-1-38
EP-000157-00	EMERGENCY SWITCH SET	126	N-2-11
GP-003757-00	Y-LM Guide Cover D	107	K-4-11
GP-004110-00	BODY FRONT COVER D	133	P-1-11
GP-004111-00	BODY FRONT COVER E	133	P-1-12
GP-004115-00	TABLE SUPPORT (C)	133	P-1-17
GP-004116-00	MOVABLE TABLE "A"	108	K-5-1
GP-004117-00	MOVABLE TABLE "B"	108	K-5-2
GP-004117-01	MOVABLE TABLE "B"	108	K-5-2
GP-004117-02	MOVABLE TABLE "B"	108	K-5-2
GP-004118-00	MOVABLE TABLE "C"	108	K-5-3
GP-004119-00	FIXED TABLE "A"	108	K-5-4
GP-004119-00	FIXED TABLE "A"	110	K-6-5
GP-004119-01	FIXED TABLE "A"	108	K-5-4
GP-004119-01	FIXED TABLE "A"	110	K-6-5
GP-004120-00	FIXED TABLE "C"	108	K-5-6
GP-004120-00	FIXED TABLE "C"	108	K-5-10
GP-004120-01	FIXED TABLE "C"	108	K-5-6
GP-004120-01	FIXED TABLE "C"	108	K-5-10
GP-004121-00	FIXED TABLE "D"	108	K-5-7
GP-004121-00	FIXED TABLE "E"	110	K-6-9
GP-004121-01	FIXED TABLE "D"	108	K-5-7
GP-004121-01	FIXED TABLE "E"	110	K-6-9
GP-004122-00	FIXED TABLE "F"	110	K-6-10
GP-004123-00	FIXED TABLE "H"	110	K-6-12
GP-004124-00	FIXED TABLE "I"	110	K-6-13
GP-004125-00	FIXED TABLE "J"	110	K-6-14
GP-004127-00	Y-LM Guide Cover A	108	K-5-16
GP-004127-00	Y-LM Guide Cover A	110	K-6-19
GP-004128-00	Y-LM Guide Cover B	110	K-6-21
GP-004128-01	Y-LM Guide Cover B	110	K-6-21
GP-004129-00	Y-LM Guide Cover C	108	K-5-18
GP-004129-00	Y-LM Guide Cover C	110	K-6-23
GP-004130-00	Y-LM Guide Cover D	108	K-5-20
GP-004130-00	Y-LM Guide Cover D	110	K-6-25
GP-004131-00	Y-LM Guide Cover E	108	K-5-22
GP-004131-00	Y-LM Guide Cover E	110	K-6-27
GP-004132-00	COUPLING COVER	108	K-5-24
GP-004132-00	COUPLING COVER B	110	K-6-30
GP-004134-00	SPOOL PLATE L=1680 UH1208D	101	J-1-1
GP-004135-00	THREAD ANGLE "A" L=1620 UH1208D	102	J-1-2
GP-004135-01	THREAD ANGLE "A" L=1620 UH1208D	102	J-1-2

Part No.	Part Name	Page	Ref.No
GP-004136-00	THREAD ANGLE "B" L=1620 UH1208D	102	J-1-3
GP-004136-01	THREAD ANGLE "B" L=1620 UH1208D	102	J-1-3
GP-004137-00	THREAD ANGLE "C" L=1620 UH1208D	102	J-1-4
GP-004137-01	THREAD ANGLE "C" L=1620 UH1208D	102	J-1-4
GP-004138-00	THREAD ANGLE "D" L=1620 UH1208D	102	J-1-5
GP-004138-01	THREAD ANGLE "D" L=1620 UH1208D	102	J-1-5
GP-004139-00	Rail Guide	31	D-5-1
GP-004142-00	X-FRAME(L=2135)	78	H3-6-1
GP-004142-01	X-FRAME(L=2135)	78	H3-6-1
GP-004142-02	X-FRAME(L=2135)	78	H3-6-1
GP-004143-00	X-LM RAIL "A" (THK SR15W- L580)	77	H3-5-1
GP-004144-00	LM Block Connecting Plate(L) (L=537)	77	H3-5-16
GP-004145-00	LM Block Connecting Plate(R) (L=537)	77	H3-5-20
GP-004146-00	X-FRAME COVER	78	H3-6-4
GP-004147-00	Cam Roller Guide Rail (L590)	59	H1-3-1
GP-004147-00	Cam Roller Guide Rail (L590)	84	H4-3-1
GP-004148-00	Y-LM Guide Frame L620	81	H4-1-1
GP-004148-01	Y-LM Guide Frame L620	81	H4-1-1
GP-004149-00	Bracket For X-Y Connecting	84	H4-3-4
GP-004149-01	Bracket For X-Y Connecting	84	H4-3-4
GP-004150-00	Y-LM Support Fixing Plate(A)	65	H2-1-56
GP-004150-00	Y-LM Support Fixing Plate(A)	73	H3-1-56
GP-004150-00	Bracket for Y-Sensor	82	H4-1-56
GP-004151-00	TOP SHAFT A [1897.5mm] UH1208D	35	E-3-19
GP-004152-00	TOP SHAFT B [2009.2mm] UH1208D	41	E1-3-19
GP-004153-00	LOW SHAFT A [1504mm] UH1208D	34	E-2-17
GP-004154-00	LOW SHAFT B [1702.5mm] UH1208D	40	E1-2-17
GP-004155-00	Mes Driving Shaft "A" L=1215.5 UH1208D	27	D-1-17
GP-004156-00	Upper Thread Driving Shaft A (L=1372) UH1208D	91	I-1-41
GP-004157-00	Upper Thread Driving Shaft B (L=1494) UH1208D	97	I1-1-41
GP-004159-00	Y-Driving Shaft UH1208D	66	H2-2-13
GP-004159-00	Y-Driving Shaft	74	H3-2-13
GP-004159-01	Y-Driving Shaft UH1208D	66	H2-2-13
GP-004159-01	Y-Driving Shaft UH1208D	74	H3-2-13
GP-004172-00	Tubular Frame	144	Q3-1-1
GP-004172-01	Tubular Frame	144	Q3-1-1
GP-004174-00	Front Border Frame Sash L=1744	146	Q3-3-1
GP-004175-00	Rear Border Frame Sash L=1744	146	Q3-3-2
GP-004272-00	X-FRAME SUPPORT BAR	78	H3-6-18
GP-004272-01	X-FRAME SUPPORT BAR	78	H3-6-18
GP-004896-00	FIXED TABLE "A"	106	K-3-2
GP-004896-01	FIXED TABLE "A"	106	K-3-2
GP-004897-00	FIXED TABLE "B"	106	K-3-3
GP-004897-01	FIXED TABLE "B"	106	K-3-3
GP-004898-00	FIXED TABLE "C"	106	K-3-4
GP-004898-00	FIXED TABLE "C"	107	K-4-6
GP-004898-01	FIXED TABLE "C"	106	K-3-4
GP-004898-01	FIXED TABLE "C"	107	K-4-6
GP-004899-00	FIXED TABLE "D"	106	K-3-5
GP-004899-01	FIXED TABLE "D"	106	K-3-5
GP-004900-00	FIXED TABLE "E"	106	K-3-6
GP-004900-01	FIXED TABLE "E"	106	K-3-6
GP-004901-00	MOVABLE TABLE	106	K-3-1

R. Index

Part No.	Part Name	Page	Ref.No
GP-004901-01	MOVABLE TABLE	106	K-3-1
GP-004902-00	MOVING TABLE FIXED PLATE B	104	K-1-2
GP-004903-00	Y-LM Guide Cover A	106	K-3-11
GP-004903-00	Y-LM GUIDE COVER A	107	K-4-8
GP-007512-00	Idler Shaft	66	H2-2-28
GP-007512-00	Idler Shaft	74	H3-2-28
GP-007512-01	Idler Shaft	66	H2-2-28
GP-007512-01	Idler Shaft	74	H3-2-28
GP-007513-00	Y-Driving Box Bracket	66	H2-2-29
GP-007513-00	Y-Driving Box Bracket	74	H3-2-29
GP-007514-00	Y-Driving Box Cover B	108	K-5-29
GP-007515-00	Y-Driving Box Driven Shaft	66	H2-2-19
GP-007515-00	Y-Driving Box Driven Shaft	74	H3-2-19
GP-007516-00	Y-Driving Shaft "B" UH1506D	66	H2-2-13
GP-007516-00	Y-Driving Shaft "B"	74	H3-2-13
GP-007517-00	Y-Driving Shaft "C" UH1506D	66	H2-2-12
GP-007517-00	Y-Driving Shaft "C"	74	H3-2-12
GP-007518-00	X-LM GUIDE FRAME L2635	70	H2-6-1
GP-007518-01	X-LM GUIDE FRAME L2635	70	H2-6-1
GP-007518-02	X-LM GUIDE FRAME L2635	70	H2-6-1
GP-007519-00	L/M Block Connecting Plate (L)	69	H2-5-9
GP-007520-00	Connecting Plate(R)	69	H2-5-7
GP-007523-00	X-Axis L/M Guide	69	H2-5-1
GP-007525-00	X-Cover	70	H2-6-4
GP-007526-00	Tubular Frame	140	Q2-1-1
GP-007532-00	FIXED TABLE "A"	107	K-4-1
GP-007532-01	FIXED TABLE "A"	107	K-4-1
GP-007532-02	FIXED TABLE "A"	107	K-4-1
GP-007533-00	FIXED TABLE "B"	107	K-4-2
GP-007533-01	FIXED TABLE "B"	107	K-4-2
GP-007534-00	FIXED TABLE "C"	107	K-4-3
GP-007534-01	FIXED TABLE "C"	107	K-4-3
GP-007534-02	FIXED TABLE "C"	107	K-4-3
GP-007535-00	FIXED TABLE "D"	107	K-4-4
GP-007535-00	Y-LM GUIDE COVER C	107	K-4-10
GP-007536-00	Y-LM GUIDE COVER B	107	K-4-9
GP-007537-00	COUPLING COVER	107	K-4-12
GP-007537-01	COUPLING COVER	107	K-4-12
GP-007852-00	BODY INSIDE COVER B	133	P-1-22
GP-007852-01	BODY INSIDE COVER B	133	P-1-22
GP-008540-00	Needle Bar Guide Rail (9C)	47	F-2-15
GP-008541-00	Needle Bar Guide Rail (12C)	47	F-2-15
GP-008542-00	Needle Bar Guide Rail (15C)	47	F-2-15
GP-008647-00	Operation Box Rotation Shaft	123	M-3-6
GP-008648-00	Operation Box Support Plate	123	M-3-11
GP-008651-00	Operation Box Base Block	123	M-3-13
GP-008651-01	Operation Box Base Block	123	M-3-13
GP-008769-00	Jump Driving Crank	23	C-3-9
GP-008769-01	Jump Driving Crank	23	C-3-9
GP-008788-00	Cable Cover A	125	N-1-1
GP-008789-00	Cable Cover B	125	N-1-2
GP-008789-01	Cable Cover B	125	N-1-2
GP-008790-00	BODY SIDE COVER	133	P-1-1

Part No.	Part Name	Page	Ref.No
GP-008793-00	Tubular Frame Rail Plate	70	H2-6-3
GP-008796-00	Perception Plate	69	H2-5-14
GP-008796-01	Perception Plate	69	H2-5-14
GP-008797-00	TABLE SUPPORT C	105	K-2-3
GP-008797-01	TABLE SUPPORT C	105	K-2-3
GP-008799-00	Table Support (R)	104	K-1-3
GP-008799-00	Table Support (R)	104	K-1-16
GP-008800-00	Table Support (L)	104	K-1-11
GP-008801-00	Rear Border Frame Sash L=1344	142	Q2-3-18
GP-008802-00	Front Border Frame Sash L=1344	142	Q2-3-7
GP-008893-00	BODY INSIDE COVER B	133	P-1-23
GP-008894-00	FIXED TABLE "B"	108	K-5-5
GP-008895-00	FIXED TABLE "H"	108	K-5-8
GP-008895-01	FIXED TABLE "H"	108	K-5-8
GP-008898-00	Y-LM GUIDE COVER C	108	K-5-25
GP-008899-00	Y-LM GUIDE COVER D	108	K-5-27
GP-008900-00	FIXED TABLE "I"	108	K-5-9
GP-009589-00	Oil Tank Ass'Y	14	B-1-1
GP-009590-00	Oil Tank Felt	14	B-1-2
GP-010074-00	LEVELING BASE ASS'Y	134	P-2-3
GP-010385-00	NEEDLE GUIDE PLATE(FLAT)	30	D-4-32
GP-010408-00	SCREW BUSH C	136	Q1-1-6
GP-010408-00	SCREW BUSH C	144	Q3-1-6
GP-010543-01	SMPS Fixing Stud (3-5-45)	120	M-1-27
GP-010695-00	TABLE SUPPORT B	105	K-2-7
GP-010695-01	TABLE SUPPORT B	105	K-2-7
GP-010770-00	Bracket For I/O s/w(A)	115	L-2-1
GP-011303-00	Color Change Cover	50	F-4-16
GP-011444-00	Mes Cam Driving Box (B)	27	D-1-1
GP-011445-00	Mes Cam Driving Box (A)	27	D-1-1
GP-011912-00	ARM SIDE COVER B	19	B-6-5
GP-011912-01	ARM SIDE COVER B	19	B-6-5
GP-011914-00	Take-Up Driving Lever "B"	15	B-2-8
GP-011915-00	Take-Up Lever Driving Cam	16	B-3-6
GP-011932-00	NEEDLE BAR DRIVING CAM	16	B-3-5
GP-011938-00	CAM BASE	16	B-3-1
GP-011938-01	CAM BASE	16	B-3-1
GP-011943-00	ARM	19	B-6-1
GP-012048-00	NEEDLE BAR DRIVING SHAFT BUSH	17	B-4-16
GP-012118-00	SMPS Radiator Sheet	120	M-1-25
GP-012800-00	Needle Plate Guide(L)	30	D-4-25
GP-012801-00	Needle Plate Guide(R)	30	D-4-26
GP-012897-00	MOTOR FIXING	37	E-5-5
GP-012897-00	MOTOR FIXING	43	E1-5-5
GP-013117-00	Needle Bar Driving Shaft	17	B-4-19
GP-013783-00	DDC Radiator	120	M-1-15
GP-013784-00	Driver Radiator	120	M-1-4
GP-014009-00	OP Support	123	M-3-2
GP-014009-01	OP Support	123	M-3-2
GP-014027-01	DDC Bracket	120	M-1-14
GP-014028-01	IO MC Bracket	120	M-1-13
GP-014029-01	SMPS Bracket	120	M-1-22
GP-014030-01	LAMP Bracket	120	M-1-36

Part No.	Part Name	Page	Ref.No
GP-014034,00	Front Cover (L)	121	M-1-41
GP-014036-00	Harness Cover	122	M-2-15
GP-014038-00	Side Cover	122	M-2-7
GP-014042-00	SMPS Fixture	120	M-1-29
GP-014047-00	Control Box	122	M-2-1
GP-014047-01	Connector PCB Cover	122	M-2-4
GP-014346-00	Rubber For Support Base	130	O-1-18
GP-014354-00	Bobbin Shaft	130	O-1-15
GP-014354-01	Bobbin Shaft	130	O-1-15
GP-014354-02	Bobbin Shaft	130	O-1-15
GP-014354-03	Bobbin Shaft	130	O-1-15
GP-014363-00	Spool Support Base	130	O-1-3
GP-014365-00	Spool Support Base Sponge	130	O-1-4
GP-014366-00	Spool Post	130	O-1-2
GP-014368-00	Antenna Bar	131	O-2-11
GP-014369-00	Antenna Bar Hanger	131	O-2-10
GP-014370-00	Tension Control Holder	130	O-1-10
GP-014548-00	DDC Sticker	121	M-1-46
GP-014549-00	IO MC Sticker	121	M-1-45
GP-014550-00	SMPS Sticker	121	M-1-47
GP-014677-00	VR Knob	131	O-2-6
GP-014678-00	Fuse Holder	131	O-2-4
GP-014783-00	Presser Foot Cam Boss	16	B-3-14
GP-014783-01	Presser Foot Cam Boss	16	B-3-14
GP-014783-02	Presser Foot Cam Boss	16	B-3-14
GP-014783-03	Presser Foot Cam Boss	16	B-3-14
GP-014783-04	Presser Foot Cam Boss	16	B-3-14
GP-014869-00	Cover	131	O-2-1
GP-014869-01	Cover	131	O-2-1
GP-014870-00	Base	130	O-1-1
GP-014871-00	Motor Bracket	130	O-1-14
GP-014939-00	Cam Spacer	16	B-3-11
GP-014993-00	BEAMBODY SET UH1506D-45	11	A-1-1
GP-014993-01	BEAMBODY SET UH1506D-45	11	A-1-1
GP-015085-00	UPPER THREAD HOOK SENSOR BASE	90	I-1-12
GP-015085-00	UPPER THREAD HOOK SENSOR BASE	96	I1-1-12
GP-015086-00	Motor Base	90	I-1-2
GP-015086-00	Motor Base	96	I1-1-2
GP-015653-00	SMPS Radiator	120	M-1-24
GP-015654-00	DDC Radiator Sheet	120	M-1-19
GP-016753-00	BODY INSIDE COVER A	133	P-1-19
GP-016756-00	BODY INSIDE COVER D	115	L-2-4
GP-016766-00	BEAMBODY SET UH1504D-45	11	A-1-1
GP-016766-01	BEAMBODY SET UH1504D-45	11	A-1-1
GP-016766-02	BEAMBODY SET UH1504D-45	11	A-1-1
GP-016767-00	BEAMBODY SET UH1208D-45	11	A-1-1
GP-016767-01	BEAMBODY SET UH1208D-45	11	A-1-1
GP-016768-00	BEAMBODY SET UH1512D-45	11	A-1-1
GP-016768-01	BEAMBODY SET UH1512D-45	11	A-1-1
GP-016768-02	BEAMBODY SET UH1512D-45	11	A-1-1
GP-016801-00	TOP SHAFT COVER B-1	127	N-3-7
GP-016802-00	TOP SHAFT COVER B-2	127	N-3-8
GP-016931-00	Hook Shaft Front Bushing	12	A-2-18

R. Index

Part No.	Part Name	Page	Ref.No
GP-016953-00	Hook Shaft Rear Bushing	12	A-2-17
GP-017159-00	XY 전류 셋팅 스티커	122	M-2-23
GP-017171-00	Rubber Base	122	M-2-6
GP-027117-00	PRESSER FOOT DRIVING CAM	16	B-3-10
GP-027117-01	PRESSER FOOT DRIVING CAM	16	B-3-10
GP-033547-00	Thread Guide (M)	47	F-2-5
GP-033548-00	Thread Guide (M) (12C)	47	F-2-5
GP-033549-00	Thread Guide (M) (15C)	47	F-2-5
GP-044367-00	Y-Driving Timming Pulley	66	H2-2-22
GP-044367-00	Y-Driving Timming Pulley	74	H3-2-22
GP-044367-01	Y-Driving Timming Pulley	66	H2-2-22
GP-044367-01	Y-Driving Timming Pulley	74	H3-2-22
GP-050887-00	Top Shaft Bracket "C"	25	C-5-1
HG-000001-00	Hook Cover Hinge	94	I-4-10
MO-000029-00	Motor Ass'y	130	O-1-13
SC-000173-00	Set Screw (M5*L4)	130	O-1-16
SC-000392-00	Control Box FAN Screw (M4xL30)	120	M-1-34
SC-000406-00	Front Cover (L) Screw (M4xL8)	121	M-1-42
SFAM-600-300	MAIN MOTOR	37	E-5-1
SFAM-600-300	MAIN MOTOR	43	E1-5-1
SWF-00000355	Operation Box (Set)	123	M-3-1
TTS-42-01	Y-ORIGIN IN Connecting Cable	57	H1-1-55
TTS-42-01	Y-ORIGIN IN Connecting Cable	65	H2-1-55
TTS-42-01	Y-ORIGIN IN Connecting Cable	73	H3-1-55
TTS-42-01	Y-ORIGIN IN Connecting Cable	82	H4-1-55
WS-000085-00	Washer for Picker Base	94	I-4-15
WS-000549-00	Stud Bolt Washer	90	I-1-17
WS-000549-00	Stud Bolt Washer	96	I1-1-17
WS-000549-01	Stud Bolt Washer	90	I-1-17
WS-000549-01	Stud Bolt Washer	96	I1-1-17

Part No.	Part Name	Page	Ref.No

Part No.	Part Name	Page	Ref.No