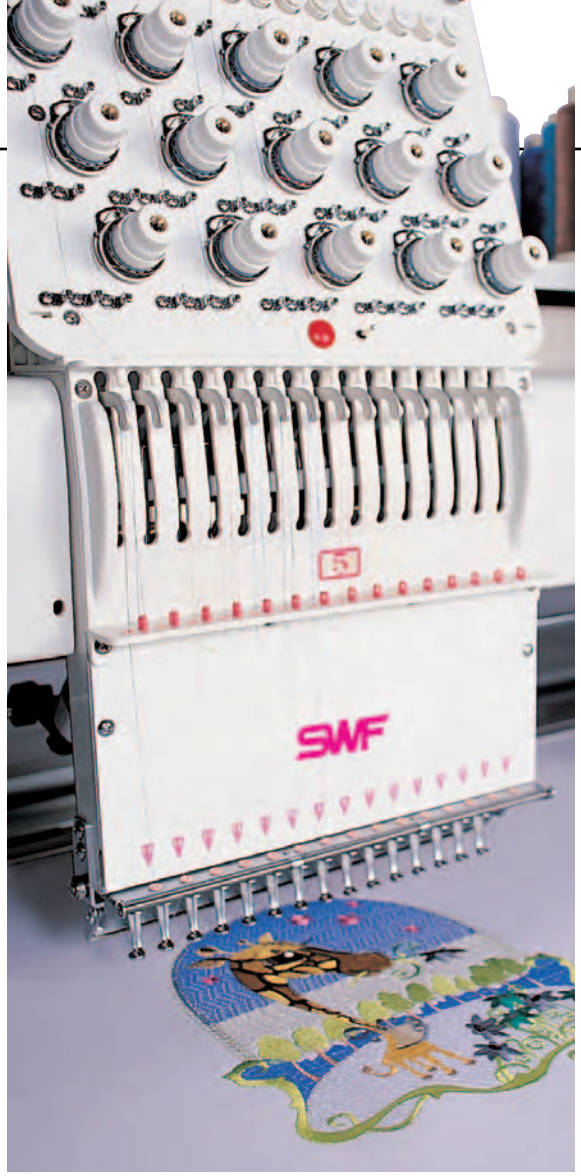

PARTS BOOK

SWF/E-Series

Tubular Automatic
Embroidery Machine

SWF

PME-080313

SUNSTAR PRECISION CO., LTD.

Machine Layout

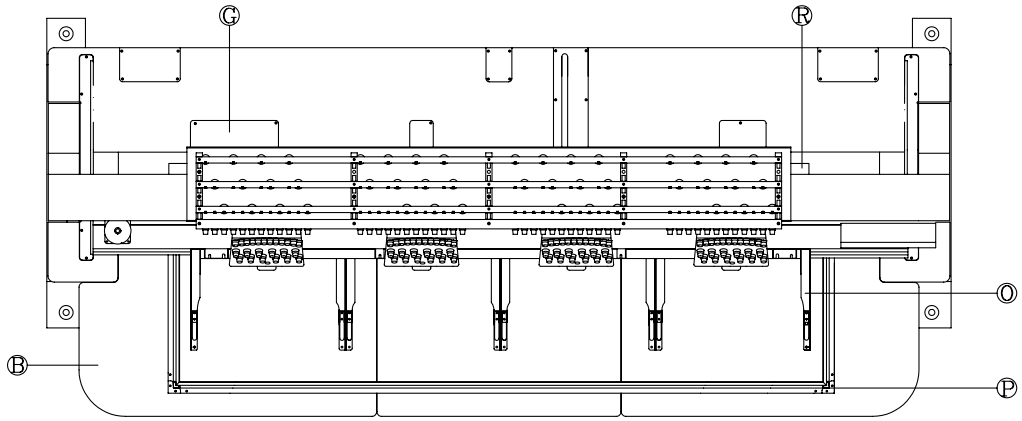

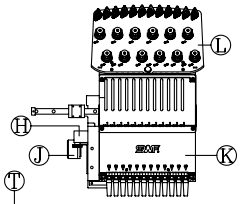

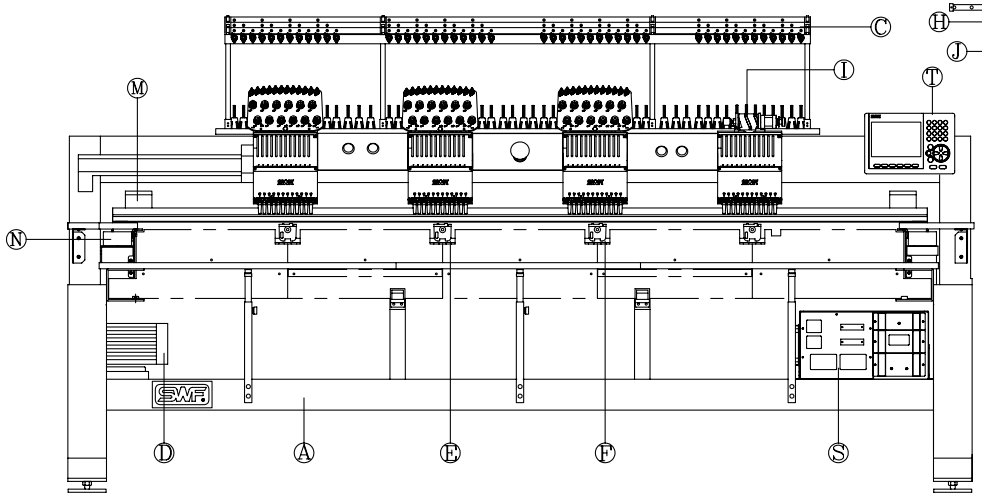

A1. Machine Body Ass'y(UK1202)
A2. Machine Body Ass'y(UK1204)
A3. Machine Body Ass'y(UK1206)
A4. Machine Body Ass'y(UH1506C)
A5. Machine Body Ass'y(UH1508)
B1. Work Table(UK1202)
B2. Work Table(UK1204)
B3. Work Table(UK1206)
B4. Work Table(UH1506C)
B5. Work Table(UH1508)
C. Spool Stand
D. Main Drive System
E. Bed I
F. Bed II
G. Thread Cutting Drive System
H1. Arm I
H2. Arm II
H3. Arm III
I. Color Change Set
J. Wiper Set
K. Head
L. Thread Tension Unit
M1. X-Axis Drive Set(UK1202)
M2. X-Axis Drive Set(UK1204)
M3. X-Axis Drive Set(UK1206)
M4. X-Axis Drive Set(UH1506C)
M5. X-Axis Drive Set(UH1508)
N1. Y-Axis Drive Set(UK1202)
N2. Y-Axis Drive Set(UK1204)
N3. Y-Axis Drive Set(UK1206)
N4. Y-Axis Drive Set(UH1506C)
N5. Y-Axis Drive Set(UH1508)
O1. Tubular Frame(UK1202)
O2. Tubular Frame(UK1204)
O3. Tubular Frame(UK1206)
O4. Tubular Frame(UH11506C)
O5. Tubular Frame(UH1508)
P1. Border Frame(UK1202)
P2. Border Frame(UK1204)
P3. Border Frame(UK1206)
P4. Border Frame(UH1506C)
P5. Border Frame(UH1508)
Q. S/B Switch Unit
R1. Sub-Control Unit & Lamp(UK1202)
R2. Sub-Control Unit & Lamp(UK1204)
R3. Sub-Control Unit & Lamp(UK1206)
R4. Sub-Control Unit & Lamp(UH1506C)
R5. Sub-Control Unit & Lamp(UH1508)
S. Controller
T. Operation Unit
U. Bobin Winder

CONTENT

A1	Machine Body Ass' y (UK1202)	7
A2	Machine Body Ass' y (UK1204)	9
A3	Machine Body Ass' y (UK1206)	11
A4	Machine Body Ass' y (UH1506C)	13
A5	Machine Body Ass' y (UH1508)	15
B1	Work Table (UK1202)	17
B2	Work Table (UK1204)	19
B3	Work Table (UK1206)	21
B4	Work Table (UH1506C)	23
B5	Work Table (UH1508)	25
C	Spool Stand	27
D	Main Drive System	31
E	Bed I	35
F	Bed II	37
G	Thread Cutting Drive System	39
H1	Arm I	41
H2	Arm II	45
H3	Arm III	47
I1	Color Change Set	49
I2	Color Change Set (UH1508)	51
J	Wiper Set	53
K	Head	57
L	Thread Tension Unit	61
M1	X-Axis Drive System (UK1202)	65
M2	X-Axis Drive System (UK1204)	67
M3	X-Axis Drive System (UK1206)	71
M4	X-Axis Drive System (UH1506C)	75
M5	X-Axis Drive System (UH1508)	79

1. 조에 속한 파트는 개별 조립 시 제품의 파손 또는 재봉 불량이 발생될 수 있어 해당 파트에 대한 주문 시에는 조 품목으로만 구입이 가능합니다.
2. 본 책자는Parts Book으로 제작되었으므로 매뉴얼로 사용 불가합니다.

1. The parts classified as ass'y items may cause damage to the machine or bad sewing when they are separately assembled.
   Hence, when they are ordered, they can be purchased as ass'y items only.
2. This is a parts book. It cannot be used as a manual.

CONTENT

N1	Y-Axis Drive System (UK1202)	83
N2	Y-Axis Drive System (UK1204)	87
N3	Y-Axis Drive System (UK1206)	91
N4	Y-Axis Drive System (UH1506C)	95
N5	Y-Axis Drive System (UH1508)	99
O1	Tubular Frame (UK1202)	103
O2	Tubular Frame (UK1204)	105
O3	Tubular Frame (UK1206)	107
O4	Tubular Frame (UH1506C)	109
O5	Tubular Frame (UH1508)	111
P1	Border Frame (UK1202)	113
P2	Border Frame (UK1204)	115
P3	Border Frame (UK1206)	117
P4	Border Frame (UH1506C)	119
P5	Border Frame (UH1508)	121
Q	S/B Switch Unit	123
R1	Sub Control Unit & Lamp (UK1202)	125
R2	Sub Control Unit & Lamp (UK1204)	127
R3	Sub Control Unit & Lamp (UK1206)	129
R4	Sub Control Unit & Lamp (UH1506C)	131
R5	Sub Control Unit & Lamp (UH1508)	133
S	Main Controller	135
T	Operation Unit	137
U	Bobbin Winder	139

A1 Machine Body Ass'y (UK1202)

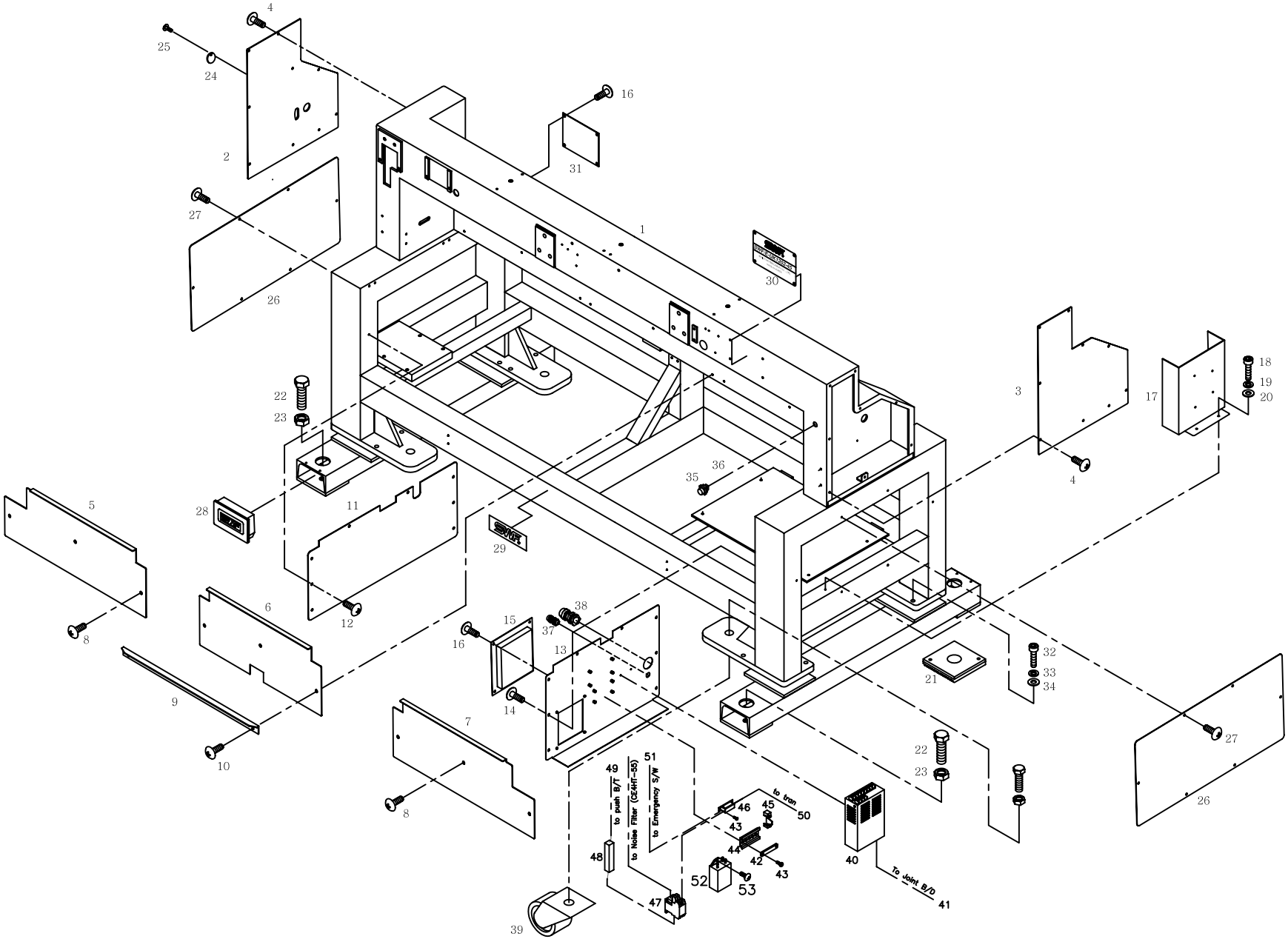

Ref.No	Part No.	Part Names	Q'ty
A1001	GP-016967-00	Beam & Body (Ass'Y) Uk1202-45	1
A1002	01001200UK00	Beam Bracket Cover(L)	1
A1003	01001300UK00	Beam Bracket Cover(R)	1
A1004	02044SC-3123	Truss Screw(M5*L8)	16
A1005	GP-008138-00	Body Front Cover (A)	1
A1006	01001500UK60	BODY FRONT COVER (F)	1
A1007	01000600UK00	BODY FRONT COVER (E)	1
A1008	02044SC-3123	Truss Screw(M5*L8)	7
A1009	17087CW-UK01	Table Support Angle	1
A1010	02044SC-3123	Truss Screw(M5*L8)	2
A1011	01000800UK00	Body Inside Cover (A)	1
A1012	02044SC-3123	Truss Screw(M5*L8)	8
A1013	GP-015850-00	Body Inside Cover (B)	1
A1014	02044SC-3123	Truss Screw(M5*L8)	8
A1015	02088PR-UK01	Power Switch Cover	1
A1016	02010SC-3123	Truss Screw(M4*L8)	8
A1017	07000100U000	Main Switch Box	1
A1018	02015SC-7113	Hex.Socket Bolt	2
A1019	05009SW-1111	Washer (@4-L)	2
A1020	02028SW-9115	Spring Washer(@4)	2
A1021	GP-010074-00	Leveling Base Ass'Y	4
A1022	SC-000337-00	Hex. Bolt (M20*L70)	4
A1023	02036SN-1211	Hex. Nut(M20-No2)	4
A1024	02054PR-A001	Main Motor Pulley Cover	1
A1025	02044SC-3123	Truss Screw(M5*L8)	1
A1026	02066PR-UK01	Body Side Cover	2
A1027	02044SC-3123	Truss Screw(M5*L8)	12
A1028	01022RB-UK01	Body Base Cover	4
A1029	02101ET-UK01	Brand Mark	1
A1030	GP-008142-00	MODEL MARK (C-UK1202-45)	1
A1031	02097ET-B001	Model Name Plate	1
A1032	14003SC-4113	Hex. Socket Bolt(M8*L25)	16
A1033	15095SW-3115	Spring Washer	16
A1034	08041SW-1111	Washer(@8-S)	16
A1035	02000700T000	Push B/T Switch	1
A1036	02105700U020	I/O Switch Connect Cable	1
A1037	02000400T000	Cable Grand (Dacl-11)	1
A1038	02000600T000	Cable Grand (Dapg-36)	1
A1039	CR-000001-00	HAMMER CASTER SET (URETHANE)	4
A1040	02001500U000	Jump Smps(Mrk0R4-H)	1

Ref. No	Part No.	Part Names	Q'ty
A1041	02106300U000	Sh-63	1
A1042	GP-015851-00	Magnetic switch Bracket Fixing Plate	1
A1043	02010SC-3123	Truss Screw(M4*L8)	8
A1044	02000910T000	Magnetic S/W Fixed Bracket	1
A1045	02001300T000	Bracket Stopper (Ce)	2
A1046	05000210T000	Transformer (Emt25V) 1A/25.5V	1
A1047	02000100T000	Magnetic Switch Set	1
A1048	02001200T000	Resister 5/20W (Ce)	1
A1049	02105600U040	I/O S/W - Magnetic Contactor	1
A1050	02105800E040	Magnetic - Emt24 Trans	1
A1051	02105900E040	Emt24 Trans Output - Emergen	1
A1052	GP-007476-00	Noise Filter	1
A1053	20042SC-9134	PLUS SCREW (M4*L6)	2

A2 Machine Body Ass'y (UK1204)

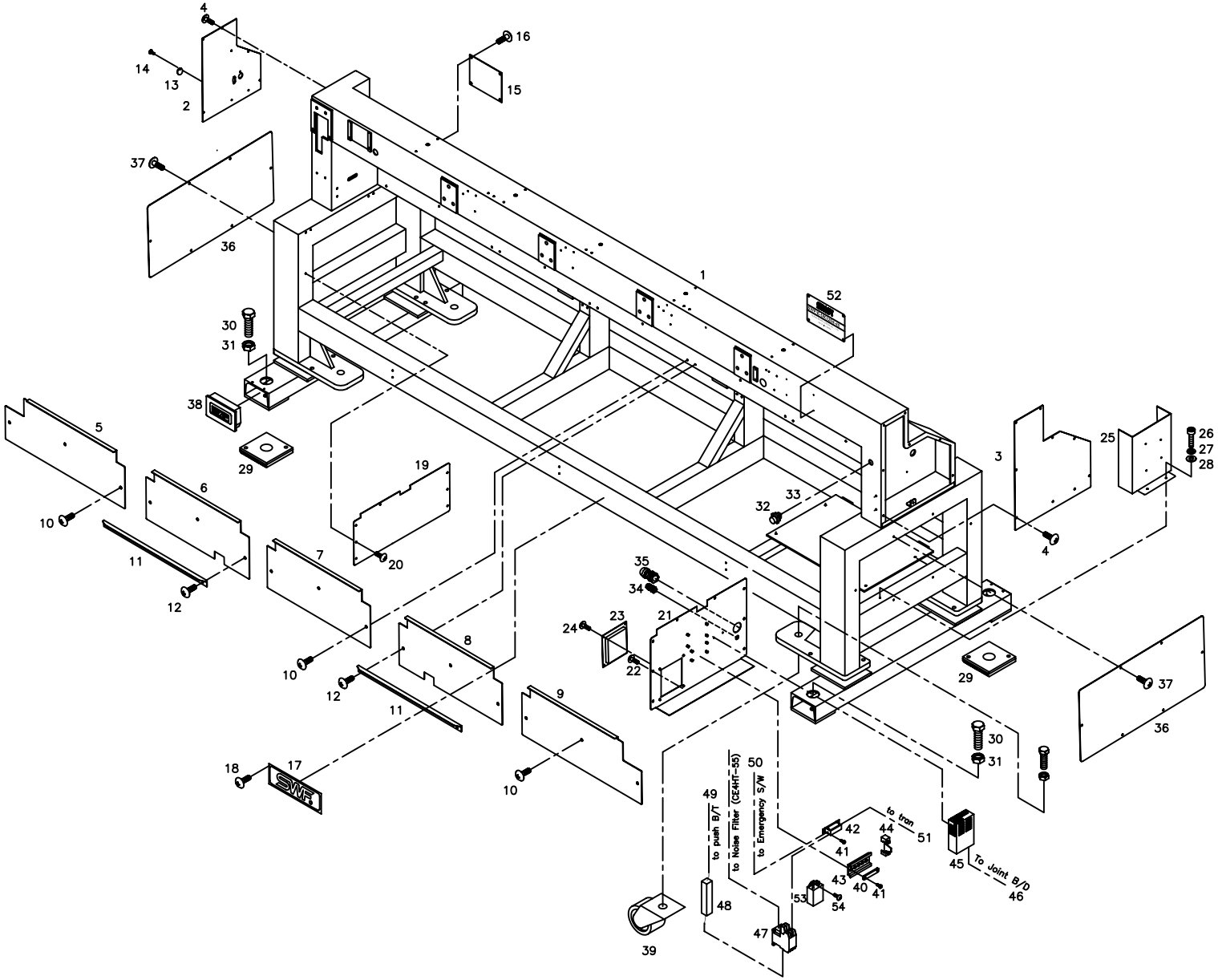

Ref.No	Part No.	Part Names	Q'ty
A2001	GP-016969-00	Beam & Body (Ass'Y)	1
A2002	01001200UK00	Beam Bracket Cover(L)	1
A2003	01001300UK00	Beam Brackt Cover(R)	1
A2004	02044SC-3123	Truss Screw (M5*L8)	17
A2005	01000200UK00	Body Front Cover (A)	1
A2006	01000300UK00	Body Front Cover (B)	1
A2007	01000400UK00	Body Front Cover (C)	1
A2008	01000500UK00	Body Front Cover (D)	1
A2009	01000600UK00	Body Front Cover (E)	1
A2010	02044SC-3123	Truss Screw (M5*L8)	2
A2011	17087CW-UK01	Table Support Angle	4
A2012	02044SC-3123	Truss Screw (M5*L8)	1
A2013	02054PR-A001	Main Motor Pulley Cover	1
A2014	02044SC-3123	Truss Screw (M5*L8)	1
A2015	02097ET-B001	Model Name Plate	4
A2016	02010SC-3123	Truss Screw (M4*L8)	4
A2017	02101ET-UK01	Brand Mark	1
A2018	02002SC-7119	Pluss Screw (M4*L8)	4
A2019	01000800UK00	Body Inside Cover (A)	1
A2020	02044SC-3123	Truss Screw (M5*L8)	7
A2021	GP-015850-00	Body Inside Cover (B)	1
A2022	02044SC-3123	Truss Screw (M5*L8)	8
A2023	02088PR-UK01	Power Switch Cover	4
A2024	02010SC-3123	Truss Screw (M4*L8)	4
A2025	07000100U000	Main Switch Box	1
A2026	02015SC-7113	Hex.Socket Bolt(M4*L10)	2
A2027	02028SW-9115	Spring Washer (@4)	2
A2028	05009SW-1111	Washer (@4-L)	2
A2029	GP-010074-00	Leveling Base Ass'Y	4
A2030	SC-000337-00	Hex. Bolt (M20*L70)	4
A2031	02036SN-1211	Hex. Nut (M20-No2)	4
A2032	02000700T000	Push B/T Switch	1
A2033	02105700U020	I/O Switch Connect Cable	1
A2034	02000400T000	Cable Grand (Dacl-11)	1
A2035	02000600T000	Cable Grand (Dapg-36)	1
A2036	02066PR-UK01	Body Side Cover	2
A2037	02044SC-3123	Truss Screw (M5*L8)	4
A2038	01022RB-UK01	Body Base Cover	1
A2039	CR-000001-00	HAMMER CASTER SET (URETHANE)	4
A2040	GP-015851-00	Magnetic Switch Bracket Fixing Plate	1

Ref. No	Part No.	Part Names	Q'ty
A2041	02010SC-3123	Truss Screw (M4*L8)	8
A2042	05000210T000	Transformer (Emt25V) 1A/25.5V	1
A2043	02000910T000	Magnetic S/W Fixed Bracket	1
A2044	02001300T000	Bracket Stopper (Ce)	2
A2045	02001500U000	Jump Smps (Mrk0R4-H)	1
A2046	02106300U000	Sh-63	1
A2047	02000100T000	Magnetic Switch Set	1
A2048	02001200T000	Resister 5/20W (Ce)	1
A2049	02105600U040	I/O S/W - Magnetic Contactor	1
A2050	02105900E040	Emt24 Trans Output - Emergen	1
A2051	02105800E040	Magnetic - Emt24 Trans	1
A2052	GP-008131-00	MODEL MARK (C-UK1204-45)	1
A2053	GP-007476-00	Noise Filter	1
A2054	20042SC-9134	PLUS SCREW (M4*L6)	2

A3 Machine Body Ass'y (UK1206)

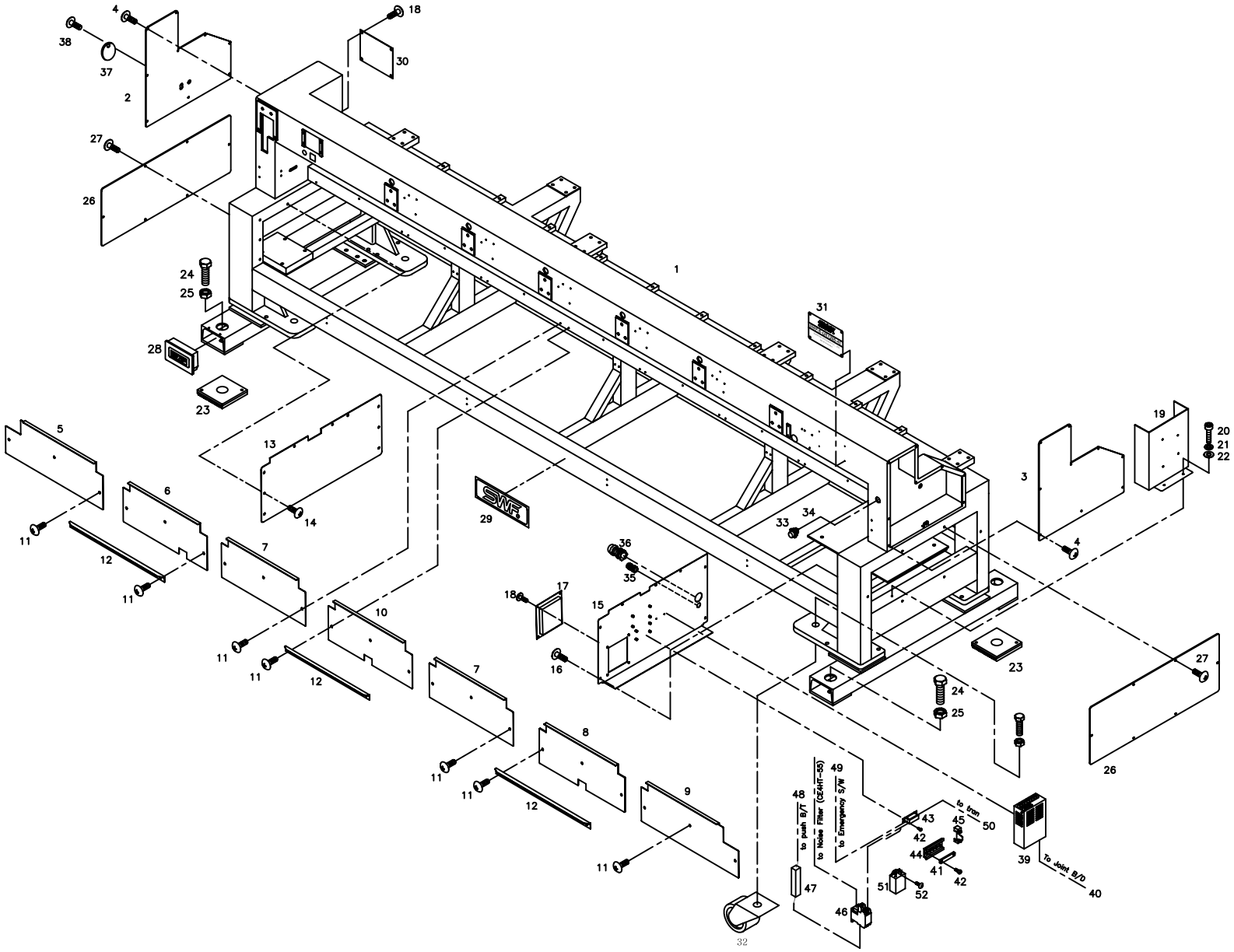

Ref.No	Part No.	Part Names	Q'ty
A3001	GP-016981-00	Beam & Body Ass'Y (UK1206-45)	1
A3002	01001700UK60	Beam Bracket Cover (L)	1
A3003	01001600UK60	Beam Bracket Cover (R)	1
A3004	02044SC-3123	Truss Screw (M5*L8)	18
A3005	GP-012039-00	Body Front Cover (A)	1
A3006	01000300UK60	Body Front Cover (B)	1
A3007	01000400UK00	Body Front Cover (C)	2
A3008	01000500UK60	Body Front Cover (D)	1
A3009	01000600UK00	Body Front Cover (E)	1
A3010	01001500UK60	Body Front Cover (F)	1
A3011	02044SC-3123	Truss Screw (M5*L8)	21
A3012	17087CW-UK01	Table Support Angle	3
A3013	01000800UK60	Body Inside Cover (A)	1
A3014	02044SC-3123	Truss Screw (M5*L8)	9
A3015	GP-016982-00	Body Inside Cover (B)	1
A3016	02044SC-3123	Truss Screw (M5*L8)	9
A3017	02088PR-UK01	Power Switch Cover	1
A3018	02010SC-3123	Truss Screw (M4*L8)	4
A3019	07000100U000	Main Switch Box	1
A3020	02015SC-7113	Hex.Socket Bolt(M4*L10)	2
A3021	05009SW-1111	Washer (@4-L)	2
A3022	02028SW-9115	Spring Washer (@4)	2
A3023	GP-010074-00	Leveling Base Ass'Y	4
A3024	SC-000337-00	Hex. Bolt (M20*L70)	4
A3025	02036SN-1211	Hex. Nut (M20-No2)	4
A3026	02058PR-UK06	Body Side Cover	2
A3027	02044SC-3123	Truss Screw (M5*L8)	12
A3028	02043RB-W121	Body Support Rubber Cap	4
A3029	02101ET-UK01	Brand Mark	1
A3030	02097ET-B001	Model Name Plate	1
A3031	GP-008152-00	Model Mark (C-UK1206-45)	1
A3032	CR-000001-00	Hammer Caster Set (Urethane)	4
A3033	02000700T000	Push B/T Switch	1
A3034	02105700U020	I/O Switch Connect Cable	1
A3035	02000400T000	Cable Grand (Dacl-11)	1
A3036	02000600T000	Cable Grand (Dapg-36)	1
A3037	02054PR-A001	Main Motor Pulley Cover	1
A3038	02044SC-3123	Truss Screw (M5*L8)	1
A3039	02001500U000	Jump Smps (Mrk0R4-H)	1
A3040	02106300U000	Sh-63	1

Ref. No	Part No.	Part Names	Q'ty
A3041	GP-015851-00	Magnetic Switch Bracket Fixing Plate	1
A3042	02010SC-3123	Truss Screw (M4*L8)	8
A3043	05000210T000	Transformer (Emt25V) 1A/25.5V	1
A3044	02000910T000	Magnetic S/W Fixed Bracket	1
A3045	02001300T000	Bracket Stopper (Ce)	2
A3046	02000100T000	Magnetic Switch Set	1
A3047	02001200T000	Resister 5/20W (Ce)	1
A3048	02105600U040	I/O S/W - Magnetic Contactor	1
A3049	02106100U060	Emt24 Trans Output - Emergen	1
A3050	02105800E040	Magnetic - Emt24 Trans	1
A3051	GP-007476-00	Noise Filter	1
A3052	20042SC-9134	PLUS SCREW (M4*L6)	2

A4 Machine Body Ass'y (UH1506C)

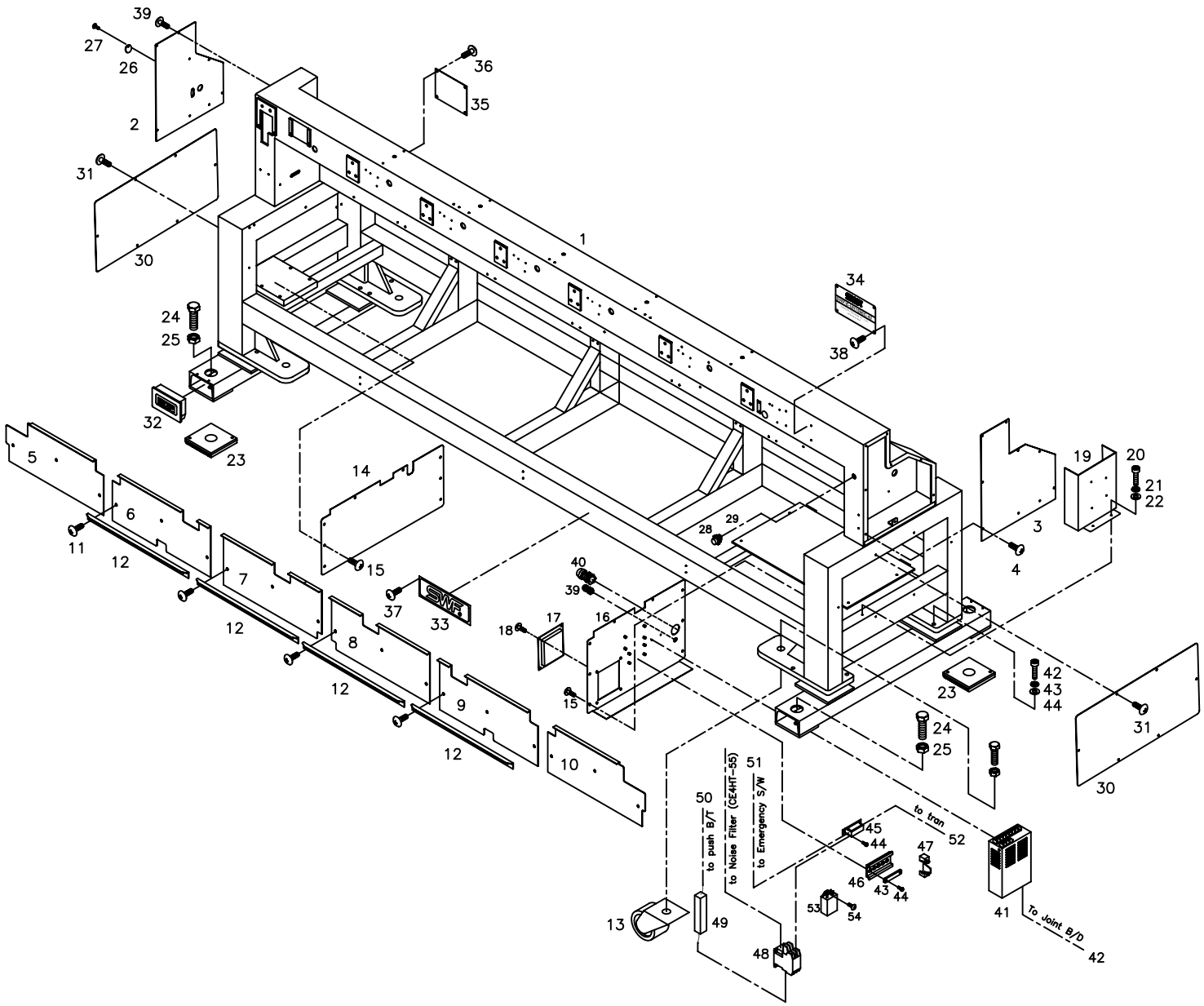

Ref.No	Part No.	Part Names	Q'ty
A4001	GP-016563-00	Beam & Body	1
A4002	01001200UK00	Beam Bracket Cover(L)	1
A4003	01001300UK00	Beam Brackt Cover(R)	1
A4004	02044SC-3123	Truss Screw (M5*L8)	16
A4005	09000810UH00	Body Front Cover (A)	1
A4006	09000910UH00	Body Front Cover (B)	1
A4007	09001010UH00	Body Front Cover (C)	1
A4008	09001110UH00	Body Front Cover (D)	1
A4009	09001210UH00	Body Front Cover (E)	1
A4010	09001310UH00	Body Front Cover (F)	1
A4011	02044SC-3123	Truss Screw (M5*L8)	18
A4012	17087CW-UK01	Table Support Angle	4
A4013	CR-000001-00	HAMMER CASTER SET (URETHANE)	4
A4014	01000800UK00	Body Inside Cover (A)	1
A4015	02044SC-3123	Truss Screw (M5*L8)	16
A4016	GP-015850-01	Body Inside Cover (B)	1
A4017	02088PR-UK01	Power Switch Cover	1
A4018	02010SC-3123	Truss Screw (M4*L8)	4
A4019	07000100U000	Main Switch Box	1
A4020	02015SC-7113	Hex.Socket Bolt(M4*L10)	2
A4021	02028SW-9115	Spring Washer (@4)	2
A4022	02063SW-1111	Washer(@4)	2
A4023	GP-010074-00	Leveling Base Ass'Y	4
A4024	SC-000337-00	Hex. Bolt (M20*L70)	4
A4025	02036SN-1211	Hex. Nut (M20-No2)	4
A4026	02054PR-A001	Main Motor Pulley Cover	1
A4027	02044SC-3123	Truss Screw (M5*L8)	1
A4028	02000700T000	Push B/T Switch	1
A4029	02105700U020	I/O Switch Connect Cable	1
A4030	02066PR-UK01	Body Side Cover	2
A4031	02044SC-3123	Truss Screw (M5*L8)	12
A4032	01022RB-UK01	Body Base Cover	4
A4033	02101ET-UK01	Brand Mark	1
A4034	GP-008129-00	Model Mark (C-UH1206C-45)	1
	GP-008125-00	Model Mark (C-UH1506C-45)	1
A4035	02097ET-B001	Model Name Plate (15C)	1
A4036	02002SC-7119	Pluss Screw (M4*L8)	4
A4037	02002SC-7119	Pluss Screw (M4*L8)	4
A4038	02002SC-7119	Pluss Screw (M4*L8)	4
A4039	02000400T000	Cable Grand (Dacl-11)	1

Ref. No	Part No.	Part Names	Q'ty
A4040	02000600T000	Cable Grand (Dapg-36)	1
A4041	02001500U000	Jump Smps (Mrk0R4-H)	1
A4042	02106300U000	Sh-63	1
A4043	GP-015851-00	Magnetic Switch Bracket Fixing Plate	1
A4044	02010SC-3123	Truss Screw (M4*L8)	8
A4045	05000210T000	Transformer (Emt25V) 1A/25.5V	1
A4046	02000910T000	Magnetic S/W Fixed Bracket	1
A4047	02001300T000	Bracket Stopper (Ce)	2
A4048	02000100T000	Magnetic Switch Set	1
A4049	02001200T000	Resister 5/20W (Ce)	1
A4050	02105600U040	I/O S/W - Magnetic Contactor	1
A4051	02106100U060	Emt24 Trans Output - Emergen	1
A4052	02105800E040	Magnetic - Emt24 Trans	1
A4053	GP-007476-00	Noise Filter	1
A4054	20042SC-9134	PLUS SCREW (M4*L6)	2

A5 Machine Body Ass'y (UH1508)

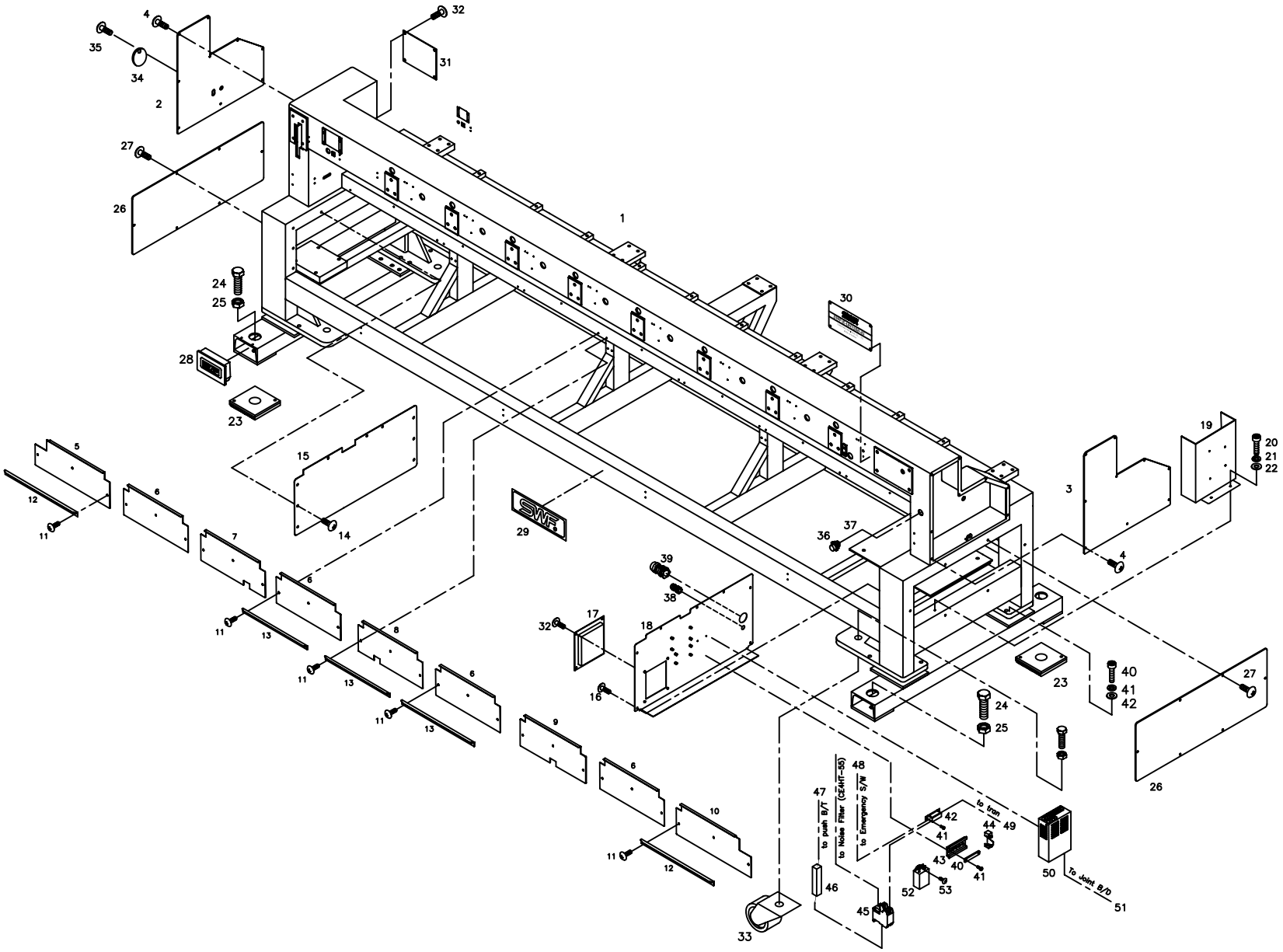

Ref.No	Part No.	Part Names	Q'ty
A5001	GP-017078-02	Beam & Body (Uh1208-45)	1
	GP-017006-02	Beam & Body (Uh1508-45)	1
A5002	01001700UK60	Beam Bracket Cover (L)	1
A5003	01001600UK60	Beam Bracket Cover (R)	1
A5004	02044SC-3123	Truss Screw (M5*L8)	18
A5005	09000800UH80	Body Front Cover A	1
A5006	09000900UH80	Body Front Cover B	4
A5007	09001000UH80	Body Front Cover C	1
A5008	09001100UH80	Body Front Cover D	1
A5009	09001200UH80	Body Front Cover E	1
A5010	09001300UH80	Body Front Cover F	1
A5011	02031SC-7113	Hex. Socket Screw(M5*L10)	21
A5012	05001300UH80	Table Support Angle A L529	2
A5013	05001400UH80	Table Support Angle B L399	3
A5014	02044SC-3123	Truss Screw (M5*L8)	9
A5015	01000800UK60	Body Inside Cover (A)	1
A5016	02044SC-3123	Truss Screw (M5*L8)	9
A5017	02088PR-UK01	Power Switch Cover	1
A5018	GP-017007-00	Body Inside Cover (B)	1
A5019	07000100U000	Main Switch Box	1
A5020	02015SC-7113	Hex.Socket Bolt(M4*L10)	2
A5021	05009SW-1111	Washer (@4-L)	2
A5022	02028SW-9115	Spring Washer (@4)	2
A5023	GP-010074-00	Leveling Base Ass'Y	4
A5024	SC-000337-00	Hex. Bolt (M20*L70)	4
A5025	02036SN-1211	Hex. Nut (M20-No2)	4
A5026	02058PR-UK06	Body Side Cover	2
A5027	02044SC-3123	Truss Screw (M5*L8)	12
A5028	02043RB-W121	Body Support Rubber Cap	4
A5029	02101ET-UK01	Brand Mark	1
A5030	GP-008158-00	Model Mark (C-UH1208-45)	1
	GP-008157-00	Model Mark (C-UH1508-45)	
A5031	02097ET-B001	Model Name Plate	1
A5032	02010SC-3123	Truss Screw (M4*L8)	8
A5033	CR-000001-00	Hammer Caster Set (Urethane)	4
A5034	02054PR-A001	Main Motor Pulley Cover	1
A5035	02044SC-3123	Truss Screw (M5*L8)	1
A5036	02000700T000	Push B/T Switch	1
A5037	02105700U020	I/O Switch Connect Cable	1
A5038	02000400T000	Cable Grand (Dacl-11)	1

Ref. No	Part No.	Part Names	Q'ty
A5039	02000600T000	Cable Grand (Dapg-36)	1
A5040	GP-015851-00	Magnetic Switch Bracket Fixing Plate	1
A5041	02010SC-3123	Truss Screw (M4*L8)	8
A5042	05000210T000	Transformer (Emt25V) 1A/25.5V	1
A5043	02000910T000	Magnetic S/W Fixed Bracket	1
A5044	02001300T000	Bracket Stopper (Ce)	2
A5045	02000100T000	Magnetic Switch Set	1
A5046	02001200T000	Resister 5/20W (Ce)	1
A5047	02105600U040	I/O S/W - Magnetic Contactor	1
A5048	02106100U060	Emt24 Trans Output - Emergen	1
A5049	02105800E040	Magnetic - Emt24 Trans	1
A5050	02001500U000	Jump Smps (Mrk0R4-H)	1
A5051	02106300U000	Sh-63	1
A5052	GP-007476-00	Noise Filter	1
A5053	20042SC-9134	PLUS SCREW (M4*L6)	2

B1 Work Table (UK1202)

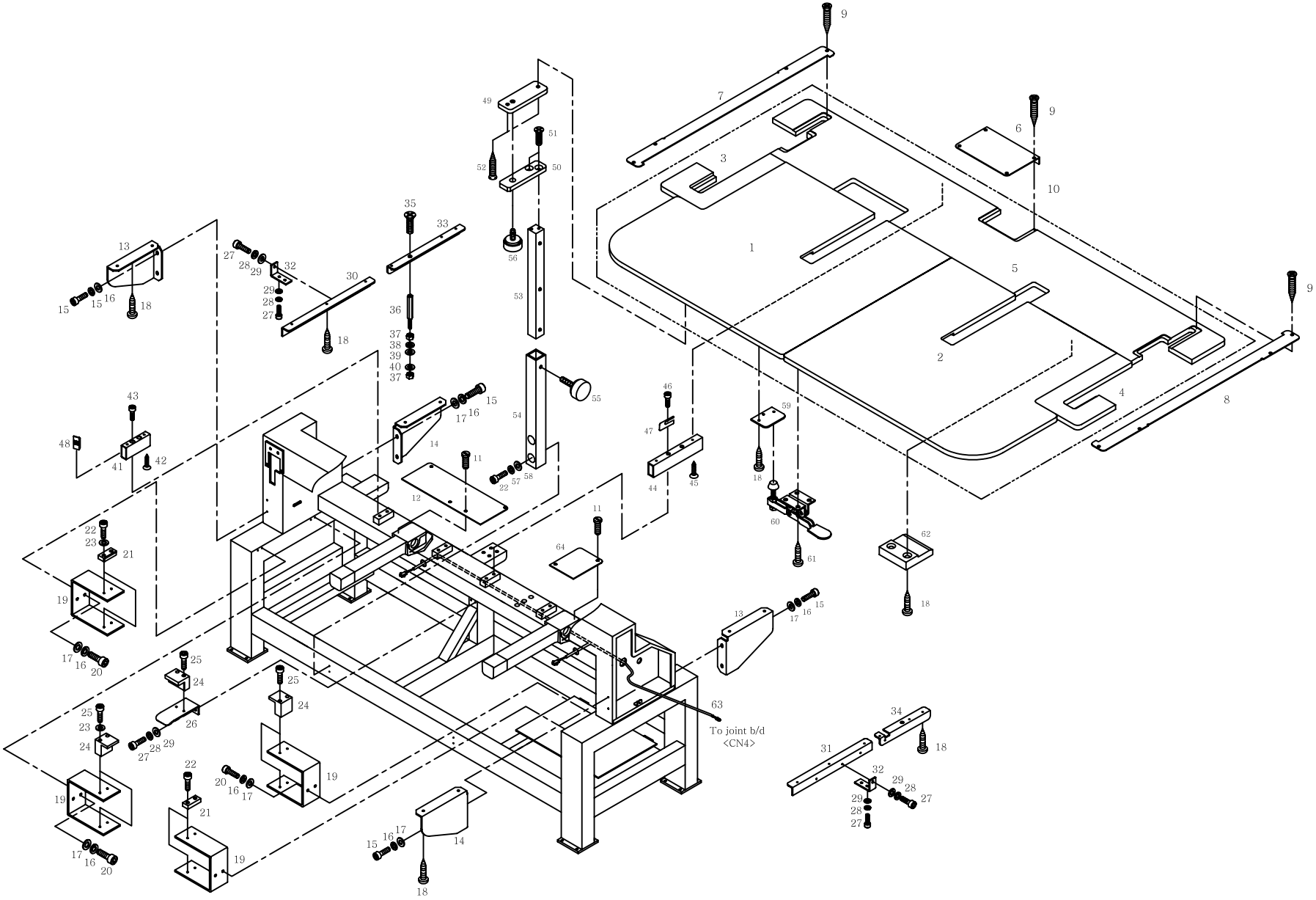

Ref.No	Part No.	PartNames	Q'ty
B1001	05000500UK20	Table "A"	1
B1002	05000600UK20	Table "B"	1
B1003	05000310UK40	Fixed Table "B"	1
B1004	05000410UK40	Fixed Table "C"	1
B1005	GP-008139-00	FIXED TABLE "A"	1
B1006	05000800UK60	Y-Motor Cover	1
B1007	16008PR-UK01	Lm Guide Cover (L)	1
B1008	16010PR-UK01	Lm Guide Cover (R)	1
B1009	08101SC-8329	Tapping Screw(M3*L16)	12
B1010	10000310A000	Washer T=0.3,0.5,0.8,1.2,1.6	18
B1011	02030SC-T121	Bed Cover Screw(9/64" 40)	6
B1012	16018PR-UK01	Mes Cam Driving Box Cover	1
B1013	16020PR-UK01	Front Table Support (L)	2
B1014	16025PR-UK01	Front Table Support (R)	2
B1015	08076SC-7113	Hex. Socket Bolt	8
B1016	18048SW-3115	Spring Washer	16
B1017	16018SW-1111	Washer(@5)	16
B1018	16009SC-8330	Tapping Screw (M6*L20)	41
B1019	17077PR-UK01	Table Fixing Plate	4
B1020	08062SC-7113	Hex. Socket Bolt	8
B1021	17085PM-UK01	Positioning Block	4
B1022	02015SC-7113	Hex.Socket Bolt	4
B1023	18015SW-3111	WASHER (4@)	2
B1024	05008100UK40	Table Fixing Block	6
B1025	04030MC-4113	HEX.SOCKET BOLT (M4*L30)	12
B1026	17073PR-UK01	Table Support Angle "F"	1
B1027	03016SC-4113	HEX. SOCKET BOLT (M5*L15)	12
B1028	18048SW-3115	Spring Washer	12
B1029	16018SW-1111	Washer(@5)	12
B1030	16000100U000	TABLE SUPPORT ANGLE (A1)	1
B1031	16000200U000	TABLE SUPPORT ANGLE (D1)	1
B1032	05001500UK20	Angle Support	4
B1033	05000920UH01	TABLE SUPPORT ANGLE (A)L250	1
B1034	05001120UH01	TABLE SUPPORT ANGLE (D)L250	1
B1035	04054SC-8119	Plus Screw(M6*L15)	2
B1036	05001600U000	Table Support Stud	2
B1037	04032SN-A001	Hex. Nut (M8-No2)	4
B1038	15095SW-3115	Spring Washer	2
B1039	04030SW-A001	Stud Bolt Washer(L)(@8)	2
B1040	04029SW-A001	Stud Bolt Washer(S)(@8)	2

Ref. No	Part No.	Part Names	Q'ty
B1041	GP-008127-00	Table Support Angle (B) L140	2
B1042	16009SC-8330	Tapping Screw(M6*L20)	2
B1043	14002SC-7113	Hex.Socket Bolt	2
B1044	GP-008797-00	Table Support Angle (C)L266.5	2
B1045	16010SC-8330	TAPPING SCREW (M6*L25)	12
B1046	16009SC-4113	Hex.Socket Bolt(M10*L25)	6
B1047	05001700U000	Table Support Plate	8
B1048	GP-003757-00	TABLE SUPPORT END CAP	8
B1049	16061PR-UK01	Table Support Plate (A)	2
B1050	16058AD-UK01	Table Support Plate (B)	2
B1051	15089SC-7119	C.S Screw	4
B1052	08101SC-8329	Tapping Screw(M3*L16)	4
B1053	05001300U000	Table Support L=263	2
B1054	GP-008798-00	Table Support Guide	2
B1055	17062SC-UK01	Table Support Stopper Screw	1
B1056	17063SC-UK01	Table Support Stopper Screw	1
B1057	02028SW-9115	Spring Washer(@4)	4
B1058	05009SW-1111	Washer(@4-L)	4
B1059	16065PR-UK01	Clamp Plate	2
B1060	16067ET-UK01	Table Toggle Clamp	6
B1061	19002SC-1330	Tapping Screw(4*L16-No1)	24
B1062	16063PM-UK01	Table Holding Block	7
B1063	25024EL-UK02	Cable (25-24) 2Head	1

B2 Work Table (UK1204)

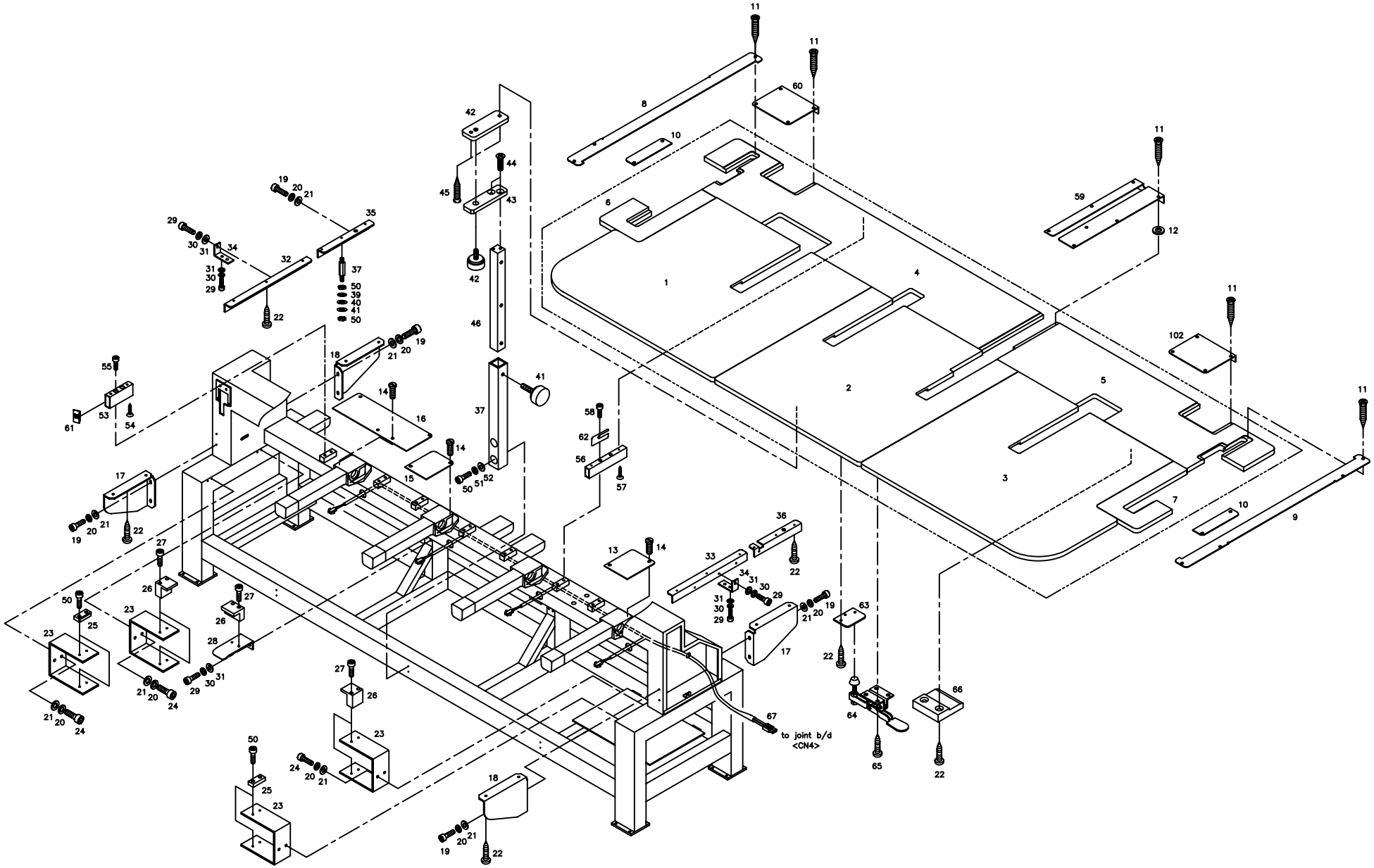

Ref.No	Part No.	Part Names	Q'ty
B2001	05000500UK40	Table "A"	1
B2002	GP-008132-01	Table "B"	1
B2003	05000700UK40	Table "C"	1
B2004	GP-008133-00	Fixed Table "A"	1
B2005	05000220UK40	FIXED TABLE "B"	1
B2006	05000310UK40	Fixed Table "C"	1
B2007	05000410UK40	Fixed Table "D"	1
B2008	05000600UH01	Lm Guide Cover (L) L=693	1
B2009	05000700UH01	Lm Guide Cover (R) L=693	1
B2010	05001400UH00	Belt Cover	2
B2011	08101SC-8329	Tapping Screw (M3*L16)	27
B2012	10000310A000	Washer T=0.3,0.5,0.8,1.2,1.6	30
B2013	16016PR-UK01	GEAR COVER	1
B2014	02030SC-T121	Bed Cover Screw(9/64" 40)	10
B2015	16016PR-UK01	Gear Cover	1
B2016	16018PR-UK01	Mes Cam Driving Box Cover	1
B2017	16020PR-UK01	Front Table Support (L)	2
B2018	16025PR-UK01	Front Table Support (R)	2
B2019	08076SC-7113	Hex. Socket Bolt (M5*L12)	14
B2020	18048SW-3115	Spring Washer (@5)	24
B2021	16018SW-1111	Washer (@5)	24
B2022	16009SC-8330	Tapping Screw (M6*L20)	71
B2023	17077PR-UK01	Table Fixing Plate	4
B2024	08062SC-7113	Hex. Socket Bolt (M5*L20)	8
B2025	17085PM-UK01	Positioning Block	4
B2026	05008100UK40	Table Fixing Block	6
B2027	05014SC-7113	Hex. Socket Bolt (M4*L25)	12
B2028	17073PR-UK01	Table Support Angle "F"	2
B2029	08076SC-7113	Hex. Socket Bolt (M5*L12)	12
B2030	18048SW-3115	Spring Washer (@5)	12
B2031	16018SW-1111	Washer (@5)	12
B2032	16000100U000	TABLE SUPPORT ANGLE (A1)	1
B2033	16000200U000	TABLE SUPPORT ANGLE (D1)	1
B2034	05001500UK40	Angle Support	4
B2035	05000920UH01	TABLE SUPPORT ANGLE (A)L250	1
B2036	05001120UH01	TABLE SUPPORT ANGLE (D)L250	1
B2037	05001600U000	Table Support Stud	4
B2038	04032SN-A001	Hex. Nut (M8-No2)	8
B2039	15095SW-3115	Spring Washer (@8)	4
B2040	04030SW-A001	Stud Bolt Washer(L) (@8)	4

Ref. No	Part No.	Part Names	Q'ty
B2041	04029SW-A001	Stud Bolt Washer(S) (@8)	4
B2042	16061PR-UK01	Table Support Plate (A)	3
B2043	16058AD-UK01	Table Support Plate (B)	3
B2044	15089SC-7119	C.S Screw (M4*L12)	6
B2045	17012SC-8329	Hex. Socket Set Screw(M4*L16)	6
B2046	05001300U000	Table Support L=263	3
B2047	GP-008798-00	Table Support Guide	3
B2048	17062SC-UK01	Table Support Stopper Screw	3
B2049	17063SC-UK01	Table Support Stopper Screw	3
B2050	02015SC-7113	Hex.Socket Bolt(M4*L10)	14
B2051	02028SW-9115	Spring Washer (@4)	6
B2052	05009SW-1111	Washer (@4-L)	6
B2053	GP-008127-00	Table Support Angle (B) L140	1
B2054	16009SC-8330	Tapping Screw (M6*L20)	2
B2055	14002SC-7113	Hex.Socket Bolt (M6*L15)	2
B2056	GP-008797-00	Table Support Angle (C)L266.5	7
B2057	16009SC-8330	Tapping Screw (M6*L20)	14
B2058	14002SC-7113	Hex.Socket Bolt (M6*L15)	14
B2059	GP-008128-00	Rail Guide Table Cover L352	1
B2060	05000810UH01	Y-Motor Cover	2
B2061	GP-003757-00	TABLE SUPPORT END CAP	16
B2062	05001700U000	Table Support Plate	16
B2063	16065PR-UK01	Clamp Plate	4
B2064	16067ET-UK01	Table Toggle Clamp	8
B2065	19002SC-1330	Tapping Screw (4*L16-No1)	32
B2066	16063PM-UK01	Table Holding Block	7
B2067	25025EL-UK01	Picker Sol. Connecting/ 4Ht-25	1

B3

Work Table (UK1206)

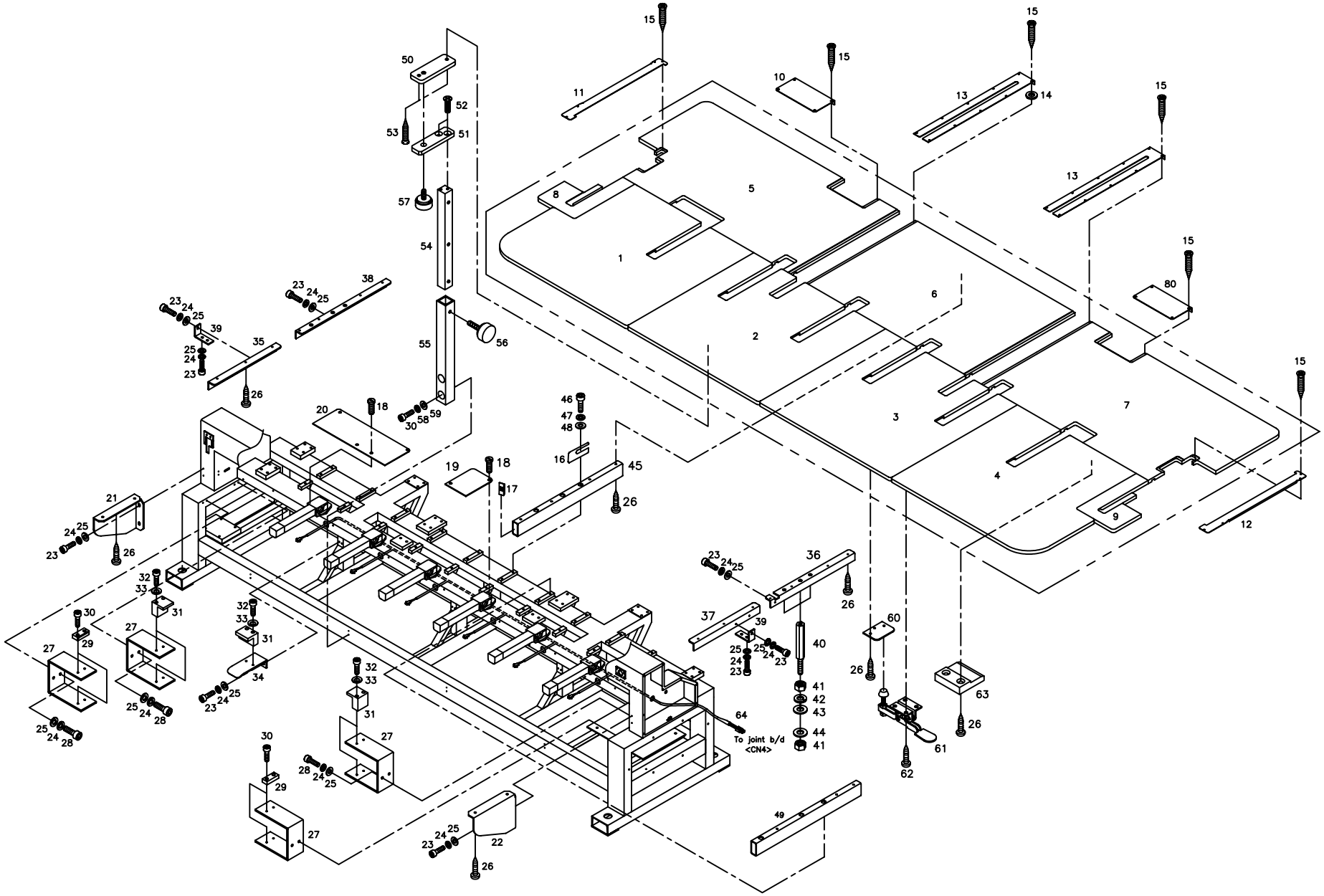

Ref.No	Part No.	Part Names	Q'ty
B3001	05000600UK60	Table "A"	1
B3002	05000700UK60	Table "B"	1
B3003	05000900UK60	Table "C"	1
B3004	05001000UK60	Table "D"	1
B3005	GP-008145-00	Fixed Table "A"	1
B3006	GP-008146-00	Fixed Table "B"	1
B3007	GP-008147-00	FIXED TABLE "C"	1
B3008	05000410UH81	Fixed Table "D"	1
B3009	05000510UH81	Fixed Table "E"	1
B3010	05000800UK60	Y-Motor Cover	2
B3011	05000600UH81	LM Guide Cover (L) L=693	1
B3012	05000700UH81	LM Guide Cover (R) L=693	1
B3013	05000100UH80	Table Connecting Cover	2
B3014	10000310A000	Washer T=0.3,0.5,0.8,1.2,1.6	54
B3015	08101SC-8329	Tapping Screw (M3*L16)	44
B3016	05001700U000	Table Support Plate	46
B3017	GP-003757-00	TABLE SUPPORT END CAP	24
B3018	02030SC-T121	Bed Cover Screw(9/64" 40)	14
B3019	16016PR-UK01	Gear Cover	4
B3020	16018PR-UK01	Mes Cam Driving Box Cover	1
B3021	16020PR-UK01	Front Table Support (L)	1
B3022	16025PR-UK01	Front Table Support (R)	1
B3023	03016SC-4113	HEX. SOCKET BOLT(M5*L15)	26
B3024	18048SW-3115	Spring Washer (@5)	34
B3025	16018SW-1111	Washer (@5)	34
B3026	16009SC-8330	Tapping Screw (M6*L20)	83
B3027	17077PR-UK06	Table Fixing Plate	4
B3028	08076SC-7113	HEX. SOCKET BOLT(M5*L12)	8
B3029	17085PM-UK01	Positioning Block	4
B3030	02015SC-7113	Hex.Socket Bolt(M4*L10)	8
B3031	05008100UK40	Table Fixing Block	7
B3032	04030MC-4113	HEX.SOCKET BOLT(M4*L30)	14
B3033	18015SW-3111	WASHER(4@)	14
B3034	17073PR-UK01	Table Support Angle "F"	3
B3035	05010200U000	TABLE SUPPORTER (A2) L=402	1
B3036	05010300U000	TABLE SUPPORTER (B1) L=628	1
B3137	05010400U000	TABLE SUPPORTER (B2) L=402	1
B3038	05010100U000	TABLE SUPPORTER (A1) L=628	1
B3039	05001500UK40	Angle Support	4
B3040	16021CW-A001	Table Support Stud	6

Ref. No	Part No.	Part Names	Q'ty
B3041	04032SN-A001	Hex. Nut (M8-No2)	12
B3042	15095SW-3115	Spring Washer (@8)	6
B3043	04030SW-A001	Stud Bolt Washer(L) (@8)	6
B3044	04029SW-A001	Stud Bolt Washer(S) (@8)	6
B3045	GP-008797-00	Table Supporter (C)	8
B3046	16009SC-4113	Hex.Socket Bolt(M10*L25)	30
B3047	16029SW-3115	Spring Washer (10@)	30
B3048	01007SW-1111	Washer (10@)	30
B3049	17105AD-UK06	TABLE SUPPORT D	2
B3050	16061PR-UK01	Table Support Plate (A)	4
B3051	16058AD-UK01	Table Support Plate (B)	4
B3052	15089SC-7119	C.S Screw (M4*L12)	8
B3053	08101SC-8329	Tapping Screw (M3*L16)	8
B3054	05001300U000	Table Support L=263	4
B3055	GP-008798-00	Table Support Guide	4
B3056	17063SC-UK01	TABLE SUPPORT STOPPER SCREW	4
B3057	17062SC-UK01	Table Support Stopper Screw	4
	17063SC-UK01	Table Support Stopper Screw	4
B3058	02028SW-9115	Spring Washer (@4)	8
B3059	05009SW-1111	Washer (@4-L)	8
B3060	16065PR-UK01	Clamp Plate	6
B3061	16067ET-UK01	Table Toggle Clamp	10
B3062	19002SC-1330	Tapping Screw (4*L16-No1)	40
B3063	16063PM-UK01	Table Holding Block	12
B3064	25021EL-UK06	Cable (25-21)	1

B4 Work Table (UH1506C)

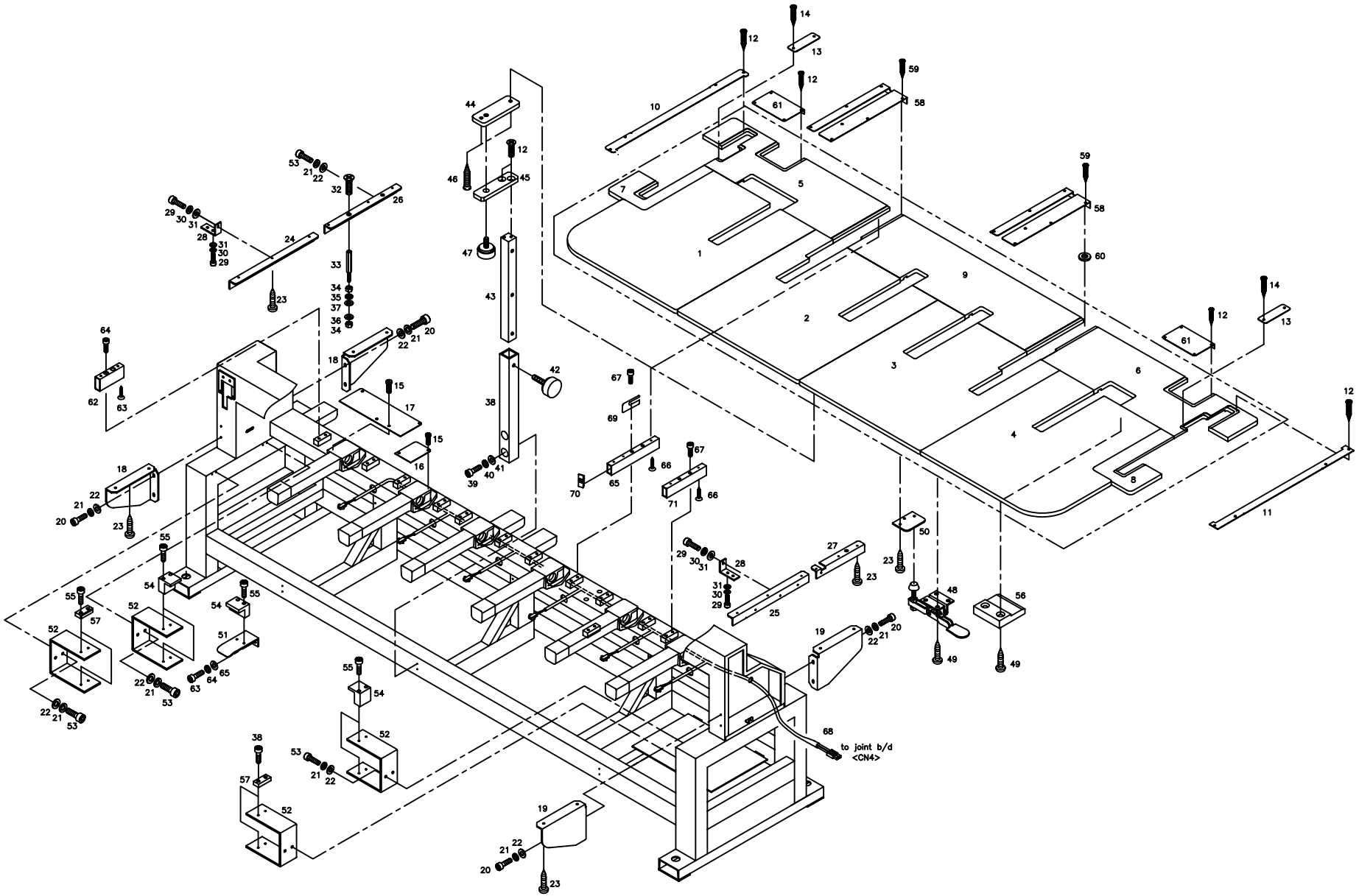

Ref.No	Part No.	Part Names	Q'ty
B4001	08000110UH61	Table "A"	1
B4002	GP-008121-00	Table "B"	1
B4003	GP-008122-00	Table "C"	1
B4004	08000410UH61	Table "D"	1
B4005	GP-008119-00	Fixed Table "A"	1
B4006	05000210UH61	Fixed Table "B"	1
B4007	05000310UH61	Fixed Table "C"	1
B4008	05000410UH61	Fixed Table "D"	1
B4009	GP-016751-00	Fixed Table	1
B4010	05000600UH01	Lm Guide Cover (L) L=693	1
B4011	05000700UH01	Lm Guide Cover (R) L=693	1
B4012	08101SC-8329	Tapping Screw (M3*L16)	30
B4013	05001400UH00	Belt Cover	2
B4014	08101SC-8329	Tapping Screw (M3*L16)	4
B4015	02030SC-T121	Bed Cover Screw(9/64" 40)	10
B4016	16016PR-UK01	Gear Cover	2
B4017	16018PR-UK01	Mes Cam Driving Box Cover	1
B4018	16020PR-UK01	Front Table Support (L)	2
B4019	16025PR-UK01	Front Table Support (R)	2
B4020	08076SC-7113	Hex. Socket Bolt (M5*L12)	42
B4021	18048SW-3115	Spring Washer (@5)	42
B4022	16018SW-1111	Washer (@5)	50
B4023	16009SC-8330	Tapping Screw (M6*L20)	93
B4024	16000100U000	TABLE SUPPORT ANGLE (A1)	1
B4125	16000200U000	TABLE SUPPORT ANGLE (D1)	1
B4126	05000920UH01	TABLE SUPPORT ANGLE (A)L250	1
B4127	05001120UH01	TABLE SUPPORT ANGLE (D)L250	1
B4028	05001500UK40	ANGLE SUPPORT	4
B4029	08076SC-7113	Hex. Socket Bolt (M5*L12)	12
B4030	18048SW-3115	Spring Washer (@5)	12
B4031	16018SW-1111	Washer (@5)	12
B4032	04054SC-8119	Plus Screw(M6*L15)	1
B4033	05001600U000	Table Support Stud	4
B4034	04032SN-A001	Hex. Nut (M8-No2)	4
B4035	15095SW-3115	Spring Washer (@8)	2
B4036	04029SW-A001	Stud Bolt Washer(S) (@8)	2
B4037	04030SW-A001	Stud Bolt Washer(L) (@8)	2
B4038	16052AD-UK01	Table Support Guide	4
B4039	02015SC-7113	Hex.Socket Bolt(M4*L10)	24
B4040	02028SW-9115	Spring Washer (@4)	8

Ref.No	Part No.	Part Names	Q'ty
B4041	05009SW-1111	Washer (@4-L)	8
B4042	17062SC-UK01	Table Support Stopper Screw	2
B4043	05001300U000	Table Support L=263	4
B4044	16061PR-UK01	Table Support Plate (A)	4
B4045	16058AD-UK01	Table Support Plate (B)	4
B4046	15089SC-7119	C.S Screw (M4*L12)	8
B4047	17063SC-UK01	Table Support Stopper Screw	2
B4048	16067ET-UK01	Table Toggle Clamp	10
B4049	19002SC-1330	Tapping Screw (4*L16-No1)	40
B4050	16065PR-UK01	Clamp Plate	6
B4051	17073PR-UK01	Table Support Angle "F"	3
B4052	17077PR-UK01	Table Fixing Plate	4
B4053	08062SC-7113	Hex. Socket Bolt (M5*L20)	8
B4054	05008100UK40	Table Fixing Block	7
B4055	05014SC-7113	Hex. Socket Bolt (M4*L25)	14
B4056	16063PM-UK01	Table Holding Block	10
B4057	17085PM-UK01	Positioning Block	4
B4058	GP-008128-00	Rail Guide Table Cover L352	2
B4059	02030SC-T121	Bed Cover Screw(9/64" 40)	10
B4060	10000310A000	Washer T=0.3,0.5,0.8,1.2,1.6	54
B4061	05000810UH01	Y-Motor Cover	2
B4062	GP-008127-00	Table Support Angle (B) L160	2
B4063	16009SC-8330	Tapping Screw (M6*L20)	4
B4064	14002SC-7113	Hex.Socket Bolt (M6*L15)	4
B4065	05001000UK40	Table Support Angle (C)L266.5	8
B4066	16009SC-8330	Tapping Screw (M6*L20)	16
B4067	14002SC-7113	Hex.Socket Bolt (M6*L15)	16
B4068	02102100UH60	Cable (25-21)	1
B4069	05001700U000	Table Support Plate	46
B4070	GP-003757-00	TABLE SUPPORT END CAP	20

B5

Work Table (UH1508)

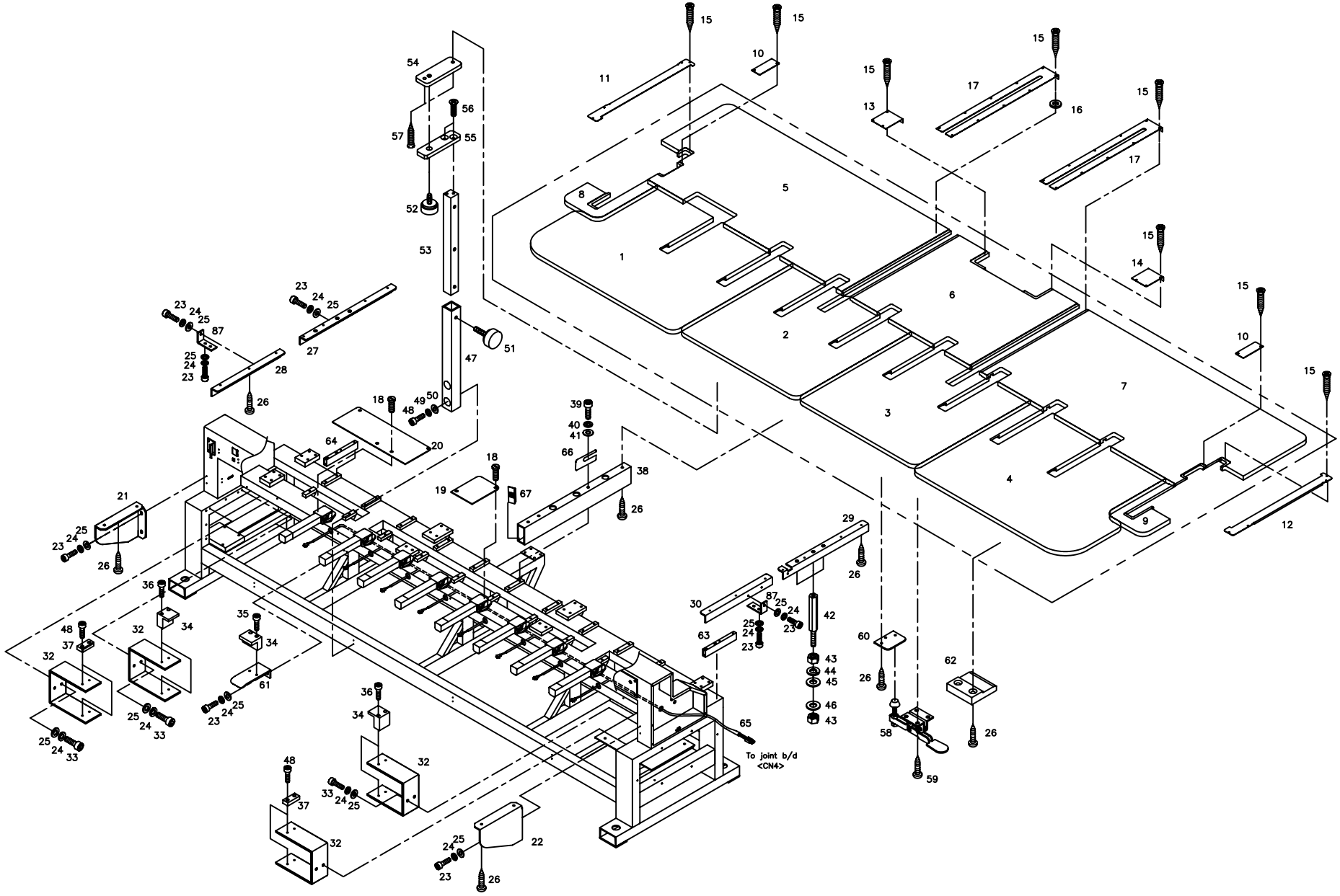

Ref.No	Part No.	PartNames	Q'ty
B5001	08000110UH81	Table "A"	1
B5002	08000210UH81	Table "B"	1
B5003	08000310UH81	Table "C"	1
B5004	08000410UH81	Table "D"	1
B5005	GP-008156-00	Fixed Table "A"	1
B5006	05000210UH81	Fixed Table "B"	1
B5007	05000310UH81	Fixed Table "C"	1
B5008	05000410UH81	Fixed Table "D"	1
B5009	05000510UH81	Fixed Table "E"	1
B5010	17103LA-UK06	Belt Tension Adjusting Cover	2
B5011	05000600UH81	LM Guide Cover (L) L=693	1
B5012	05000700UH81	LM Guide Cover (R) L=693	1
B5013	05000110UH80	Y-Motor Coupling Cover L	1
B5014	05000120UH80	Y-Motor Coupling Cover R	1
B5015	08101SC-8329	Tapping Screw (M3*L16)	44
B5016	10000310A000	Washer T=0.3,0.5,0.8,1.2,1.6	54
B5017	05000100UH80	Table Cover L766	2
B5018	02030SC-T121	Bed Cover Screw(9/64" 40)	14
B5019	16016PR-UK01	Gear Cover	4
B5020	16018PR-UK01	Mes Cam Driving Box Cover	1
B5021	16020PR-UK01	Front Table Support (L)	1
B5022	16025PR-UK01	Front Table Support (R)	1
B5023	08076SC-7113	Hex. Socket Bolt (M5*L12)	26
B5024	18048SW-3115	Spring Washer (@5)	34
B5025	16018SW-1111	Washer (@5)	34
B5026	16009SC-8330	Tapping Screw (M6*L20)	83
B5027	05010100U000	TABLE SUPPORTER (A1) L=628	1
B5028	05010200U000	TABLE SUPPORTER (A2) L=402	1
B5029	05010300U000	TABLE SUPPORTER (B1) L=628	1
B5030	05010400U000	TABLE SUPPORTER (B2) L=402	1
B5031	05001500UK40	Angle Support	4
B5032	05001500UH80	TABLE SUPPORT PLATE	4
B5033	08062SC-7113	Hex. Socket Bolt (M5*L20)	8
B5034	05008100UK40	Table Fixing Block	7
B5035	05014SC-7113	Hex. Socket Bolt (M4*L25)	10
B5036	04030MC-4113	HEX.SOCKET BOLT (M4*L30)	4
B5037	17085PM-UK01	Positioning Block	4
B5038	GP-008148-00	Table Supporter (C)L547	10
B5039	16009SC-4113	Hex.Socket Bolt(M10*L25)	40
B5040	16029SW-3115	Spring Washer (10@)	40

Ref. No	Part No.	Part Names	Q'ty
B5041	01007SW-1111	Washer (10@)	40
B5042	16021CW-A001	Table Support Stud	6
B5043	04032SN-A001	Hex. Nut (M8-No2)	12
B5044	15095SW-3115	Spring Washer (@8)	6
B5045	04030SW-A001	Stud Bolt Washer(L) (@8)	6
B5046	04029SW-A001	Stud Bolt Washer(S) (@8)	6
B5047	GP-008798-00	Table Support Guide	4
B5048	02015SC-7113	Hex.Socket Bolt(M4*L10)	8
B5049	02028SW-9115	Spring Washer (@4)	8
B5050	05009SW-1111	Washer (@4-L)	8
B5051	17062SC-UK01	Table Support Stopper Screw	2
B5052	17063SC-UK01	Table Support Stopper Screw	2
B5053	05001300U000	Table Support L=263	4
B5054	16061PR-UK01	Table Support Plate (A)	4
B5055	16058AD-UK01	Table Support Plate (B)	4
B5056	15089SC-7119	C.S Screw (M4*L12)	8
B5057	08101SC-8329	Tapping Screw (M3*L16)	8
B5058	16067ET-UK01	Table Toggle Clamp	10
B5059	19002SC-1330	Tapping Screw (4*L16-No1)	40
B5060	16065PR-UK01	Clamp Plate	6
B5061	17073PR-UK01	Table Support Angle "F"	3
B5062	16063PM-UK01	Table Holding Block	12
B5063	05001200UH80	Table Support Angle (E) L337	2
B5064	05001100UH80	Table Support Angle (B) L452	1
B5065	25021EL-UK06	Cable (25-21)	1
B5066	05001700U000	Table Support Plate	46
B5067	GP-003757-00	TABLE SUPPORT END CAP	20

C

Spool Stand

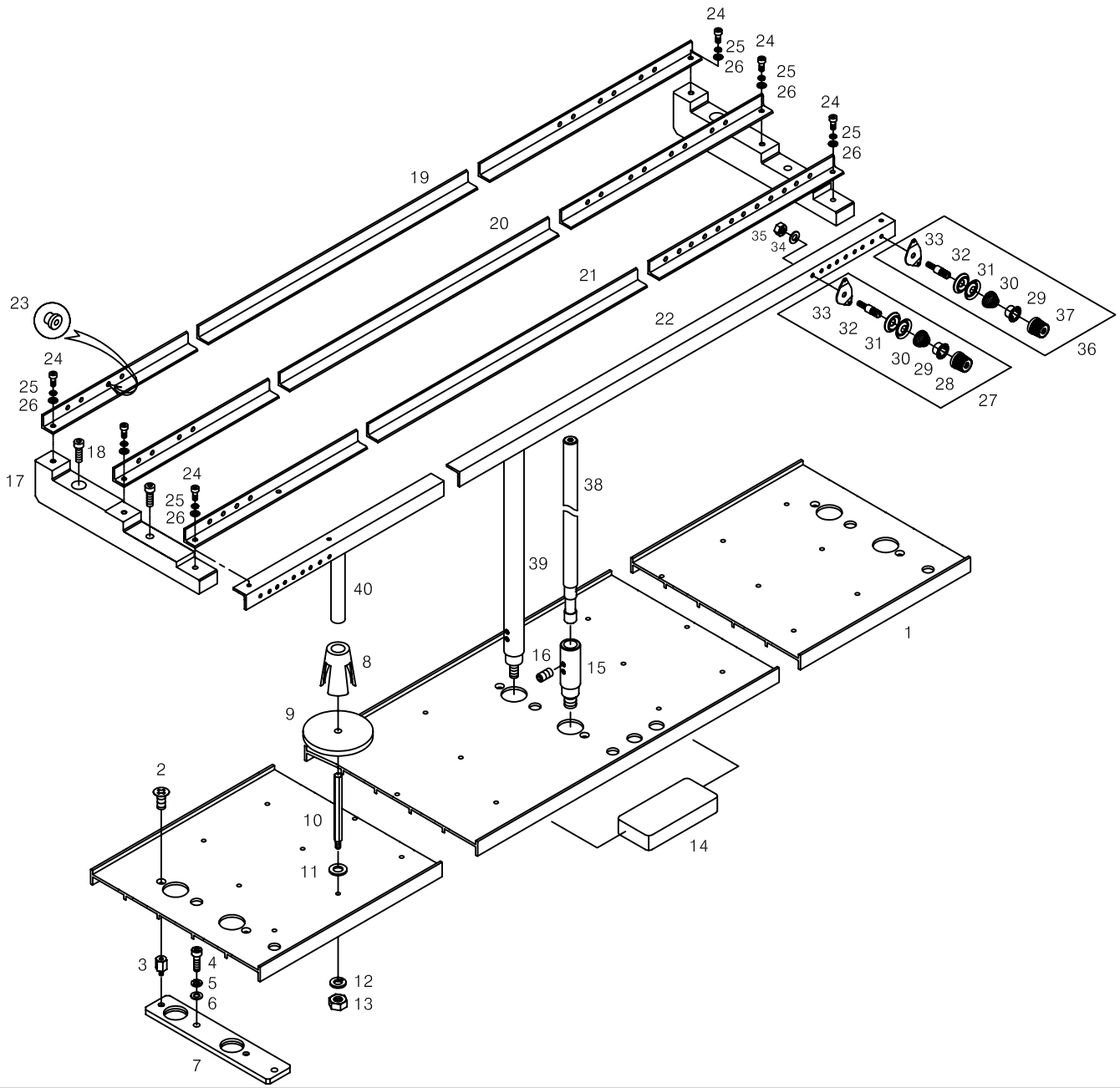

Ref.No	Part No.	Part Names		Q'ty
C-001	12001AD-UK02	Spool Plate (L=950)	(UK1202)	1
	12001AD-UK12	Spool Plate (L=1080)	(UK1502)	
	11000102UK00	Spool Plate(L=2080)	(UK604)	
	11001AD-UK01	Spool Plate(L=2080)	(UK1204)	
	11001AD-UK14	Spool Plate(L=2080)	(UK1504)	
	05100102UK00	Spool Plate (L=3020)	(UK606)	
	05100103UK00	Spool Plate (L=2950)	(UK906)	
	12001AD-UK06	Spool Plate (L=2950)	(UK1206)	
	12001AD-UK16	Spool Plate (L=2950)	(UK1506)	
	05100104UH00	Spool Plate L=2480	(UH1206C)	
	05100105UH00	Spool Plate L=2480	(UH1506C)	
	05100104UH08	SPOOL PLATE L=3280	(UH1208)	
	05100105UH80	SPOOL PLATE L=3280	(UH1508)	
C-002	02002SC-7119	Pluss Screw (M4*L8)		8
C-003	11005CW-UK01	Spool Plate Fixing Bolt M6*L21		8
C-004	03016SC-4113	Hex. Socket Bolt (M5*L15)		8
C-005	18048SW-3115	Spring Washer (@5)		8
C-006	18049SW-3111	Washer (@5)		8
C-007	11006PR-UK01	Spool Plate Base		4
C-008	12012PM-A001	Spool Holder		48
C-009	12052SF-A001	Spool Sponge		48
C-010	12009SC-A001	Spool Post		48
C-011	18049SW-3111	Washer (@5)		48
C-012	18048SW-3115	Spring Washer (@5)		48
C-013	12010SN-1211	Hex.Nut (M5)		48
C-014	12033RB-UK01	Cushion Rubber		1
C-015	12014SC-A001	Spool Stand Bolt		5
C-016	04014SC-4517	Hex.Socket Set Screw(M5*L5)		10
C-017	10600100H000	Thread Angle Frame		5
C-018	03016SC-4113	Hex. Socket Bolt (M5*L15)		5
C-019	12019AD-UK02	Angle "A" L=890	(UK1202)	1
	12019AD-UK12	Angle "A" L=1020	(UK1502)	
	05200304UK24	Angle "A" L=2020	(UK604)	
	11022AD-UK01	Angle "A" L=2020	(UK1204)	
	11022AD-UK14	Angle "A" L=2020	(UK1504)	
	05200102UK00	Angle (A) L=3020	(UK606)	
	05200103UK00	Angle (A) L=3020	(UK906)	
	12019AD-UK06	Angle (A) L=3020	(UK1206)	
	12019AD-UK16	Angle (A) L=3020	(UK1506)	
	05200104UH00	Angle "A" L=2420	(UH1206C)	

Ref.No	Part No.	Part Names		Q'ty
C-019	05200105UH00	Angle "A" L=2420	(UH1506C)	1
	05200104UH08	Angle "A" L=3220	(UH1208)	
	05200105UH80	Angle "A" L=3220	(UH1508)	
C-020	12020AD-UK02	Angle "B" L=890	(UK1202)	1
	12020AD-UK12	Angle "B" L=1020	(UK1502)	
	05200404UK24	Angle "B" L=2020	(UK604)	
	11023AD-UK01	Angle "B" L=2020	(UK1204)	
	11023AD-UK14	Angle "B" L=2020	(UK1504)	
	05200202UK00	Angle (B) L=3020	(UK606)	
	05200203UK00	Angle (B) L=3020	(UK906)	
	12020AD-UK06	Angle (B) L=3020	(UK1206)	
	12020AD-UK16	Angle (B) L=3020	(UK1506)	
	05200204UH00	Angle "B" L=2420	(UH1206C)	
	05200205UH00	Angle "B" L=2420	(UH1506C)	
	05200204UH08	Angle "B" L=3220	(UH1208)	
	05200205UH80	Angle "B" L=3220	(UH1508)	
C-021	05200104UK20	Angle "C" L=890	(UK1202)	1
	05200105UK20	Angle "C" L=1020	(UK1502)	
	05200104UK24	Angle "C" L=2020	(UK604)	
	05200104UK40	Angle "C" L=2020	(UK1204)	
	05200105UK40	Angle "C" L=2020	(UK1504)	
	05200104UK60	Angle "C" (L=3020)	(UK606)	
	05200303UK00	Angle "C" (L=3020)	(UK906)	
	05200105UK60	Angle "C" (L=3020)	(UK1206)	
	05200312UK00	Angle "C" (L=3020)	(UK1506)	
	05200314UH00	Angle "C" (L=2420)	(UH1206C)	
	05200315UH00	Angle "C" L=2420	(UH1506C)	
	05200304UH08	Angle "C" L=3220	(UH1208)	
	05200305UH80	Angle "C" L=3220	(UH1508)	
C-022	05200214UK20	Angle "D" L=890	(UK1202)	1
	05200215UK20	Angle "D" L=1020	(UK1502)	
	05200214UK24	Angle "D" L=2020	(UK604)	
	05200214UK40	Angle "D" L=2020	(UK1204)	
	05200215UK40	Angle "D" L=2020	(UK1504)	
	05200214UK60	Angle "D" (L=3020)	(UK606)	
	05200403UK00	Angle "D" (L=3020)	(UK906)	
	05200215UK60	Angle "D" (L=3020)	(UK1206)	
	05200412UK00	Angle "D" (L=3020)	(UK1506)	
	05200414UH00	Angle "D" (L=2420)	(UH1208)	
	05200415UH00	Angle "D" (L=2420)	(UH1508)	

C

Spool Stand

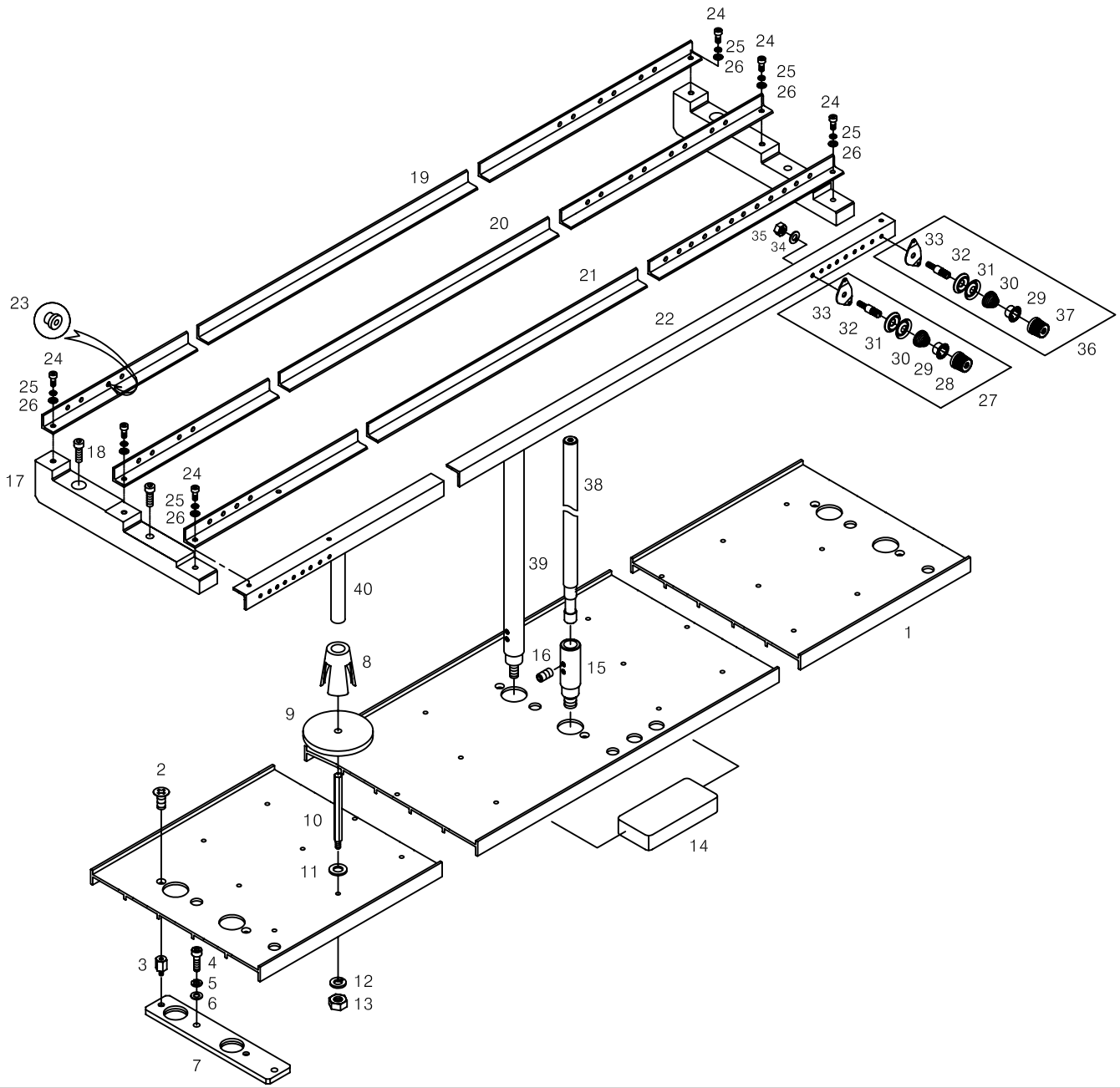

Ref.No	Part No.	Part Names	Q'ty
C-023	12042PM-A001	Eyelet	96
C-024	02015SC-7113	Hex.Socket Bolt(M4*L10)	15
C-025	02028SW-9115	Spring Washer (@4)	15
C-026	06003SW-2111	Washer (@4)	15
C-027	10600110B000	SUB TENSION ADJUSTING SET	44
C-028	08300600A000	SUB TENSION ADJUSTING NUT (A)	44
C-029	11088PM-A001	TENSION SPRING STOPPER	48
C-030	08301100A000	TENSION SPRING	48
C-031	11153PR-B001	Tension Disc @22	96
C-032	08301000A000	TENSION ADJUSTING STUD	48
C-033	11162PR-A001	TENSION PLATE	48
C-034	18048SW-3115	Spring Washer (@5)	48
C-035	03031SN-A001	Pin. Nut (11/64,N=40)	48
C-036	10600210B000	SUB TENSION ADJUSTING SET (black)	4
C-037	10600610A000	SUB TENSION ADJUSTING NUT (B) (black)	4
C-038	12015SF-A001	Spool Stand (L=330) (6,12C)	5
	01001500T000	Spool Stand (L=380) (15C)	
C-039	01001504U000	Spool Stand L=345 (UK604) (UK1204)	4
	01001505U000	Spool Stand L=395 (UK1204) (UK1504)	
	01001504U000	Spool Stand L=345 (UH1206C) (UH1506C)	
	01001505U000	Spool Stand L=395 (UH1506C)	
C-040	10000100A000	Thread Guide L=200	8

Ref.No	Part No.	Part Names	Q'ty

D

Main Drive System

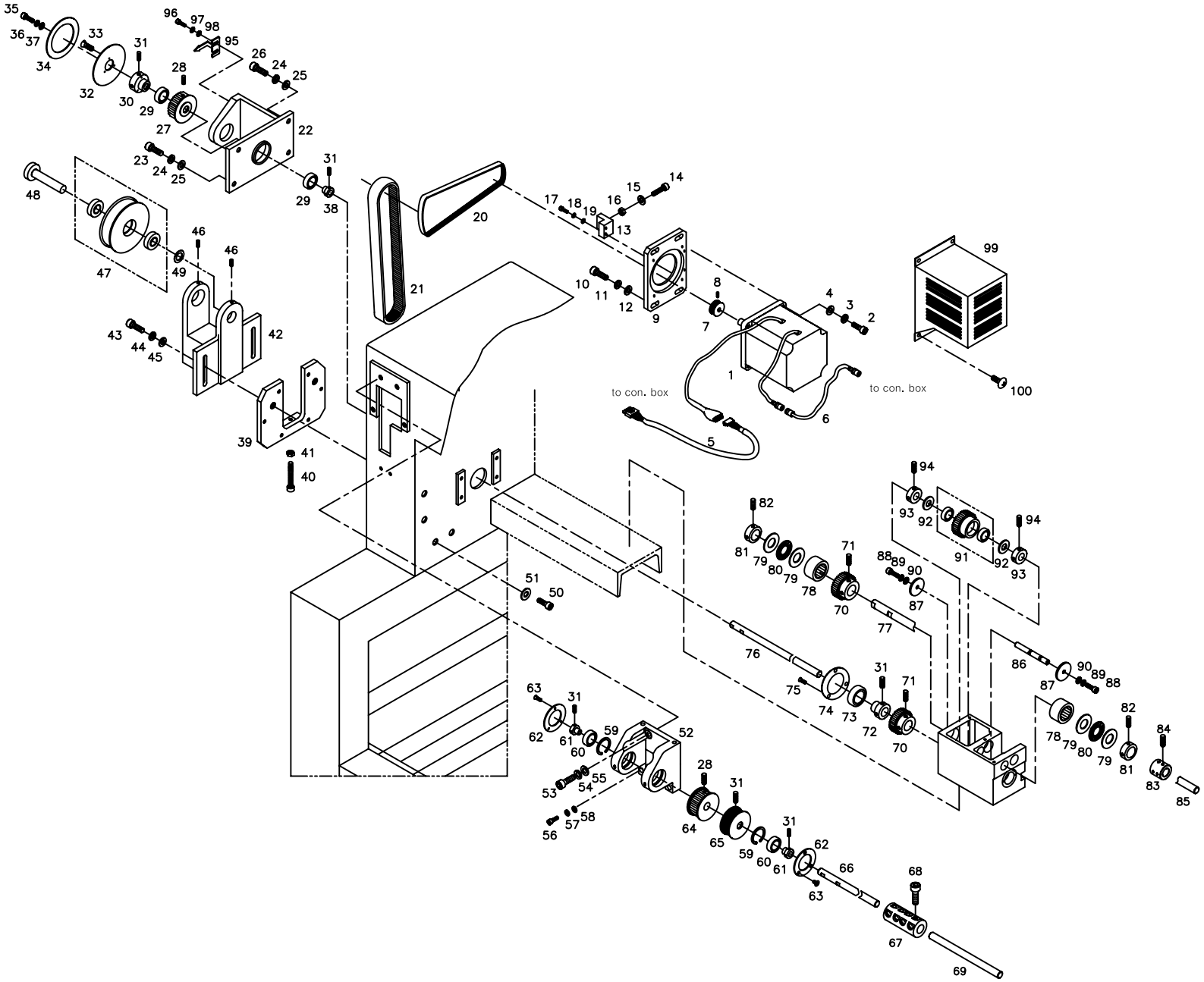

Ref.No	Part No.	Part Names	Q'ty
D-001	SFAM-600-003	Direct Motor	1
D-002	08062SC-7113	HEX. SOCKET BOLT (M5*L20)	4
D-003	18048SW-3115	Spring Washer (5@)	4
D-004	18049SW-3111	Washer (@5)	4
D-005	02106500U040	Sh-65-2	1
D-006	02106400U040	Cable (Sh-64-2)	1
D-007	03010800UH80	MAIN MOTOR PULLEY	1
D-008	04014SC-4517	Hex.Socket Set Screw(M5*L5)	2
D-009	GP-012897-00	Motor Fixing	1
D-010	08091SC-7113	HEX. SOCKET BOLT (M6*L20)	4
D-011	16014SW-4115	Spring Washer (@6)	4
D-012	08057SW-1111	Washer (@6)	4
D-013	03000900U000	Tension Adjusting Block	1
D-014	14063SC-A001	Tension Control Bolt (M6*L40)	1
D-015	08057SW-1111	Washer (@6)	1
D-016	08058SN-1311	Hex. Nut (M6-No3)	1
D-017	08062SC-7113	Hex. Socket Bolt (M5*L20)	2
D-018	18048SW-3115	Spring Washer (5@)	2
D-019	18049SW-3111	Washer (@5)	2
D-020	03100700H000	MAIN DRIVING BELT 290J*10R	1
D-021	03000200U000	Timing Belt (25-S5M*L1025)	1
D-022	03012100U000	Low Shaft Support Bracket	1
D-023	08091SC-7113	Hex. Socket Bolt (M6*L20)	2
D-024	16014SW-4115	Spring Washer (@6)	4
D-025	08057SW-1111	Washer (@6)	4
D-026	06025MC-7113	HEX.SOCKET BOLT(M6*L25)	2
D-027	03000130U000	Pulley (Tubular)	1
D-028	14061AF-4517	Hex.Socket Screw(M8*L8)	8
D-029	01029BR-A001	Ball Bearing (6004Zz)	2
D-030	13107CW-UK01	Collar	1
D-031	14060AF-4517	Hex.Socket Screw(M6*L6)	12
D-032	13053PR-UK01	Angle Plate Base	1
D-033	13061SC-8119	Plus Screw(M3*L10)	
D-034	13054ET-UK01	Angle Disk	1
D-035	14006SC-7113	Hex.Socket Set Screw(M8*L15)	1
D-036	15095SW-3115	Spring Washer (@8)	1
D-037	04029SW-A001	STUD BOLT WASHER(S) (@8)	1
D-038	14058CW-A001	Collar "A"	1
D-039	13123CW-E121	Idelr Plate	1
D-040	14063SC-A001	Tension Control Bolt (M6*L40)	2

Ref. No	Part No.	Part Names	Q'ty
D-041	13042SN-1111	Hex.Nut (M6*T5-R)	2
D-042	13118CS-UK01	Idler Support Bracket	1
D-043	14027SC-4113	Hex.Socket Bolt (M8*L30)	2
D-044	15095SW-3115	Spring Washer (@8)	2
D-045	08041SW-1111	Washer (@8-S)	2
D-046	14060AF-4517	HEX.SOCKET SCREW(M6*L6)	2
D-047	03000300U000	Idler	1
	13026BR-T121	Needle Bearing (6002Z)	2
D-048	13120CW-UK01	IDLER SHAFT	1
D-049	13106PR-UK01	Idler Spacer	1
D-050	16059SC-7113	Hex.Socket Bolt (M6*L12)	2
D-051	08057SW-1111	Washer (@6)	8
D-052	03101300UH80	UPPER SHAFT SUPPORT BRACKET	1
D-053	08087SC-7113	HEX. SOCKET BOLT (M8*L25)	2
D-054	15095SW-3115	SPRING WASHER (@8)	2
D-055	08041SW-1111	WASHER (@8-S)	2
D-056	14046SC-7113	HEX.SOCKET BOLT (M6*L30)	2
D-057	03026SW-9115	Spring Washer (@6)	2
D-058	08057SW-1111	WASHER (@6)	2
D-059	03010SR-4013	C-Ring (@47)	2
D-060	01001100H000	Ball Bearing (6005Zz)	2
D-061	03005210H000	Collar "A"	2
D-062	03101400U000	Upper Shaft Support Cover	2
D-063	22006SC-7113	HEX. SOCKET BOLT (M3*L8)	6
D-064	03000120U000	Pulley (Tubular)	1
D-065	03010800UH00	TOP SHAFT PULLEY	1
D-066	03000100UK20	Top Shaft (L1298) (UK1202)	1
	03000100UK40	Top Shaft (L2298) (UK1204)	
	03000100UK60	Top Shaft "A" (@20, L1505.5) (UK1206)	
	01000210UH60	Top Shaft L2698 (UH1506C)	
	01000210UH80	Top Shaft A L=2076 (UH1508)	
D-067	03006720HDK0	Coupling @20 (UK1206)(UH1508)	1
D-068	08091SC-7113	Hex. Socket Bolt (M6*L20) (UK1206)(UH1508)	4
D-069	03000200UK60	Top Shaft "B" (@20, L1800) (UK1206)	1
	01000220UH80	TOP SHAFT B L=1479 (UH1508)	
D-070	13032GA-UK06	Index Shaft Gear Uk06	2
D-071	04012AF-A001	Hook Shaft Bush Screw	11
D-072	01102000B000	Bearing Bushing	1
D-073	04026BR-A001	Ball Bearing 6003Z	1
D-074	04039PR-A001	Bearing Cover	1

D

Main Drive System

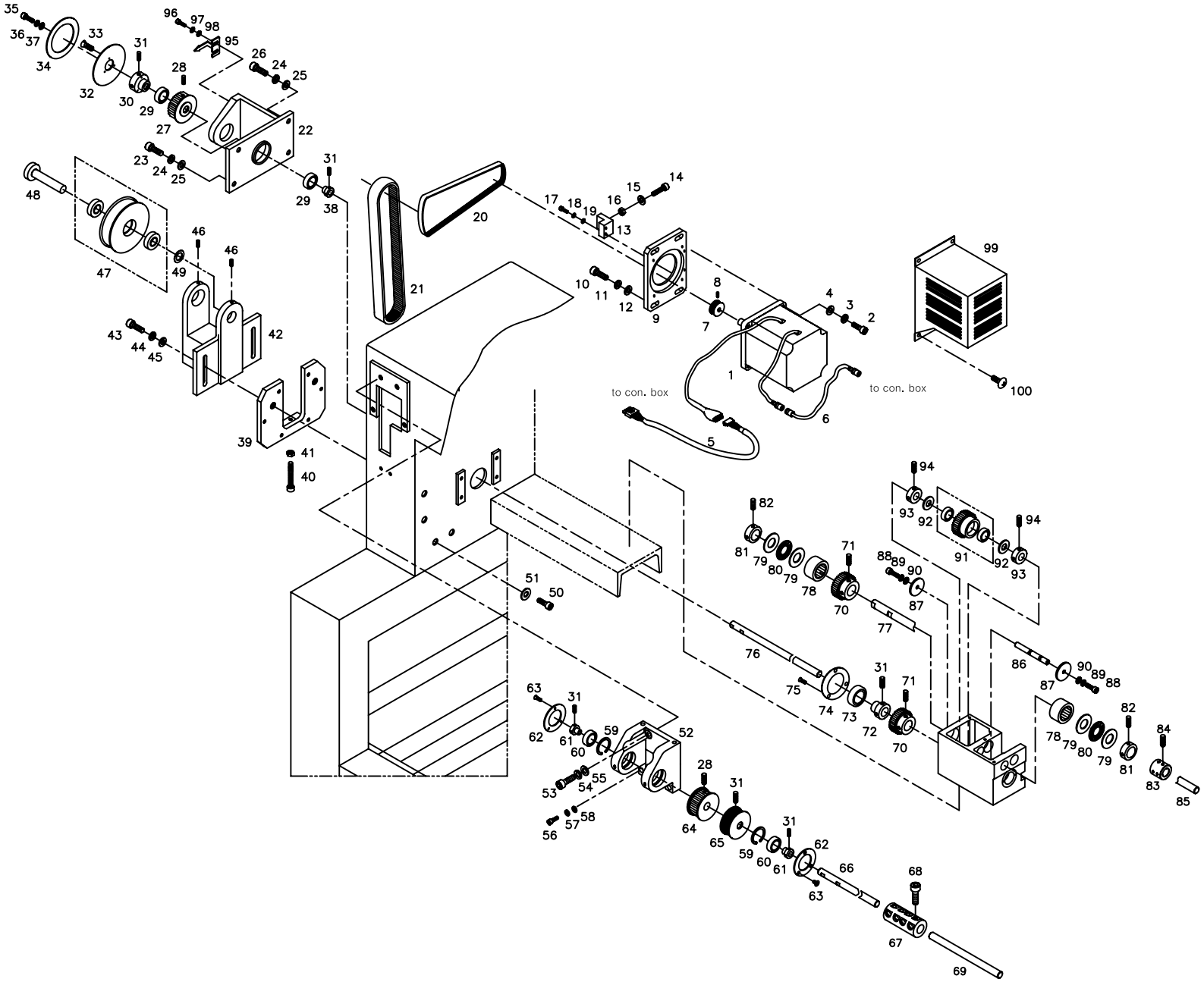

Ref.No	Part No.	Part Names		Ref.No
D-075	21002SC-8119	PLUS SCREW (M3*L8)		3
D-076	03100600UK40	INDEX SHAFT		1
D-077	03000200UK20	Low Shaft (L=804)	(UK1202)	1
	03000200UK40	Low Shaft	(UK1204)	
	23003SH-UK06	Low Shaft "A" @15 L=1418	(UK1206)	
	02000110UH60	Low Shaft L2303	(UH1506C)	
	02000100UH80	Low Shaft A 1650	(UH1508)	
D-078	04027BR-A001	Needle Bearing (Hmk1515)		2
D-079	08028BR-A001	Thrust Washer (As 1528)		4
D-080	08027BR-A001	Thrust Bearing (Ntb 1528)		2
D-081	03704900A000	Cam Shaft Collar		2
D-082	04016AF-A001	Cam Collar Screw		4
D-083	14079CW-UK06	Lower Shaft Coupling	(UK1206)(UH1508)	1
D-084	14060AF-4517	Hex.Socket Screw(M6*L6)	(UK1206)(UH1508)	4
D-085	03000300UK60	Low Shaft B (@15, L1385)	(UK1206)	1
	02000200UH80	Low Shaft B 1448	(UH1508)	
D-086	13041SH-UK01	Middle Shaft		1
D-087	08053PR-A001	Lever Washer		2
D-088	02023SC-7113	Hex. Socket Bolt (M4*L8)		2
D-089	02028SW-9115	Spring Washer (@4)		2
D-090	05009SW-1111	Washer (@4-L)		2
D-091	13036BR-UK01	Needle Bearing (63800Zz)		2
D-092	12019BR-T121	Fiber Washer R-Tw1020		2
D-093	13038CW-UK01	Collar "C"		2
D-094	03022SC-4517	Hex. Socket Set Screw(M4*L5)		4
D-095	03012210U000	INDICATOR		1
D-096	02015SC-7113	HEX.SOCKET BOLT(M4*L10)		2
D-097	02028SW-9115	SPRING WASHER (@4)		2
D-098	18015SW-3111	Washer (4@)		1
D-099	GP-012973-00	Main Motor Cover		1
D-100	02044SC-3123	Truss Screw (M5*L8)		4

Ref. No	Part No.	Part Names	Q'ty

Bed I

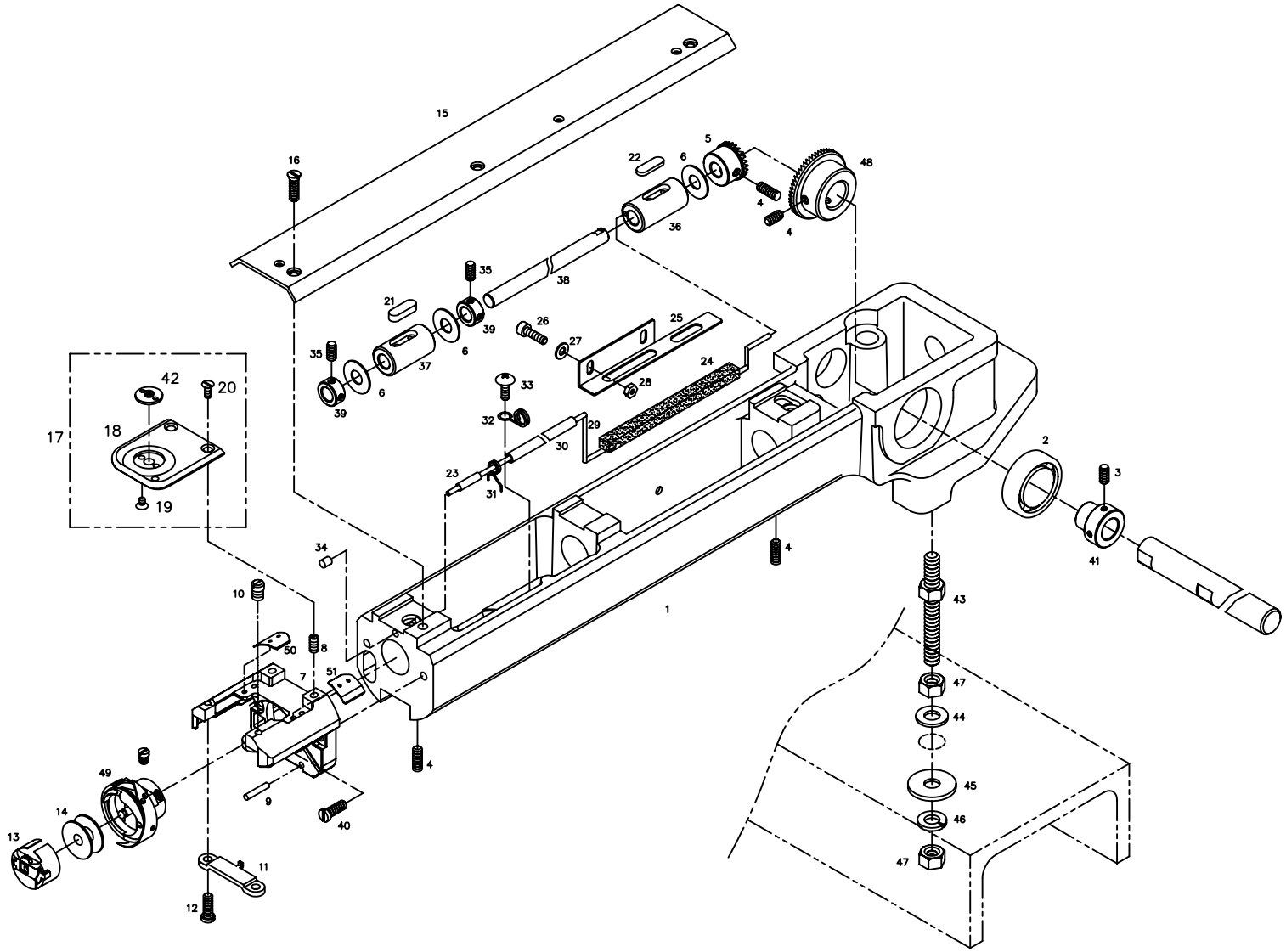
15
16
22
6
5
48
4
4
36
35
38
21
39
26
25
27
35
37
6
24
28
33
6
39
32
29
30
42
20
17
18
19
23
31
2
3
41
34
4
10
43
1
50
8
7
51
47
44
49
4
45
9
14
40
46
13
11
47
12

Ref.No	Part No.	Part Names	Q'ty
E-001	GP-005355-00	Bed "A"	3
	01110000U000	Bed (Set) #1 (UH1508)	8
E-002	04026BR-A001	Ball Bearing 6003Z	4
E-003	04016AF-A001	Cam Collar Screw	8
E-004	04012AF-A001	Hook Shaft Bush Screw	24
E-005	04019GA-UK01	Hook Shaft Gear	4
E-006	02004BR-T121	Hook Shaft Bearing Washer	12
E-007	GP-005357-01	Needle Plate Bracket	4
E-008	02008SC-4122	Needle Plate Bracket Screw	8
E-009	02009PI-T121	Spring Pin	8
E-010	04026SC-T121	Needle Plate Pin	4
E-011	GP-005358-01	Rotary Hook Support	4
E-012	02011SC-3125	Rotary Hook Support Screw	8
E-013	04034AF-A001	Bobbin Case Set	4
E-014	04035AF-A001	Bobbin	4
E-015	GP-005359-02	Bed Cover	3
E-016	02030SC-T121	Bed Cover Screw(9/64" 40)	12
E-017	02019BM-T121	Needle Plate Set(Cap)	4
E-018	02019PR-T121	Needle Plate(Cap)	4
E-019	04007SC-A001	Cushion Cover Screw (M3*L2.3)	8
E-020	04004AF-A001	Needle Plate Screw	8
E-021	32043SF-T121	Front Bushing Felt	4
E-022	18039SF-UK01	Felt	4
E-023	32045CW-T121	Oil Hose Pin	4
E-024	18041SF-UK01	Bed Felt	4
E-025	32040PR-T121	Bed Felt Cover	3
E-026	02015SC-4113	Hex. Socket Bolt (M4*L8)	8
E-027	02063SW-1111	Washer(@4)	8
E-028	05016SN-1211	Hex.Nut (M4)	8
E-029	18044ET-UK01	Wick	4
E-030	18045ET-UK01	Oil Tube	4
E-031	32046SP-T121	Holder For Oil Hose	4
E-032	32021SP-T121	Needle Bar Hose Holder "B"	4
E-033	28021SC-3123	Truss Screw (M3*L4)	4
E-034	32047RB-T121	Oil Rubber Cap	4
E-035	08113SC-A001	Collar Screw	16
E-036	GP-016953-00	Hook Shaft Rear Bushing	4
E-037	GP-016931-00	Hook Shaft Front Bushing	4
E-038	02100300U000	Hook Shaft	4
E-039	03707300A000	Solenoid Collar	8

Ref. No	Part No.	Part Names	Q'ty
E-040	04037SC-A001	Picker Bracket Screw(R)	8
E-041	01102000B000	Bearing Bushing	4
E-042	GP-010385-00	NEEDLE GUIDE PLATE(FLAT)	4
E-043	04028SC-UK01	STUD BOLT (M10*P1.25*L69)	12
E-044	04013PR-B001	WASHER (3.2T,@10)	4
E-045	04014PR-B001	WASHER (2T,@10)	4
E-046	01008SW-9115	SPRING WASHER(@10)	4
E-047	04032SN-UK01	HEX. NUT (M10*P1.25)	8
E-048	01101700U000	Low Shaft Gear	4
	04017GA-UK01	Low Shaft Gear (UH1508)	8
E-049	04033AF-D002	Rotary Hook Set	4
E-050	GP-012800-00	Needle Plate Guide(L)	4
E-051	GP-012801-00	Needle Plate Guide(R)	4

F

Bed II

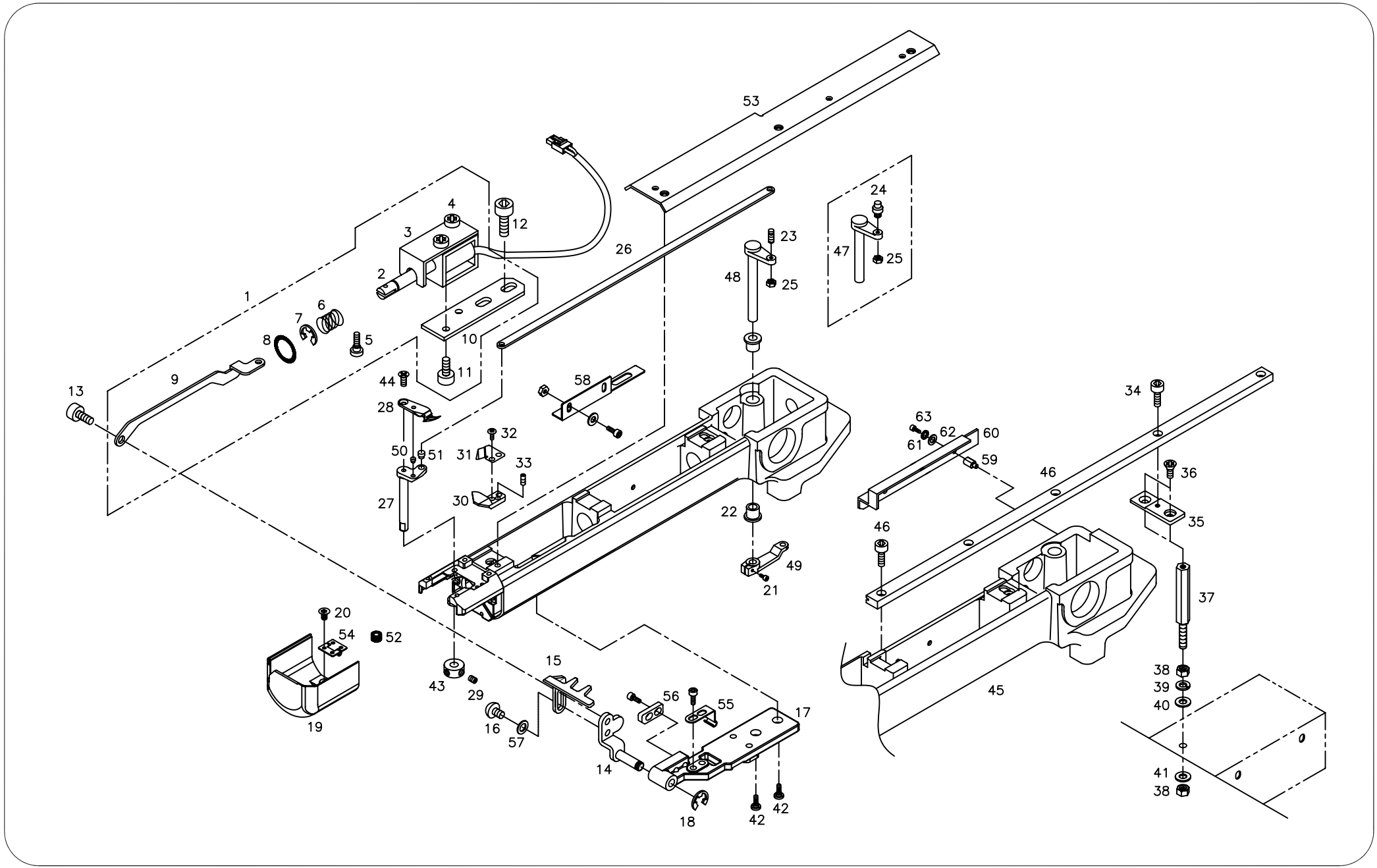
53
4
3
12
2
26
24
23
47
25
48
25
1
6
7
8
5
10
9
11
44
58
13
28
34
63
62
60
61
32
50
51
31
33
59
46
36
27
30
22
35
46
49
21
37
20
54
52
15
43
29
56
55
17
38
39
40
19
16
57
14
45
41
38
18
42
42

Ref.No	Part No.	Part Names		Q'ty
F-002	AS-002025-00	Picker Sol. Set		4
F-003	10009EL-T121	Picker Sol.		4
F-004	01-012A-AT10	Picker Sol. Cover		4
F-005	28021SC-3123	Truss Screw (M3*L4)		8
F-006	10021SC-A001	Sol. Stud Screw		4
F-007	10011SP-A001	Sol. Spring		4
F-008	13044SR-4013	E-Ring (@4)		4
F-009	10012RB-A001	Cushion Washer		4
F-010	GP-005370-00	Connecting Plate		4
F-011	01-013A-AT10	Picker Sol. Base		4
F-012	06010AF-8118	Plus Screw(M3*L4)		8
F-013	02015SC-7113	Hex.Socket Bolt(M4*L10)		8
F-014	08012CW-T121	Connecting Plate Stud Screw		4
F-015	AS-001429-00	Picker Base Ass'Y		4
F-016	GP-005368-00	Picker		4
F-017	07018SC-8118	Plus Screw (M3*L8)		8
F-018	GP-005366-00	Picker Bracket		4
F-019	15159SR-4013	E-Ring (3@)		4
F-024	GP-005360-01	Hook Cover		4
F-025	08014AF-A001	Plus Screw (M3*L8)		8
F-027	02015SC-7113	Hex.Socket Bolt(M4*L10)		4
F-028	07021MP-T121	Lever Shaft Bush		8
F-031	07023CW-T121	Lever Pin "A"		3
F-032	08122CW-UK01	Lever Pin "B"	(UK1202,UK1204,UH1506C)	1
F-033	02029SN-9311	Hex. Nut (M4-No2)		4
F-034	07006LA-UK01	Mes Connecting Link		4
F-035	GP-006638-00	Moving Mes Shaft		4
F-036	07028PR-T121	Moving Mes		4
F-039	03022SC-4517	Hex. Socket Set Screw(M4*L5)		8
F-040	07032CL-T121	Fixed Mes		4
F-041	07033PR-T121	Under Thread Presser		4
F-042	07018SC-8118	Plus Screw (M3*L8)		8
F-043	03050SC-4517	Hex. Socket Set Screw (M3*L3)		4
F-046	02023SC-7113	Hex. Socket Bolt (M4*L8)	(UK1204,UH1506C)	2
F-047	GP-008126-00	Rail Support Plate	(UK1204,UH1506C)	2
F-048	16022AF-8119	Plus Screw(M6*L20)	(UK1204,UH1506C)	4
F-049	16021CW-A001	Table Support Stud	(UK1204,UH1506C)	4
F-050	04032SN-A001	Hex. Nut (M8-No2)	(UK1204,UH1506C)	4
F-051	15095SW-3115	Spring Washer (@8)	(UK1204,UH1506C)	4
F-052	04029SW-A001	Stud Bolt Washer(S) (@8)	(UK1204,UH1506C)	4

Ref. No	Part No.	Part Names		Q'ty
F-053	04030SW-A001	Stud Bolt Washer(L) (@8)	(UK1204,UH1506C)	4
F-054	116410S-8118	Driver Screw 11/64-40,L10		4
F-055	13003000T000	Mes Shaft Collar		4
F-056	08014SC-A001	Plus Screw (M3*L8)		4
F-057	GP-005356-01	Bed	(UK1204,UH1506C)	1
F-058	03200100UH00	Rail Guide	(UK1204,UH1506C)	1
F-064	03001200U000	Mes Driving Lever Shaft "B"	(UK1202,UK1204,UH1506C)	1
F-065	03001100U000	Mes Driving Lever Shaft "A"		3
F-066	02100400U000	Mes Driving Lever		4
F-067	08122CW-A001	MES PIN		4
F-068	08123CW-T121	MOVING MES CONNECTING LINK PIN		4
F-069	GP-005361-00	Hook Cover Insert		8
F-070	GP-006619-01	Rail Guide Bed Cover		1
F-071	HG-000001-00	Hook Cover Hinge		4
F-072	GP-005362-00	Hook Cover Holder		4
F-073	GP-005369-01	Picker Stopper		4
F-074	WS-000085-00	Washer for Picker Base		4
F-075	GP-006670-00	Bed Felt Cover A	(UK1204,UH1506C)	1
F-076	03200200UH00	Rail Guide Cover Stud		2
F-077	03200300UH00	Rail Guide Cover		1
F-078	18014SW-3115	Spring Washer (@4-No2)		2
F-079	18015SW-3111	Washer (4@)		2
F-080	02023SC-7113	Hex. Socket Bolt (M4*L8)		4

G Thread Cutting Drive System

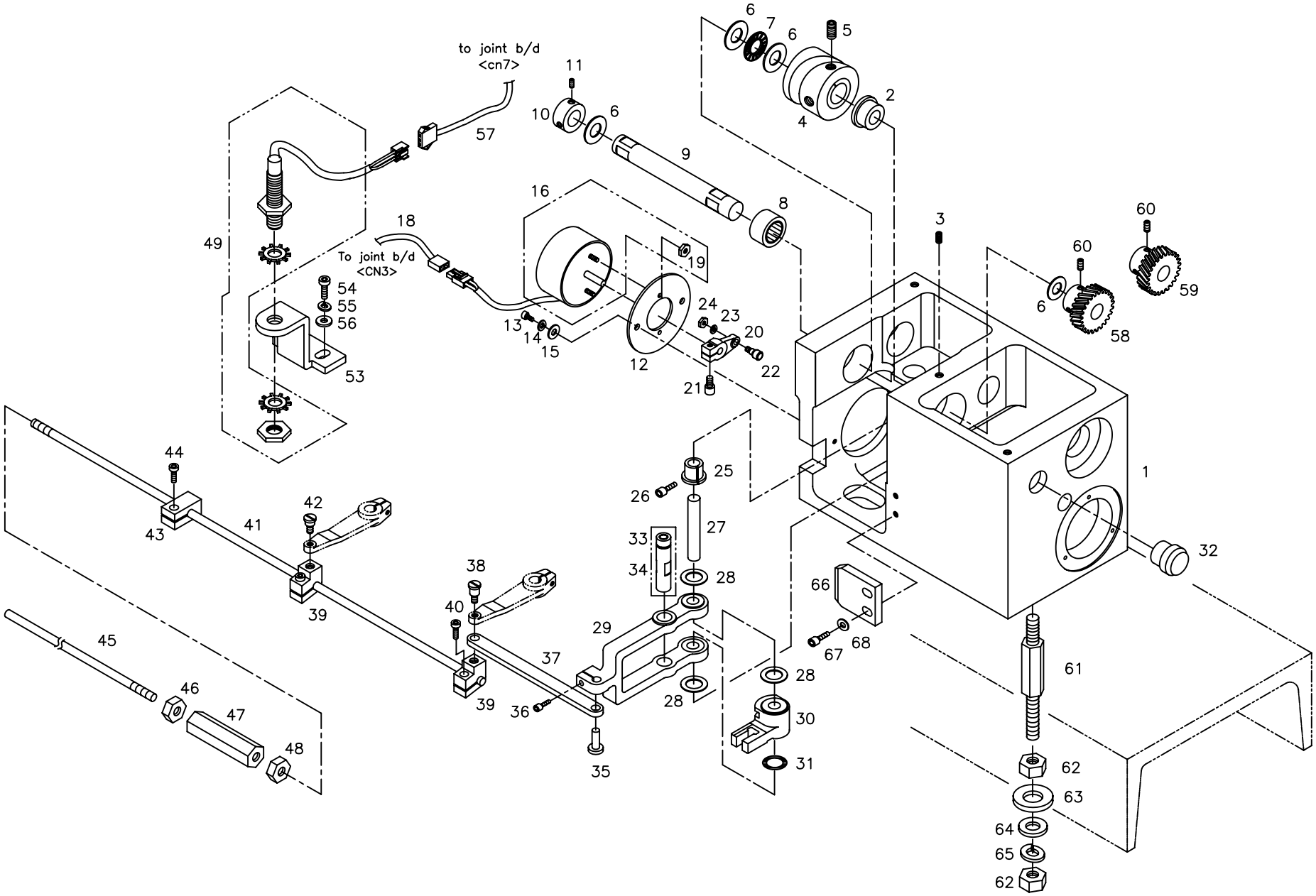

Ref.No	Part No.	Part Names		Q'ty
G-001	GP-011445-00	Mes Cam Driving Box		1
G-002	08042MP-UK01	Mes Cam Shaft Bush		1
G-003	04014SC-4517	Hex. Socket Set Screw(M4*L5)		1
G-004	07034CM-UK01	Mes Cam		1
G-005	14005SC-4517	HEX.SOCKET SET SCREW (M8*L8)		2
G-006	08028BR-A001	Thrust Washer (As 1528)		4
G-007	08027BR-A001	Thrust Bearing (Ntb 1528)		1
G-008	04027BR-A001	Needle Bearing (Hmk1515)		1
G-009	07038CW-UK01	Mes Cam Shaft		1
G-010	03704900A000	Cam Shaft Collar		1
G-011	04016AF-A001	Cam Collar Screw		2
G-012	07015PR-UK01	Solenoid Plate		1
G-013	02031SC-7113	Hex. Socket Screw(M5*L10)		2
G-014	18048SW-3115	Spring Washer (5@)		2
G-015	18049SW-3111	Washer (@5)		2
G-016	08068EL-UK01	Thread Trimming Solenoid Ass'		1
G-018	25026EL-UK02	Cable (25-26) 2Head	(UK1202)	1
	25027EL-UK01	Sol. Connecting Cable (4Ht-27)	(UK1204)(UH1506C)	
	25023EL-UK06	Cable (25-23)	(UK1206)	
	02102600UH80	CABLE (SH-26-4)	(UH1508)	
G-019	11014SN-1211	Hex.Nut (M3-No2)		2
G-020	07017CL-UK01	Solenoid Crank		1
G-021	03071SC-7113	Hex. Socket Bolt (M3*L10)		1
G-022	08048AF-T121	Solenoid Crank Roller		1
G-023	18014SW-3115	Spring Washer (@4-No2)		1
G-024	08050SN-T121	Hex. Nut		1
G-025	08203000A000	Take-Up Lever Shaft Bush(L)		1
G-026	02014SC-7113	Hex. Socket Bolt (M4*L5)		1
G-027	07025CW-UK01	Lever Shaft (@8*L70)		1
G-028	07024BR-UK01	Fiber Washer(R-Tw0805)		3
G-029	07028CL-UK01	Mes Driving Lever		1
G-030	07029CL-UK01	Mes Driving Crank		1
G-031	08022RB-T121	O-Ring (@10)		1
G-032	08071RB-UK01	Thread Driver Box Ruber		1
G-033	07030AF-UK01	Roller		1
G-034	07026CW-UK01	Roller Shaft		1
G-035	08034CW-UK01	Lever Connecting Pin		1
G-036	04010MC-7113	Hex.Socket Bolt (M4*L10)		1
G-037	03000700TH00	Thread Lever Connect Link		1
G-038	08016CW-UK01	Link Stud Bolt		1

Ref. No	Part No.	Part Names		Q'ty
G-039	08023CL-UK01	Mes Shaft Cramp		4
G-040	02015SC-7113	Hex.Socket Bolt(M4*L10)		4
G-041	23004SH-UK02	Mes Driving Shaft @6,L520	(UK1202)	1
	23004SH-UK01	Mes Driving Shaft	(UK1204)	
	23006SH-UK06	Mes Driving Shaft "A" L=1255	(UK1206)	
	02000300UH60	MES DRIVING SHAFT L2020	(UH1506C)	
	02000300UH80	Mes Driving Shaft "A" L1443	(UH1508)	
G-042	08019CW-UK01	Clamp Stud Bolt		3
G-043	08023CW-A001	Mes Shaft Cramp		1
G-044	02015SC-7113	Hex.Socket Bolt(M4*L10)		1
G-045	23007SH-UK06	Mes Driving Shaft "B" L=1255	(UK1206)	1
	02000400UH80	MES DRIVING SHAFT "B" L1377	(UH1508)	
G-046	17051SN-A001	Mes Priving Shaft Joint		1
G-047	13042SN-1111	Hex.Nut (M6*T5-R)		1
G-048	17053SN-1111	Hex. Nut(L) (M6*T5-L)		1
G-049	08102EL-A001	Zero Point Sensor Ass'Y		1
G-053	08070PR-UK01	Sensor Bracket		1
G-054	02031SC-7113	Hex. Socket Screw(M5*L10)		2
G-055	18048SW-3115	Spring Washer (5@)		2
G-056	18049SW-3111	Washer (@5)		2
G-057	25039EL-UK02	Cable (25-39) 2Head	(UK1202)	1
	25043EL-UK01	Sensor To Joint Con.(4Ht-43)	(UK1204)(UH1506C)	
	25039EL-UK06	Cable (25-39)	(UK1206)	
	02104400UH80	CABLE (SH-44-5)	(UH1508)	
G-058	07041GA-UK01	Gear "A"		1
G-059	07043GA-UK01	Gear "B"		1
G-060	04012AF-A001	Hook Shaft Bush Screw		4
G-061	08025CW-UK01	Box Stud Bolt		3
G-062	04032SN-A001	Hex. Nut (M8-No2)		6
G-063	04030SW-A001	Stud Bolt Washer(L) (@8)		3
G-064	04029SW-A001	Stud Bolt Washer(S) (@8)		3
G-065	15095SW-3115	Spring Washer (@8)		3
G-066	08021PM-UK01	Lever Stopper		1
G-067	02015SC-7113	Hex.Socket Bolt(M4*L10)		2
G-068	18015SW-3111	Washer (4@)		2

H1

Arm I

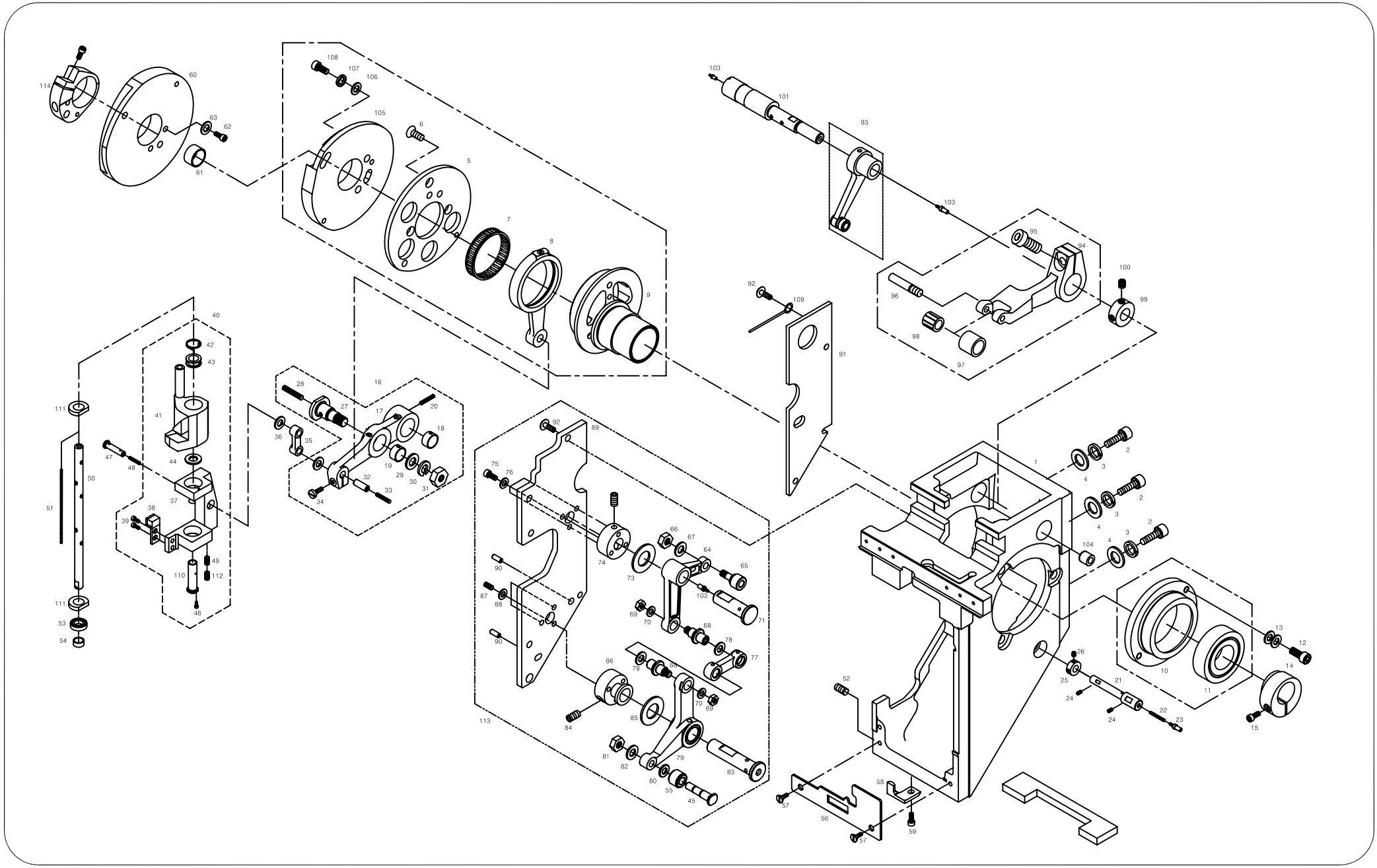
114
60
63
62
61
108
107
106
105
6
5
7
8
9
103
101
93
103
95
94
100
99
96
98
97
92
109
91
40
42
43
41
111
47
48
44
50
51
37
38
39
49
110
112
46
111
53
54
28
27
16
17
20
18
36
35
19
29
30
31
32
33
34
92
89
75
76
74
73
66
67
64
65
90
87
88
103
69
70
71
68
78
77
90
86
79
70
69
85
84
113
81
82
80
55
45
83
1
2
3
4
104
13
12
14
10
11
26
25
21
24
22
23
24
15
52
58
57
56
59

Ref.No	Part No.	Part Name	Q'ty
H1001	GP-011943-00	ARM	4
H1002	03003SC-4113	Hex. Socket Bolt	12
H1003	15095SW-3115	Spring Washer (@8)	12
H1004	04029SW-A001	Stud Bolt Washer(S) (@8)	12
H1005	GP-011938-00	CAM BASE	4
H1006	03007SC-A001	Cam Base Screw	12
H1007	03302900H000	NEEDLE CASE (KT-42469)	4
H1008	03303000H000	Connecting Rod	4
H1009	GP-011932-00	NEEDLE BAR DRIVING CAM	4
H1010	03303100H000	Bearing Case A @20	4
H1011	01001100H000	Ball Bearing (6005Zz)	4
H1012	02031SC-7113	Hex. Socket Screw(M5*L10)	4
H1013	02030SW-B001	Washer (5@)	24
H1014	03000110H000	Cam Tightening Collar (@20)	4
H1015	03016SC-4113	Hex. Socket Bolt (M5*L15)	4
H1016	03313200I000	NEEDLE BAR DRIVE LEVER(SET)	4
H1017	03000200A000	NEEDLE BAR DRIVE LEVER	4
H1018	03307200A000	Needle Driving Lever Bushing	4
H1019	03307300A000	Needle Driving Lever Bushing	4
H1020	32003ET-T121	Wick	4
H1021	03301800U000	NEEDLE BAR DRIVE PIN	4
H1022	32003ET-T121	Wick	4
H1023	01301600H000	Hook Oil Supply Nipple	8
H1024	03020SC-A001	Drive Pin Screw 11/64,N40,L8	4
H1025	01101300A000	Hook Shaft Collar	8
H1026	04012AF-A001	Hook Shaft Bush Screw	4
H1027	03023SC-A001	Connecting Rod Stud	4
H1028	32003ET-T121	Wick	4
H1029	03025SW-1211	Washer (@6)	4
H1030	03026SW-9115	Spring Washer (@6)	4
H1031	03027SN-A001	Stud Nut	4
H1032	03303300H000	Lever Pin	4
H1033	32003ET-T121	Wick	4
H1034	02015SC-7113	Screw(M4*L10)	4
H1035	03003200A000	Needle Bar Drive Rink	4
H1036	03034SW-A001	Reciprocator Washer	4
H1037	03600100I000	Needle Bar Driving Shaft Driver	4
H1038	03047PM-CT01	Stopper-A'ssy	4
H1039	26006MC-8118	Stopper Screw (M2.6*L6)	8
H1040	AS-003447-00	Needle Bar Reciprocator A'ssy	4

Ref. No	Part No.	Part Name	Q'ty
H1041	03600200I000	Needle Bar Reciprocator	4
H1042	03045SP-B001	Jump Spring	4
H1043	03046CW-B001	Jump Spring Guide	4
H1044	03048SW-A001	Reciprocator Washer	4
H1045	PN-000185-00	Presser Foot Stopper Roller Hinge Pin	4
H1046	09005SC-3123	Truss Screw (M3*L6)	4
H1047	03033CW-A001	Driver Pin	4
H1048	32003ET-T121	Wick	4
H1049	03020SC-A001	Drive Pin Screw 11/64,N40,L8	4
H1050	GP-013117-00	Needle Bar Driving Shaft	4
H1051	32003ET-T121	Wick	4
H1052	03020SC-A001	Drive Pin Screw 11/64,N40,L8	4
H1053	03008000H000	Ball Bearing 6800	4
H1054	03008100K000	Needle Bar Drive Bearing Bush	4
H1055	GP-011031-00	Presser Foot Stopper Roller	4
H1056	03302600I000	Arm Bearing Guide Plate	4
H1057	05062SC-A001	Bolt (9/64" n=40)	8
H1058	03056CL-B001	Head Rail Holder	4
H1059	03057SC-A001	Head Rail Holder Screw	4
H1060	GP-014781-00	PRESSER FOOT DRIVING CAM	4
H1061	GP-014939-00	Cam Spacer	4
H1062		Screw	12
H1063		Washer	12
H1064	GP-014782-00	PRESSER FOOT DRIVING LEVER A SET	4
H1065	AS-000392-00	Presser Foot Driving Roller Hinge Pin Assy'	4
H1066	15029SN-3211	Nut (@4)	4
H1067	18015SW-3111	Washer (@4)	4
H1068	03800300I000	Presser Foot Driving Lever Pin (C)	4
H1069	03031SN-A001	Nut (11/64" n=40)	4
H1070	18048SW-3115	Washer	4
H1071	03800400I000	PRESSER FOOT DRIVING LEVER PIN A	4
H1072	14060AF-4517	Hex. Socket Bolt (M6*L6)	4
H1073	16014SW-4115	Washer	4
H1074	03800500I000	Presser Foot Driving Lever Bracket (A)	4
H1075	03071SC-7113	HEX. SOCKET BOLT (M3*L10)	12
H1076	11019SW-9115	Washer (@3)	12
H1077	03800600I000	Presser Foot Drving Lever Connecting Link	4
H1078	03034SW-A001	Washer	8
H1079	AS-002051-01	PRESSER FOOT DRIVING LEVER B SET	4
H1080	WS-000108-00	Presser Foot Stopper Roller Washer	4

H1

Arm I

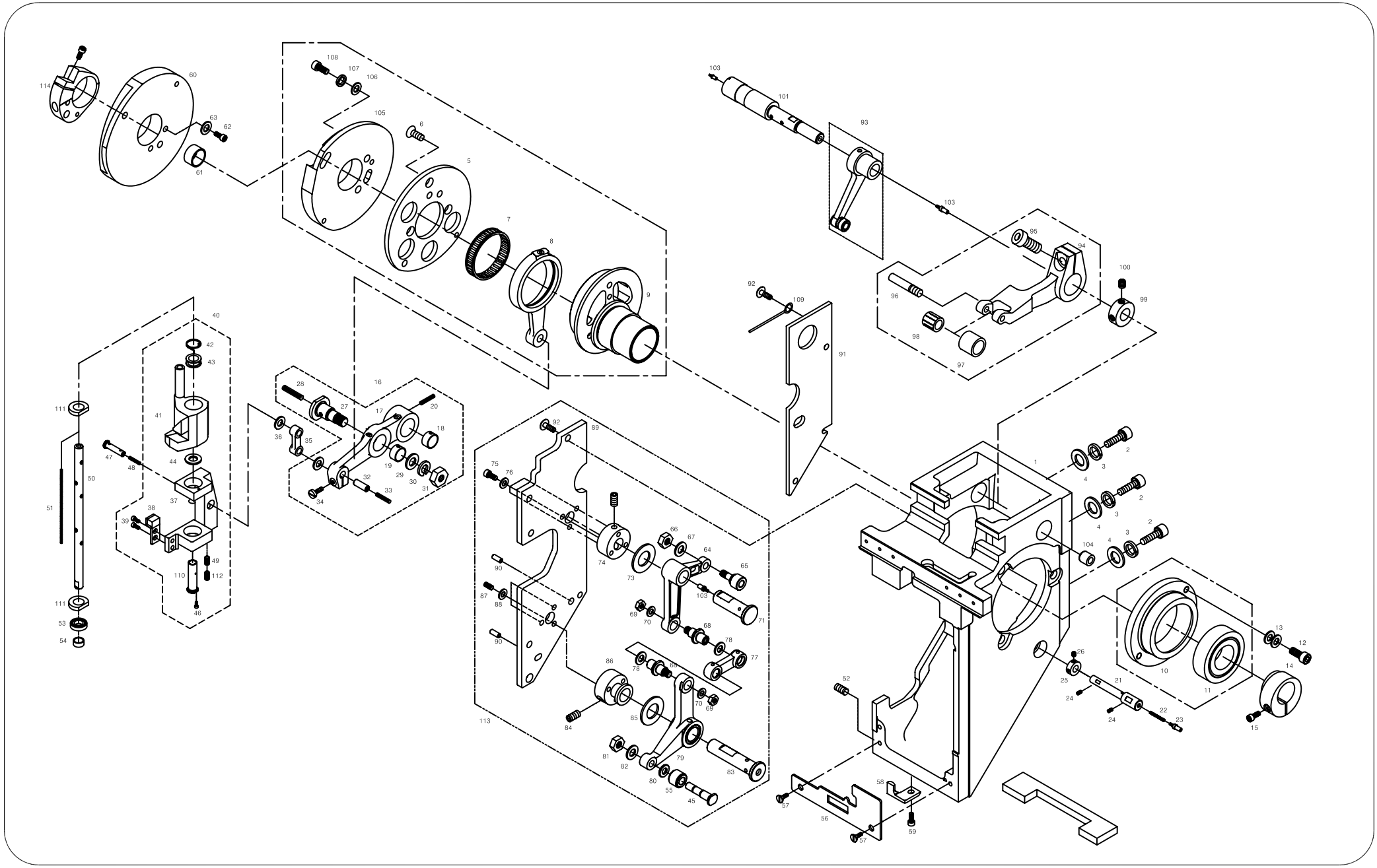
114
60
63
62
61
108
107
106
105
6
5
7
8
9
103
101
93
103
95
94
100
99
96
98
97
92
109
91
40
42
43
41
111
47
48
44
50
51
37
38
39
49
110
112
46
111
53
54
28
27
16
17
20
18
36
35
19
29
30
31
32
33
34
92
89
75
76
74
73
66
67
64
65
90
87
88
103
69
70
71
68
78
77
90
86
79
70
69
85
84
113
81
82
80
55
45
83
1
2
3
4
104
13
12
14
10
11
26
25
21
24
22
23
24
15
52
58
57
56
59

Ref.No	Part No.	Part Names	Q'ty
H1081	15029SN-3211	Nut (@4)	4
H1082	18015SW-3111	Washer (@4)	4
H1083	PN-000218-00	PRESSER FOOT DRIVING LEVER PIN B	4
H1084	14060AF-4517	Hex. Socket Bolt (M6*L6)	4
H1085	02004BR-T121	Washer	4
H1086	03801000I000	Presser Foot Driving Lever Bracket (B)	4
H1087	03071SC-7113	HEX. SOCKET BOLT (M3*L10)	12
H1088	06011SW-2111	Washer (@3)	12
H1089	03302200I000	ARM SIDE COVER A	4
H1090	03302300I000	Base Pin for Arm Side Cover	8
H1091	GP-011912-00	ARM SIDE COVER B	4
H1092	02010SC-A001	SCREW (9/64,N40,L8)	8
H1093	02010SC-A001	Take-Up Driving Lever "A"	4
H1094	GP-011914-00	Take-Up Driving Lever "B"	4
H1095	07016SC-7113	Hex.Socket Bolt(M4*L12)	4
H1096	04019CW-T121	Pin Stud Screw	4
H1097	04020AF-T121	Roller for Take-Up Lever B	4
H1098	04021BR-T121	Needle Bearing (KT367N IKO)	4
H1099	03302100A000	Pin Collar	4
H1100	03022SC-4517	Hex.Socket Set Screw(M4*L5)	8
H1101	03301000B000	TAKE-UP LEVER PIN	4
H1102	32003ET-T121	Wick	4
H1103	01301600H000	Hook Oil Supply Nipple	12
H1104	03301200A000	Bushing	4
H1105	GP-011915-00	Take-Up Lever Driving Cam	4
H1106	06003SW-2111	Washer (@4)	4
H1107	06003SW-2111	Washer (@4)	8
H1108	02023SC-7113	Hex. Socket Bolt (M4*L8)	8
H1109	03062ET-A001	Cable Fastener	8
H1110	03008700H000	Balunce Cam	4
H1111	03008800H000	Balunce Cam Bracket	4
H1112	18047SC-7113	Hex. Socket Bolt (M5*L15)	8
H1113	GP-012048-00	NEEDLE BAR DRIVING SHAFT BUSH	4
H1114	03042SF-T121	FELT "A"	8
H1115	08113SC-A001	COLLAR SCREW 11/64,N=40,L6	4
H1116	AS-002145-02	ARM SIDE COVER ASS'Y	4
H1117	GP-014783-00	Presser Foot Cam Boss	4

Ref. No	Part No.	Part Names	Q'ty

H2

Arm II

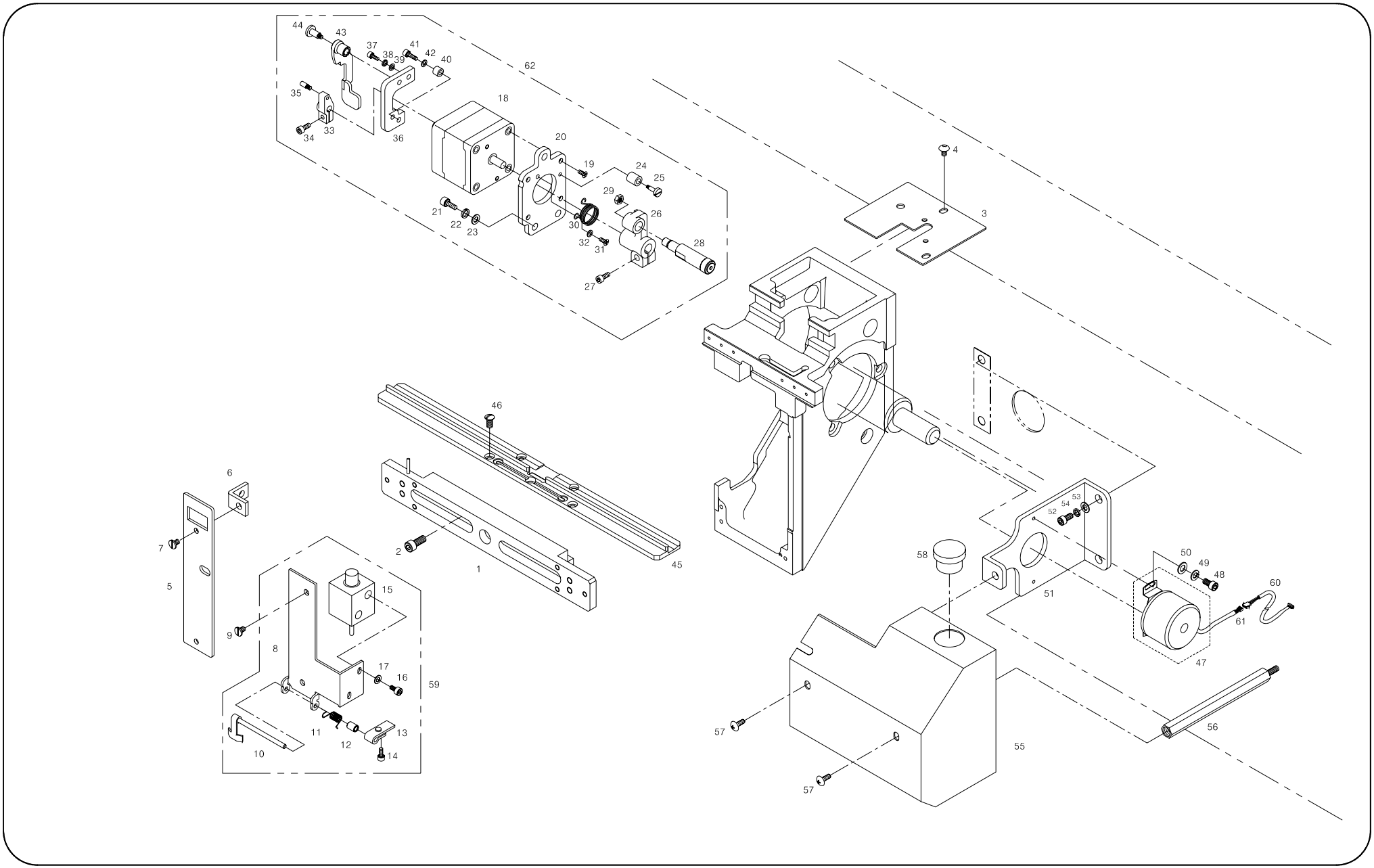
44
43
37
38
39
41
42
40
62
35
18
34
33
36
20
19
24
25
29
21
22
23
30
26
32
31
28
27
4
3
46
6
7
5
2
1
45
9
8
15
17
16
59
11
12
13
10
14
58
52
54
53
51
50
49
48
60
61
47
57
55
56
57

Ref.No	Part No.	Part Names	Q'ty
H2001	03070LM-BE00	Lm Guide Block Set (6C)	4
	03069LM-B002	Lm Guide Block Set (9C)	
	03068LM-BB00	Lm Guide Block Set (12C)	
	03068LM-H003	Lm Guide Block Set (15C)	
H2002	03071SC-A001	Hex.Scoket Bolt (M3*L15)	4
H2003	03302500I000	Arm Top Cover	4
H2004	18033SC-3123	Truss Screw (M5*L6)	4
H2005	GP-009456-00	Arm Guard Plate(L)	4
H2006	03008300I000	Arm Guard Plate(L) Bracket	8
H2007	02009SC-A001	Side Cover Screw	4
H2008	03303800I000	Arm Guard Plate(R)	4
H2009	03065SC-A001	Guard Plate Screw	4
H2010	03304100I000	Thread Holding Lever Ass'y	4
H2011	03304200I000	Lever Spring	4
H2012	03304300I000	Lever Spring Bush.	4
H2013	03304400I000	Thread Holding Push Plate	4
H2014	07035SC-7113	Hex.Scoket Bolt (M3*L6)	4
H2015	10009EL-A002	UPPER THREAD CATCHER SOL.	4
H2016	05007SC-7113	Hex.Scoket Bolt (M3*L5)	8
H2017	06011SW-2111	Washer (@3)	8
H2018	03410200H000	Jump Motor	4
H2019	02002SC-7119	Pluss Screw (M4*L8)	16
H2020	03410100I000	Jump Motor Base	4
H2021	07016SC-7113	Hex.Scoket Bolt (M4*L10)	8
H2022	18014SW-3115	Spring Washer (@4)	8
H2023	06003SW-2111	Washer (@4)	8
H2024	03410300H000	Jump Crank Stopper	8
H2025	03411400H000	Stud for Jump Crank Stopper	4
H2026	03410400I000	Jump Driving Crank	4
H2027	02023SC-7113	Hex. Socket Bolt (M4*L8)	4
H2028	03411810I000	Jump Crank Roller Ass'y	4
H2029	03031SN-A001	Pin. Nut (11/64-N=40)	4
H2030	03410800I000	Jump Retrun Spring	4
H2031	08006SC-8118	Plus Screw (M3*L5)	4
H2032	06011SW-2111	Washer (@3)	4
H2033	03410900H000	Jump Driving Clutch	4
H2034	02023SC-7113	Hex. Socket Bolt (M4*L8)	4
H2035	03411000H000	Jump Clutch Pin	4
H2036	03411100I000	Jump Clutch Base	4
H2037	22006SC-7113	Hex.Scoket Bolt (M3*L8)	4

Ref. No	Part No.	Part Names	Q'ty
H2038	11019SW-9115	Spring Washer (3@)	4
H2039	06011SW-2111	Washer (@3)	4
H2040	03304900H000	Jump Clutch Lever Stopper	4
H2041	04010MC-7113	Hex.Scoket Bolt (M4*L10)	4
H2042	06011SW-2111	Washer (@3)	4
H2043	03411200I000	Jump Driving Clutch Lever	4
H2044	03411300H000	Stud for Jump Clutch Lever	4
H2045	07027AD-AE00	TAKE-UP GUIDE RAIL (6C)	4
	07026AD-A002	Take-Up Guide Rail L=250 (9C)	4
	03300604U000	Take-Up Guide Rail L=329 (12C)	4
	01300105U000	Take-Up Guide Rail (L) (15C)	1
	01300205U000	Take-Up Guide Rail (M) (15C)	2
	01400105U000	Take-Up Guide Rail (R) (15C)	1
H2046	05041SC-A001	Guide Rail Serew	16
H2047	03013EL-T121	Encoder Set	1
H2048	07035SC-7113	Bracket Screw (M3*L6)	2
H2049	08011SW-1111	Spring Washer (@3-S)	2
H2050	06011SW-2111	Washer (@3)	2
H2051	GP-008536-00	Encoder Base	1
H2052	08076SC-7113	Hex. Socket Bolt (M5*L12)	4
H2053	16018SW-1111	Washer (@5)	2
H2054	18048SW-3115	Spring Washer (@5)	2
H2055	GP-009020-01	Oil Tank Cover (4 Head) (UK1202)	1
	GP-009020-01	Oil Tank Cover (4 Head) (UK1204)	
	GP-009023-01	Oil Tank Cover (6 Head) (UK1206)	
	GP-009023-01	Oil Tank Cover (6 Head) (UH1506C)	
	GP-003620-03	Oil Tank Cover (8 Head) (UH1508)	
H2056	18036CW-UK06	Oil Tank Cover Support	1
H2057	05008MC-9123	TRUSS SCREW(M5*L8) SUS	2
H2058	01303800U000	Cover Rubber Cap	1
H2059	AS-000858-00	UPPER THREAD HOLDING SET	4
H2060	25033EL-UK01	ENCODER CABLE(4HT-33) (UK1202)(UK1204)(UH1506C)	1
	25029EL-UK06	ENCODER CABLE(25-29) (UK1206)(UH1508)	
H2061	25103ET-B001	Encoder Conector	1
H2062	AS-000861-00	Jump Set	4

H3

Arm III

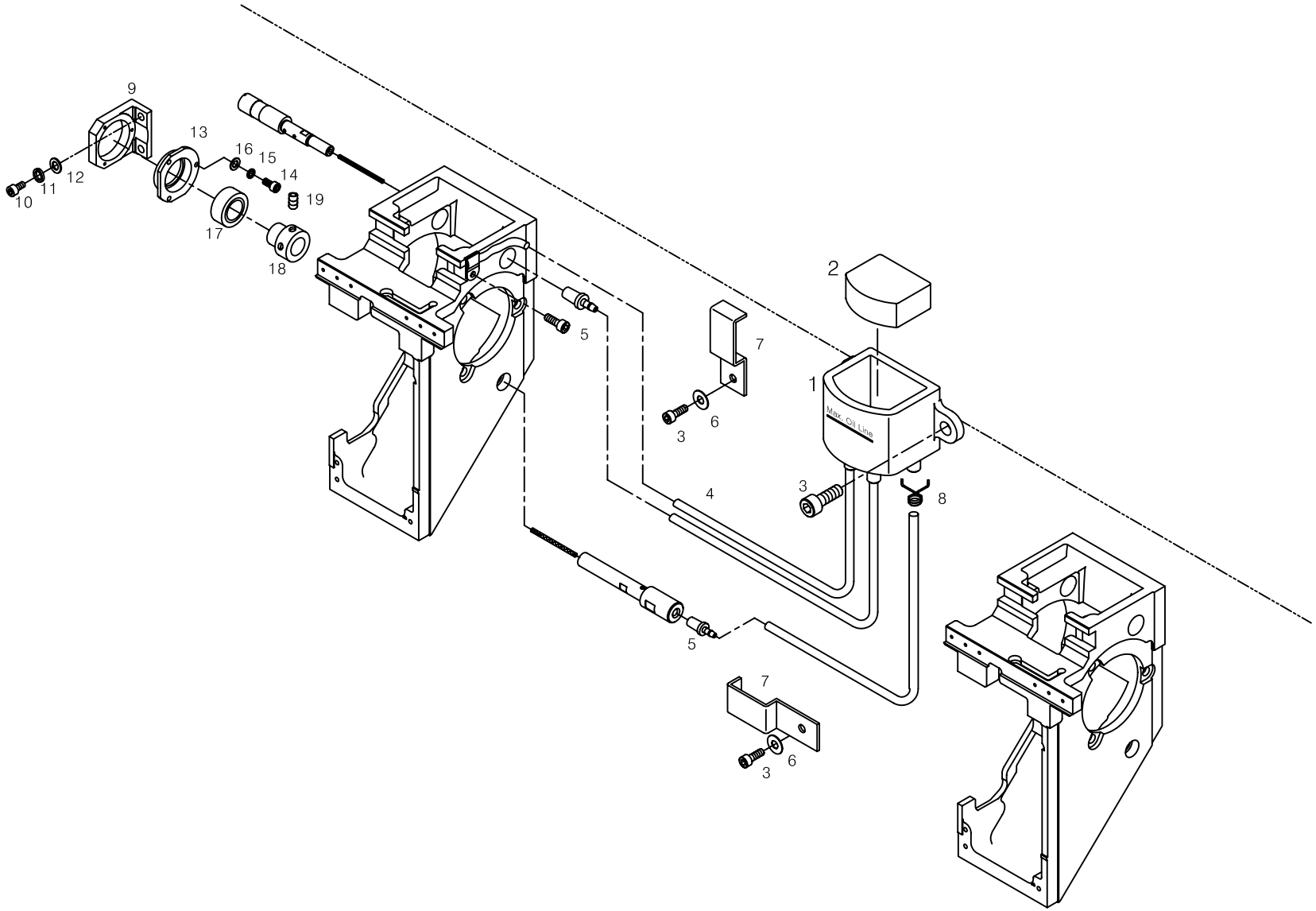

Ref.No	Part No.	Part Names	Q'ty
H3001	GP-009589-00	Oil Tank Ass'Y	4
H3002	GP-009590-00	Oil Tank Felt	4
H3003	02023SC-7113	Hex. Socket Bolt (M4*L8)	16
H3004	18045ET-UK01	Oil Hose L=160	16
H3005	03000500U000	Oil Tube Pin	12
H3006	18015SW-3111	WASHER (4@)	8
H3007	18033PR-UK01	OIL TUBE GUIDE	8
H3008	32046SP-T121	HOLDER FOR OIL HOSE	12
H3009	03008400H000	Top Shaft Bracket "C"	1
H3010	08087SC-7113	Hex. Socket Bolt (M8*L25)	2
H3011	15095SW-3115	Spring Washer (@8)	2
H3012	04029SW-A001	Stud Bolt Washer(S) (@8)	2
H3013	03008500H000	Top Shaft Bearing Case "B"	1
H3014	03016SC-4113	Hex. Socket Bolt (M5*L15)	3
H3015	18048SW-3115	Spring Washer (5@)	3
H3016	18049SW-3111	Washer (@5)	3
H3017	01001100H000	Ball Bearing (6005Zz)	1
H3018	03005210H000	Collar "A"	1
H3019	14060AF-4517	Hex.Socket Screw(M6*L6)	2

Ref. No	Part No.	Part Names	Q'ty

I1 Color Change Set

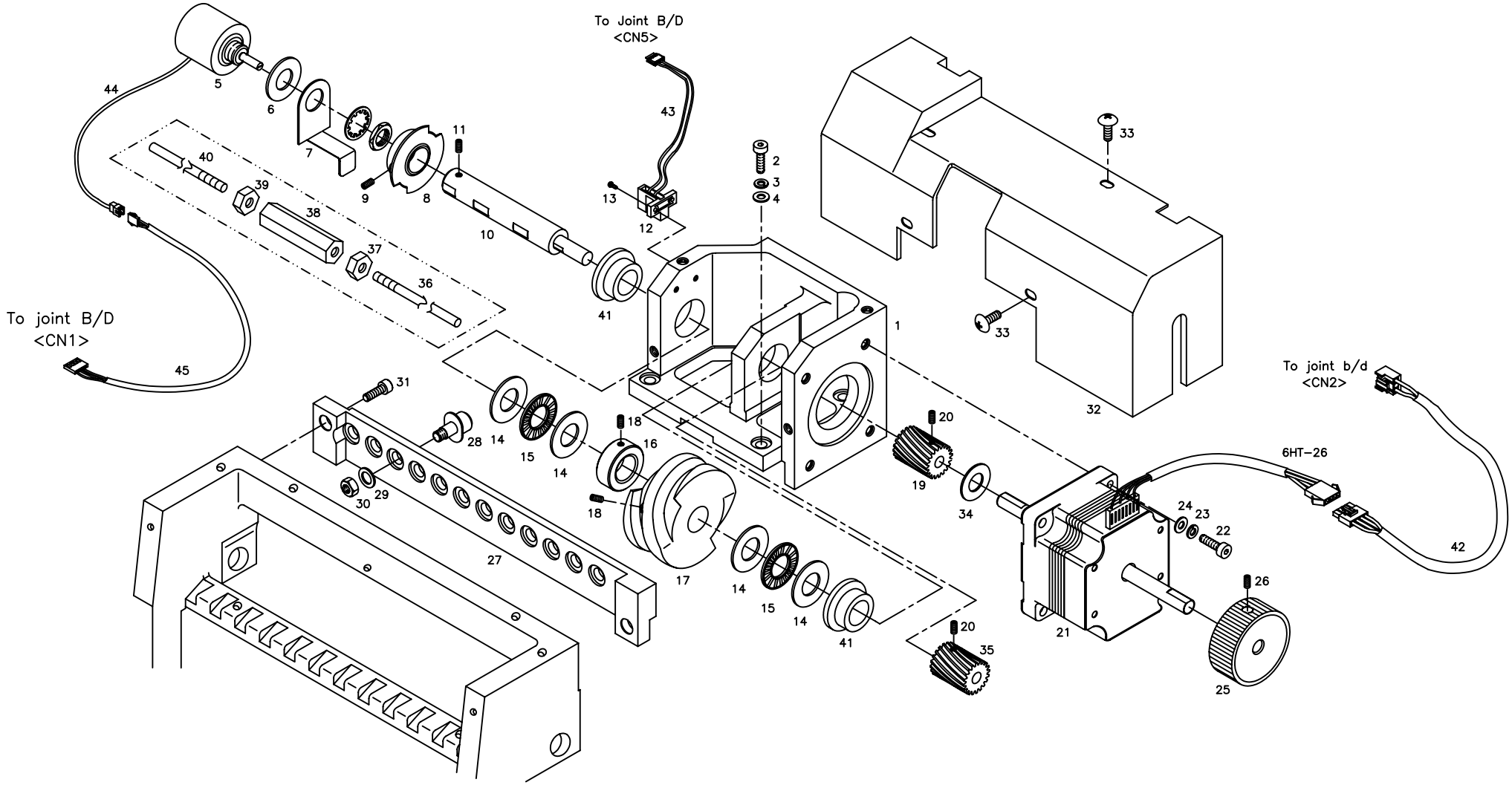

Ref.No	Part No.	Part Names	Q'ty
I1001	13001CA-UK06	Color Change Base	1
I1002	05008SC-4113	Hex.Socket Bolt (M4*L16)	4
I1003	18014SW-3115	Spring Washer (@4-No2)	4
I1004	18015SW-3111	Washer (4@)	4
I1005	15012MT-T121	Potentiometer (7824 R1K L25)	1
I1006	15014PR-T121	Potentiometer Washer	1
I1007	13015PR-UK06	Potentiometer Bracket	1
I1008	13032AD-UK06	Color Change Film Set	1
I1009	04014SC-4517	Hex.Socket Set Screw(M5*L5)	2
I1010	13007CW-UK06	Color Change Shaft	1
I1011	08113SC-A001	Collar Screw	1
I1012	08102300B000	Half Turn Sensor (Gp1S51V)	1
I1013	08006SC-8118	Plus Screw (M3*L5)	2
I1014	13010BR-T121	Washer(@12*@26*1T)	4
I1015	13041BR-UK01	Washer(12*@26*1T)	2
I1016	13010CW-UK06	Color Change Collar	1
I1017	13005CM-UK06	Color Change Cam	1
I1018	04012AF-A001	Hook Shaft Bush Screw	5
I1019	13020GA-UK06	Color Change Gear (L)	1
I1020	08113SC-A001	Collar Screw	4
I1021	EP-000140-00	Color Change Motor	1
I1022	05008SC-4113	Hex.Socket Bolt (M4*L16)	4
I1023	02028SW-9115	Spring Washer (@4)	4
I1024	05009SW-1111	Washer (@4-L)	4
I1025	13022AD-UK06	Color Change Passivity Handle	1
I1026	03020SC-A001	Drive Pin Screw 11/64,N40,L8	2
I1027	08103102C010	Color Change Roller Base (6C)	1
	13026CL-D104	Color Change Roller Base (9C)	
	13026CL-UK06	Color Change Roller Base (12C)	
	13026CL-UK16	Color Change Roller Base (15C)	
I1028	15029AF-T121	Roller Set	12
I1029	18048SW-3115	Spring Washer (@5)	12
I1030	12010SN-1211	Hex.Nut (M5)	12
I1031	18047SC-7113	Hex/ Socket Bolt (M5*L15)	2
I1032	GP-011303-00	Color Change Cover (UK1202)(UK1204)	1
	GP-011777-00	Color Change Cover (UK1206)(UH1506C)	
I1033	04006MC-9123	TRUSS SCREW(M4*L6) SUS	4
I1034	13019PR-A001	Half Turm Film Washer (T1.0)	1
I1035	13021GA-UK06	Color Change Gear (R)	1
I1036	05000103UK00	Color Change Shaft (UK604)	1

Ref. No	Part No.	Part Names	Q'ty
I1036	23007SH-UK01	Color Change Shaft (UK1204)	1
	23007SH-UK14	Color Change Shaft (UK1504)	
	06000102UK60	Color Change Shaft "A" (UK606)(UK906)	
	23012SH-UK06	Color Change Shaft "A" (UK1206)	
	23012SH-UK16	Color Change Shaft "A" (UK1506)	
I1037	17053SN-1111	Hex. Nut(L) (M6*T5-L) (UK1206)	1
I1038	17051SN-A001	Mes Priving Shaft Joint (UK1206)	1
I1039	13042SN-1111	Hex.Nut (M6*T5-R) (UK1206)	1
I1040	06000202UK60	Color Change Shaft "B" (UK606)	1
	23013SH-UK06	Color Change Shaft "B" (UK906)(UK1206)	
	23013SH-UK16	Color Change Shaft "B" (UK1506)	
I1041	GP-006252-00	Color Change Bushing	2
I1042	25029EL-UK01	C/C Motor Cable (2Ht-28) (UK1202)(UK1204)	1
	25025EL-UK06	Cable (25-25) (UK1206)(UH1506C)	
I1043	25037EL-UK01	Half Turn Cable (2Ht-36) (UK1202)(UK1204)	1
	25033EL-UK06	Cable (25-33) (UK1206)(UH1506C)	
I1044	25036EL-UK01	Cc Potentiometer Cable(4Ht-36)	1
I1045	25035EL-UK01	Cc Poten. Meter To J/B(4Ht-35)	1

I2 Color Change Set(UH1508)

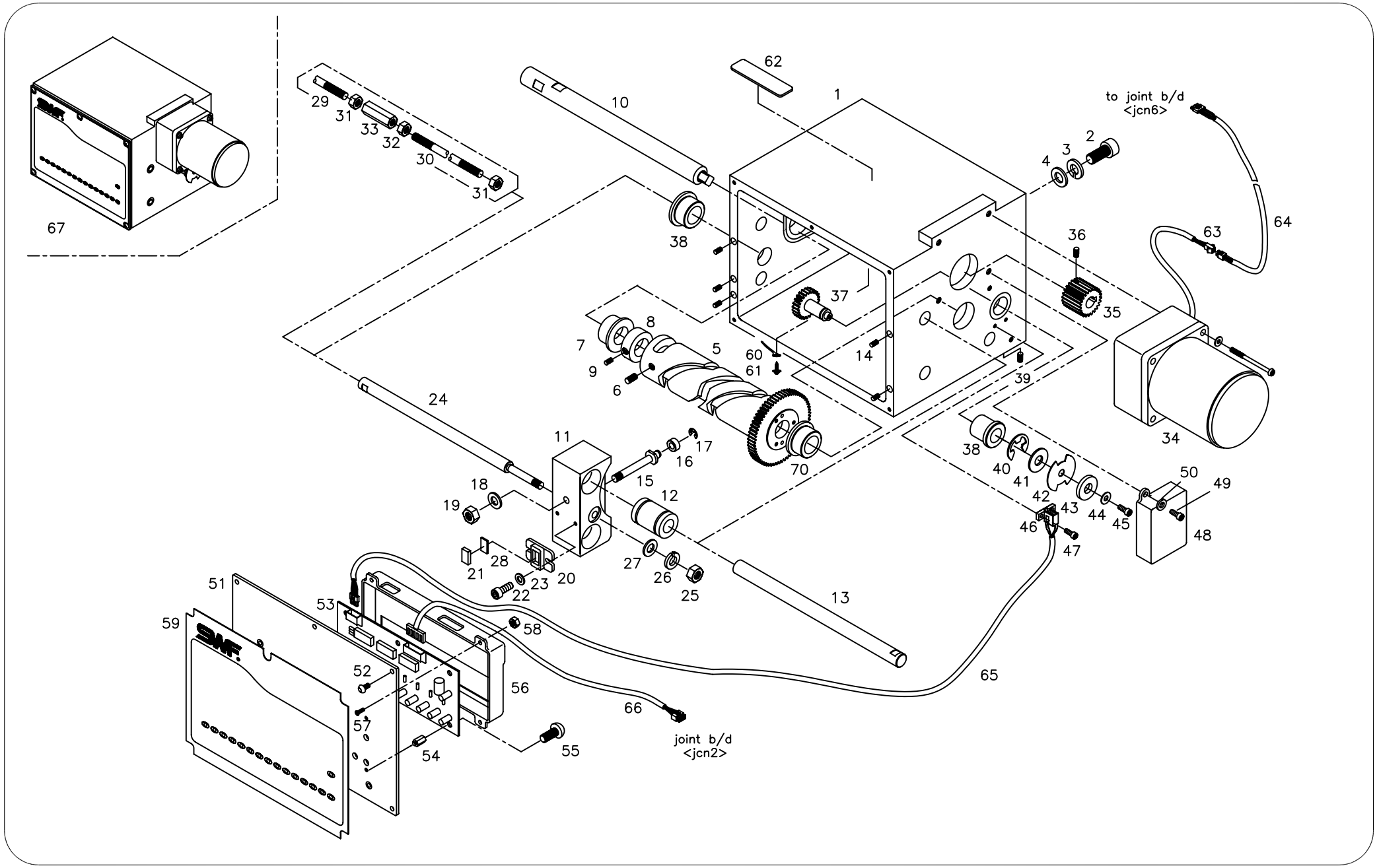

Ref.No	Part No.	Part Names		Q'ty
I2001	GP-017008-00	COLOR CHANGE BOX	(12C)	1
	GP-017009-00	COLOR CHANGE BOX	(15C)	
I2002	03003SC-4113	HEX. SOCKET BOLT "B"(M8*L35)		4
I2003	15095SW-3115	SPRING WASHER (@8)		4
I2004	04029SW-A001	STUD BOLT WASHER(S) (@8)		4
I2005	08110005B000	COLOR CHANGE CAM ASS'Y (15C)		1
I2006	08037AF-4517	HEX. SOCKET SET SCREW M6*L10		2
I2007	08101100B000	CAM BUSHING		2
I2008	13012CW-A001	CAM COLLAR		1
I2009	04016AF-A001	CAM COLLAR SCREW		2
I2010	13009SF-AB00	CAM SHAFT	(12C)	1
	08100305B000	CAM SHAFT	(15C)	
I2011	13034AD-A001	COLOR CHANGE BLOCK		1
I2012	13035BR-A001	GUIDE BUSHING		2
I2013	13031SH-AB00	GUIDE SHAFT	(12C)	2
	08100405B000	GUIDE SHAFT	(15C)	
I2014	03020SC-A001	DRIVE PIN SCREW 11/64,N40,L8		5
I2015	13040CW-A001	ROLLER SHAFT		1
I2016	13043CW-A001	ROLLER		1
I2017	13044SR-4013	E-RING (@4)		1
I2018	08057SW-1111	WASHER (@6)		1
I2019	13042SN-1111	HEX.NUT (M6*T5-R)		1
I2020	13036PR-A001	MAGNET HOLDER		1
I2021	10-027C-SC53	MAGNET		1
I2022	22006SC-7113	HEX. SOCKET BOLT (M3*L8)		2
I2023	06011SW-2111	WASHER (@3)		2
I2024	17054SH-AB00	COLOR CHANGE SHAFT "A"	(12C)	1
	08000205B000	COLOR CHANGE SHAFT "A"	(15C)	
I2025	13042SN-1111	HEX.NUT (M6*T5-R)		1
I2026	03026SW-9115	SPRING WASHER (@6)		1
I2027	03025SW-1211	WASHER (@6)		1
I2028	08106200B000	MAGNET HOLDER SPACER		1
I2029	06000205UH80	COLOR CHANGE SHAFT C L=1535.5		1
I2030	06000105UH80	COLOR CHANGE SHAFT B L=1555		1
I2031	13042SN-1111	HEX.NUT (M6*T5-R)		3
I2032	17053SN-1111	HEX. NUT(L) (M6*T5-L)		2
I2033	17051SN-A001	MES PRIVING SHAFT JOINT		2
I2034	EP-000160-00	COLOR CHANGE MOTOR UNIT		1
I2035	13029GA-A001	MOTOR GEAR		1
I2036	13030SC-4517	HEX. SOCKET SET SCREW (M4*L8)		1

Ref. No	Part No.	Part Names		Q'ty
I2037	13014GA-A001	HALF TURN GEAR		1
I2038	08101500B000	HALF TURN BUSHING		2
I2039	03020SC-A001	DRIVE PIN SCREW 11/64,N40,L8		1
I2040	08044SR-4013	E-RING (@8)		1
I2041	13018PR-A001	HALF TURN FILM WASHER (T2.3)		1
I2042	08101700B000	HALF TURN FLIM		1
I2043	13019PR-A001	HALF TURM FILM WASHER (T1.0)		1
I2044	06011SW-2111	WASHER (@3)		1
I2045	02023SC-7113	HEX. SOCKET BOLT (M4*L8)		1
I2046	08102300B000	HALF TURN SENSOR (GP1S51V)		1
I2047	15163SC-3123	TRUSS SCREW (M3*L12)		2
I2048	13025PM-A001	SENSOR COVER		1
I2049	02015SC-7113	HEX.SOCKET BOLT(M4*L10)		2
I2050	18015SW-3111	WASHER (4@)		2
I2051	09100105B000	MEMBRANE SWITCH COVER (15C)		1
I2052	03006MC-9123	TRUSS SCREW(M3*L6) SUS		5
I2053	04-001A-SW60	COLOR CHANGE BOARD	(12C)	1
	15-001A-UI15	COLOR CHANGE BOARD	(15C)	
I2054	GP-008534-00	STUD BOLT		6
I2055	06010SC-8118	PLUS SCREW (M3*L4)		6
I2056	09100205B000	BOARD COVER (15,C)		1
I2057	13061SC-8119	PLUS SCREW (M3*L10)		4
I2058	05057SN-3211	HEX. NUT (M3-NO2)		4
I2059	GP-008160-00	MEMBRANCE SWITCH (B-UH1208-45)		1
	GP-008159-00	MEMBRANCE SWITCH (B-UH1508-45)		
I2060	03062ET-A001	CODE CLIP		1
I2061	22025SC-9134	SCREW (M4*L10)		1
I2062	09000300B000	MAGNET STICKER		1
I2063	25101ET-B001	COLOR CHANGE CONNECTOR		1
I2064	25015EL-A001	COLOR CHANGE-JOINT B/D (25-15)		1
I2065	25073EL-A001	HALF TURN SENSOR CABLE (25-73)		1
I2066	02107100UH80	CABLE (SH-71)		1
I2067	08100014B000	COLOR CHANGE BOX SET	(12C)	1
	08100015B000	COLOR CHANGE BOX SET	(15C)	

J

Wiper Set

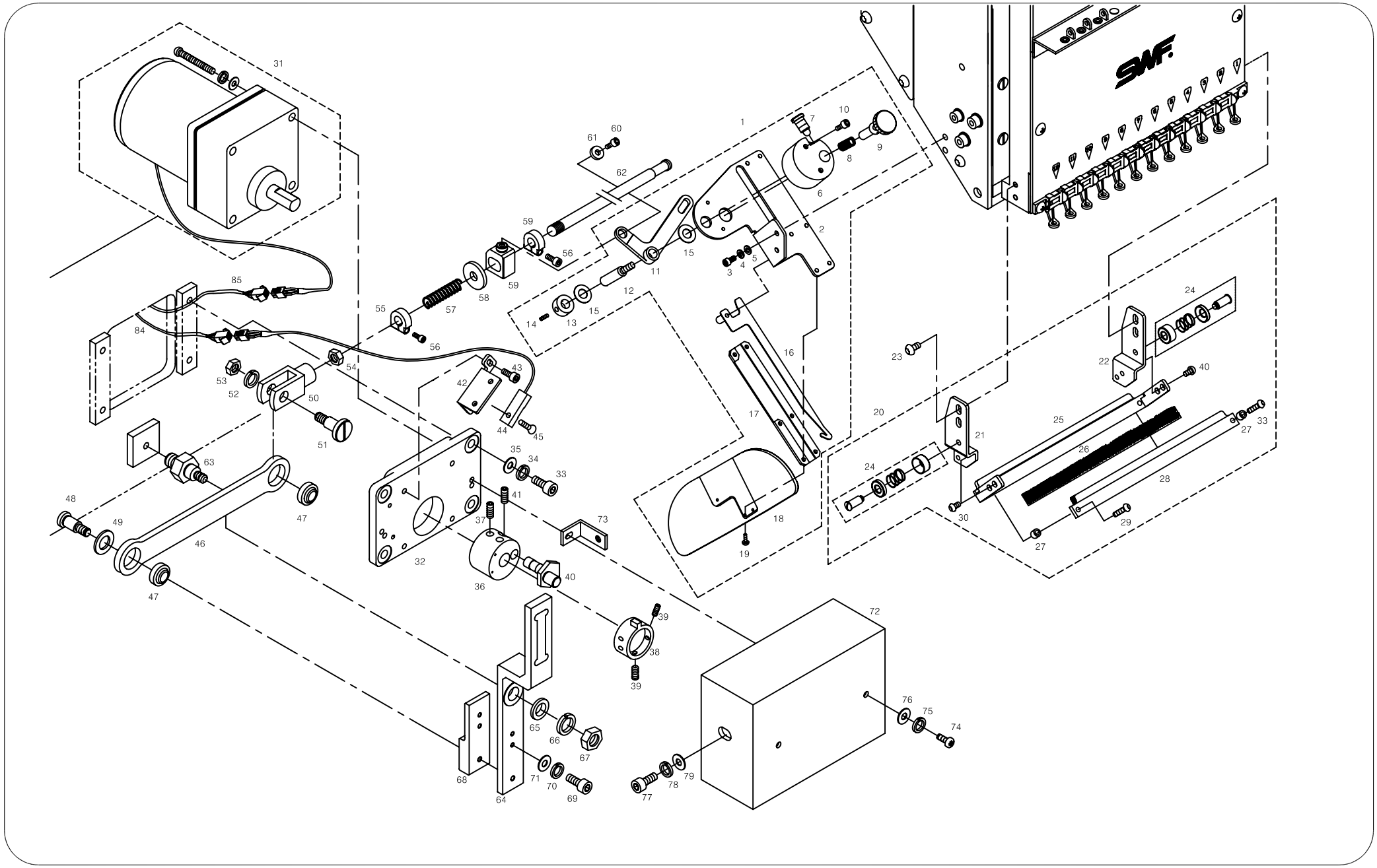
31
1
7
10
9
8
6
2
61
60
62
59
56
58
59
57
55
56
15
11
12
3
4
5
14
13
15
85
84
54
53
52
50
51
43
42
44
45
16
23
24
22
40
20
21
25
26
27
33
28
29
30
27
17
18
19
63
48
49
47
46
47
35
34
33
41
37
73
32
36
40
39
38
39
72
76
75
74
65
66
67
68
71
70
69
64
77
78
79

Ref.No	Part No.	Part Names	Q'ty
J-001	08500010U000	Upper Thread Catcher Set	4
J-002	03500110H000	Upper Thread Catcher Base	4
J-003	02023SC-7113	Hex.Socket Bolt (M4*L8)	8
J-004	18014SW-3115	Spring Washer (@4-No2)	8
J-005	18015SW-3111	Washer (4@)	8
J-006	03500900H000	Clutch Block	4
J-007	03501000H000	Clutch Stud Screw	4
J-008	03501100H000	Clutch Spring	4
J-009	03501200H000	Clutch Dial	4
J-010	11029SC-4113	Hex. Socket Bolt (M4*L20)	8
J-011	03500500H000	Upper Catcher Driving Lever	4
J-012	03500600H000	Driving Lever Pin	4
J-013	03500700H000	Driving Lever Pin Collar	4
J-014	04014SC-4517	Hex.Socket Set Screw(M5*L5)	8
J-015	03500800H000	Driving Lever Pin Washer	8
J-016	03500330H000	Upper Thread Hook	4
J-017	03500210H000	Upper Thread Hook Base Cover	4
J-018	12209100U000	Cap Guide	4
J-019	03005MC-3123	TRUSS SCREW (M3*L5)	24
J-020	08600002B000	Upper Thread Base Set (6C)	4
	08600003B000	Upper Thread Base Set (9C)	
	08600004B000	Upper Thread Base Set (12C)	
	08600005B000	Upper Thread Base Set (15C)	
J-021	09040PR-A001	Bracket (L)	4
J-022	09041PR-A001	Bracket (R)	4
J-023	02009SC-A001	Side Cover Screw	16
J-024	09044PR-A001	Upper Thread Holder Disk Set	8
J-025	09034PR-AE00	Upper Thread Presser Base (6C)	4
	09030PR-A002	Upper Thread Presser Base (9C)	
	09026PR-AB00	Upper Thread Presser Base (12C)	
	09052PR-T151	Upper Thread Presser Base (15C)	
J-026	09035ET-AE00	Velcro (6C)	8
	09031ET-A002	Velcro (9C)	
	09027ET-AB00	Velcro (12C)	
	09027ET-T151	Velcro (15C)	
J-027	09038CW-A001	Thread Presser Space	8
J-028	09037PR-AE00	Presser Base Cover (6C)	4
	09033PR-A002	Presser Base Cover (9C)	
	09029PR-AB00	Presser Base Cover (12C)	
	09029PR-T151	Presser Base Cover (15C)	

Ref. No	Part No.	Part Names	Q'ty
J-029	07018SC-8118	Plus Screw (M3*L8)	8
J-030	06010SC-8118	Plus Screw (M3*L4)	16
J-031	EP-000141-00	Upper Thread Hook Motor Unit	1
J-032	GP-015086-00	MOTOR BASE	1
J-033	06025MC-7113	Hex.Socket Bolt(M6*L25)	4
J-034	16014SW-4115	Spring Washer (@6)	4
J-035	08057SW-1111	Washer (@6)	4
J-036	03003300H000	Cam Shaft Fixing Block	1
J-037	05008MC-4517	Hex.Socket Bolt(M5*L8)	2
J-038	GP-005184-01	SENSOR SENSING ADJUSTING RING	1
J-039	04014SC-4517	Hex.Socket Set Screw(M5*L5)	2
J-040	03003500H000	Motor Driving Cam Shaft	1
J-041	04014SC-4517	Hex.Socket Set Screw(M5*L5)	1
J-042	GP-015085-00	UPPER THREAD HOOK SENSOR BASE	1
J-043	07035SC-7113	BRACKET SCREW (M3*L6)	2
J-044	15-027A-2070	SENSOR	1
J-045	13061SC-8119	Plus Screw (M3*L10)	1
J-046	03004200HH00	MOTOR DRIVING CONNECT PLATE	1
J-047	03004400H000	Motor Driving Connect Bearing	2
J-048	03008300H000	Connecting Plate Stud Screw A	1
J-049	03004500H000	Connecting Plate Pin Washer	1
J-050	03004800H000	Connecting Plate Knuckle	1
J-051	03004700H000	Connecting Plate Stud Screw	1
J-052	16014SW-4115	SPRING WASHER (@6)	1
J-053	13042SN-1111	Hex.Nut (M6*T5-R)	1
J-054	04032SN-A001	Hex. Nut (M8-No2)	1
J-055	03002610H000	Return Spring Stopper	8
J-056	05008SC-4113	Hex.Socket Bolt (M4*L16)	8
J-057	03002700H000	Return Spring	4
J-058	03002800H000	Return Spring Stopper Washer	4
J-059	03003000H000	Return Spring Fix Pin	4
J-060	02015SC-7113	Hex.Socket Bolt(M4*L10)	4
J-061	03002900H000	Return Spring Fix Pin Washer	4
J-062	03007000UK20	Upper Thread Driving Shaft (UK1202)	1
	03007000UK40	Upper Thread Driving Shaft (UK1204)	
	03007000UK60	Upper Thread Driving Shaft (UK1206)	
	03007000UH60	Upper Thread Driving Shaft (UH1506C)	1
	06000305UH80	Upper Thread Driving Shaft (UH1508)	
J-063	03003810H000	Stud Bolt For Driving Plate	1
J-064	03003910H000	Upper Thread Driving Plate	1

J

Wiper Set

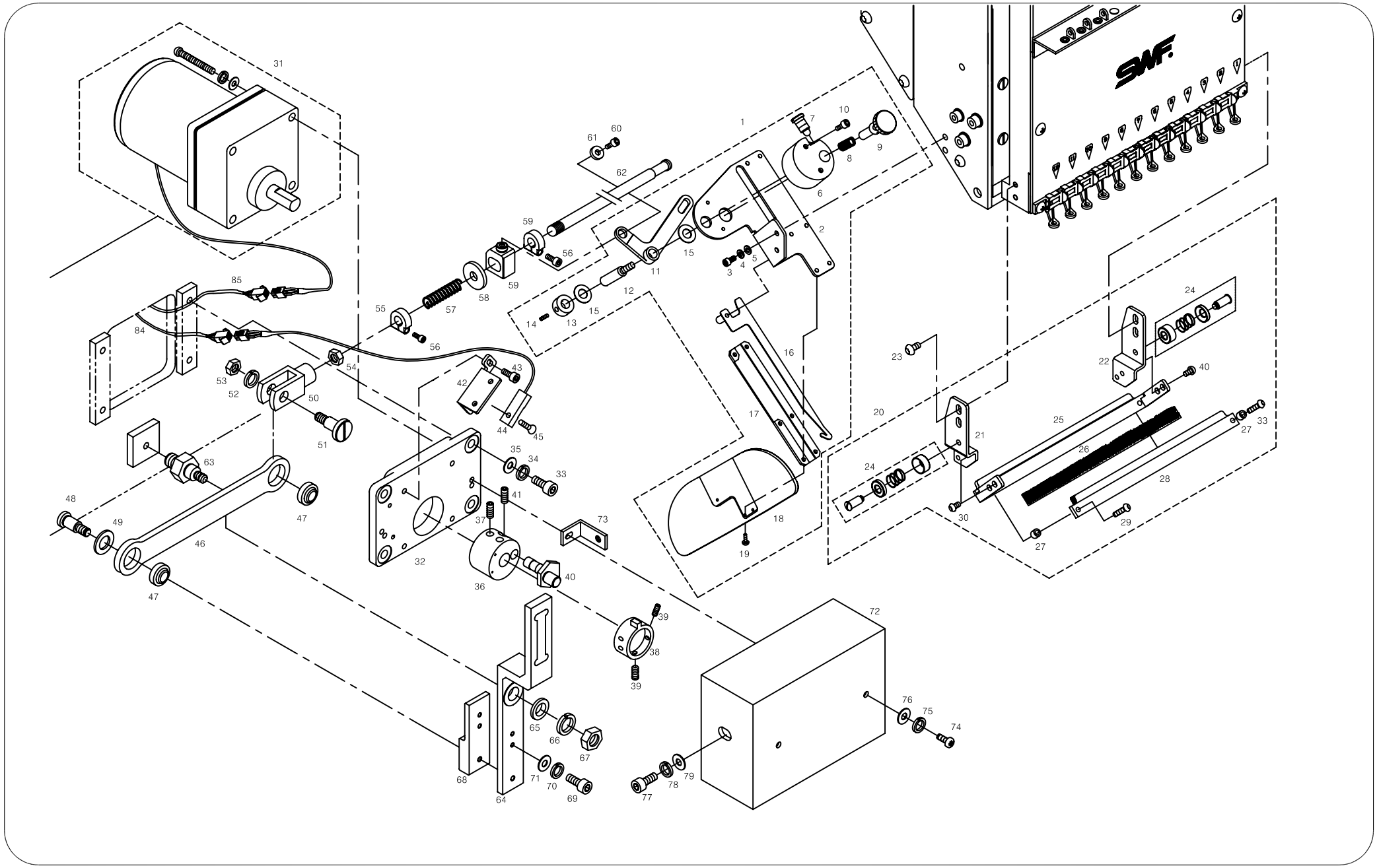
31
1
7
10
9
8
6
2
61
60
62
59
56
58
59
57
55
56
15
11
12
3
4
5
14
13
15
85
84
54
53
52
50
51
43
42
44
45
16
23
24
22
40
20
21
25
26
27
33
28
29
30
27
17
18
19
63
48
49
47
46
47
35
34
33
41
37
73
32
36
40
39
38
39
72
76
75
74
65
66
67
68
71
70
69
64
77
78
79

Ref.No	Part No.	Part Names	Q'ty
J-065	03004000H000	Stud Bolt Washer	1
J-066	15095SW-3115	Spring Washer (@8)	1
J-067	04032SN-A001	Hex. Nut (M8-No2)	1
J-068	03004100H000	Driving Plate Block	1
J-069	18047SC-7113	Hex/ Socket Bolt (M5*L15)	2
J-070	18048SW-3115	Spring Washer (5@)	2
J-071	18049SW-3111	Washer (@5)	2
J-072	12001900U000	Upper Thread Hook Motor Cover	1
J-073	03008600H000	Motor Cover Fixing Bracket	2
J-074	02023SC-7113	Hex. Socket Bolt (M4*L8)	2
J-075	18014SW-3115	SPRING WASHER (@4-NO2)	1
J-076	18015SW-3111	WASHER (4@)	1
J-077	02023SC-7113	Hex.Socket Bolt (M4*L8)	2
J-078	18014SW-3115	Spring Washer (@4-No2)	2
J-079	18015SW-3111	Washer (4@)	2
J-080	02106600U020	Sh-66-1 (UK1202)	1
	02106600U040	Sh-66-2 (UK1204)	
	02106600U060	Sh-66-4 (UK1206)	
	02106600UH60	Sh-66-3 (UH1506C)	
	02106600UH80	SH-66-5 (UH1508)	
J-081	02106700U020	Sh-67-1 (UK1202)	1
	02106700U040	Sh-67-2 (UK1204)	
	02106700U060	Sh-67-4 (UK1206)	
	02106700UH60	Sh-67-3 (UH1506C)	
	02106800UH80	SH-68-5 (UH1508)	

Ref. No	Part No.	Part Names	Q'ty

K

Head

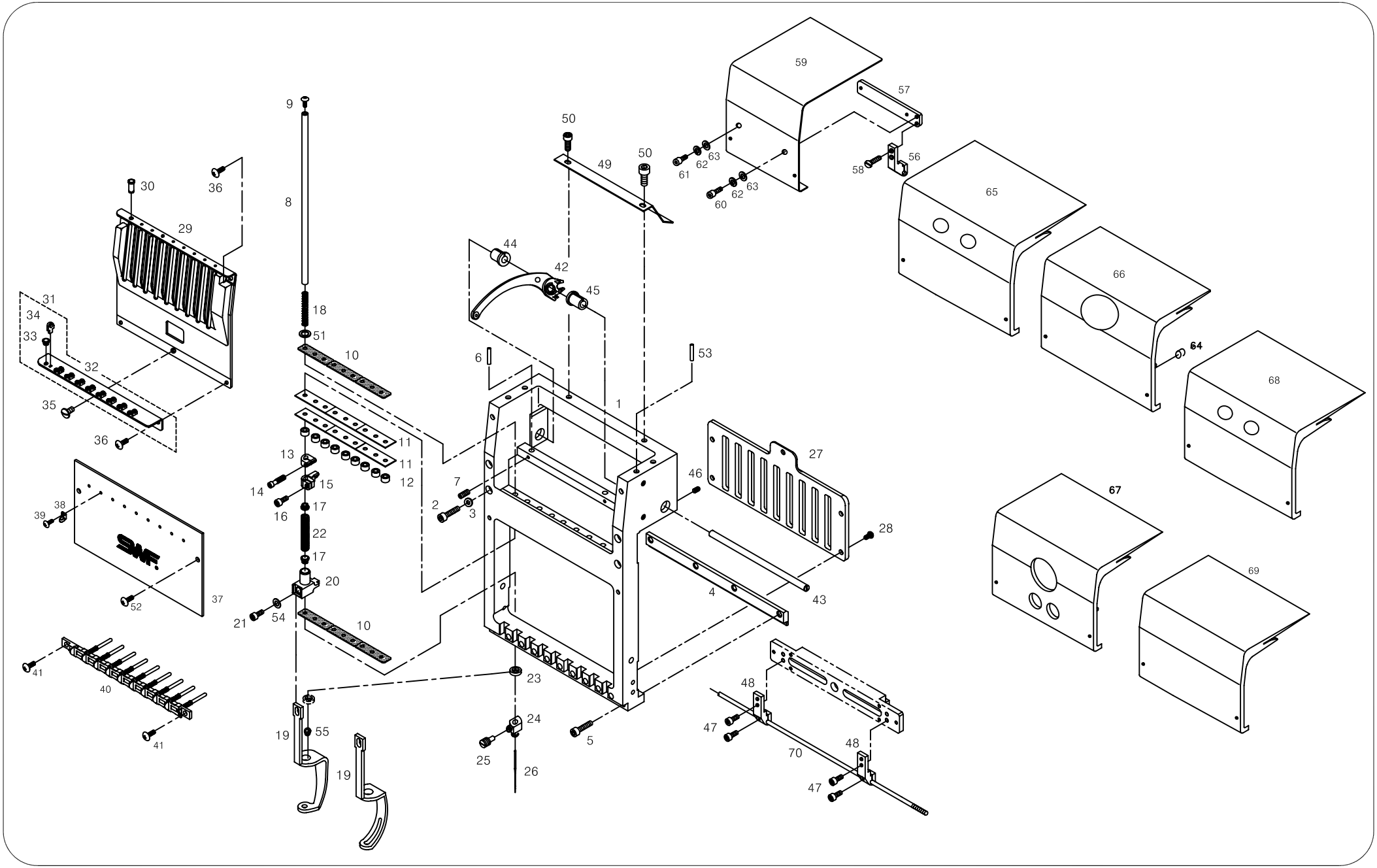
59
57
9
50
50
49
63
62
61
62
63
60
56
58
65
30
36
8
29
44
42
45
66
31
34
33
18
51
64
10
6
53
68
32
1
35
36
11
11
27
13
12
46
14
15
7
67
38
39
17
2
3
16
22
28
17
20
37
52
4
43
69
21
54
10
41
40
23
48
24
47
19
55
5
70
48
25
26
19
47

Ref.No	Part No.	PartNames	Q'ty
K-001	08200103I000	Head 9C	4
K-002	05008SC-4113	Hex.Socket Bolt (M4*L16)	16
K-003	06003SW-2111	Washer (@4)	16
K-004	08201303I000	Head Rail 9C	4
K-005	04023MC-4113	Hex. Socket Bolt (M4*L23)	16
K-006	05015CW-A001	Head Base Pin(@5*L15)	8
K-007	03022SC-4517	Hex. Socket Set Screw(M4*L5)	8
K-008	05018CW-A001	Needle Bar	36
K-009	05019SC-A001	Needle Bar Cover Screw (M5*L6)	36
K-010	08200700H000	Needle Bar Felt	24
K-011	05023RB-A001	Needle Bar Cushion Rubber "A"	24
K-012	05024RB-A001	Needle Bar Cushion Rubber "B"	36
K-013	11101200T000	Upper Dead Point Stopper	36
K-014	05026SC-4113	Stopper Screw (9/64-11.5)	36
K-015	08201400H000	Needle Bar Holder	36
K-016	05028SC-4113	Holder Screw (9/64-L8)	36
K-017	05021PM-H001	Presser Foot Spring Guide	72
K-018	08201000I000	Needle Bar Return Spring	36
K-019	08200500I000	PRESSER FOOT	36
	GP-006119-00	PRESSER FOOT (L) (Option)	
K-020	08200900I000	Presser Foot Holder A'ssy	36
K-021	05026SC-H001	Presser Foot Bolt	36
K-022	GP-007216-00	Needle Bar Return Spring	36
K-023	08201200H000	Presser Foot Cushion Rubber A	36
K-024	08201600H000	NEEDLE FIXED HOLDER	36
K-025	05363SC-A001	Needle Fixed Screw (A/S)	36
K-026	05037DB-A001	Needle (Db-K5- #11)	36
K-027	08200203I000	Needle Bar Guide Rail (9C)	4
K-028	05041SC-A001	Bolt (9/64 n=40)	20
K-029	10200103B000	Head Face Plate (U) 9C	4
K-030	10200100H000	Thread Guide Bush "A-1"	36
K-031	10300002A000	Thread Guide (M) Set (6C)	4
	10300003A000	Thread Guide (M) Set (9C)	
	10300004A000	Thread Guide (M) Set (12C)	
	10300005A000	Thread Guide (M) Set (15C)	
K-032	GP-033546-00	Thread Guide (M) (6C)	4
	GP-033547-00	Thread Guide (M) (9C)	
	GP-033548-00	Thread Guide (M) (12C)	
	GP-033549-00	Thread Guide (M) (15C)	
K-033	05452CM-A001	Eyelet "A"	36

Ref. No	Part No.	Part Names	Q'ty
K-034	10110000A000	Eyelet "B" (6C)	24
	05483CM-A001	Eyelet "B" (9C)	36
	10110000A000	Eyelet "B" (12C)	48
	05483CM-A001	Eyelet "B" (15C)	60
K-035	05062SC-A001	Thread Guide (M) Screw (9/64 n=40)	4
K-036	05070SC-3123	Head Face Plate (U) Screw	16
K-037	12001703I000	Head Face Plate(L)	4
K-038	11012PR-B001	Thread Guide	36
K-039	09005SC-3123	Truss Bolt (M3*L5)	36
K-040	10900003I000	Thread Holding Device A'ssy	4
K-041	05070SC-3123	Truss Bolt 9/64 n=40	8
K-042	07005BM-B002	Take-Up Lever Set	36
K-043	08200503A000	Take-Up Lever Shaft (9C)	4
K-044	08203000A000	Take-Up Lever Shaft Bush(L)	4
K-045	08200800A000	Take-Up Lever Shaft Bush(R)	4
K-046	07009SC-4517	Hex. Socket Bolt(M5*L6)	8
K-047	02015SC-7113	Hex.Socket Bolt(M4*L8)	16
K-048	08004900A000	Color Change Bracket "B"	3
K-049	11047PR-A002	Cable Support "B"	4
K-050	02023SC-7113	Hex.Socket Bolt(M4*L5)	8
K-051	05022SW-A001	Spring Shoe Washer	36
K-052	05070SC-3123	Head Face Plate (U) Screw	8
K-053	01303700H000	TENSION PLATE PIN	8
K-054	05027PR-H001	PRESSER FOOT HOLDER WASHER	36
K-055	05031AF-A001	PRESSER FOOT GUIDE BUSH	60
K-056	08004700A000	Color Change Bracket "A"	1
K-057	09000200H000	Top Shaft Cover (L) Bracket	1
K-058	13048SC-A001	Bracket "A" Screw	2
K-059	01001400UK00	Top Shaft Cover (L)	1
K-060	02015SC-7113	Hex.Socket Bolt(M4*L10)	1
K-061	02023SC-7113	HEX. SOCKET BOLT (M4*L8)	1
K-062	18014SW-3115	SPRING WASHER (@4-NO2)	2
K-063	18015SW-3111	WASHER (4@)	2
K-064	02023ET-A001	Top Shaft Cover Magnet	6
K-065	09000102UK00	Top Shaft Cover "A" (6C)	1
	09000103UK00	Top Shaft Cover "A" (9C)	
	09000104UK00	Top Shaft Cover "A" (12C)	
	02001PM-UK14	Top Shaft Cover "A" (15C)	
	09000104UH00	Top Shaft Cover "A" (L191) (UH1206C)	
	09000105UH00	Top Shaft Cover "A" (L146) (UH1506C)	

K

Head

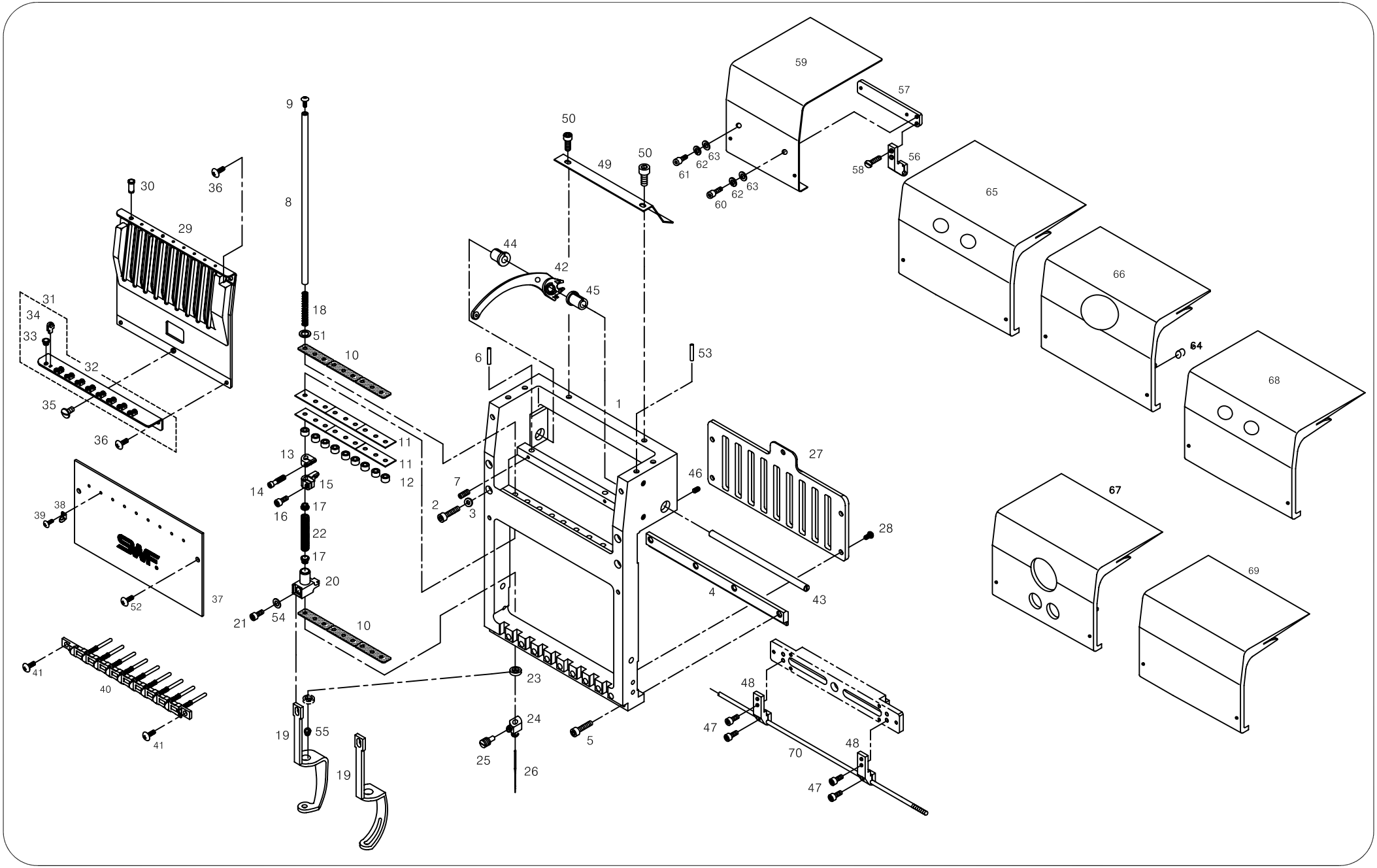
59
57
9
50
50
49
63
62
61
62
63
60
56
58
65
30
36
8
29
44
42
45
66
31
34
33
18
51
64
10
6
53
68
32
1
35
36
11
11
27
13
12
46
14
15
7
67
38
39
17
2
3
16
22
28
17
20
37
52
4
43
69
21
54
10
41
40
23
48
24
47
19
55
5
70
48
25
26
19
47

Ref. No	Part No.	Part Names		Q'ty
K-066	09000202UK00	Top Shaft Cover "B"	(6C)	2
	09000203UK00	Top Shaft Cover "B"	(9C)	
	09000204UK00	Top Shaft Cover "B"	(12C)	
	02005PM-UK14	Top Shaft Cover "B"	(15C)	
	09000204UH00	Top Shaft Cover "B" (L191)	(UH1206C)	
	09000205UH00	Top Shaft Cover "B" (L146)	(UH1506C)	
	09000205UH00	Top Shaft Cover "B"	(UH1508)	
K-067	09000104UK20	Top Shaft Cover (L=291)	(UK1202)	1
K-068	09000302UK00	Top Shaft Cover "C"	(UK606)	2
	09000303UK00	Top Shaft Cover "C"	(UK906)	
	09000304UK00	Top Shaft Cover "C"	(UK1206)	
	02036PM-UK14	Top Shaft Cover Uk1504-45	(UK1506)	
	09000304UH00	Top Shaft Cover "C" (L191)	(UH1206C)	
	09000305UH00	Top Shaft Cover "C" (L146)	(UH1506C)	
	09000305UH00	TOP SHAFT COVER "C" (L146)	(UH1508)	3
K-069	09000305UHF0	TOP SHAFT COVER "A" (L146)	(UH1508)	2
K-070	05000103UK00	Color Change Shaft	(6C)	1
	23007SH-UK01	Color Change Shaft	(12C)	
	23007SH-UK14	Color Change Shaft	(15C)	
	06000104UH60	Color Change Shaft (@6*L2237)	(UH1206C)	
	06000105UH60	Color Change Shaft (@6*L2282)	(UH1506C)	

Ref. No	Part No.	Part Names	Q'ty

L

Thread Tension Unit

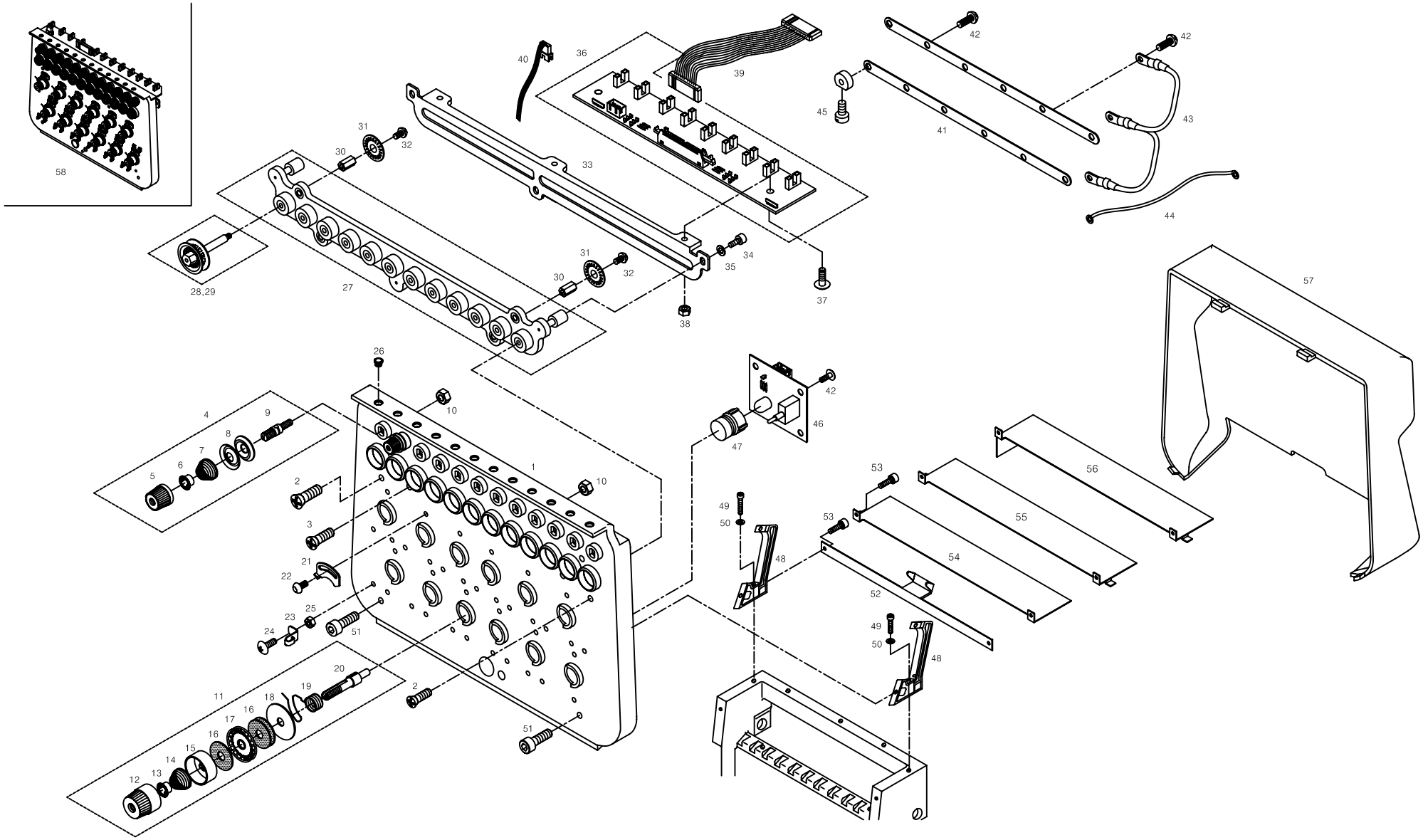

Ref.No	Part No.	Part Names		Q'ty
L-001	08300102I000	TENSION UNIT PLATE	(6C)	4
	08300103I000	TENSION UNIT PLATE	(9C)	
	08300104I000	TENSION UNIT PLATE	(12C)	
	08300105I000	TENSION UNIT PLATE	(15C)	
L-002	15089SC-7119	C.S Screw (M4*L10)		8
L-003	02002SC-7119	Pluss Screw (M4*L8)		20
L-004	08320000I000	SUB TENSION ADJUSTING SET		48
L-005	08300600A000	SUB TENSION ADJUSTING NUT(A)		48
L-006	11088PM-A001	TENSION SPRING STOPPER		48
L-007	08301100I000	TENSION SPRING		48
L-008	08301200I000	TENSION DISC		96
L-009	08301000I000	TENSION ADJUSTING STUD		48
L-010	03031SN-A001	Pin. Nut (11/64,N=40)		48
L-011	08310000B000	TENSION ADJUSTING SET		48
L-012	08300500A000	TENSION ADJUSTING NUT		48
L-013	08300700A000	TENSION SPRING STOPPER		48
L-014	08300800A000	TENSION ADJUSTING SPRING		48
L-015	11086PM-A001	Tension Spring Collar		48
L-016	11084AF-A001	Felt		144
L-017	11085AF-A001	Rotary Tension Disc		48
L-018	11083PM-A001	Disc Plate		48
L-019	11082AF-A001	THREAD TAKE-UP SPRING		48
L-020	11081CW-A001	Thread Tension Adjusting Stud		48
L-021	11009PR-B001	Thread Breakage Detecting Plat		48
L-022	09005SC-3123	Truss Screw (M3*L6)		48
L-023	11012PR-B001	Thread Guide (New)	(12C)	120
L-024	09005SC-3123	Truss Screw (M3*L6)		120
L-025	11014SN-1211	Hex.Nut (M3-No2)		120
L-026	05452CM-A001	EYELET "A"		48
L-027	08300702I000	ROLLER BASE	(6C)	4
	08300703I000	ROLLER BASE	(9C)	
	08300704I000	ROLLER BASE	(12C)	
	08300705I000	ROLLER BASE	(15C)	
L-028	11075PM-B001	Thread Sensor Roller(B1)Set	(6C)	24
	11075PM-B001	Thread Sensor Roller(B1)Set	(12C)	48
	11075PM-B001	Thread Sensor Roller(B1)Set	(15C)	28
L-029	11076PM-B001	Thread Sensor Roller(B2)Set	(15C)	32
L-030	08308300B000	THREAD DETECTING WHEEL STUD	(6C)	24
	11083CW-B001	THREAD DETECTING WHEEL STUD	(9C)	36
	08308300B000	THREAD DETECTING WHEEL STUD	(12C)	48

Ref. No	Part No.	Part Names		Q'ty
L-030	11083CW-B001	THREAD DETECTING WHEEL STUD	(15C)	60
L-031	GP-005179-00	THREAD BREAKAGE DETECTING WHEEL		48
L-032	08011SC-8118	Screw (M2*L4)		48
L-033	08300202I000	BOARD BASE	(6C)	4
	08300203I000	BOARD BASE	(9C)	
	08300204I000	BOARD BASE	(12C)	
	08300205I000	BOARD BASE	(15C)	
L-034	02023SC-7113	Hex.Socket Bolt (M4*L8)		12
L-035	06003SW-2111	Washer (@4)		12
L-036	18009EL-WH06	WHEEL SENSOR BOARD	(6C)	4
	20009EL-WH09	WHEEL SENSOR BOARD	(9C)	
	20009EL-WH12	WHEEL SENSOR BOARD	(12C)	
	20009EL-WH15	WHEEL SENSOR BOARD	(15C)	
L-037	02010SC-3123	Truss Screw (M4*L8)		12
L-038	05016SN-1211	Hex.Nut (M4)		12
L-039	02102200U000	Plate To B/B Cable		4
L-040	02101800B000	Plate Led S/W Board Cable		4
L-041	08300302I000	CONNECTION PLATE	(6C)	8
	08300303I000	CONNECTING PLATE A	(9C)	4
	08300403I000	CONNECTING PLATE B	(9C)	4
	08300304I000	CONNECTION PLATE	(12C)	8
	08300305I000	CONNECTION PLATE "A"	(15C)	4
	08300405I000	CONNECTION PLATE "B"	(15C)	4
L-042	09005SC-3123	Truss Screw (M3*L6)		48
L-043	02103903H000	Wheel Earth 6,9,12C		4
	25124EL-B001	Tension Plat Earth Cable 15C		
L-044	25126EL-B001	Sensor Board To Wheel Earth		4
L-045	11009SC-A001	Stud Screw		48
L-046	03-0000-EMB1	Head On/Off S/W Board 6C,12C		4
	02-0000-EMB1	Head On/Off S/W Board 9C,15C		
L-047	08300400A000	Lamp Cover		4
L-048	08202000A000	TENSION ADJUSTING PLATE HOLDER	(6C)(9C)	8
	08202000I000	TENSION ADJUSTING PLATE HOLDER	(12C)	
	11020PM-B001	TENSION ADJUSTING PLATE HOLDER	(15C)	
L-049	05009SW-1111	Washer (@4-L)		8
L-050	11029SC-4113	Hex. Socket Bolt (M4*L20)		8
L-051	04010MC-7113	Hex.Socket Bolt (M4*L10)		8
L-052	11032PR-T121	Cable Supporter 12C		1
L-053	02023SC-7113	Hex. Socket Bolt (M4*L8)		6
L-054	08003202B000	Cover PLate (R) 6C	(6C)	1

L

Thread Tension Unit

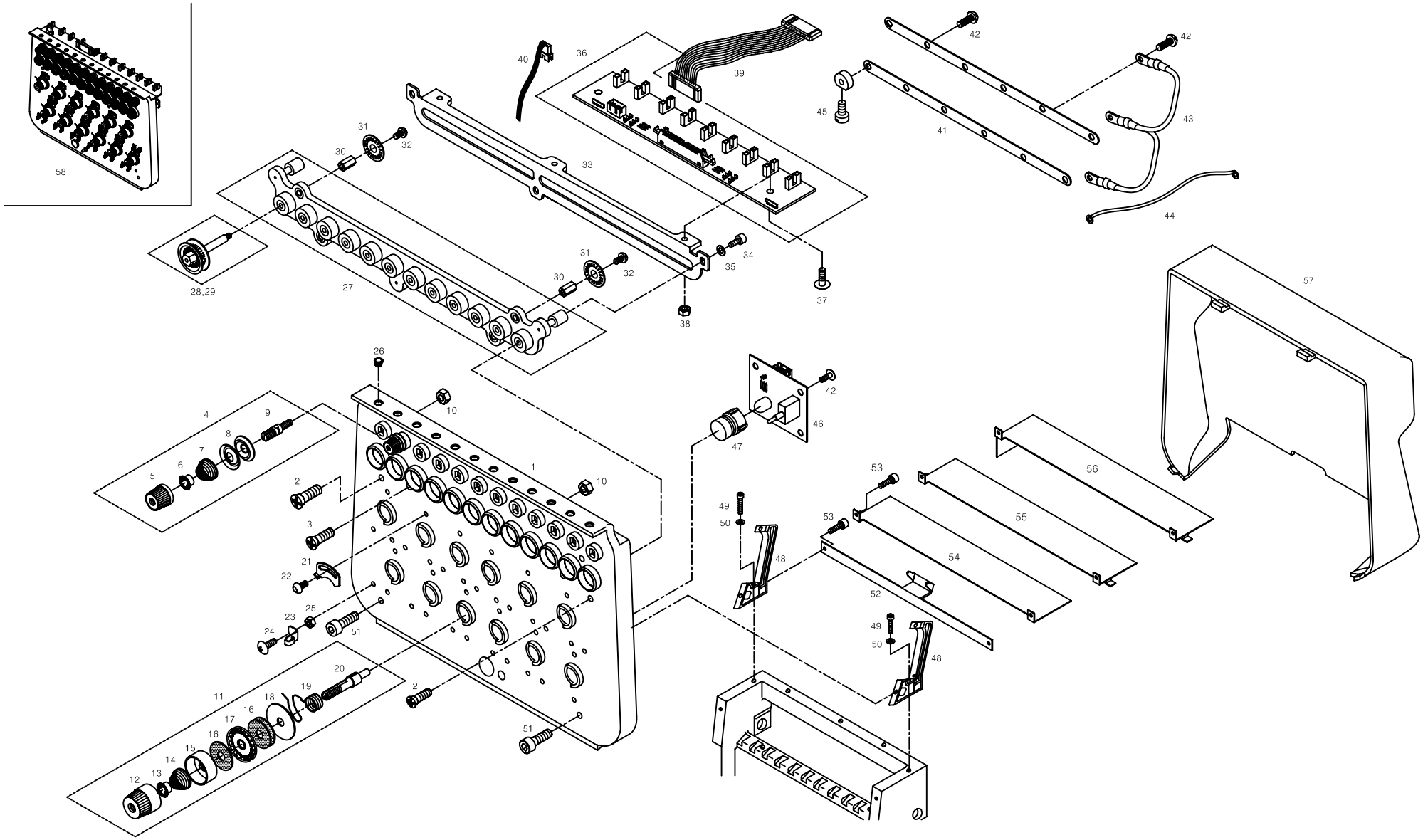

Ref.No	Part No.	Part Names	Q'ty
L-054	02006PR-UK01	Cover PLate (R) (9C)	1
	08003204B000	COVER PLATE (R) 12C (12C)	
	02006PR-UK14	COVER PLATE (R) 15C (15C)	
L-055	11031PR-AB00	Cover Plate 12C	1
L-056	08003302B000	Cover PLate (L) (6C)	1
	02009PR-UK01	Cover PLate (L) (12C)	
	02009PR-UK14	Cover PLate (L) (15C)	
	02009PR-UK02	Cover Plate (L) Uk1202-45 (UK1202)	
	02009PR-UK12	Cover Plate Uk1502-45 (UK1502)	
L-057	08000803I000	TENSION PLATE COVER (9C)	4
	08000804I000	TENSION PLATE COVER (12C)	
	08000805I000	TENSION PLATE COVER (15C)	
L-058	08300002I000	TENSINO UNIT SET (6C)	4
	08300003I000	TENSINO UNIT SET (9C)	
	08300004I000	TENSINO UNIT SET (12C)	
	08300005I000	TENSINO UNIT SET (15C)	

Ref. No	Part No.	Part Names	Q'ty

M1

X-Axis Drive Set (UK1202)

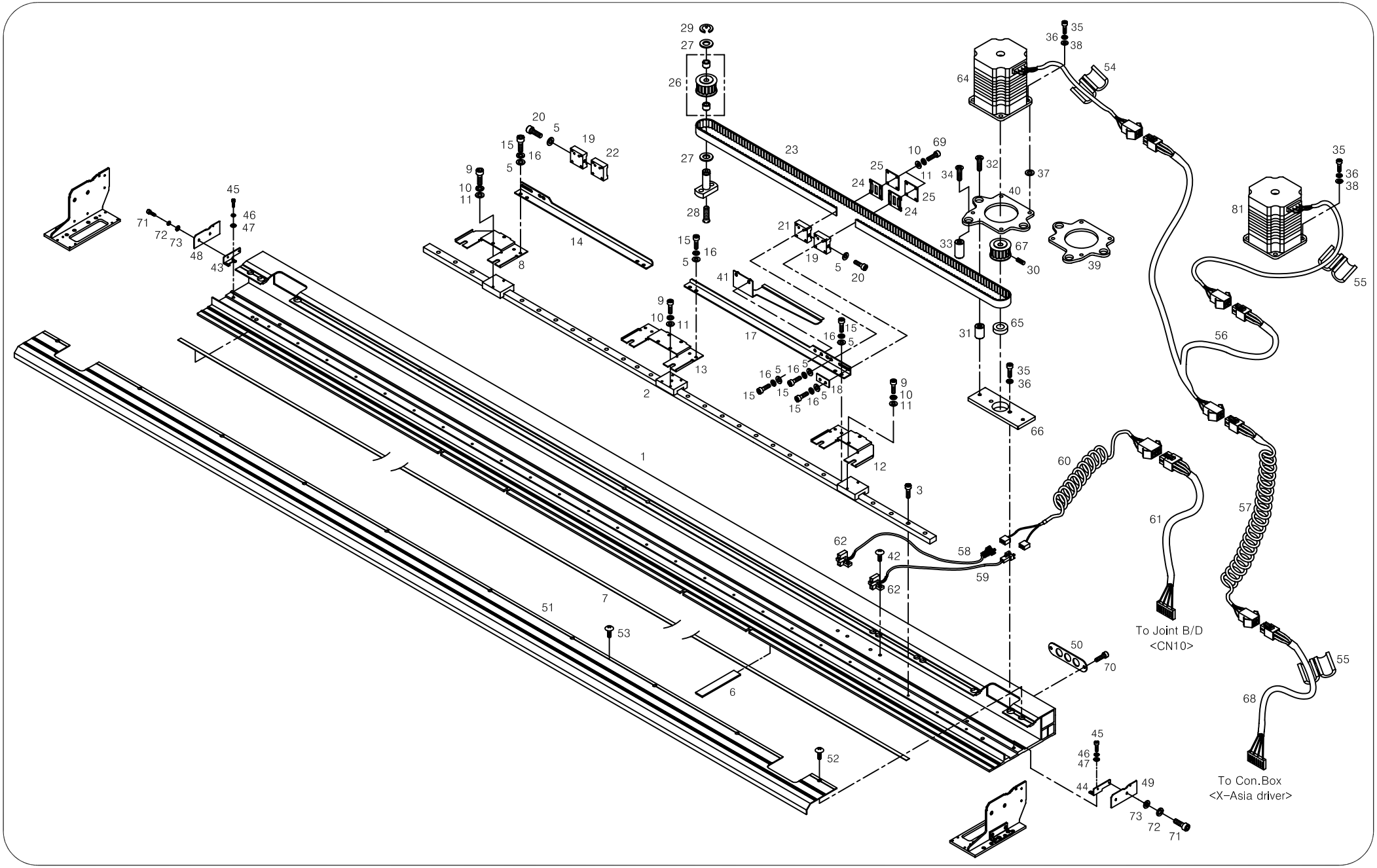

Ref.No	Part No.	Part Names	Q'ty
M1001	GP-008137-01	X-Frame L=1635	1
M1002	15002LM-UK02	X-Lm Guide (Sr15W,L1480)	1
M1003	22006SC-7113	Hex. Socket Bolt (M3*L8)	25
M1006	15062SF-T121	Felt	2
M1007	15006PR-UK02	Tubular Frame Rail Plate	1
M1008	15007PR-UK02	Connecting Plate(L)	1
M1009	22006SC-7113	Hex. Socket Bolt (M3*L8)	8
M1010	11019SW-9115	Spring Washer (3@)	16
M1011	08011SW-1111	Spring Washer (@3-S)	16
M1012	15011PR-UK02	Connecting Plate(R)	1
M1013	15015PR-UK02	Connecting Plate	1
M1014	15019PR-UK02	Lm Block Connecting Plate(L)	1
M1015	02023SC-7113	Hex. Socket Bolt (M4*L8)	18
M1016	02028SW-9115	Spring Washer (@4)	22
M1017	15023PR-UK02	Lm Block Connecting Plate(R)	1
M1018	14020PR-UK01	Space	2
M1019	14045AD-UK01	Belt Bracket (B)	2
M1020	15034SC-4113	Hex. Socket Boit (M4*L45)	2
M1021	14049AD-UK01	Belt Bracket (C)	1
M1022	14048AD-UK01	Belt Bracket (A)	1
M1023	12048BT-T121	X-Axis Timing Belt	1
M1024	14051PR-UK01	Fixing Plate	4
M1025	14052PR-UK01	Fixing Plate Holder	4
M1026	12017PU-T121	Timing Pulley "A"	2
	12018BR-T121	Neddle Bearing Hk1010(Ina)	4
M1027	12019BR-T121	Fiber Washer R-Tw1020	4
M1028	15048SC-4119	Plus Screw (M5*L12)	2
M1029	08044SR-4013	E-Ring (@8)	2
M1030	04014SC-4517	Hex.Socket Set Screw(M5*L5)	4
M1031	14065AD-UK01	Motor Fixing Shaft (A)	4
M1032	15053SC-4119	Plus Screw (M5*L30)	4
M1033	14067AD-UK01	Motor Fixing Shaft (B)	2
M1034	15055SC-4119	Plus Screw (M5*L35)	2
M1035	08076SC-7113	Hex. Socket Bolt (M5*L12)	12
M1036	18048SW-3115	Spring Washer (@5)	12
M1037	15059PR-UK02	X-Motor Space	8
M1038	16018SW-1111	Washer (@5)	8
M1039	15060PR-UK02	X-Motor Base(L)	1
M1040	15061PR-UK02	X-Motor Base(R)	1
M1041	15065PR-UK02	Perception Plate	1

Ref. No	Part No.	Part Names	Q'ty
M1042	06010SC-8118	Plus Screw(M3*L4)	4
M1043	GP-005104-00	X-FRAME SIDE COVER HOLDER (L)	1
M1044	GP-005105-00	X-FRAME SIDE COVER HOLDER (R)	1
M1045	02023SC-7113	Hex. Socket Bolt (M4*L8)	8
M1046	18014SW-3115	Spring Washer (@4-No2)	8
M1047	05009SW-1111	Washer (@4-L)	8
M1048	GP-005106-00	X-AXIS FRAME SIDE COVER (L)	1
M1049	GP-005107-00	X-AXIS FRAME SIDE COVER (R)	1
M1050	15087PR-UK02	Cable Plate For Bushing	1
M1051	GP-008136-00	X-Frame Cover	1
M1052	15042SC-3123	Truss Screw (M4*L6)	8
M1053	18153SC-3123	Plus Screw (M4*L10)	2
M1054	15044EL-T121	Bid (S)	2
M1055	15045EL-UK01	Bid (L)	1
M1056	25013EL-UK02	X-Step Motor Driving Power 3	1
M1057	25019EL-T121	Power Cable 2 (1Ht-19)	1
M1058	25046EL-UK02	X-Original In Sensor (White)	1
M1059	25047EL-UK02	X-Original In Sensor (Black)	1
M1060	25040EL-T121	X-Original In Con. (1Ht-40)	1
M1061	25041EL-UK01	X Original In (4Ht-41)	1
M1062	08102300B000	Half Turn Sensor (Gp1S51V)	2
M1063	03106000U000	Timing Pulley Driving Pin	2
M1064	05100100T000	X-Motor (103H7126-2851)	2
M1065	15077BR-A001	Ball Bearing (698Zz)	2
M1066	03000100U020	X-Motor Fixing Block	2
M1067	14063PU-UK01	Timing Pulley "B"	2
M1068	02101300U040	X-Step Motor Driving Power	1
M1069	03071SC-7113	HEX. SOCKET BOLT (M3*L10)	16
M1070	02023SC-7113	HEX.SOCKET BOLT (M4*L8)	4
M1071	15042SC-3123	Truss Screw (M4*L6)	4
M1072	18015SW-3111	WASHER (4@)	4
M1073	18014SW-3115	SPRING WASHER (@4-NO2)	4

M2

X-Axis Drive Set (UK1204)

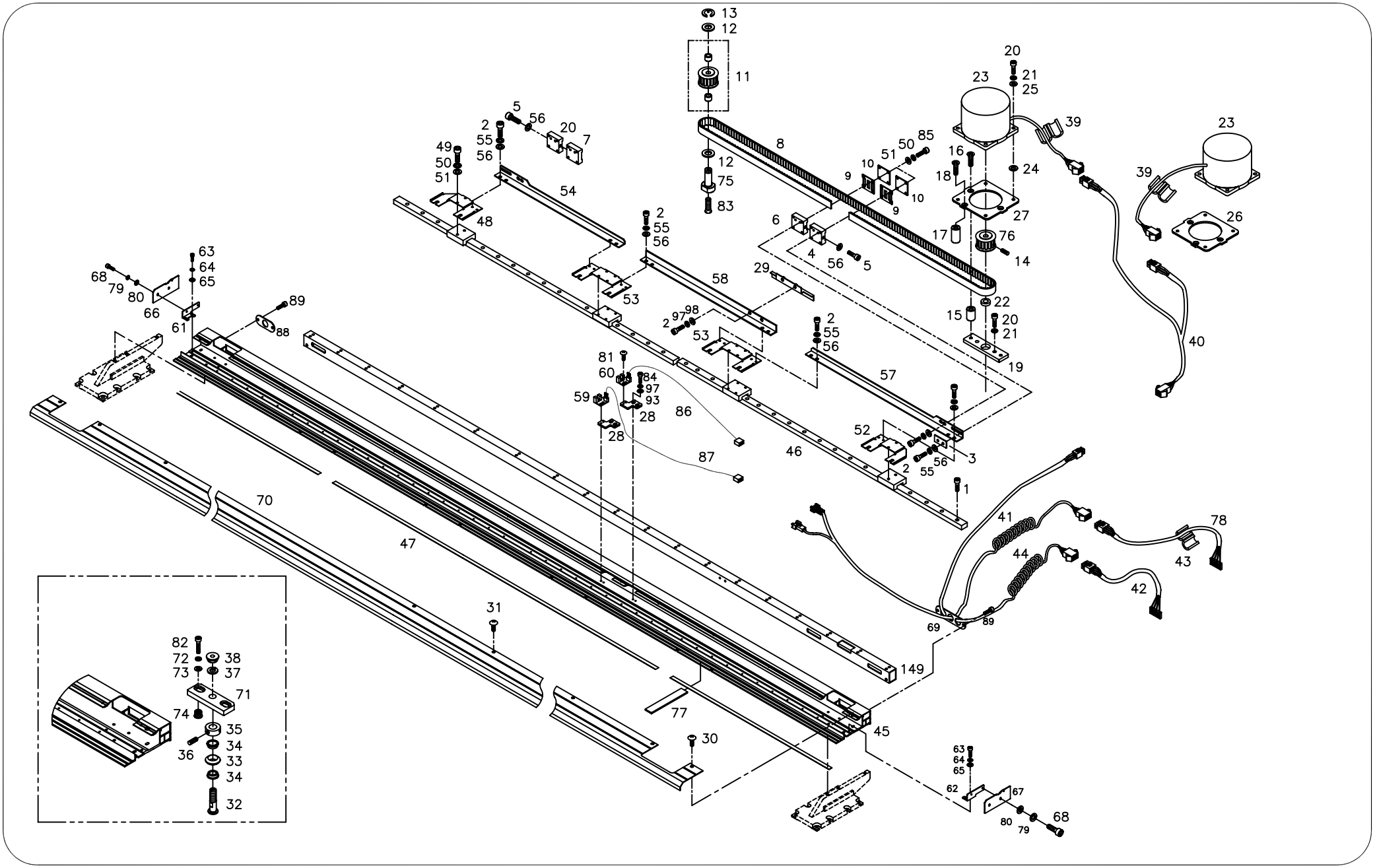

Ref.No	Part No.	Part Names	Q'ty
M2001	22006SC-7113	Hex. Socket Bolt (M3*L8)	62
M2002	02023SC-7113	Hex. Socket Bolt (M4*L8)	32
M2003	14020PR-UK01	Space	2
M2004	14045AD-UK01	Belt Bracket (B)	2
M2005	15034SC-4113	Hex. Socket Boit (M4*L45)	2
M2006	14049AD-UK01	Belt Bracket (C)	1
M2007	14048AD-UK01	Belt Bracket (A)	1
M2008	12048BT-T121	X-Axis Timing Belt	2
M2009	14051PR-UK01	Fixing Plate	4
M2010	14052PR-UK01	Fixing Plate Holder	4
M2011	12017PU-T121	Timing Pulley "A"	2
	12018BR-T121	Neddle Bearing Hk1010(Ina)	4
M2012	12019BR-T121	Fiber Washer R-Tw1020	4
M2013	08044SR-4013	E-Ring (@8)	2
M2014	04014SC-4517	Hex.Socket Set Screw(M5*L5)	4
M2015	14065AD-UK01	Motor Fixing Shaft (A)	4
M2016	15053SC-4119	Plus Screw (M5*L30)	4
M2017	14067AD-UK01	Motor Fixing Shaft (B)	2
M2018	15055SC-4119	Plus Screw (M5*L35)	2
M2019	14069AD-UK01	Motor Block	2
M2020	08076SC-7113	Hex. Socket Bolt (M5*L12)	12
M2021	18048SW-3115	Spring Washer (@5)	12
M2022	14071BR-UK01	Bearing Bc616Zz	2
M2023	15076AF-UK01	X-Motor (103H8221-5044)	2
M2024	15061PR-UK01	Motor Space (@5*@11*2T)	8
M2025	16018SW-1111	Washer (@5)	8
M2026	14074PR-UK01	Motor Base (L)	1
M2027	14075PR-UK01	Motor Base (R)	1
M2028	15067PR-UK01	Sensor Plate	2
M2029	15071PR-UK01	Perception Plate	1
M2030	15042SC-3123	Truss Screw (M4*L6)	12
M2031	18153SC-3123	Plus Screw (M4*L10)	2
M2032	15104CW-UK01	Roller Stud Bolt	2
M2033	15130AF-A001	Roller Guide	2
M2034	15106BR-A001	Flange Bearing (1280Zz)	4
M2035	15107CW-UK01	Roller Collar	2
M2036	03022SC-4517	Hex. Socket Set Screw(M4*L5)	4
M2037	15095SW-3115	Spring Washer (@8)	2
M2038	04032SN-A001	Hex. Nut (M8-No2)	2
M2039	15044EL-T121	Bid (S)	2

Ref. No	Part No.	Part Names	Q'ty
M2040	25014EL-UK01	Calble (4Ht-14)	1
M2041	25019EL-T121	Power Cable 2 (1Ht-19)	1
M2042	25041EL-UK01	X Original In (4Ht-41)	1
M2043	15045EL-UK01	Bid (L)	1
M2044	25038EL-UK06	Cable (25-38)	1
M2045	GP-014076-00	X-LM GUIDE FRAME L2635	1
M2046	03200500UK40	X-Axis L/M Guide 1160L	2
M2047	03200700UK40	Tubular Frame Rail Plate	1
M2048	15007PR-UK02	Connecting Plate(L)	1
M2049	02015SC-7113	Hex.Socket Bolt(M4*L10)	12
M2050	18014SW-3115	Spring Washer (@4-No2)	12
M2051	18015SW-3111	Washer (4@)	12
M2052	15011PR-UK02	Connecting Plate(R)	1
M2053	15015PR-UK02	Connecting Plate	2
M2054	03200800UK40	L/M Block Connecting Plate (L)	1
M2055	18014SW-3115	Spring Washer (@4-No2)	30
M2056	18015SW-3111	Washer (4@)	30
M2057	03200900UK40	L/M Block Connecting Plate (R)	1
M2058	03201000UK40	L/M Block Connecting Plate	1
M2059	03201700UH00	X-Positioning Sonsor	1
M2060	03201600UH00	X-Positioning Sensor	1
M2061	GP-005104-00	X-FRAME SIDE COVER HOLDER (L)	1
M2062	GP-005105-00	X-FRAME SIDE COVER HOLDER (R)	1
M2063	02023SC-7113	Hex. Socket Bolt (M4*L8)	8
M2064	18014SW-3115	Spring Washer (@4-No2)	8
M2065	05009SW-1111	Washer (@4-L)	8
M2066	GP-005106-00	X-AXIS FRAME SIDE COVER (L)	1
M2067	GP-005107-00	X-AXIS FRAME SIDE COVER (R)	1
M2068	15042SC-3123	Truss Screw (M4*L6)	4
M2069	15087PR-UK02	Cable Plate For Bushing	1
M2070	03201300UK40	X-Cover (L=2635)	1
M2071	15100CL-UK01	Roller Fixed Plate	2
M2072	18014SW-3115	Spring Washer (@4-No2)	4
M2073	18015SW-3111	Washer (4@)	4
M2074	03201900UH00	X-Frame Screw Bush	4
M2075	03106000U000	Timing Pulley Driving Pin	2
M2076	14063PU-UK01	Timing Pulley "B"	2
M2077	03201800UH00	Felt (190*30*1.5T)	4
M2078	02101300U040	Cable (Sh-13-1)	1
M2079	18015SW-3111	WASHER (4@)	4

M2

X-Axis Drive Set (UK1204)

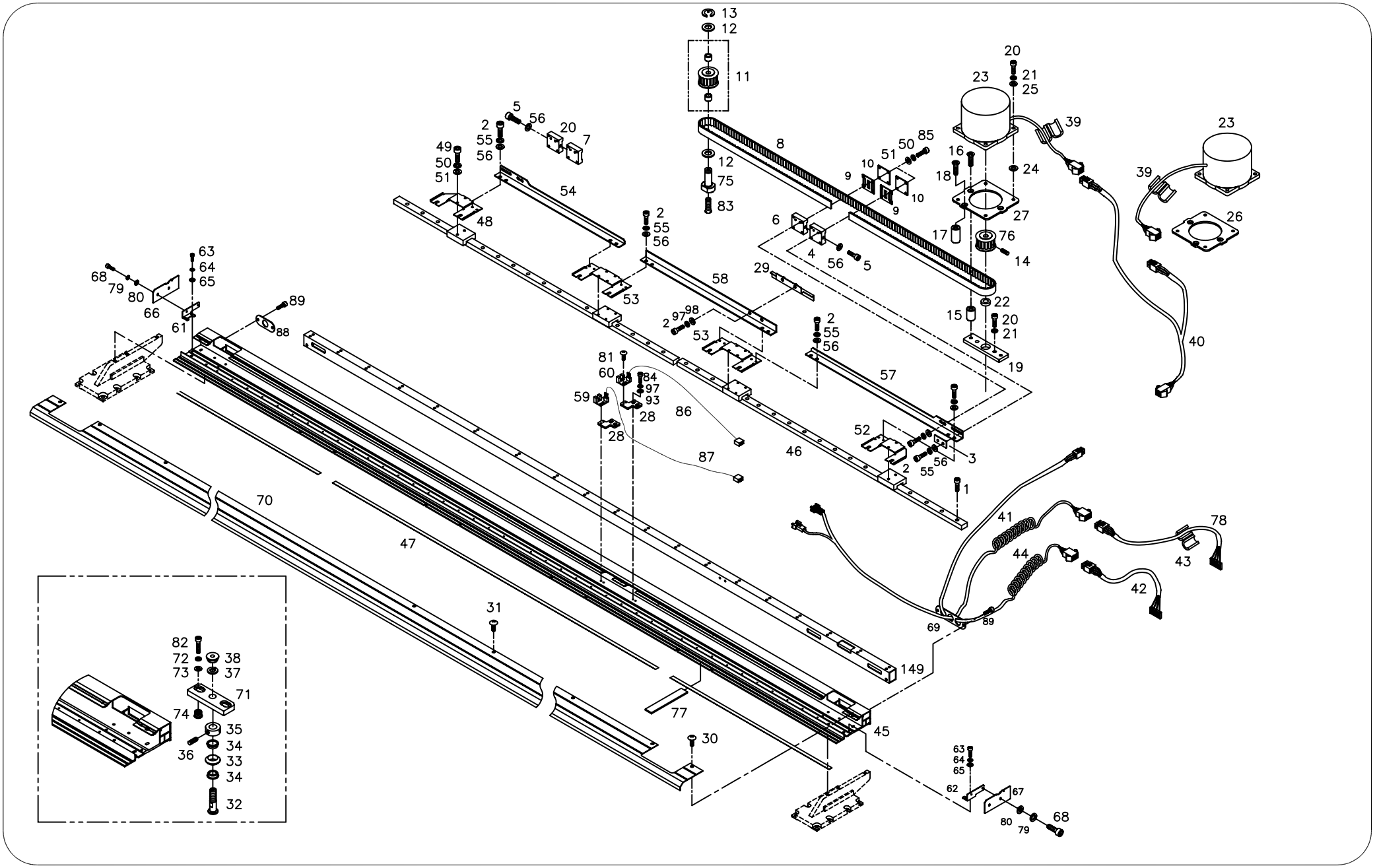

Ref.No	Part No.	Part Names	Q'ty
M2080	18014SW-3115	SPRING WASHER (@4-NO2)	4
M2081	07016SC-7113	HEX.SOCKET BOLT (M4*L12)	8
M2082	03006MC-8118	PLUS SCREW (M3*L6)	4
M2083	07016SC-7113	HEX.SOCKET BOLT (M4*L12)	4
M2084	03071SC-7113	HEX. SOCKET BOLT (M3*L10)	4
M2085	02015SC-7113	HEX.SOCKET BOLT(M4*L10)	4
M2086	03071SC-7113	HEX. SOCKET BOLT (M3*L10)	16
M2087	25052EL-UK01	LAST-SENSOR (BLACK) 4HT-52	1
M2088	25053EL-UK01	LAST-SENSOR (WHITE) 4HT-53	1
M2089	15082PR-W121	FIXING PLATE FOR BUSHING	1
M2090	02023SC-7113	HEX.SOCKET BOLT (M4*L8)	4
M2091	GP-012663-00	X-Frame Support Bar	1

Ref. No	Part No.	Part Names	Q'ty

M3

X-Axis Drive Set (UK1206)

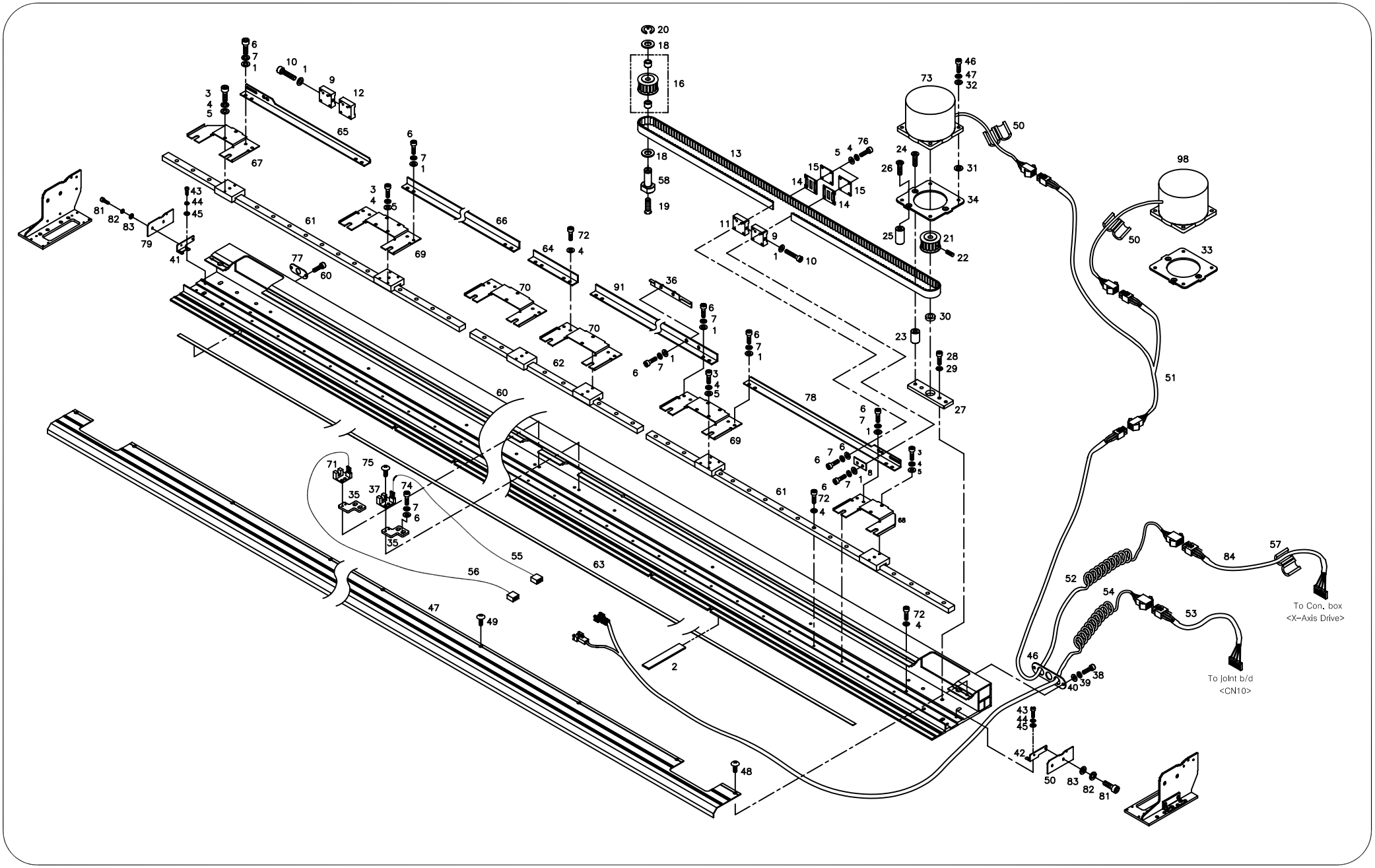

Ref.No	Part No.	Part Names	Q'ty
M3001	05009SW-1111	Washer (@4-L)	28
M3002	15062SF-T121	Felt	6
M3003	22006SC-7113	Hex. Socket Bolt (M3*L8)	16
M3004	11019SW-9115	Spring Washer (3@)	40
M3005	08011SW-1111	Spring Washer (@3-S)	40
M3006	02023SC-7113	Hex. Socket Bolt (M4*L8)	26
M3007	02028SW-9115	Spring Washer (@4)	28
M3008	14020PR-UK01	Space	2
M3009	14045AD-UK01	Belt Bracket (B)	2
M3010	15034SC-4113	Hex. Socket Boit (M4*L45)	2
M3011	14049AD-UK01	Belt Bracket (C)	1
M3012	14048AD-UK01	Belt Bracket (A)	1
M3013	12048BT-T121	X-Axis Timing Belt	2
M3014	14051PR-UK01	Fixing Plate	4
M3015	14052PR-UK01	Fixing Plate Holder	4
M3016	12017PU-T121	Timing Pulley "A"	2
M3017	12018BR-T121	Neddle Bearing Hk1010(Ina)	4
M3018	12019BR-T121	Fiber Washer R-Tw1020	4
M3019	15048SC-4119	Plus Screw (M5*L12)	2
M3020	08044SR-4013	E-Ring (@8)	2
M3021	14063PU-UK01	Timing Pulley "B"	2
M3022	04014SC-4517	Hex.Socket Set Screw(M5*L5)	4
M3023	14065AD-UK01	Motor Fixing Shaft (A)	4
M3024	15053SC-4119	Plus Screw (M5*L30)	4
M3025	14067AD-UK01	Motor Fixing Shaft (B)	2
M3026	15055SC-4119	Plus Screw (M5*L35)	2
M3027	14069AD-UK01	Motor Block	2
M3028	08076SC-7113	Hex. Socket Bolt (M5*L12)	12
M3029	18048SW-3115	Spring Washer (@5)	12
M3030	14071BR-UK01	Bearing Bc616Zz	2
M3031	15061PR-UK01	Motor Space (@5*@11*2T)	8
M3032	16018SW-1111	Washer (@5)	8
M3033	14074PR-UK01	Motor Base (L)	1
M3034	14075PR-UK01	Motor Base (R)	1
M3035	15067PR-UK01	Sensor Plate	2
M3036	15071PR-UK01	Perception Plate	1
M3037	15043EL-UK01	X-Positioning Sensor	1
M3038	02023SC-7113	Hex.Socket Bolt (M4*L8)	4
M3039	18014SW-3115	Spring Washer (@4-No2)	2
M3040	18015SW-3111	Washer (4@)	2

Ref. No	Part No.	Part Names	Q'ty
M3041	GP-005104-00	X-FRAME SIDE COVER HOLDER (L)	1
M3042	GP-005105-00	X-FRAME SIDE COVER HOLDER (R)	1
M3043	02023SC-7113	Hex. Socket Bolt (M4*L8)	8
M3044	18014SW-3115	Spring Washer (@4-No2)	8
M3045	05009SW-1111	Washer (@4-L)	8
M3046	14014PR-UK01	Bushing Plate	1
M3047	GP-008150-01	X-Frame Cover L=3639	1
M3048	15042SC-3123	Truss Screw (M4*L6)	17
M3049	18153SC-3123	Plus Screw (M4*L10)	2
M3050	15044EL-T121	Bid (S)	2
M3051	25010EL-UK06	Cable (25-10)	1
M3052	25009EL-UK06	Cable (25-09)	1
M3053	25038EL-UK06	Cable (25-38)	1
M3054	25041EL-UK01	X Original In (4Ht-41)	1
M3055	25052EL-UK01	Last-Sensor (Black) 4Ht-52	1
M3056	25053EL-UK01	Last-Sensor (White) 4Ht-53	1
M3057	15045EL-UK01	Bid (L)	1
M3058	03106000U000	Timing Pulley Driving Pin	2
M3059	02101300U000	CABLE (SH-13-2)	1
M3060	GP-008149-01	X-FRAME (L3661)	1
M3061	03200500UK40	X-AXIS L/M GUIDE (1160L)	2
M3062	03200500UK60	X-AXIS L/M GUIDE (760L)	1
M3063	03200600UK60	TUBULAR FRAME RAIL PLATE (L3630)	1
M3064	03200800UK60	CONNECTING PLATE FOR LM BLOCK (L119)	1
M3065	03200800UK40	L/M BLOCK CONNECTING PLATE (L)	1
M3066	03200900UK60	CONNECTING PLATE (A) (L714.5)	2
M3067	15007PR-UK02	CONNECTING PLATE(L)	1
M3068	15011PR-UK02	CONNECTING PLATE(R)	1
M3069	15015PR-UK02	CONNECTING PLATE	2
M3070	03200700UK60	CONNECTING PLATE "A"	2
M3071	15044EL-UK01	X-Positioning Sensor	1
M3072	03071SC-7113	HEX. SOCKET BOLT (M3*L10)	94
M3073	15076AF-UK01	X-MOTOR (103H8221-5044)	2
M3074	02015SC-7113	HEX.SOCKET BOLT(M4*L10)	4
M3075	03006MC-8118	PLUS SCREW (M3*L6)	4
M3076	03071SC-7113	HEX. SOCKET BOLT (M3*L10)	16
M3077	15082PR-W121	FIXING PLATE FOR BUSHING	1
M3078	03200900UK40	L/M BLOCK CONNECTING PLATE (R)	1
M3079	GP-005106-00	X-AXIS FRAME SIDE COVER (L)	1
M3080	GP-005107-00	X-AXIS FRAME SIDE COVER (R)	1

M3

X-Axis Drive Set (UK1206)

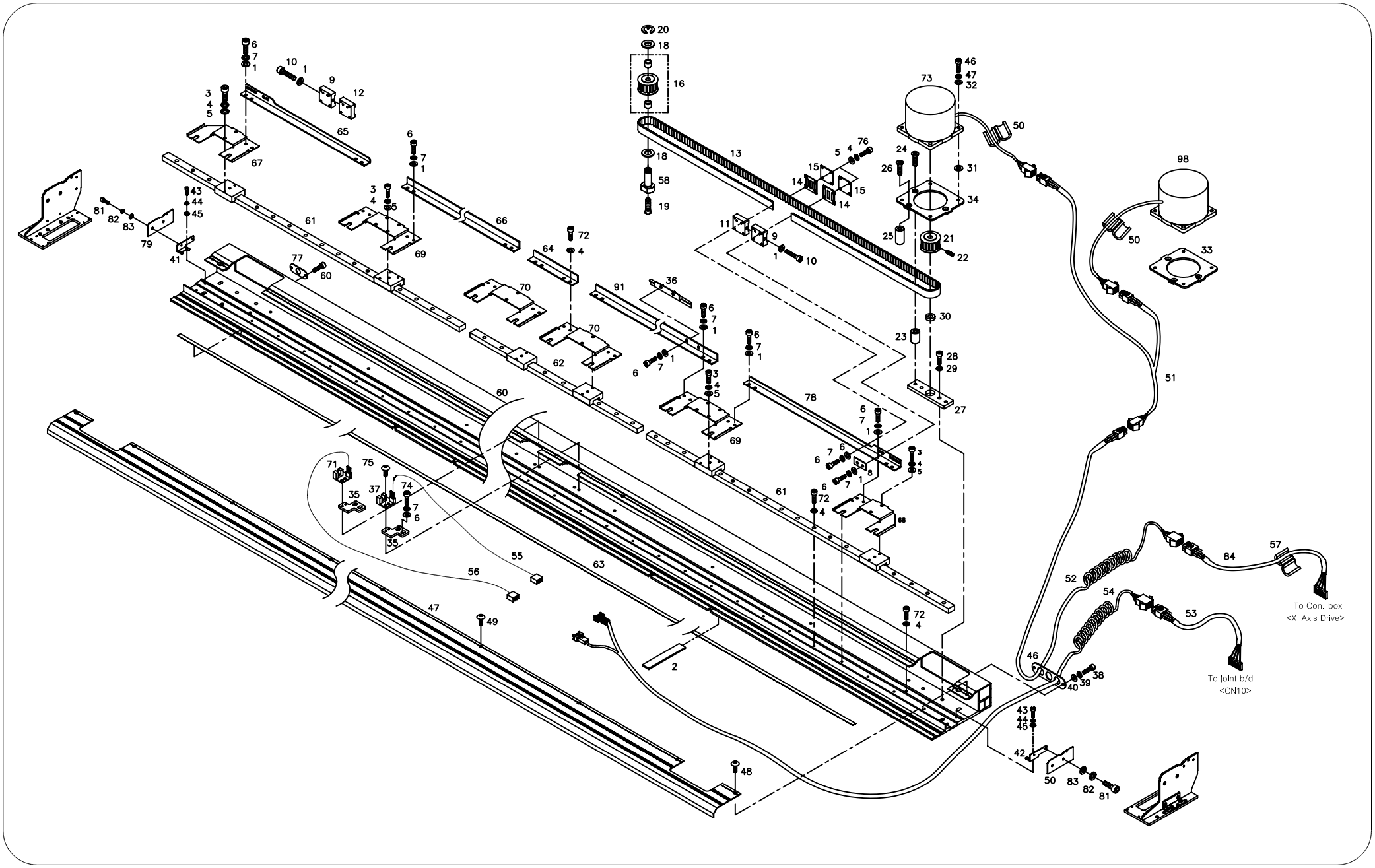

Ref.No	Part No.	PartNames	Q'ty
M3081	15042SC-3123	Truss Screw (M4*L6)	4
M3082	18015SW-3111	WASHER (4@)	4
M3083	18014SW-3115	SPRING WASHER (@4-NO2)	4

Ref. No	Part No.	Part Names	Q'ty

M4 X-Axis Drive System (UH1506C)

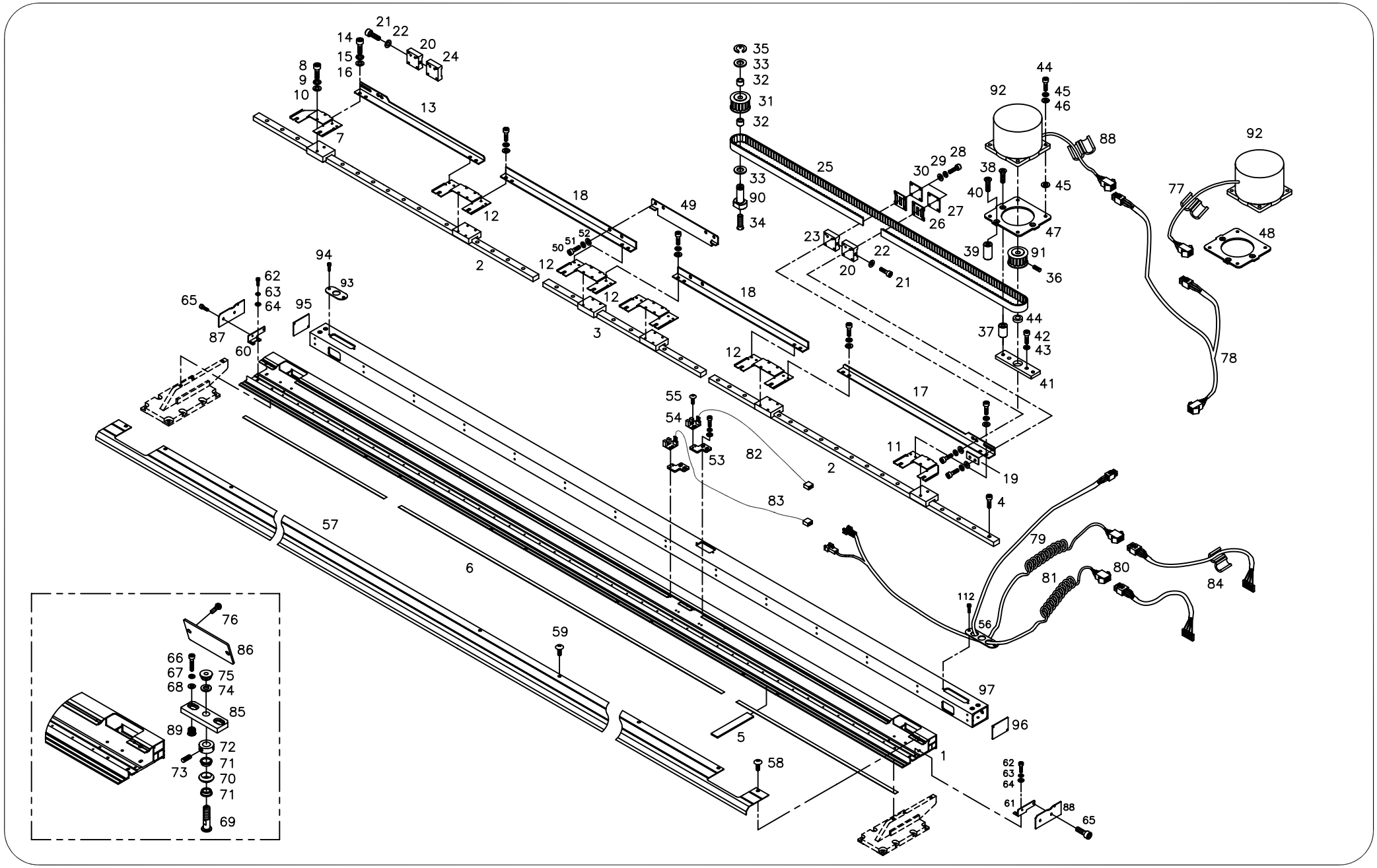

Ref.No	Part No.	Part Names	Q'ty
M4001	GP-005120-01	X-LM GUIDE FRAME L2935	1
M4002	03200500UH00	X-Axis L/M Guide "A"	2
M4003	03200600UH00	X-Axis L/M "B"	1
M4004	22006SC-7113	Hex. Socket Bolt (M3*L8)	46
M4005	15062SF-T121	Felt	8
M4006	03200700UH00	Tubular Frame Rail Plate	1
M4007	15007PR-UK02	Connecting Plate(L)	1
M4008	02015SC-7113	Hex.Socket Bolt(M4*L10)	8
M4009	02028SW-9115	Spring Washer (@4)	8
M4010	02063SW-1111	Washer(@4)	8
M4011	15011PR-UK02	Connecting Plate(R)	1
M4012	15015PR-UK02	Connecting Plate	4
M4013	03200800UH00	L/M Block Connecting Plate (L)	1
M4014	02023SC-7113	Hex. Socket Bolt (M4*L8)	16
M4015	02028SW-9115	Spring Washer (@4)	16
M4016	05009SW-1111	Washer (@4-L)	16
M4017	03200900UH00	L/M Block Connecting Plate (R)	1
M4018	03201000UH00	L/M Block Connecting Plate	2
M4019	14020PR-UK01	Space	2
M4020	14045AD-UK01	Belt Bracket (B)	2
M4021	15034SC-4113	Hex. Socket Boit (M4*L45)	2
M4022	05009SW-1111	Washer (@4-L)	2
M4023	14049AD-UK01	Belt Bracket (C)	1
M4024	14048AD-UK01	Belt Bracket (A)	1
M4025	03201100UH00	X-Timming Belt (L=1260)	2
M4026	14051PR-UK01	Fixing Plate	4
M4027	14052PR-UK01	Fixing Plate Holder	4
M4028	03071SC-A001	Hex.Scoket Bolt (M3*L15)	16
M4029	11019SW-9115	Spring Washer (3@)	16
M4030	08011SW-1111	Spring Washer (@3-S)	16
M4031	12017PU-T121	Timing Pulley "A"	2
M4032	12018BR-T121	Neddle Bearing Hk1010(Ina)	4
M4033	12019BR-T121	Fiber Washer R-Tw1020	4
M4034	15048SC-4119	Plus Screw (M5*L12)	2
M4035	08044SR-4013	E-Ring (@8)	2
M4036	04014SC-4517	Hex.Socket Set Screw(M5*L5)	4
M4037	14065AD-UK01	Motor Fixing Shaft (A)	4
M4038	15053SC-4119	Plus Screw (M5*L30)	4
M4039	14067AD-UK01	Motor Fixing Shaft (B)	2
M4040	15055SC-4119	Plus Screw (M5*L35)	2

Ref. No	Part No.	Part Names	Q'ty
M4041	14069AD-UK01	Motor Block	2
M4042	08076SC-7113	Hex. Socket Bolt (M5*L12)	20
M4043	18048SW-3115	Spring Washer (@5)	20
M4044	14071BR-UK01	Bearing Bc616Zz	2
M4045	15061PR-UK01	Motor Space (@5*@11*2T)	8
M4046	16018SW-1111	Washer (@5)	8
M4047	14074PR-UK01	Motor Base (L)	1
M4048	14075PR-UK01	Motor Base (R)	1
M4049	03201200UH00	X-Moving Sensor Plate	1
M4050	02023SC-7113	Hex. Socket Bolt (M4*L8)	6
M4051	02028SW-9115	Spring Washer (@4)	6
M4052	05009SW-1111	Washer (@4-L)	6
M4053	15067PR-UK01	Sensor Plate	2
M4054	15043EL-UK01	X-Positioning Sensor	2
M4055	06010AF-8118	Plus Screw(M3*L4)	4
M4056	15087PR-UK02	Cable Plate For Bushing	1
M4057	03201300UH00	X-Cover (L=2931)	1
M4058	15042SC-3123	Truss Screw (M4*L6)	12
M4059	18153SC-3123	Plus Screw (M4*L10)	2
M4060	GP-005104-00	X-FRAME SIDE COVER HOLDER (L)	1
M4061	GP-005105-00	X-FRAME SIDE COVER HOLDER (R)	1
M4062	02023SC-7113	Hex. Socket Bolt (M4*L8)	8
M4063	02028SW-9115	Spring Washer (@4)	8
M4064	05009SW-1111	Washer (@4-L)	8
M4065	15042SC-3123	Truss Screw (M4*L6)	4
M4066	02023SC-7113	Hex.Socket Bolt (M4*L8)	4
M4067	18014SW-3115	Spring Washer (@4-No2)	4
M4068	18015SW-3111	Washer (4@)	4
M4069	15104CW-UK01	Roller Stud Bolt	4
M4070	15130AF-A001	Roller Guide	4
M4071	15106BR-A001	Flange Bearing (1280Zz)	4
M4072	15107CW-UK01	Roller Collar	4
M4073	03022SC-4517	Hex. Socket Set Screw(M4*L5)	8
M4074	18048SW-3115	Spring Washer (5@)	4
M4075	04032SN-A001	Hex. Nut (M8-No2)	2
M4076	22006SC-7113	Hex. Socket Bolt (M3*L8)	2
M4077	15044EL-T121	Bid (S)	2
M4078	02101000UH60	Cable (25-10)	1
M4079	25009EL-UK06	Cable (25-09)	1
M4080	25038EL-UK06	Cable (25-38)	1

M4 X-Axis Drive System (UH1506C)

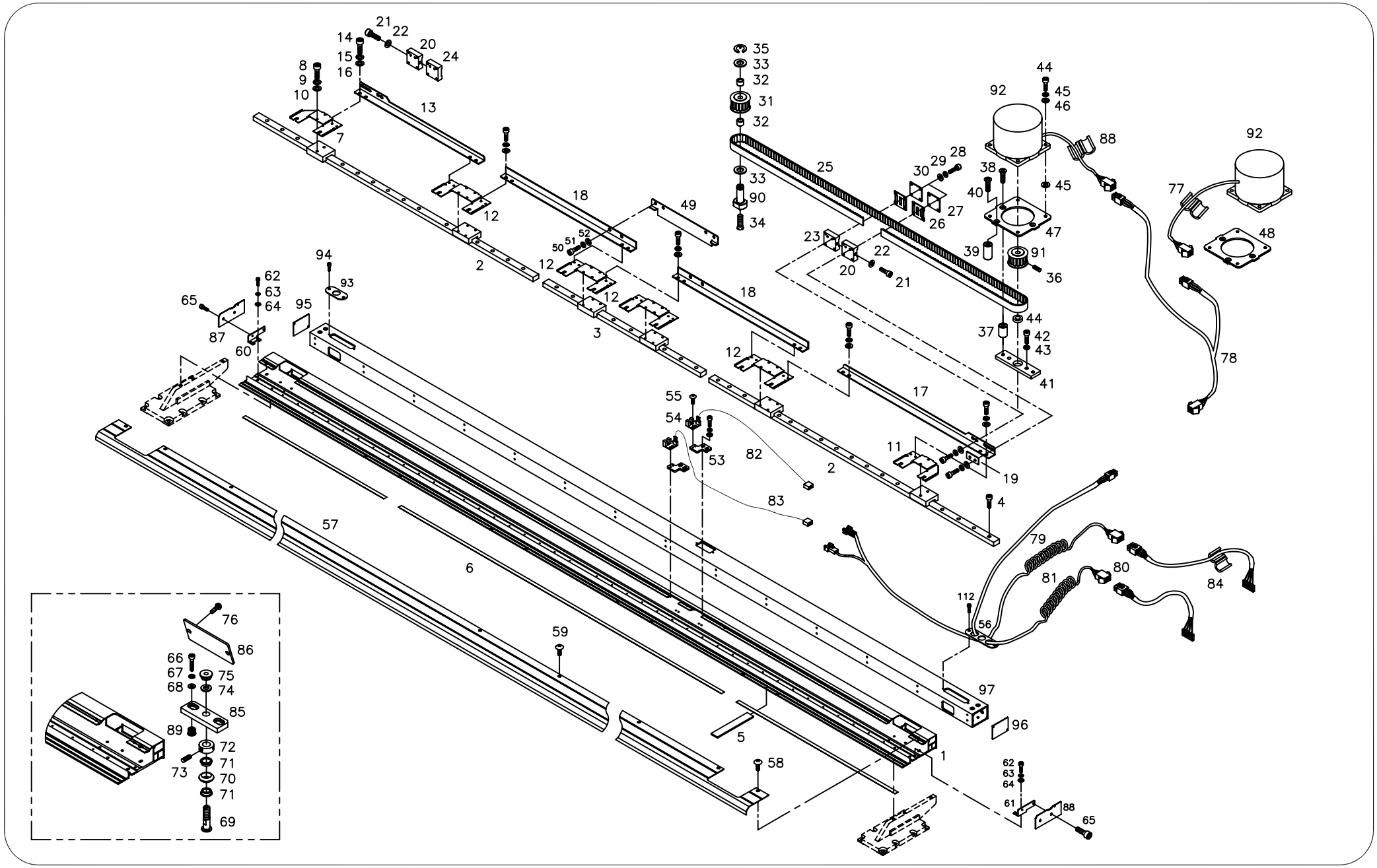

Ref.No	Part No.	Part Names	Q'ty
M4081	25041EL-UK01	X Original In (4Ht-41)	1
M4082	25052EL-UK01	Last-Sensor (Black) 4Ht-52	1
M4083	25053EL-UK01	Last-Sensor (White) 4Ht-53	1
M4084	15045EL-UK01	Bid (L)	1
M4085	15100CL-UK01	Roller Fixed Plate	2
M4086	03000100UH00	Roller Plate Cover	2
M4087	GP-005106-00	X-AXIS FRAME SIDE COVER (L)	1
M4088	GP-005107-00	X-AXIS FRAME SIDE COVER (R)	1
M4089	03201900UH00	X-Frame Screw Bush	4
M4090	03106000U000	Timing Pulley Driving Pin	2
M4091	14063PU-UK01	Timing Pulley "B"	2
M4092	15076AF-UK01	X-Motor	2
M4093	15082PR-W121	FIXING PLATE FOR BUSHING	1
M4094	02023SC-7113	HEX.SOCKET BOLT (M4*L8)	4
M4095	GP-005108-00	X-FRAME SUPPORT BAR COVER(L)	1
M4096	GP-005109-00	X-FRAME SUPPORT BAR COVER(R)	1
M4097	GP-005121-00	X-FRAME SUPPORT BAR L2931	1

Ref. No	Part No.	Part Names	Q'ty

M5 X-Axis Drive System (UH1508)

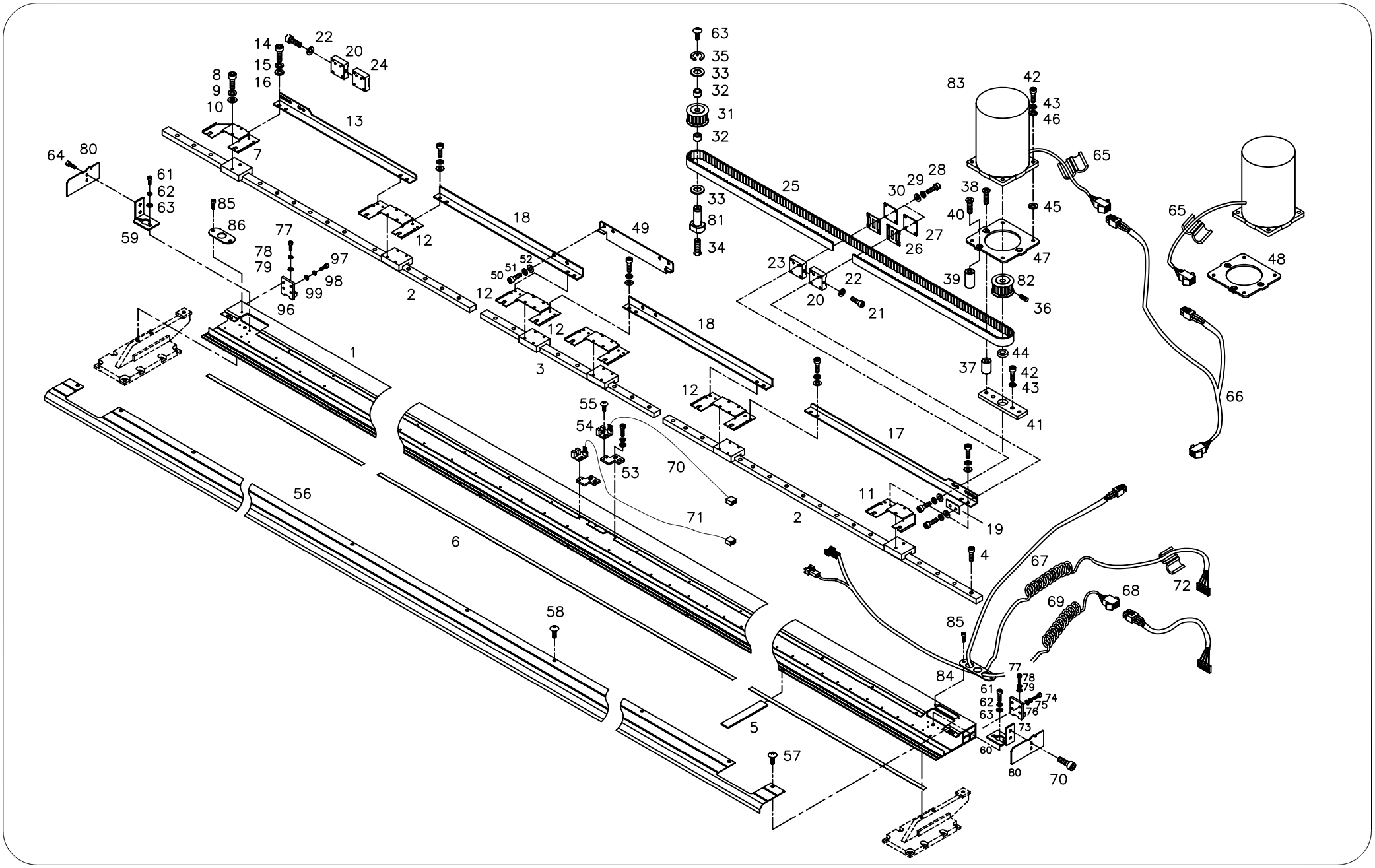

Ref.No	Part No.	Part Names	Q'ty
M5001	GP-005201-01	X-Lm Guide Frame L3861	1
M5002	03200500UH80	X-Axis L/M Guide "A"	2
M5003	03200500UK60	X-Axis L/M Guide 760L	1
M5004	22006SC-7113	Hex. Socket Bolt (M3*L8)	46
M5005	15062SF-T121	Felt	8
M5006	03200700UH80	Tubular Frame Rail Plate	1
M5007	15007PR-UK02	Connecting Plate(L)	1
M5008	02015SC-7113	Hex.Socket Bolt(M4*L10)	8
M5009	02028SW-9115	Spring Washer (@4)	8
M5010	02063SW-1111	Washer(@4)	8
M5011	15011PR-UK02	Connecting Plate(R)	1
M5012	15015PR-UK02	Connecting Plate	4
M5013	03200800UH80	L/M Block Connecting Plate (L)	1
M5014	02023SC-7113	Hex. Socket Bolt (M4*L8)	16
M5015	02028SW-9115	Spring Washer (@4)	16
M5016	05009SW-1111	Washer (@4-L)	16
M5017	03200900UH80	L/M Block Connecting Plate (R)	1
M5018	03201000UH80	L/M Block Connecting Plate	2
M5019	14020PR-UK01	Space	2
M5020	14045AD-UK01	Belt Bracket (B)	2
M5021	15034SC-4113	Hex. Socket Boit (M4*L45)	2
M5022	05009SW-1111	Washer (@4-L)	2
M5023	14049AD-UK01	Belt Bracket (C)	1
M5024	14048AD-UK01	Belt Bracket (A)	1
M5025	03201100UH80	X-Timming Belt (L=1420)	2
M5026	14051PR-UK01	Fixing Plate	4
M5027	14052PR-UK01	Fixing Plate Holder	4
M5028	03071SC-A001	Hex.Scoket Bolt (M3*L15)	16
M5029	11019SW-9115	Spring Washer (3@)	16
M5030	08011SW-1111	Spring Washer (@3-S)	16
M5031	12017PU-T121	Timing Pulley16At5-015-Af-Ae	2
M5032	12018BR-T121	Timing Pulley Baring 6901	4
M5033	12019BR-T121	Fiber Washer R-Tw1020	4
M5034	15048SC-4119	Plus Screw (M5*L12)	2
M5035	08044SR-4013	E-Ring (@8)	2
M5036	04014SC-4517	Hex.Socket Set Screw(M5*L5)	4
M5037	14065AD-UK01	Motor Fixing Shaft (A)	4
M5038	15053SC-4119	Plus Screw (M5*L30)	4
M5039	14067AD-UK01	Motor Fixing Shaft (B)	2
M5040	15055SC-4119	Plus Screw (M5*L35)	2

Ref. No	Part No.	Part Names	Q'ty
M5041	03201600UH80	Motor Block	2
M5042	08076SC-7113	Hex. Socket Bolt (M5*L12)	20
M5043	18048SW-3115	Spring Washer (@5)	20
M5044	14071BR-UK01	Bearing Bc616Zz	2
M5045	15061PR-UK01	Motor Space (@5*@11*2T)	8
M5046	16018SW-1111	Washer (@5)	8
M5047	14074PR-UK01	Motor Base (L)	1
M5048	14075PR-UK01	Motor Base (R)	1
M5049	03201200UH00	X-Moving Sensor Plate	1
M5050	02023SC-7113	Hex. Socket Bolt (M4*L8)	6
M5051	02028SW-9115	Spring Washer (@4)	6
M5052	05009SW-1111	Washer (@4-L)	6
M5053	15067PR-UK01	Sensor Plate	2
M5054	15043EL-UK01	X-Positioning Sensor	2
M5055	06010AF-8118	Plus Screw(M3*L4)	4
M5056	03201300UH80	X-Cover (L=3845.6)	1
M5057	15042SC-3123	Truss Screw (M4*L6)	12
M5058	18153SC-3123	Plus Screw (M4*L10)	2
M5059	03201400UH80	X-Frame Side Cover Holder (L)	1
M5060	03201500UH80	X-Frame Side Cover Holder (R)	1
M5061	02023SC-7113	Hex. Socket Bolt (M4*L8)	8
M5062	02028SW-9115	Spring Washer (@4)	8
M5063	05009SW-1111	Washer (@4-L)	8
M5064	15042SC-3123	Truss Screw (M4*L6)	4
M5065	15044EL-T121	Bid (S)	2
M5066	02101500UH80	Cable (Sh-15-5)	1
M5067	25009EL-UK06	Cable (25-09)	1
M5068	25038EL-UK06	Cable (25-38)	1
M5069	25041EL-UK01	X Original In (4Ht-41)	1
M5070	02104800UH60	Last-Sensor (Black) 4Ht-48	1
M5071	02104900UH60	Last-Sensor (White) 4Ht-49	1
M5072	15045EL-UK01	Bid (L)	1
M5073	03101500UH00	Bracket For X-Y Sub Connector	2
M5074	02023SC-7113	Hex.Socket Bolt (M4*L8)	8
M5075	18015SW-3111	Washer (4@)	8
M5076	18014SW-3115	Spring Washer (@4-No2)	8
M5077	02015SC-7113	Hex.Socket Bolt(M4*L10)	2
M5078	18015SW-3111	Washer (4@)	2
M5079	18014SW-3115	Spring Washer (@4-No2)	2
M5080	03000200UH80	X-Axis Frame Side Cover	2

M5 X-Axis Drive System (UH1508)

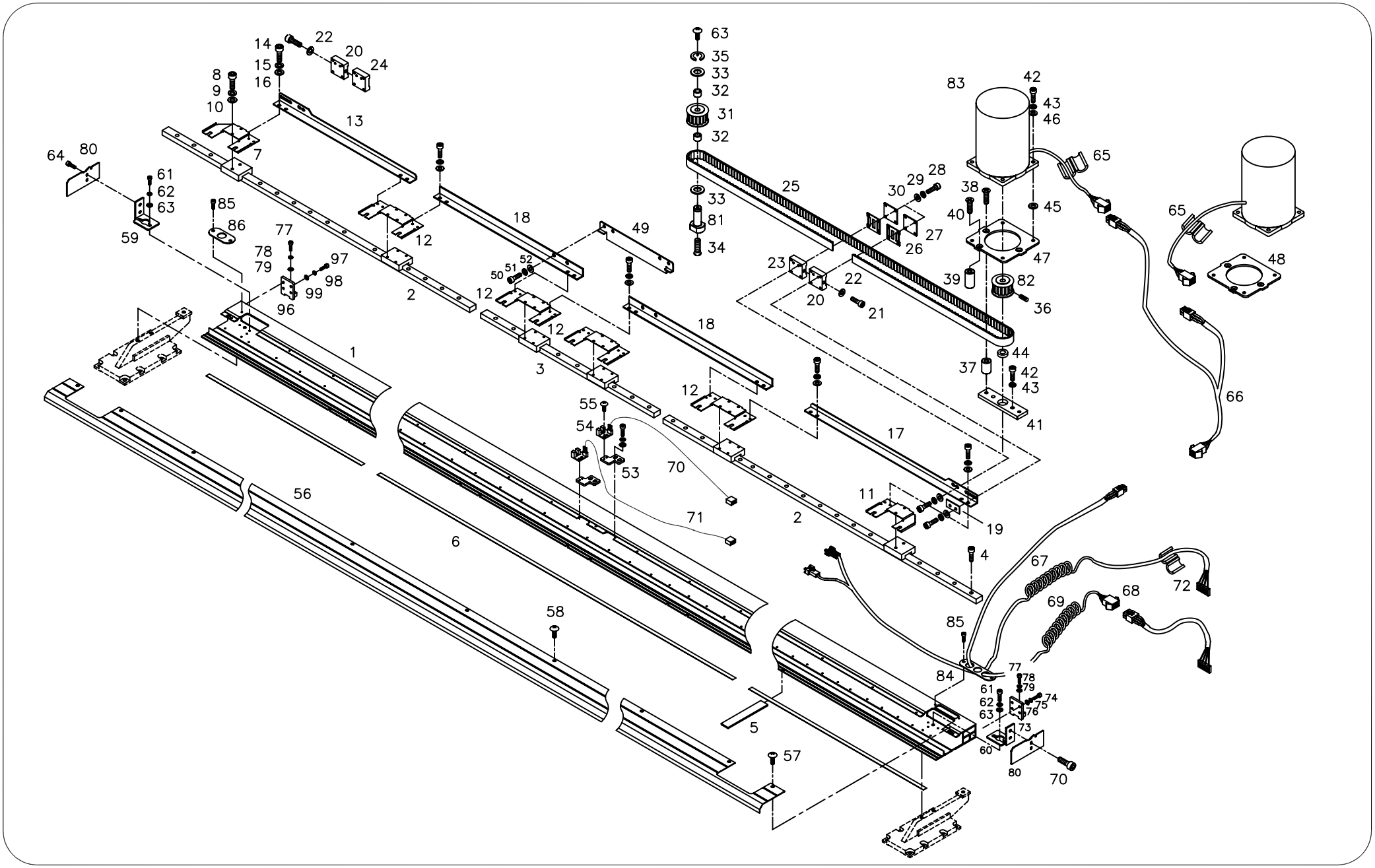

Ref.No	Part No.	Part Names	Q'ty
M5081	03106000U000	Timing Pulley Driving Pin	2
M5082	03201800UH80	Timing Pulley "B"	2
M5083	03202100UH80	X MOTOR (103H8223-5043)	2
M5084	14014PR-UK01	BUSHING PLATE	1
M5085	02023SC-7113	HEX.SOCKET BOLT (M4*L8)	4
M5086	15082PR-W121	FIXING PLATE FOR BUSHING	1

Ref. No	Part No.	Part Names	Q'ty

N1 Y-Axis Drive Set (UK1202)

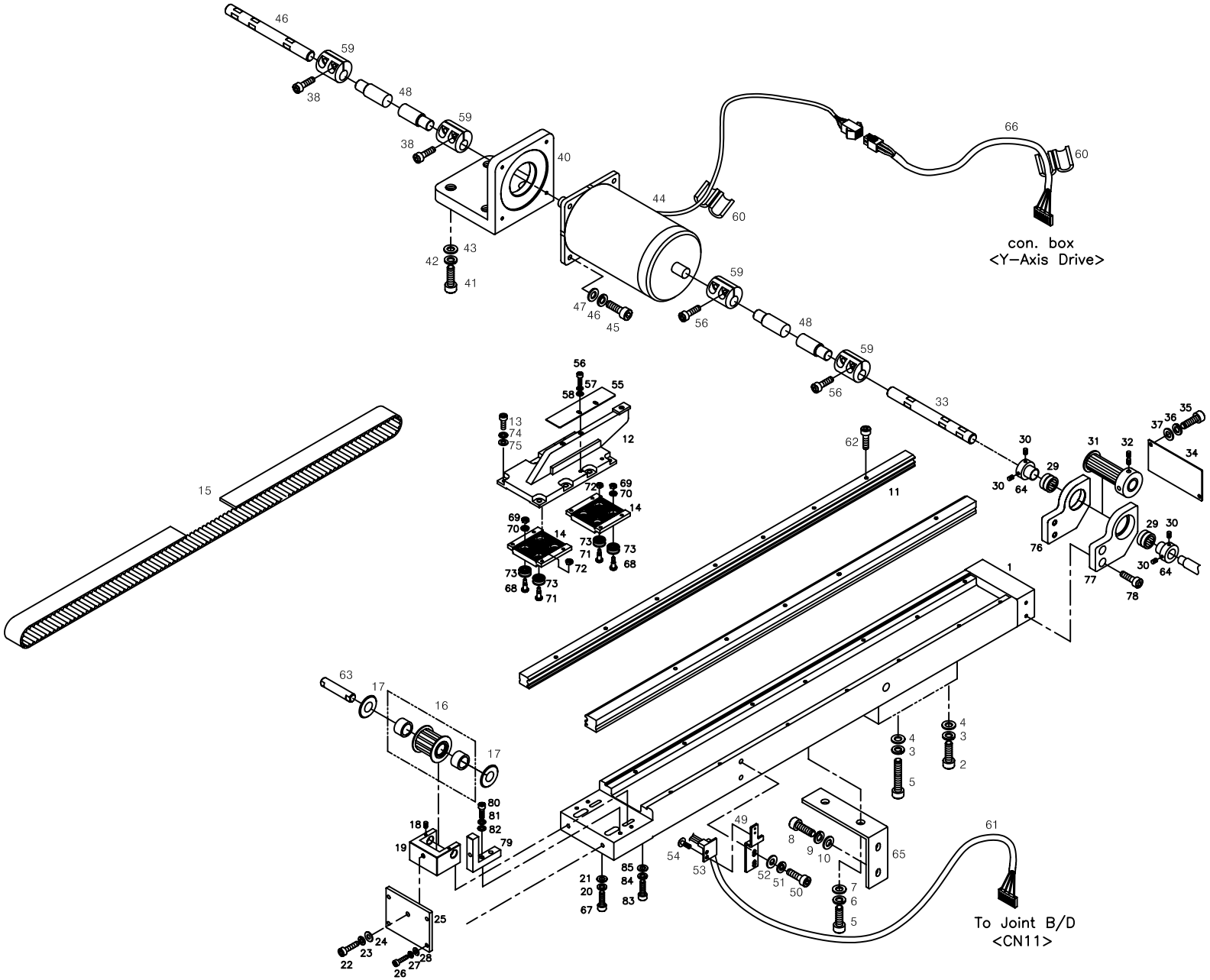

Ref.No	Part No.	Part Names	Q'ty
N1001	GP-004930-01	X-Cam Roller Guide Rail Frame	1
N1002	15017SC-4113	Hex. Socket Bolt (M8*L45)	4
N1003	04029SW-A001	Stud Bolt Washer(S) (@8)	8
N1004	15020SC-4113	Hex,Socket Bolt (M8*L50)	4
N1005	14002SC-7113	Hex.Socket Bolt (M6*L15)	4
N1006	16014SW-4115	Spring Washer (@6)	4
N1007	08057SW-1111	Washer (@6)	4
N1008	03016SC-4113	Hex. Socket Bolt (M5*L15)	8
N1009	18048SW-3115	Spring Washer (@5)	8
N1010	16018SW-1111	Washer (@5)	8
N1011	03100100UH01	Cam Roller Guide Rail (L=590)	2
N1012	14014SC-7113	Hex.Socket Set Screw(M5*L8)	4
N1013	GP-005021-00	X-Y Connecting Bracket	1
N1014	02015SC-7113	Hex. Socket Bolt (M4*L20)	16
N1015	16104CL-H001	Timing Belt Fixing Plate (Y)	2
N1016	16019BT-UK01	Y-Drive Timing Belt (25*AT5*L1314)	2
N1017	12018BR-T121	Neddle Bearing Hk1010(Ina)	4
	15001PU-UK01	Timing Pulley "A"	2
N1018	12019BR-T121	Fiber Washer R-Tw1020	4
N1019	08007SC-4517	Hex. Socket Set Screw (M3*L5)	4
N1020	03100500UH00	Y-Tension Adjusting Bracket	2
N1021	16014SW-4115	Spring Washer (@6)	4
N1022	08057SW-1111	Washer (@6)	4
N1023	16028SC-7113	Hex. Socket Bolt (M5*L25)	2
N1024	18048SW-3115	Spring Washer (@5)	2
N1025	16018SW-1111	Washer (@5)	2
N1026	03100600UH00	Tension Adjust Plate	2
N1027	07016SC-7113	Hex.Socket Bolt (M4*L12)	6
N1028	02028SW-9115	Spring Washer (@4)	6
N1029	05009SW-1111	Washer (@4-L)	6
N1030	13026BR-T121	Needle Bearing (6002Z)	4
N1031	04012AF-A001	Hook Shaft Bush Screw	8
N1032	04001000U000	Timming Pulley	2
N1033	04014SC-4517	Hex.Socket Set Screw(M5*L5)	8
N1034	15049SH-UK01	Y-Shaft "A"	2
N1035	03101100UH00	Y-Bearing Bracket Cover	2
N1036	07035SC-7113	Hex. Socket Bolt (M3*L6)	4
N1037	11019SW-9115	Spring Washer (@3)	4
N1038	06011SW-2111	Washer (@3)	4
N1039	03016SC-4113	Hex. Socket Bolt (M5*L15)	8

Ref. No	Part No.	Part Names	Q'ty
N1040	15057CS-UK01	Motor Bracket (Y)	2
N1041	03002SC-4113	Hex. Socket Bolt (M8*L32)	8
N1042	15095SW-3115	Spring Washer (@8)	8
N1043	08041SW-1111	Washer (@8-S)	8
N1044	16055MT-UK06	Pulse Motor	1
N1045	08062SC-7113	Hex. Socket Bolt (M5*L20)	8
N1046	18048SW-3115	Spring Washer (@5)	8
N1047	16018SW-1111	Washer (@5)	8
N1048	GP-008141-00	Y-Driving Shaft L604	2
N1049	03101300UH00	Sensor Bracket	1
N1050	02015SC-7113	Hex.Socket Bolt(M4*L10)	1
N1051	02028SW-9115	Spring Washer (@4)	2
N1052	05009SW-1111	Washer (@4-L)	2
N1053	16062EL-UK01	Y Positioning Sensor	1
N1054	08006SC-8118	Plus Screw (M3*L5)	2
N1055	03101400UH00	Plate for Y-Sensing	1
N1056	22006SC-7113	Hex. Socket Bolt (M3*L8)	2
N1057	11019SW-9115	Spring Washer (3@)	2
N1058	08011SW-1111	Spring Washer (@3-S)	2
N1059	03005100U000	Coupling "A"	4
N1060	15045EL-UK01	Bid (L)	2
N1061	25054EL-UK01	Cable (25-54)	1
N1062	03071SC-A001	Hex.Scoket Bolt (M3*L15)	30
N1063	03004200U000	Timing Pulley Pin (Y)	2
N1064	03002700T000	Bearing Collar	4
N1065	16074PR-UK06	Y-Lm Support Fixing Plate	2
N1066	02101700U020	Cable (Sh-17-1)	1
N1067	08062SC-7113	HEX. SOCKET BOLT (M5*L20)	4
N1068	15002CW-B001	Cam Roller Stud (A)	4
N1069	150029SN-3211	Hex. Nut (M4-No2)	4
N1070	02028SW-9115	Spring Washer (@4)	4
N1071	15003CW-B001	Cam Roller Stud (B)	4
N1072	12010SN-1211	Hex.Nut (M5)	4
N1073	15001BR-B001	Cam Roller Bearing	8
N1074	18014SW-3115	Spring Washer (@4)	8
N1075	18015SW-3111	Washer (@4)	8
N1076	03100900UH00	Y-Bearing Bracket (L)	1
N1077	03101000UH00	Y-Bearing Bracket (R)	1
N1078	16059SC-7113	Hex. Socket Bolt (M6*L12)	4
N1079	03100700UH00	Fixed Block	2

N1 Y-Axis Drive Set (UK1202)

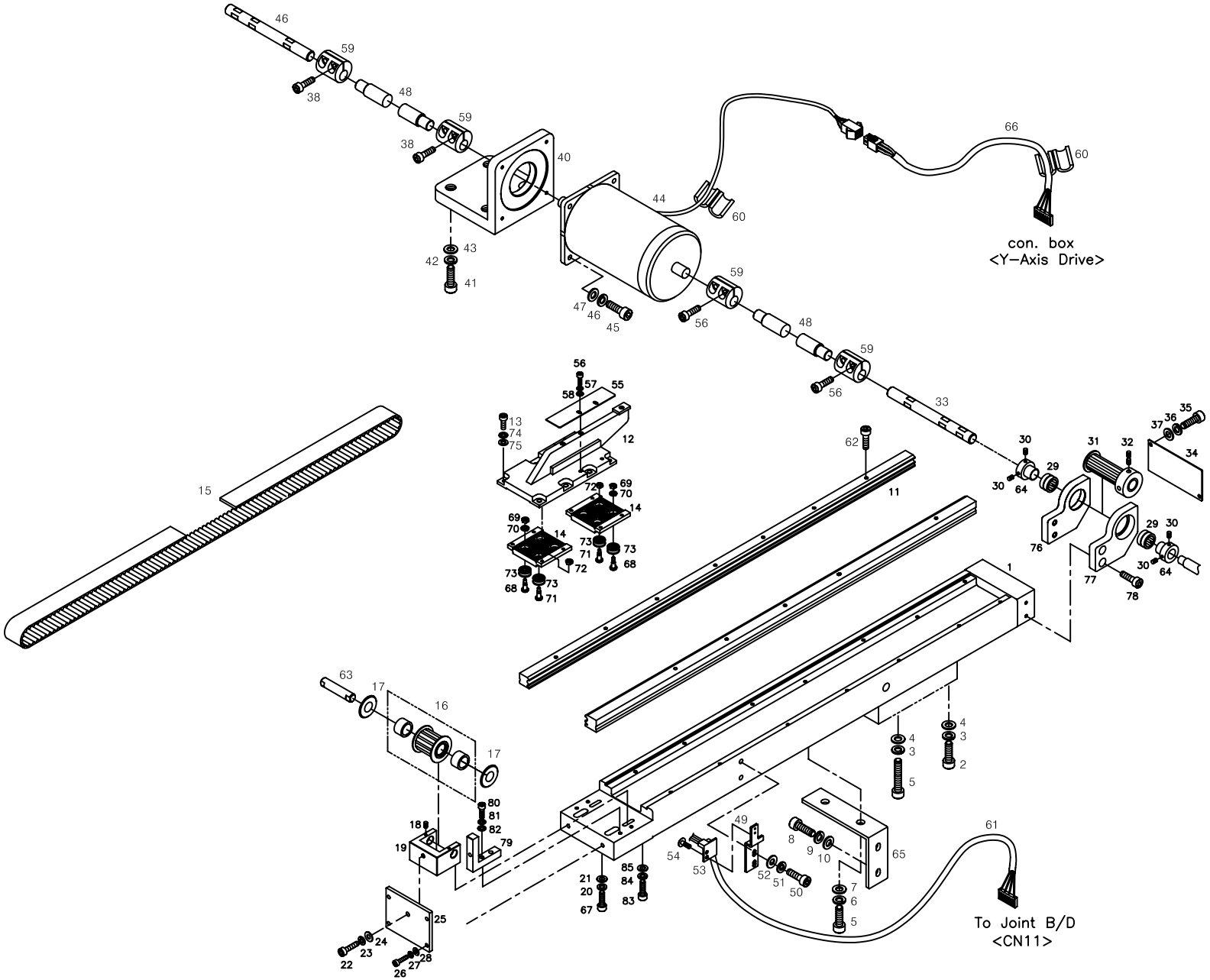

Ref.No	Part No.	Part Names	Q'ty
N1097	16059SC-7113	Hex. Socket Bolt (M6*L12)	4
N1098	03100700UH00	Fixed Block	2
N1099	11029SC-4113	Hex. Socket Bolt (M4*L20)	4
N1100	18014SW-3115	Spring Washer (@4)	4
N1101	18015SW-3111	Washer (@4)	4
N1102	11029SC-4113	Hex. Socket Bolt (M4*L20)	2
N1103	18014SW-3115	Spring Washer (@4)	2
N1104	18015SW-3111	Washer (@4)	2

Ref. No	Part No.	Part Names	Q'ty

N2 Y-Axis Drive Set (UK1204)

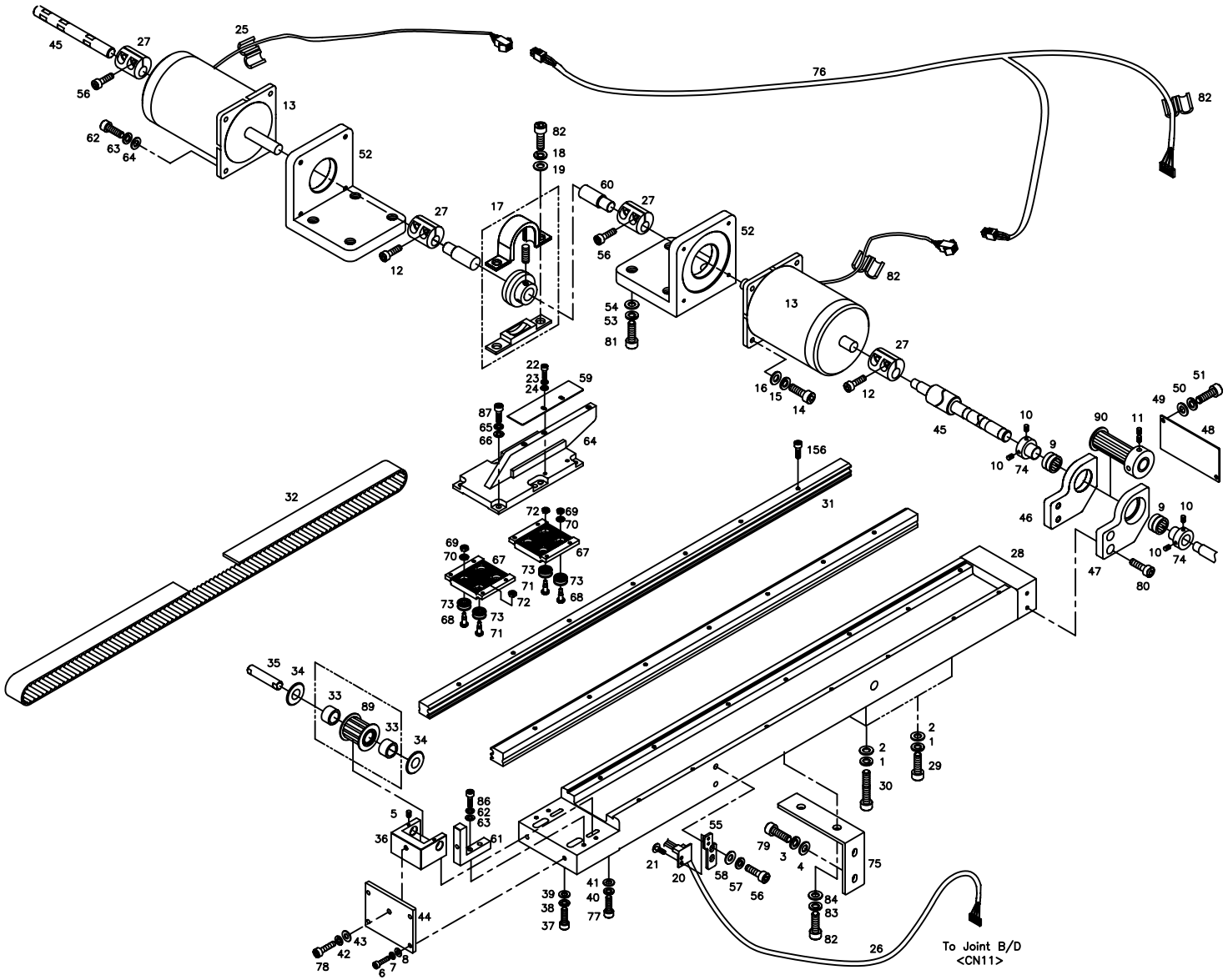

Ref.No	Part No.	Part Names	Q'ty
N2001	15095SW-3115	Spring Washer (@8)	8
N2002	04029SW-A001	Stud Bolt Washer(S) (@8)	8
N2003	18048SW-3115	Spring Washer (@5)	4
N2004	16018SW-1111	Washer (@5)	4
N2005	08007SC-4517	Hex. Socket Set Screw (M3*L5)	4
N2006	07016SC-7113	Hex.Socket Bolt (M4*L12)	6
N2007	02028SW-9115	Spring Washer (@4)	6
N2008	05009SW-1111	Washer (@4-L)	6
N2009	13026BR-T121	Needle Bearing (6002Z)	4
N2010	04012AF-A001	Hook Shaft Bush Screw	8
N2011	04014SC-4517	Hex.Socket Set Screw(M5*L5)	8
N2012	03016SC-4113	Hex. Socket Bolt (M5*L15)	8
N2013	16055AF-UK01	Y Motor (103H8222-5013)	2
N2014	08062SC-7113	Hex. Socket Bolt (M5*L20)	8
N2015	18048SW-3115	Spring Washer (@5)	8
N2016	16018SW-1111	Washer (@5)	8
N2017	16078BR-UK01	Pillow Block Set	1
N2018	16014SW-4115	Spring Washer (@6)	2
N2019	08057SW-1111	Washer (@6)	2
N2020	09018EL-UK01	Y-Positioning Sensor	1
N2021	08006SC-8118	Plus Screw (M3*L5)	2
N2022	22006SC-7113	Hex. Socket Bolt (M3*L8)	2
N2023	11019SW-9115	Spring Washer (3@)	2
N2024	08011SW-1111	Spring Washer (@3-S)	2
N2025	15045EL-UK01	Bid (L)	3
N2026	25045EL-UK01	Joint - Io B/D 40P	1
N2027	03005100U000	Coupling "A"	4
N2028	03100200UH01	Y-Lm Guide Frame (L650)	2
N2029	14027SC-4113	Hex.Socket Bolt (M8*L30)	4
N2030	03003SC-4113	Hex. Socket Bolt "B"(M8*L35)	4
N2031	03100100UH01	Cam Roller Guide Rail (L590)	4
N2032	03100400UH01	Y-Driving Timing Belt (L1250)	2
N2033	15042BR-A001	Needle Bearing (1210Zz)	4
N2034	15046RB-A001	Driving Pin Washer (Tw1225)	4
N2035	16100CW-UK06	Timing Pulley Shaft (Y)	2
N2036	03100500UH00	Y-Tension Adjusting Bracket	2
N2037	08062SC-7113	Hex. Socket Bolt (M5*L20)	4
N2038	18048SW-3115	Spring Washer (5@)	4
N2039	18049SW-3111	Washer (@5)	4
N2040	18014SW-3115	Spring Washer (@4-No2)	2

Ref. No	Part No.	Part Names	Q'ty
N2041	18015SW-3111	Washer (4@)	2
N2042	18048SW-3115	Spring Washer (5@)	2
N2043	18049SW-3111	Washer (@5)	2
N2044	03100600UH00	Tension Adjusting Plate	2
N2045	03100800UH60	Y-Driving Shaft "A"	2
N2046	03100900UH00	Y-Bearing Bracket (L)	2
N2047	03101000UH00	Y-Bearing Bracket (R)	2
N2048	03101100UH00	Y-Bearing Bracket Cover	2
N2049	06011SW-2111	WASHER (@3)	4
N2050	11019SW-9115	Spring Washer (3@)	4
N2051	07035SC-7113	Bracket Screw (M3*L6)	4
N2052	16056CA-UK06	Y-Driving Motor Bracket	2
N2053	15095SW-3115	Spring Washer (@8)	8
N2054	04029SW-A001	Stud Bolt Washer(S) (@8)	8
N2055	03101300UH00	Sensor Bracket	1
N2056	02015SC-7113	Hex.Socket Bolt(M4*L10)	2
N2057	18014SW-3115	Spring Washer (@4-No2)	2
N2058	18015SW-3111	Washer (4@)	2
N2059	03101400UH00	Plate For Y-Sensing	1
N2060	03101200UK40	Y-Driving Shaft "B" (L=2095)	1
N2061	03100700UH00	Fixed Block	4
N2062	18014SW-3115	Spring Washer (@4-No2)	4
N2063	18015SW-3111	Washer (4@)	4
N2064	GP-005614-00	BRACKER FOR X-Y CONNECTING	2
N2065	18014SW-3115	Spring Washer (@4-No2)	16
N2066	18015SW-3111	Washer (4@)	16
N2067	16104CL-H001	Belt Catcher Plate (Y)	4
N2068	15002CW-B001	Cam Roller Stud (A)	8
N2069	15029SN-3211	Hex. Nut (M4-No2)	8
N2070	02028SW-9115	Spring Washer (@4)	8
N2071	15003CW-B001	Cam Roller Stud (B)	8
N2072	12010SN-1211	Hex.Nut (M5)	8
N2073	15001BR-B001	Cam Roller Bearing	16
N2074	03002700T000	Bearing Collar	4
N2075	16074PR-UK06	Y-Lm Support Fixing Plate	2
N2076	02101700U040	Cable (Sh-17-2)	1
N2077	11029SC-4113	HEX. SOCKET BOLT (M4*L20)	2
N2078	16028SC-7113	HEX. SOCKET BOLT (M5*L25)	2
N2079	08076SC-7113	HEX. SOCKET BOLT (M5*L12)	4
N2080	16059SC-7113	HEX.SOCKET BOLT (M6*L12)	8

N2 Y-Axis Drive Set (UK1204)

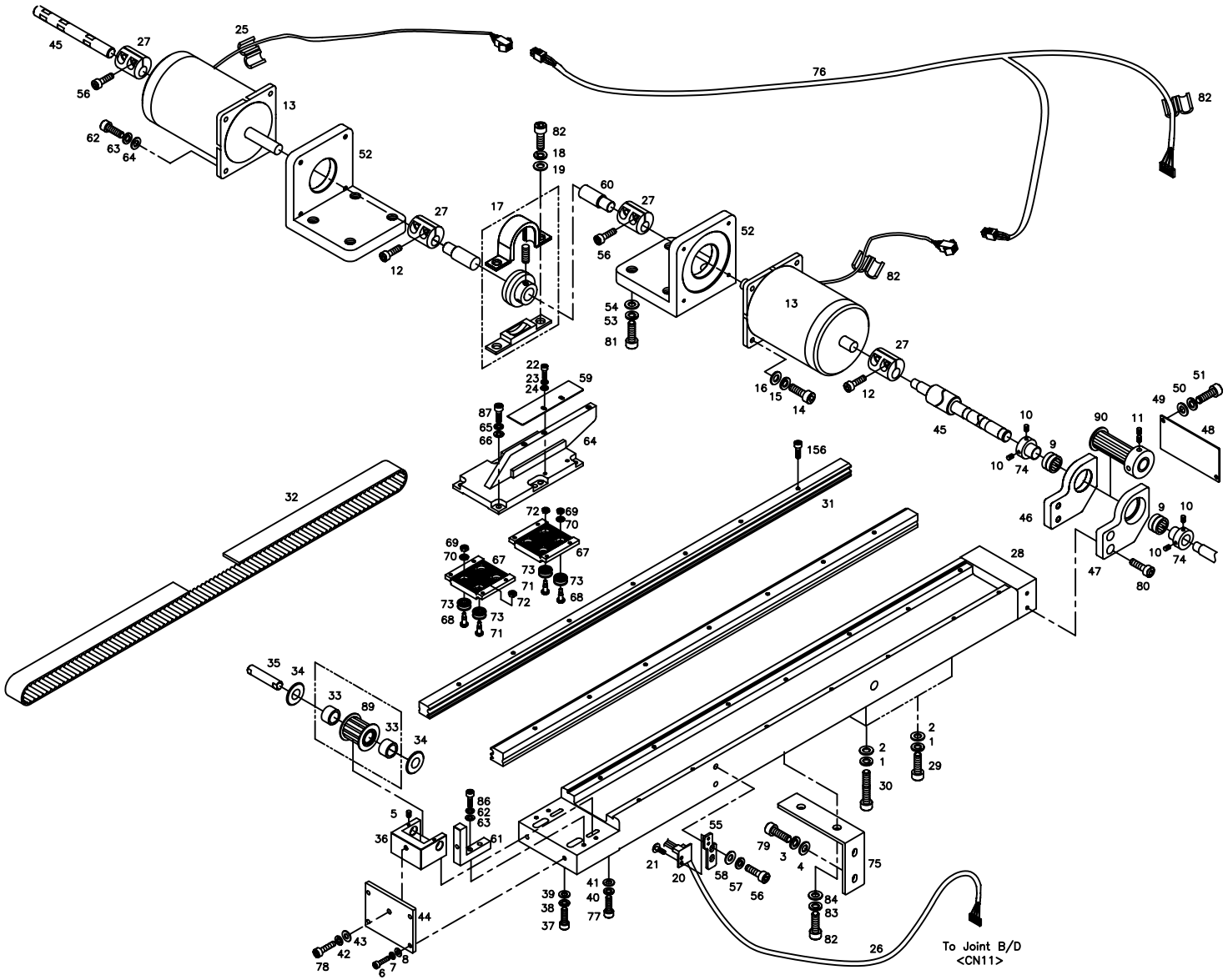

Ref.No	Part No.	Part Names	Q'ty
N2081	14027SC-4113	HEX.SOCKET BOLT (M8*L30)	8
N2082	14002SC-7113	HEX.SOCKET BOLT (M6*L15)	2
N2083	14006SC-7113	HEX.SOCKET SET SCREW(M8*L15)	4
N2084	15095SW-3115	SPRING WASHER (@8)	4
N2085	08041SW-1111	WASHER (@8-S)	4
N2086	11029SC-4113	HEX. SOCKET BOLT (M4*L20)	4
N2087	02015SC-7113	HEX.SOCKET BOLT(M4*L10)	16
N2088	04016MC-4113	CAM ROLLER GUIDE FIXED SCREW	28
N2089	04500100U000	TIMING PULLEY(16-S5M-32F)	2
N2090	04001000U000	TIMING PULLEY(16-S5M-32F)	2

Ref. No	Part No.	Part Names	Q'ty

N3

Y-Axis Drive Set (UK1206)

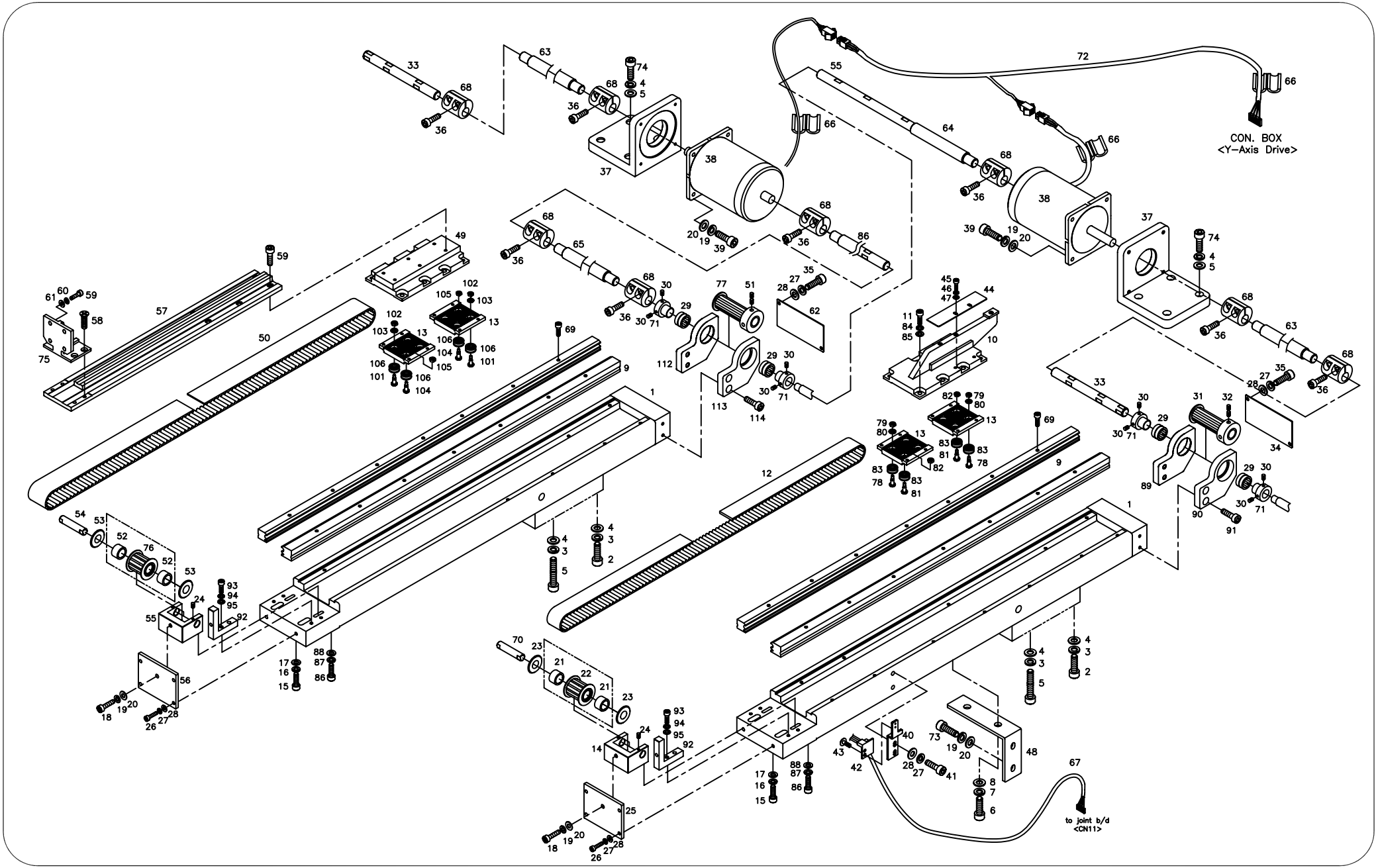

Ref.No	Part No.	Part Names	Q'ty
N3001	03100200UH81	Y-Lm Guide Support "A" (L)	1
N3002	15017SC-4113	Hex. Socket Bolt (M8*L45)	16
N3003	15095SW-3115	Spring Washer (@8)	44
N3004	04029SW-A001	Stud Bolt Washer(S) (@8)	60
N3005	15020SC-4113	Hex,Socket Bolt (M8*L50)	4
N3006	14002SC-7113	Hex.Socket Bolt (M6*L15)	4
N3007	16014SW-4115	Spring Washer (@6)	4
N3008	08057SW-1111	Washer (@6)	12
N3009	03100100UH01	Y-Lm Guide Ass'Y	2
N3010	GP-005021-00	X-Y Connecting Bracket	2
N3011	02015SC-7113	Hex.Socket Bolt(M4*L10)	16
N3012	16019BT-UK06	Y-Drive Timing Belt (25*AT5*1314)	2
N3013	16104CL-H001	Belt Catcher Plate(Y)	4
N3014	03100500UH00	Y-Tension Adjusting Bracket	2
N3015	08091SC-7113	Hex. Socket Bolt (M6*L20)	4
N3016	16014SW-4115	Spring Washer (@6)	4
N3017	08057SW-1111	Washer (@6)	4
N3018	16028SC-7113	Hex. Socket Bolt (M5*L25)	4
N3019	18048SW-3115	Spring Washer (@5)	52
N3020	16018SW-1111	Washer (@5)	52
N3021	12018BR-T121	Neddle Bearing Hk1010(Ina)	4
N3022	04500100U000	Timing Pulley "A"	2
N3023	12019BR-T121	Fiber Washer R-Tw1020	4
N3024	08007SC-4517	Hex. Socket Set Screw (M3*L5)	8
N3025	03100600UH00	Tension Adjusting Plate	2
N3026	07016SC-7113	Hex.Socket Bolt (M4*L12)	6
N3027	02028SW-9115	Spring Washer (@4)	22
N3028	05009SW-1111	Washer (@4-L)	22
N3029	13026BR-T121	Needle Bearing (6002Z)	8
N3030	04012AF-A001	Hook Shaft Bush Screw	16
N3031	04001000U000	Timing Pulley "B"	2
N3032	04014SC-4517	Hex.Socket Set Screw(M5*L5)	8
N3033	03100800UH60	Y-Driving Shaft "A" L=160	1
N3034	03101100UH00	Y-Bearing Bracket Cover	2
N3035	02023SC-7113	Hex. Socket Bolt (M4*L8)	8
N3036	03016SC-4113	Hex. Socket Bolt (M5*L15)	20
N3037	16056CA-UK06	Y-Driving Motor Bracket	2
N3038	16055MT-UK06	Pulse Motor	2
N3039	08062SC-7113	Hex. Socket Bolt (M5*L20)	12
N3040	03101300UH00	Sensor Bracket	1

Ref. No	Part No.	Part Names	Q'ty
N3041	02015SC-7113	Hex.Socket Bolt(M4*L10)	24
N3042	09018EL-UK01	Y-Positioning Sensor	1
N3043	08006SC-8118	Plus Screw (M3*L5)	2
N3044	03101400UH00	Sensing Plate (Y)	1
N3045	22006SC-7113	Hex. Socket Bolt (M3*L8)	2
N3046	11019SW-9115	Spring Washer (3@)	2
N3047	08011SW-1111	Spring Washer (@3-S)	2
N3048	16074PR-UK06	Y-Lm Support Fixing Plate	2
N3049	03100300UH80	Bracket For Y-Sensing	2
N3050	16093BT-UK06	Y-Drive Timing Belt "B"(L=1295)	2
N3051	14060AF-4517	Hex.Socket Screw(M6*L6)	8
N3052	15042BR-A001	Needle Bearing (1210Zz)	4
N3053	15046RB-A001	Driving Pin Washer (Tw1225)	4
N3054	16100CW-UK06	Timing Pulley Shaft (Y)	2
N3055	03100500UH00	Y-Tension Adjusting Bracket	2
N3056	03100900UH80	Tension Adjusting Plate (B)	2
N3057	03100400UH80	X-Drive Connecting Plate	2
N3058	02002SC-7119	Pluss Screw (M4*L8)	8
N3059	18013AF-7113	Hex. Socket Bolt (M4*L10)	20
N3060	18014SW-3115	Spring Washer (@4-No2)	8
N3061	18015SW-3111	Washer (4@)	8
N3062	16122PR-UK06	Y-Lm Guide Support Cover (B)	2
N3063	23008SH-UK06	Y Driving Shaft "B" L=689.5	2
N3064	23009SH-UK06	Y Driving Shaft "C" L=322	2
N3065	GP-008151-00	Y Driving Shaft "D" L=978	1
N3066	15045EL-UK01	Bid (L)	3
N3067	25054EL-UK01	Cable (25-54)	1
N3068	03005100U000	Coupling "A"	8
N3069	03071SC-A001	Hex.Scoket Bolt (M3*L15)	30
N3070	03004200U000	Timing Pulley Pin (Y)	2
N3071	03002700T000	Bearing Collar	8
N3072	02101700U060	Cable (Sh-17-3)	1
N3073	08076SC-7113	HEX. SOCKET BOLT (M5*L12)	4
N3074	14027SC-4113	HEX.SOCKET BOLT (M8*L30)	8
N3075	03101600UH80	X-FRAME HOLDER	2
N3076	04500100U000	TIMING PULLEY(16-S5M-32F)	1
N3077	04001000U000	TIMING PULLEY(16-S5M-32F)	1
N3078	15002CW-B001	Cam Roller Stud (A)	8
N3079	15029SN-3211	Hex. Nut (M4-No2)	8
N3080	02028SW-9115	Spring Washer (@4)	8

N3

Y-Axis Drive Set (UK1206)

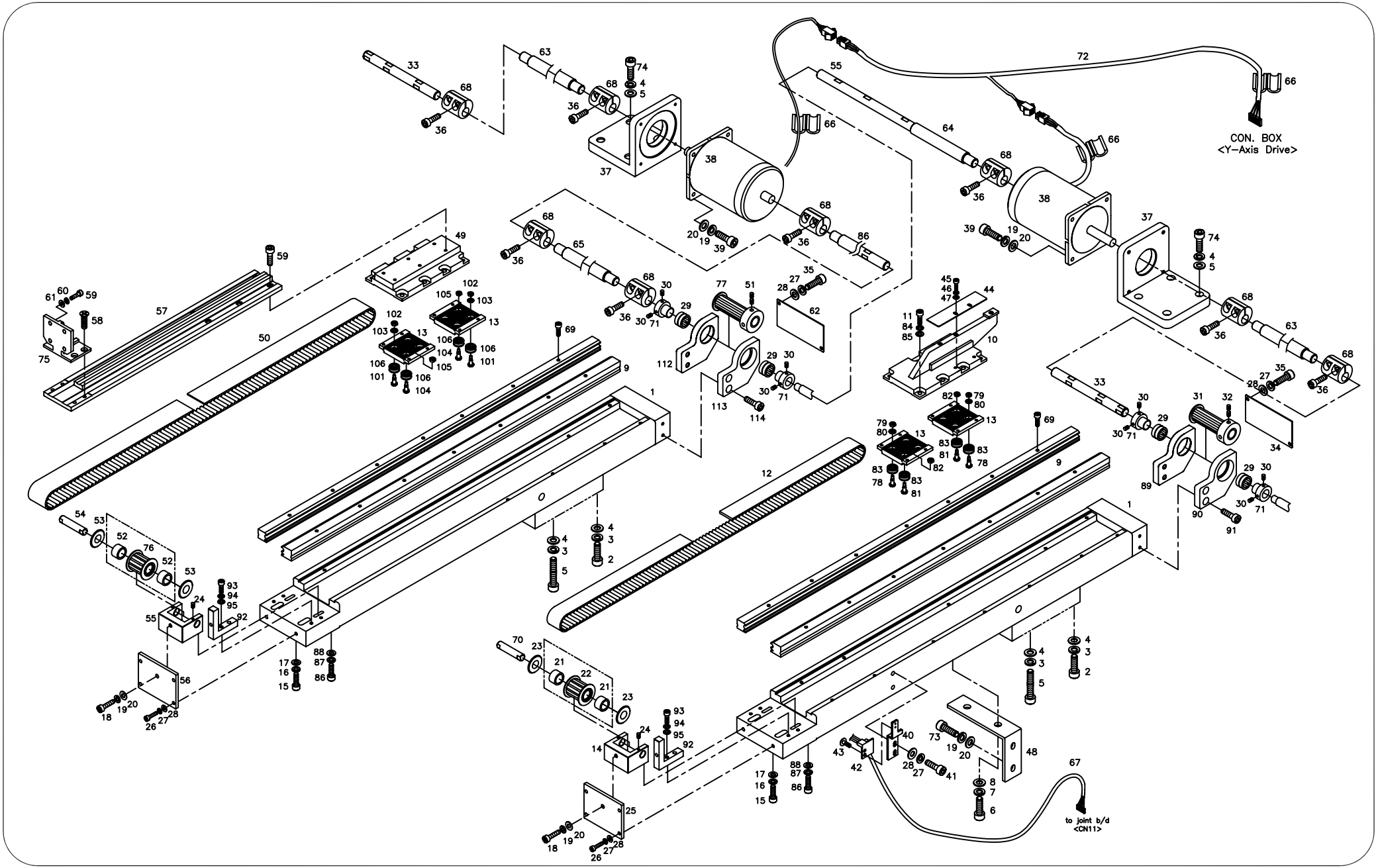

Ref.No	Part No.	Part Names	Q'ty
N3081	15003CW-B001	Cam Roller Stud (B)	8
N3082	12010SN-1211	Hex.Nut (M5)	8
N3083	15001BR-B001	Cam Roller Bearing	16
N3084	18014SW-3115	Spring Washer (@4)	16
N3085	18015SW-3111	Washer (@4)	16
N3086	11029SC-4113	Hex. Socket Bolt (M4*L20)	4
N3087	18014SW-3115	Spring Washer (@4)	4
N3088	18015SW-3111	Washer (@4)	4
N3089	03100900UH00	Y-Bearing Bracket(L)	2
N3090	03101000UH00	Y-Bearing Bracket(R)	2
N3091	16059SC-7113	Hex. Socket Bolt (M6*L12)	8
N3092	03100700UH90	Plate for Y-Sensor	4
N3093	11029SC-4113	Hex. Socket Bolt (M4*L20)	8
N3094	18014SW-3115	Spring Washer (@4)	8
N3095	18015SW-3111	Washer (@4)	8

Ref. No	Part No.	Part Names	Q'ty

N4 Y-Axis Drive System (UH1506C)

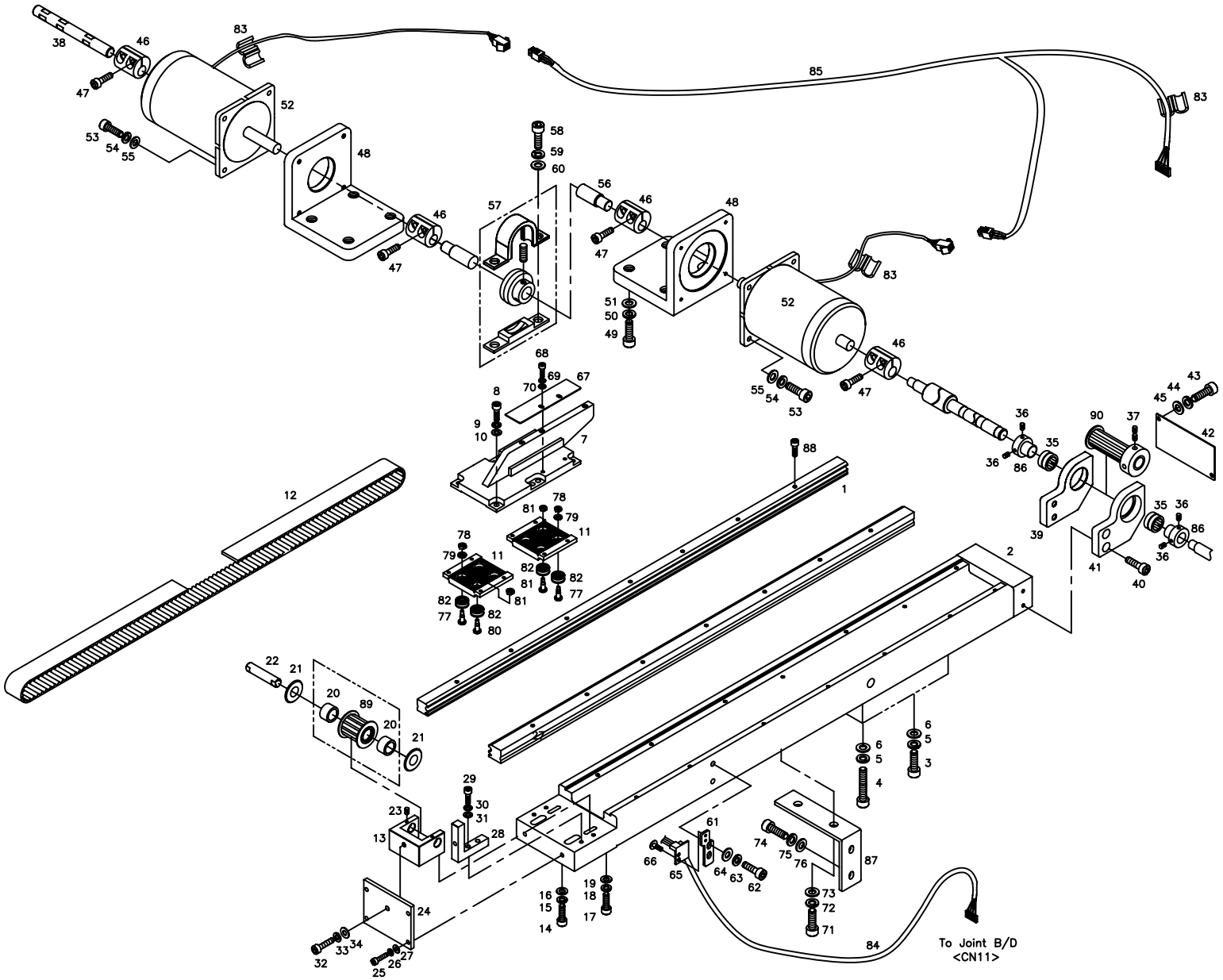

Ref.No	Part No.	Part Names	Q'ty
N4001	03100100UH01	Cam Roller Guide Rail (L590)	4
N4002	03100200UH01	Y-Lm Guide Frame (L650)	2
N4003	14027SC-4113	Hex.Socket Bolt (M8*L30)	4
N4004	03003SC-4113	Hex. Socket Bolt "B"(M8*L35)	4
N4005	15095SW-3115	Spring Washer (@8)	8
N4006	04029SW-A001	Stud Bolt Washer(S) (@8)	8
N4007	GP-005614-00	BRACKER FOR X-Y CONNECTING	2
N4008	07016SC-7113	Hex.Socket Bolt (M4*L12)	16
N4009	18014SW-3115	Spring Washer (@4-No2)	16
N4010	18015SW-3111	Washer (4@)	16
N4011	16104CL-H001	Belt Catcher Plate (Y)	4
N4012	03100400UH01	Y-Driving Timing Belt (L1250)	2
N4013	03100500UH00	Y-Tension Adjusting Bracket	2
N4014	08062SC-7113	Hex. Socket Bolt (M5*L20)	4
N4015	18048SW-3115	Spring Washer (5@)	4
N4016	18049SW-3111	Washer (@5)	4
N4017	05008SC-4113	Hex.Socket Bolt (M4*L16)	2
N4018	18014SW-3115	Spring Washer (@4-No2)	2
N4019	18015SW-3111	Washer (4@)	2
N4020	15042BR-A001	Needle Bearing (1210Zz)	4
N4021	15046RB-A001	Driving Pin Washer (Tw1225)	4
N4022	16100CW-UK06	Timing Pulley Shaft (Y)	2
N4023	08007SC-4517	Hex. Socket Set Screw (M3*L5)	4
N4024	03100600UH00	Tension Adjusting Plate	2
N4025	07016SC-7113	Hex.Socket Bolt (M4*L12)	8
N4026	02028SW-9115	Spring Washer (@4)	8
N4027	05009SW-1111	Washer (@4-L)	8
N4028	03100700UH00	Fixed Block	4
N4029	07016SC-7113	Hex.Socket Bolt (M4*L12)	4
N4030	18014SW-3115	Spring Washer (@4-No2)	4
N4031	18015SW-3111	Washer (4@)	4
N4032	15030SC-7113	Hex. Socket Bolt (M5*L30)	2
N4033	18048SW-3115	Spring Washer (5@)	2
N4034	18049SW-3111	Washer (@5)	2
N4035	13026BR-T121	Needle Bearing (6002Z)	4
N4036	04012AF-A001	Hook Shaft Bush Screw	8
N4037	04014SC-4517	Hex.Socket Set Screw(M5*L5)	8
N4038	03100800UH60	Y-Driving Shaft "A"	2
N4039	03100900UH00	Y-Bearing Bracket (L)	2
N4040	08091SC-7113	Hex. Socket Bolt (M6*L20)	8

Ref. No	Part No.	Part Names	Q'ty
N4041	03101000UH00	Y-Bearing Bracket (R)	2
N4042	03101100UH00	Y-Bearing Bracket Cover	2
N4043	07035SC-7113	Bracket Screw (M3*L6)	4
N4044	11019SW-9115	Spring Washer (3@)	4
N4045	08011SW-1111	Spring Washer (@3-S)	4
N4046	03005100U000	Coupling "A"	4
N4047	03016SC-4113	Hex. Socket Bolt (M5*L15)	8
N4048	16056CA-UK06	Y-Driving Motor Bracket	2
N4049	08087SC-7113	Hex. Socket Bolt (M8*L25)	8
N4050	15095SW-3115	Spring Washer (@8)	8
N4051	04029SW-A001	Stud Bolt Washer(S) (@8)	8
N4052	16055MT-UK06	Pulse Motor	2
N4053	08062SC-7113	Hex. Socket Bolt (M5*L20)	8
N4054	18048SW-3115	Spring Washer (@5)	8
N4055	16018SW-1111	Washer (@5)	8
N4056	03101200UH00	Y-Driving Shaft "B" (L=2325)	1
N4057	16078BR-UK01	Pillow Block Set	1
N4058	08091SC-7113	Hex. Socket Bolt (M6*L20)	2
N4059	16014SW-4115	Spring Washer (@6)	2
N4060	08057SW-1111	Washer (@6)	2
N4061	03101300UH00	Sensor Bracket	1
N4062	02015SC-7113	Hex.Socket Bolt(M4*L10)	2
N4063	18014SW-3115	Spring Washer (@4-No2)	2
N4064	18015SW-3111	Washer (4@)	2
N4065	10-003A-SC53	Positioning Sensor	1
N4066	08006SC-8118	Plus Screw (M3*L5)	2
N4067	03101400UH00	Plate For Y-Sensing	1
N4068	22006SC-7113	Hex. Socket Bolt (M3*L8)	2
N4069	11019SW-9115	Spring Washer (3@)	2
N4070	08011SW-1111	Spring Washer (@3-S)	2
N4071	14002SC-7113	Hex.Socket Bolt (M6*L15)	4
N4072	16014SW-4115	Spring Washer (@6)	4
N4073	08057SW-1111	Washer (@6)	4
N4074	03016SC-4113	Hex. Socket Bolt (M5*L15)	4
N4075	18048SW-3115	Spring Washer (@5)	4
N4076	16018SW-1111	Washer (@5)	4
N4077	15002CW-B001	Cam Roller Stud (A)	8
N4078	15029SN-3211	Hex. Nut (M4-No2)	8
N4079	02028SW-9115	Spring Washer (@4)	8
N4080	15003CW-B001	Cam Roller Stud (B)	8

N4 Y-Axis Drive System (UH1506C)

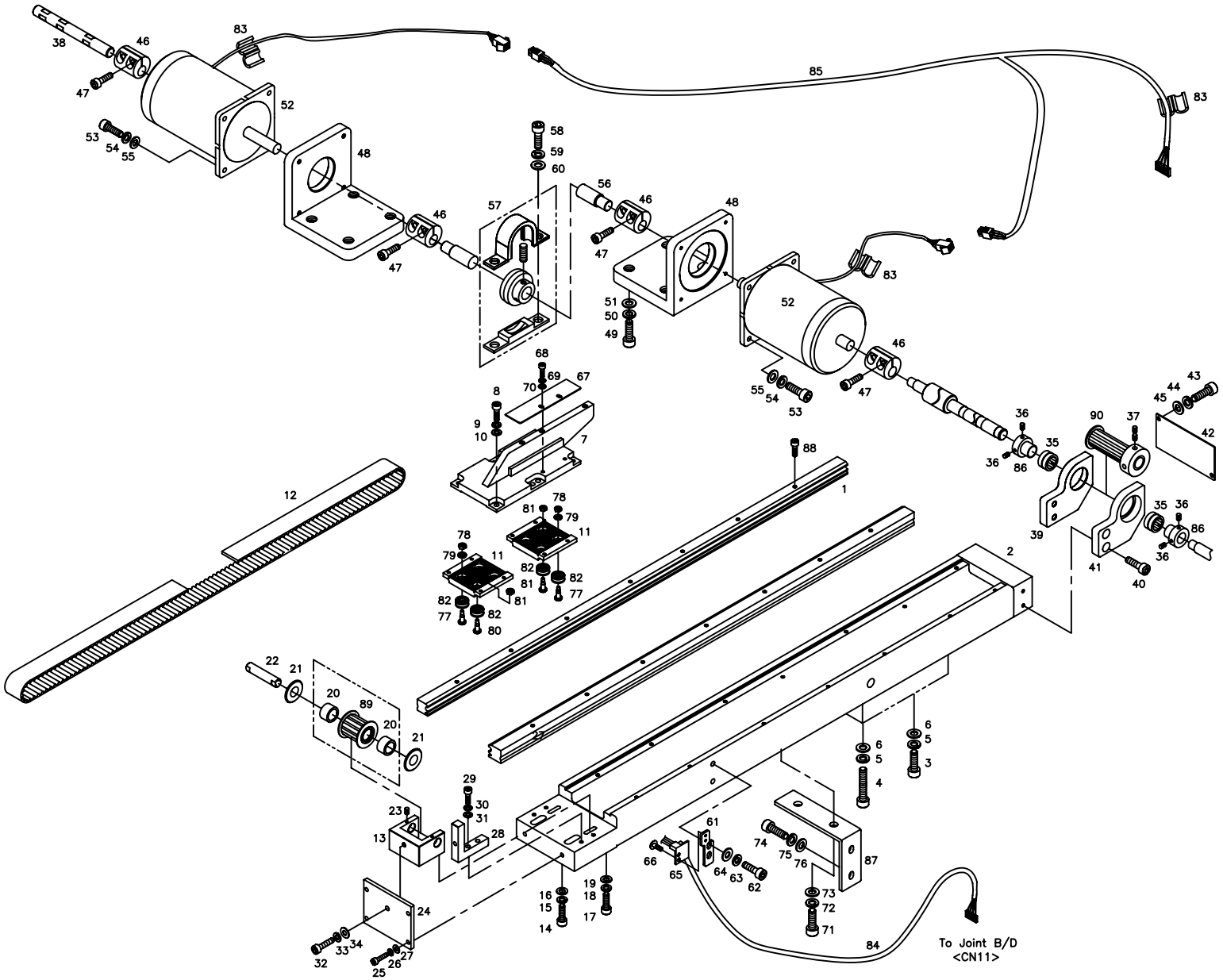

Ref.No	Part No.	Part Names	Q'ty
N4081	12010SN-1211	Hex.Nut (M5)	8
N4082	15001BR-B001	Cam Roller Bearing	16
N4083	15045EL-UK01	Bid (L)	3
N4084	25054EL-UK01	Cable (25-54)	1
N4085	02101200UH60	Cable (25-12)	1
N4086	03002700T000	Bearing Collar	4
N4087	16074PR-UK06	Y-Lm Support Fixing Plate	2
N4088	04016MC-4113	CAM ROLLER GUIDE FIXED SCREW	28
N4089	04500100U000	TIMING PULLEY(16-S5M-32F)	2
N4090	04001000U000	TIMING PULLEY(16-S5M-32F)	2

Ref. No	Part No.	Part Names	Q'ty

N5

Y-Axis Drive System (UH1508)

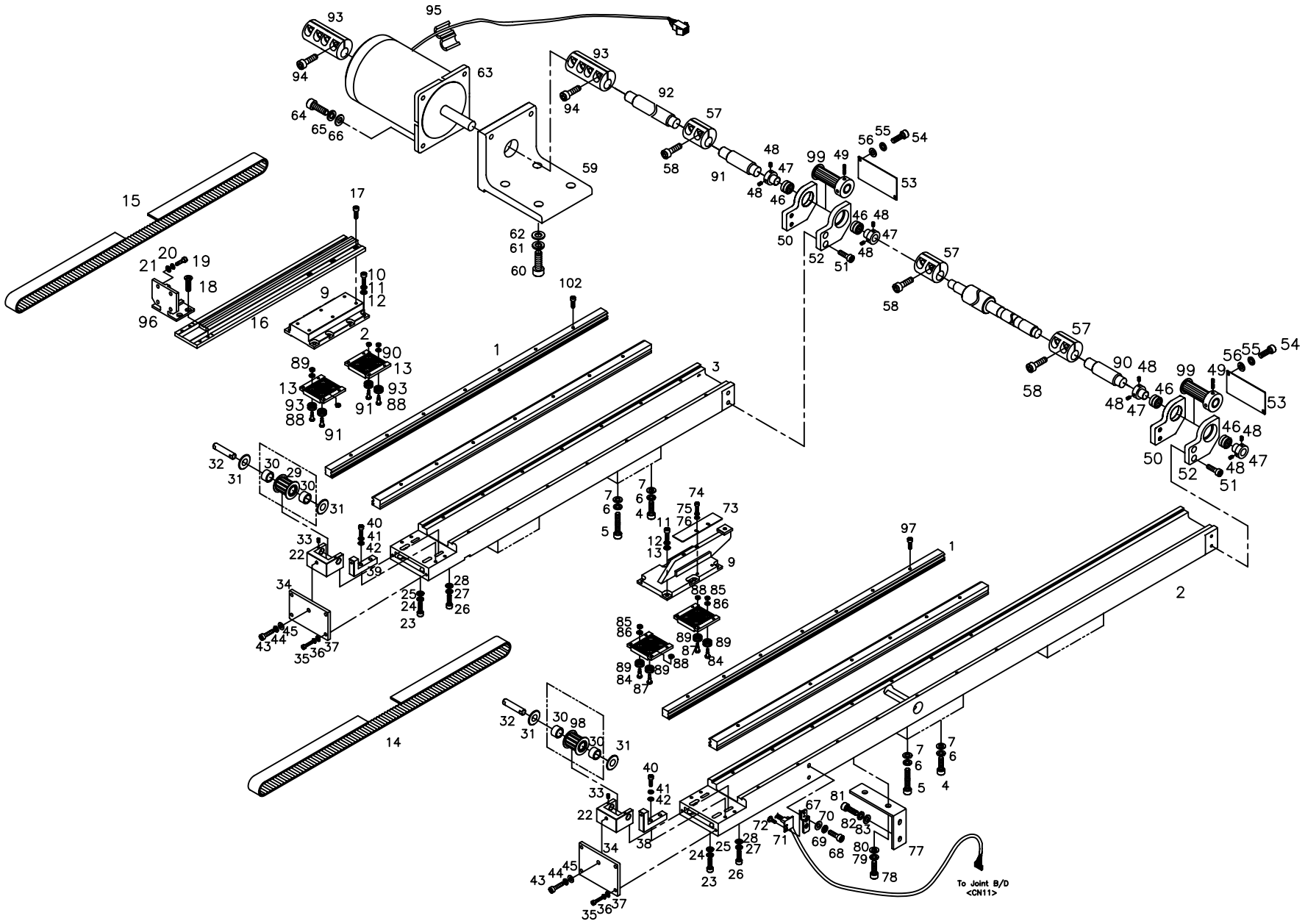

Ref.No	Part No.	Part Names	Q'ty
N5001	03100100UH01	Cam Roller Guide Rail (L590)	8
N5002	03100200UH81	Y-Lm Guide Frame A L1070	2
N5003	03100300UH81	Y-Lm Guide Frame A L658	2
N5004	02033SC-4113	Hex. Socket Bolt	16
N5005	03003SC-4113	Hex. Socket Bolt "B"(M8*L35)	12
N5006	15095SW-3115	Spring Washer (@8)	28
N5007	04029SW-A001	Stud Bolt Washer(S) (@8)	28
N5008	GP-005021-00	X-Y CONNECT BRACKET	2
N5009	03100300UH80	Y-Driving Braket	2
N5010	07016SC-7113	Hex.Socket Bolt (M4*L12)	32
N5011	18014SW-3115	Spring Washer (@4-No2)	32
N5012	05009SW-1111	Washer (@4-L)	32
N5013	16104CL-H001	Belt Catcher Plate (Y)	8
N5014	03100400UH81	Y-Driving Timing Belt A L2160	2
N5015	03100500UH81	Y-Driving Timing Belt B L1340	2
N5016	03100400UH80	X-Driving Connecting Plate	2
N5017	02015SC-7113	Hex.Socket Bolt(M4*L10)	6
N5018	02002SC-7119	Pluss Screw (M4*L8)	8
N5019	02015SC-7113	Hex.Socket Bolt(M4*L10)	8
N5020	18014SW-3115	Spring Washer (@4-No2)	8
N5021	18015SW-3111	Washer (4@)	8
N5022	03100500UH00	Y-Tension Adjusting Bracket	4
N5023	08062SC-7113	Hex. Socket Bolt (M5*L20)	8
N5024	18048SW-3115	Spring Washer (@5)	8
N5025	16018SW-1111	Washer (@5)	8
N5026	03016SC-4113	Hex. Socket Bolt (M5*L15)	4
N5027	18014SW-3115	Spring Washer (@4-No2)	4
N5028	18015SW-3111	Washer (4@)	4
N5029	12018BR-T121	Neddle Bearing Hk1010(Ina)	8
N5030	12019BR-T121	Fiber Washer R-Tw1020	8
N5031	16100CW-UK06	Timing Pulley Shaft (Y)	4
N5032	08007SC-4517	Hex. Socket Set Screw (M3*L5)	8
N5033	03100600UH00	Tension Adjusting Plate	4
N5034	03100900UH80	Fixed Block B	4
N5035	07016SC-7113	Hex.Socket Bolt (M4*L12)	16
N5036	18014SW-3115	Spring Washer (@4-No2)	16
N5037	18015SW-3111	Washer (4@)	16
N5038	03100700UH00	Fixed Block	4
N5039	03100800UH80	Fixed Block A	4
N5040	11029SC-4113	Hex. Socket Bolt (M4*L20)	8

Ref. No	Part No.	Part Names	Q'ty
N5041	18014SW-3115	Spring Washer (@4-No2)	8
N5042	18015SW-3111	Washer (4@)	8
N5043	15030SC-7113	Hex. Socket Bolt (M5*L30)	4
N5044	18048SW-3115	Spring Washer (@5)	4
N5045	16018SW-1111	Washer (@5)	4
N5046	13026BR-T121	Needle Bearing (6002Z)	4
N5047	03002700T000	Bearing Collar	8
N5048	03037AF-A001	Driver Screw	16
N5049	04014SC-4517	Hex.Socket Set Screw(M5*L5)	16
N5050	03100900UH00	Y-Bearing Bracket (L)	4
N5051	08091SC-7113	Hex. Socket Bolt (M6*L20)	16
N5052	03101000UH00	Y-Bearing Bracket (R)	4
N5053	03101100UH00	Y-Bearing Bracket Cover	4
N5054	07035SC-7113	Bracket Screw (M3*L6)	16
N5055	11019SW-9115	Spring Washer (3@)	16
N5056	08011SW-1111	Spring Washer (@3-S)	16
N5057	03005100U000	Coupling "A"	8
N5058	03016SC-4113	Hex. Socket Bolt (M5*L15)	16
N5059	03100500UH80	Y-Driving Motor Bracket	1
N5060	14027SC-4113	Hex.Socket Bolt (M8*L30)	4
N5061	15095SW-3115	Spring Washer (@8)	4
N5062	04029SW-A001	Stud Bolt Washer(S) (@8)	4
N5063	15047MT-UI12	Y Motor (103H89223-5214)	1
N5064	14046SC-7113	Hex.Socket Bolt (M6*L30)	4
N5065	16014SW-4115	Spring Washer (@6)	4
N5066	08057SW-1111	Washer (@6)	4
N5067	03101300UH00	Sensor Bracket	1
N5068	02015SC-7113	Hex.Socket Bolt(M4*L10)	2
N5069	02028SW-9115	Spring Washer (@4)	2
N5070	05009SW-1111	Washer (@4-L)	2
N5071	02107300UH80	Cable (Sh-73)	1
N5072	06010SC-8118	Plus Screw (M3*L4)	2
N5073	03101400UH00	Plate For Y-Sensing	1
N5074	22006SC-7113	Hex. Socket Bolt (M3*L8)	2
N5075	11019SW-9115	Spring Washer (3@)	2
N5076	08011SW-1111	Spring Washer (@3-S)	2
N5077	16074PR-UK06	Y-Lm Support Fixing Plate	2
N5078	14002SC-7113	Hex.Socket Bolt (M6*L15)	4
N5079	16014SW-4115	Spring Washer (@6)	4
N5080	08057SW-1111	Washer (@6)	4

N5

Y-Axis Drive System (UH1508)

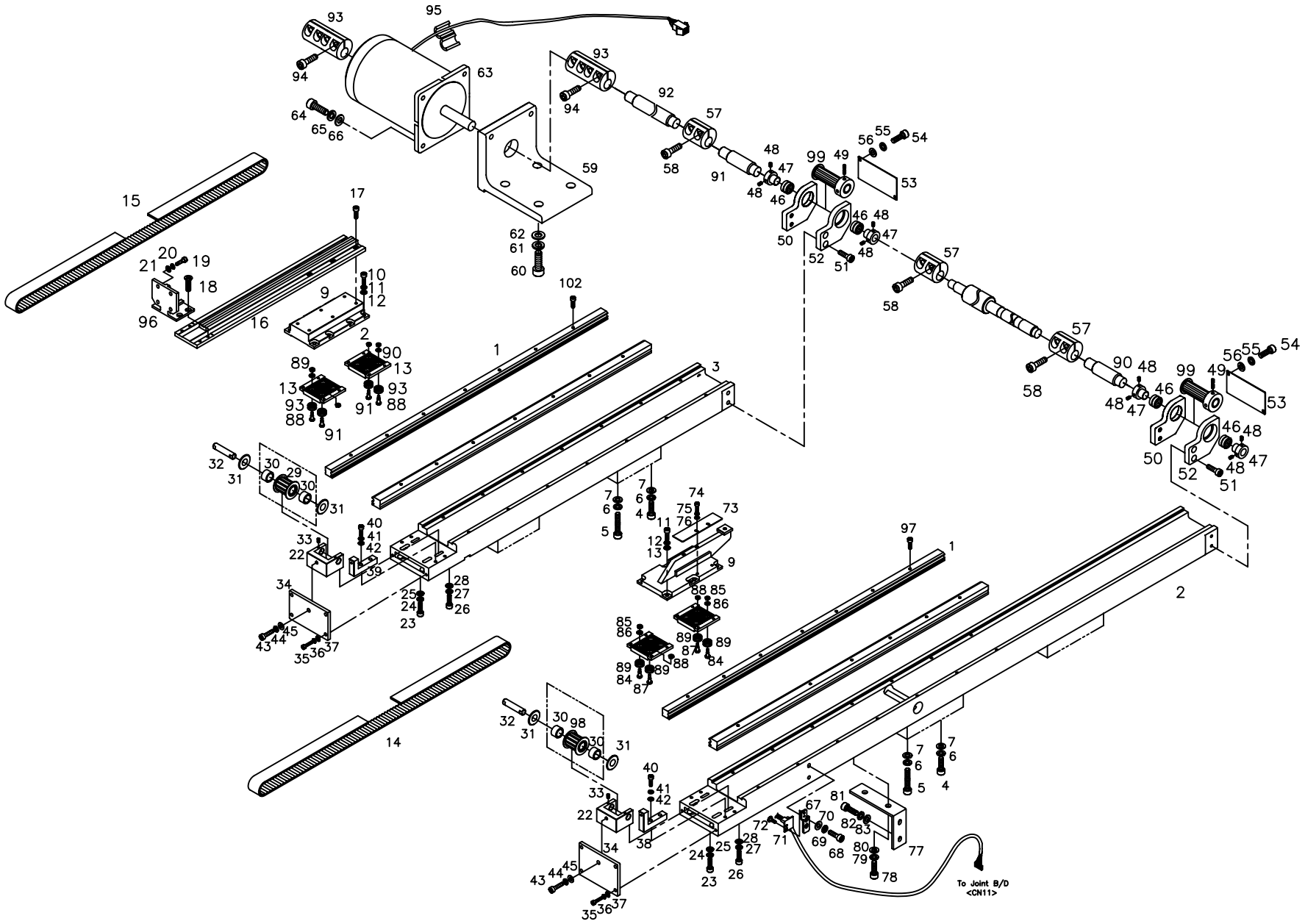

Ref.No	Part No.	Part Names	Q'ty
N5081	03016SC-4113	Hex. Socket Bolt (M5*L15)	4
N5082	18048SW-3115	Spring Washer (@5)	4
N5083	16018SW-1111	Washer (@5)	4
N5084	15002CW-B001	Cam Roller Stud (A)	16
N5085	15029SN-3211	Hex. Nut (M4-No2)	16
N5086	02028SW-9115	Spring Washer (@4)	16
N5087	15003CW-B001	Cam Roller Stud (B)	16
N5088	12010SN-1211	Hex.Nut (M5)	16
N5089	15001BR-B001	Cam Roller Baearing	32
N5090	03100800UH60	Y-Driving Shaft "A"	2
N5091	03101200UH80	Y-Driving Shaft "B" (L=191)	2
N5092	03103200UH80	Y-Driving Shaft "D" (L=217)	2
N5093	03003800B000	Coupling	2
N5094	08091SC-7113	Hex. Socket Bolt (M6*L20)	8
N5095	15045EL-UK01	Bid (L)	1
N5096	03101600UH80	X-Frame Holder	2
N5097	04016MC-4113	CAM ROLLER GUIDE FIXED SCREW	56
N5098	04500100U000	TIMING PULLEY(16-S5M-32F)	4
N5099	04001000U000	TIMING PULLEY(16-S5M-32F)	4

Ref. No	Part No.	Part Names	Q'ty

01 Tubular Frame (UK1202)

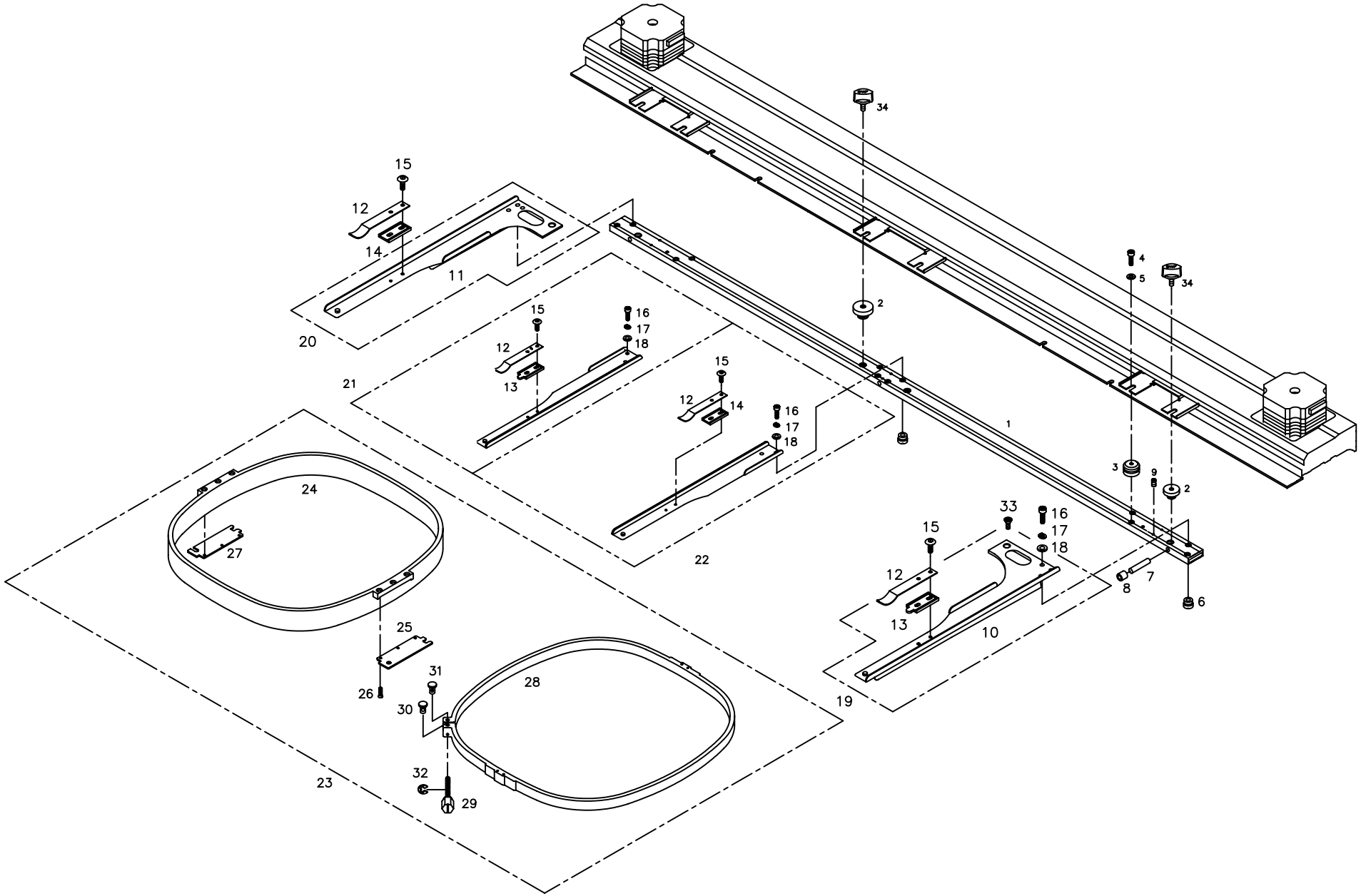

Ref.No	Part No.	Part Names	Q'ty
O1001	22001AD-UK02	Tubular Frame Uk1202-45	1
O1002	22002CW-UK01	Screw Bush "A"	4
O1003	22003CW-UK01	Location Block	2
O1004	11029SC-4113	Hex. Socket Bolt (M4*L20)	2
O1005	05009SW-1111	Washer (@4-L)	2
O1006	GP-010409-00	SCREW BUSH C	24
O1007	22007BR-UK01	Bearing Pin	3
O1008	22009BR-UK01	Needle Bearing (Taf51010)	3
O1009	03022SC-4517	Hex. Socket Set Screw(M4*L5)	6
O1010	09100100U000	Attachment (R)	1
O1011	09200100U000	Attachment (L)	1
O1012	22005PR-T121	Clip	4
O1013	22004PM-T121	Clip Bracket (R)	28
O1014	22003PM-T121	Clip Bracket (L)	2
O1015	09100200U000	Fixed Clip Bracket Screw	8
O1016	02015SC-7113	Hex.Socket Bolt(M4*L10)	2
O1017	18014SW-3115	Spring Washer (@4-No2)	8
O1018	18015SW-3111	Washer (4@)	8
O1019	09100000U000	Attachment (R)	1
O1020	09200000U000	Attachment (L)	1
O1021	09100410U000	Attachment (Set-L)	1
O1022	09100510U000	Attachment (Set-R)	1
O1023	22038BM-UK01	Tubular Set	4
O1024	22038PM-UK01	Tubular (Inner) 45*44	4
O1025	17014PR-UK01	Tubular Holder "A"	4
O1026	10011SC-8119	Plus Screw (M3*L6)	24
O1027	17015PR-UK01	Tubular Holder "B"	4
O1028	22043PM-UK01	Tubular (Outer) 45*44	4
O1029	22044CW-UK01	Adjusting Bolt	4
O1030	22045CW-UK01	Adjusting Bolt Guide	4
O1031	22046CW-UK01	Adjusting Nut	4
O1032	15159SR-4013	E-Ring (3@)	4
O1033	02002SC-7119	Pluss Screw (M4*L8)	2
O1034	09000100U000	Tubular Frame Fixing Screw	4

Ref. No	Part No.	Part Names	Q'ty

O2 Tubular Frame (UK1204)

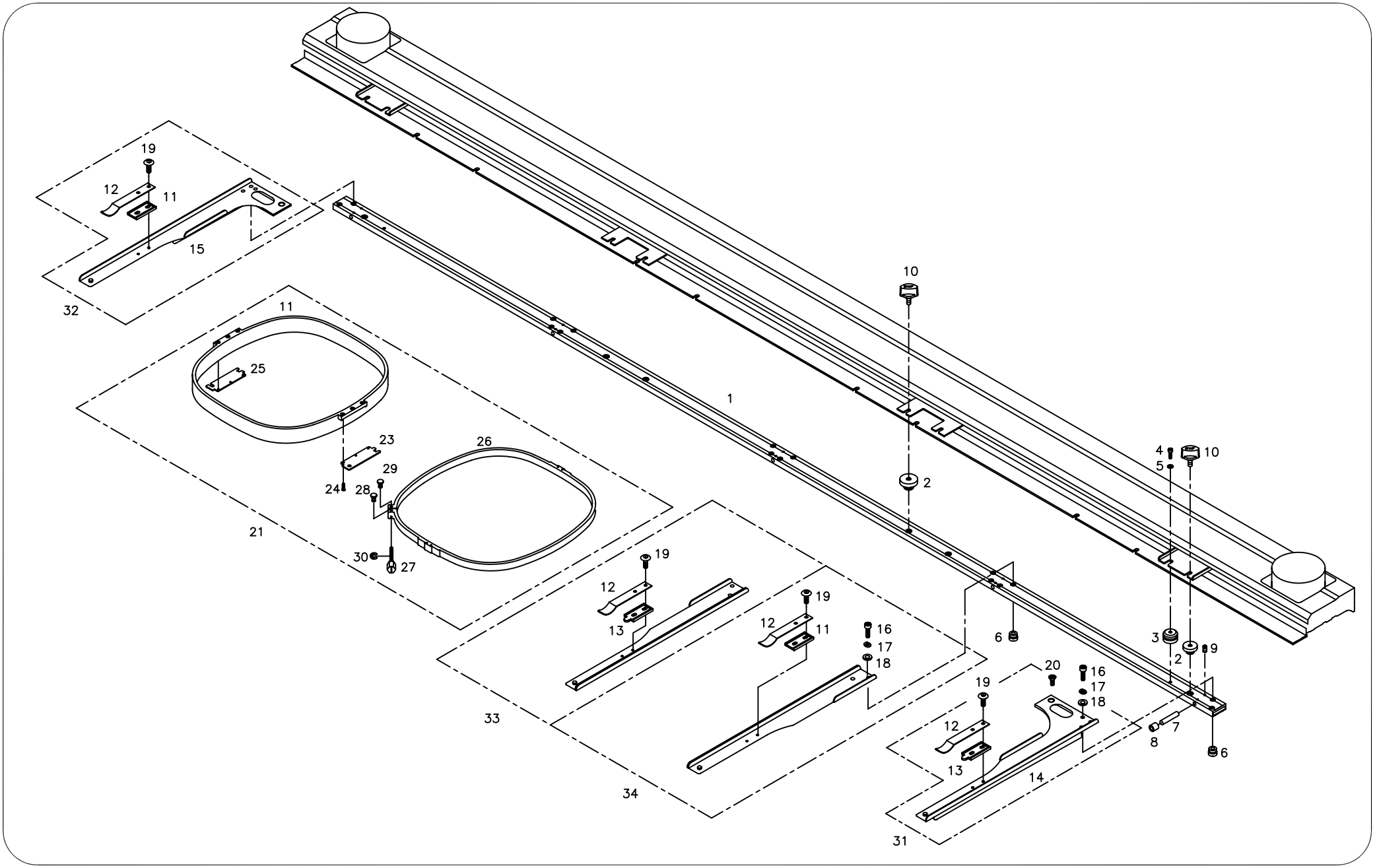

Ref.No	Part No.	Part Names	Q'ty
O2001	GP-010469-00	Tubular Frame	1
O2002	22002CW-UK01	Screw Bush "A"	6
O2003	22003CW-UK01	Location Block	2
O2004	11029SC-4113	Hex. Socket Bolt (M4*L20)	2
O2005	05009SW-1111	Washer (@4-L)	2
O2006	GP-010408-00	SCREW BUSH C	32
O2007	22007BR-UK01	Bearing Pin	5
O2008	22009BR-UK01	Needle Bearing (Taf51010)	5
O2009	03022SC-4517	Hex. Socket Set Screw(M4*L5)	10
O2010	09000100U000	Tubular Frame Fixing Screw	6
O2011	22003PM-T121	Clip Bracket (L)	4
O2012	22005PR-T121	Clip	8
O2013	22004PM-T121	Clip Bracket (R)	4
O2014	09100100U000	Attachment (R)	1
O2015	09200100U000	Attachment (L)	1
O2016	02015SC-7113	Hex.Socket Bolt(M4*L10)	16
O2017	18014SW-3115	Spring Washer (@4-No2)	16
O2018	18015SW-3111	Washer (4@)	16
O2019	09100200U000	Fixed Clip Bracket Screw	16
O2020	02002SC-7119	Pluss Screw (M4*L8)	2
O2021	22038BM-UK01	Tubular Set	8
O2022	22038PM-UK01	Tubular (Inner) 45*44	8
O2023	17014PR-UK01	Tubular Holder "A"	8
O2024	10011SC-8119	Plus Screw (M3*L6)	48
O2025	17015PR-UK01	Tubular Holder "B"	8
O2026	22043PM-UK01	Tubular (Outer) 45*44	8
O2027	22044CW-UK01	Adjusting Bolt	8
O2028	22045CW-UK01	Adjusting Bolt Guide	8
O2029	22046CW-UK01	Adjusting Nut	8
O2030	15159SR-4013	E-Ring (3@)	8
O2031	09100000U000	Attachment (R)	1
O2032	09200000U000	Attachment (L)	1
O2033	09100410U000	Attachment (Set-L)	3
O2034	09100510U000	Attachment (Set-R)	3

Ref. No	Part No.	Part Names	Q'ty

O3 Tubular Frame(UK1206)

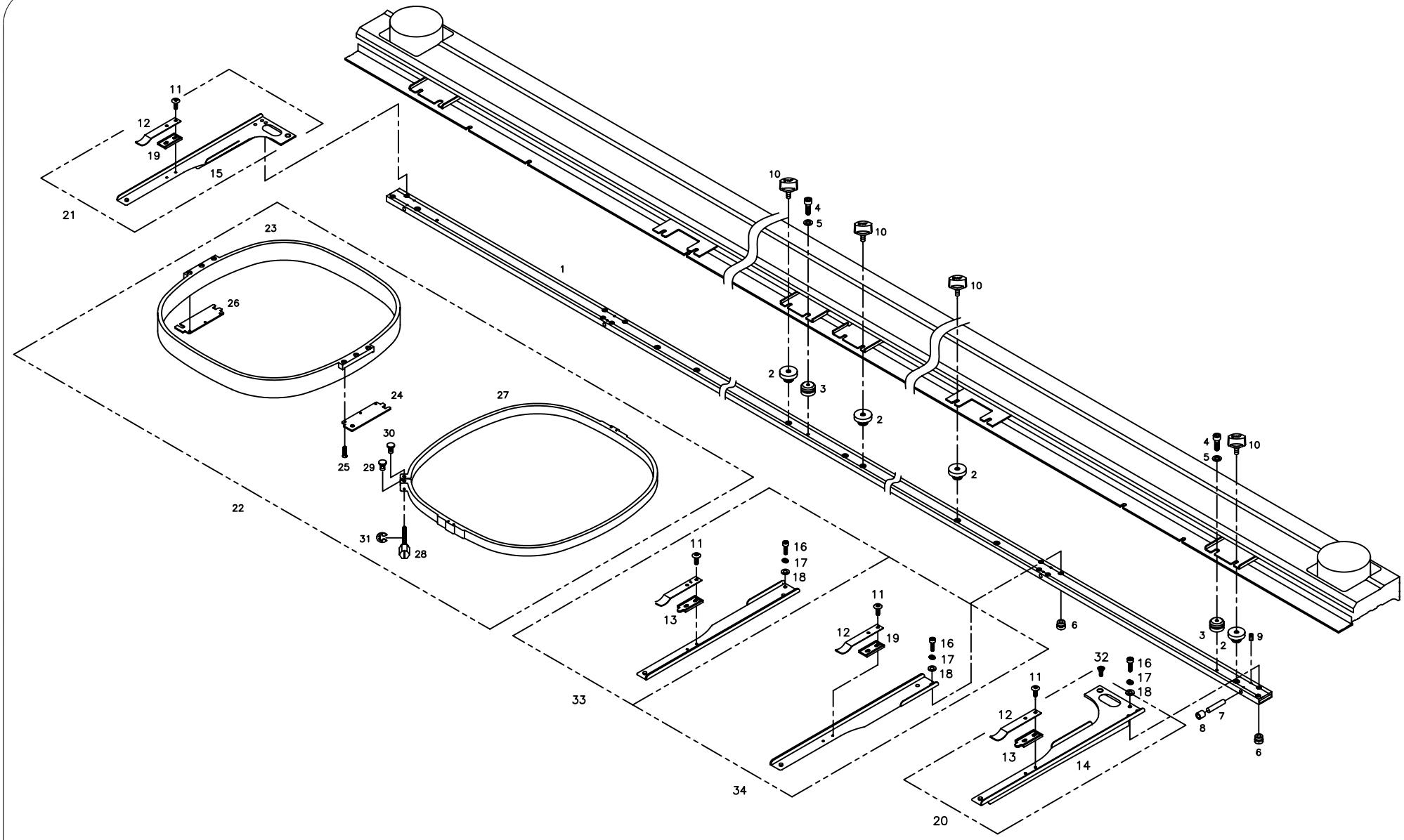

Ref.No	Part No.	Part Names	Q'ty
O3001	22001AD-UK06	Tubular Frame L=3000	1
O3002	22002CW-UK01	Screw Bush "A"	9
O3003	22003CW-UK01	Location Block	3
O3004	11029SC-4113	Hex. Socket Bolt (M4*L20)	3
O3005	05009SW-1111	Washer (@4-L)	3
O3006	GP-010408-00	SCREW BUSH C	36
O3007	22007BR-UK01	Bearing Pin	7
O3008	22009BR-UK01	Needle Bearing (Taf51010)	7
O3009	03022SC-4517	Hex. Socket Set Screw(M4*L5)	14
O3010	09000100U000	Tubular Frame Fixing Screw	9
O3011	09100200U000	Fixed Clip Bracket Screw	24
O3012	22005PR-T121	Clip	12
O3013	22004PM-T121	Clip Bracket (R)	6
O3014	09100100U000	Attachment (R)	1
O3015	09200100U000	Attachment (L)	1
O3016	02015SC-7113	Hex.Socket Bolt(M4*L10)	24
O3017	18014SW-3115	Spring Washer (@4-No2)	24
O3018	18015SW-3111	Washer (4@)	24
O3019	22003PM-T121	Clip Bracket (L)	6
O3020	09100000U000	Attachment (R)	1
O3021	09200000U000	Attachment (L)	1
O3022	22038BM-UK01	Tubular Set	12
O3023	22038PM-UK01	Tubular (Inner) 45*44	12
O3024	17014PR-UK01	Tubular Holder "A"	12
O3025	10011SC-8119	Plus Screw (M3*L6)	72
O3026	17015PR-UK01	Tubular Holder "B"	12
O3027	22043PM-UK01	Tubular (Outer) 45*44	12
O3028	22044CW-UK01	Adjusting Bolt	12
O3029	22045CW-UK01	Adjusting Bolt Guide	12
O3030	22046CW-UK01	Adjusting Nut	12
O3031	15159SR-4013	E-Ring (3@)	12
O3032	02002SC-7119	Pluss Screw (M4*L8)	2
O3033	09100410U000	Attachment (Set-L)	5
O3034	09100510U000	Attachment (Set-R)	5

Ref. No	Part No.	Part Names	Q'ty

04 Tubular Frame (UH1506C)

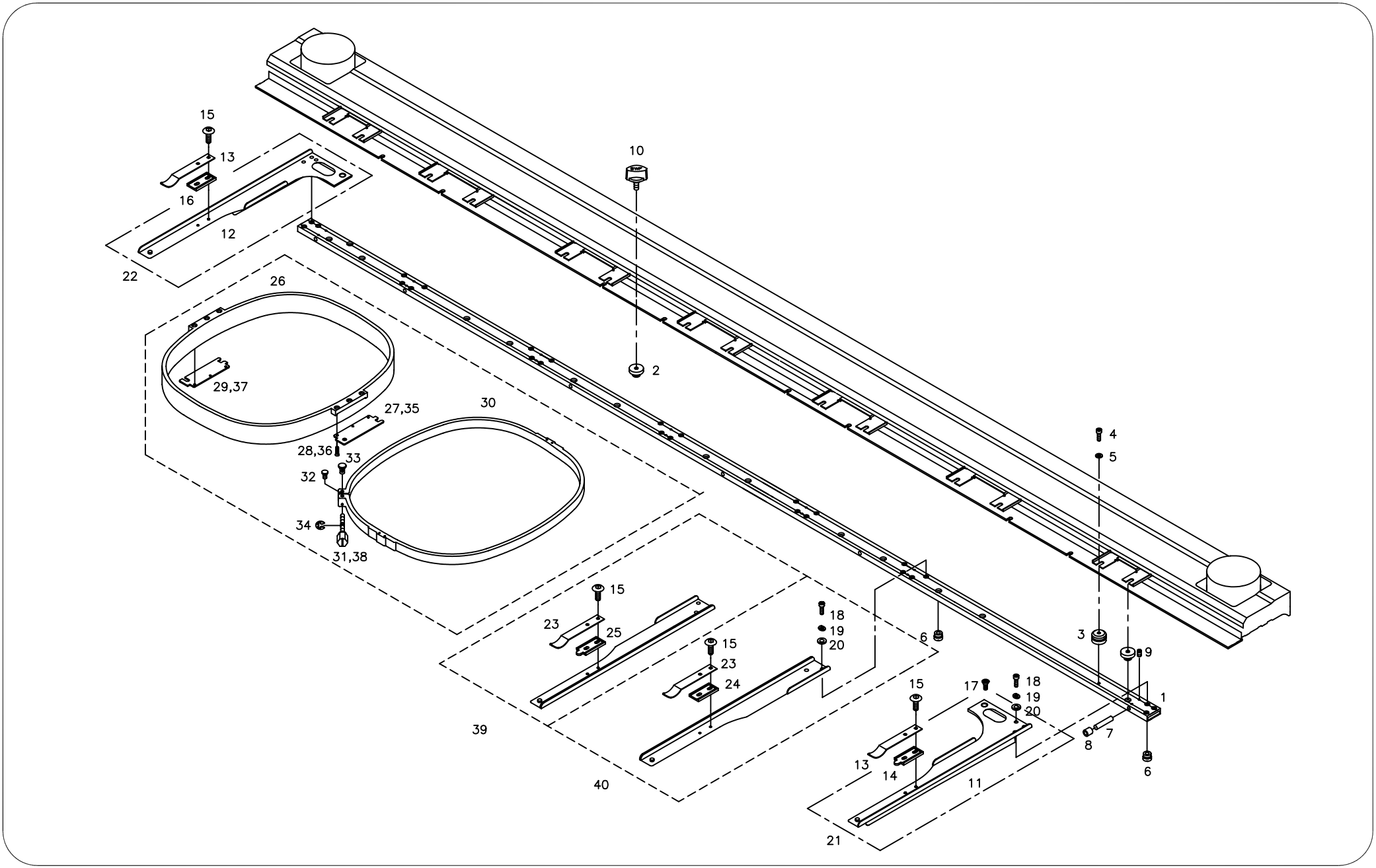

Ref.No	Part No.	Part Names	Q'ty
O4001	08100100UH60	Tubular Frame L2404	1
O4002	22002CW-UK01	Screw Bush "A"	10
O4003	22003CW-UK01	Location Block	2
O4004	11029SC-4113	Hex. Socket Bolt (M4*L20)	2
O4005	05009SW-1111	Washer (@4-L)	2
O4006	GP-0010408-00	SCREW BUSH C	28
O4007	22007BR-UK01	Bearing Pin	7
O4008	22009BR-UK01	Needle Bearing (Taf51010)	7
O4009	03022SC-4517	Hex. Socket Set Screw(M4*L5)	14
O4010	09000100U000	Tubular Frame Fixing Screw	10
O4011	09100100U000	Attachment (R)	1
O4012	09200100U000	Attachment (L)	1
O4013	22005PR-T121	Clip	2
O4014	22004PM-T121	Clip Bracket (R)	1
O4015	09100200U000	Fixed Clip Bracket Screw	24
O4016	17008PR-UK01	Attachment (L)	1
O4017	02002SC-7119	Pluss Screw (M4*L8)	2
O4018	02015SC-7113	Hex.Socket Bolt(M4*L10)	26
O4019	18014SW-3115	Spring Washer (@4-No2)	26
O4020	18015SW-3111	Washer (4@)	26
O4021	09100000U000	Attachment (R)	1
O4022	09200000U000	Attachment (L)	1
O4023	22005PR-T121	Clip	10
O4024	22004PM-T121	Clip Bracket (R)	5
O4025	22003PM-T121	Clip Bracket (L)	5
O4026	08200100UH00	Tubular (Inner)	12
O4027	17014PR-UK01	Tubular Holder "A"	12
O4028	10011SC-8119	Plus Screw (M3*L6)	36
O4029	17015PR-UK01	Tubular Holder "B"	12
O4030	08200200UH00	Tubular (Outer)	12
O4031	22044CW-UK01	Adjusting Bolt	12
O4032	22045CW-UK01	Adjusting Bolt Guide	12
O4033	22046CW-UK01	Adjusting Nut	12
O4034	15159SR-4013	E-Ring (3@)	12
O4035	08200300UH00	Tubular Frame Holder (L)	12
O4036	15064AF-A001	C.S Screw (M3*L3.5)	48
O4037	08200400UH00	Tubular Frame Holder (R)	12
O4038	22044CW-UK01	Adjusting Bolt	12
O4039	09100410U000	Attachment (Set-L)	5
O4040	09100510U000	Attachment (Set-R)	5

Ref. No	Part No.	Part Names	Q'ty

05 Tubular Frame (UH1508)

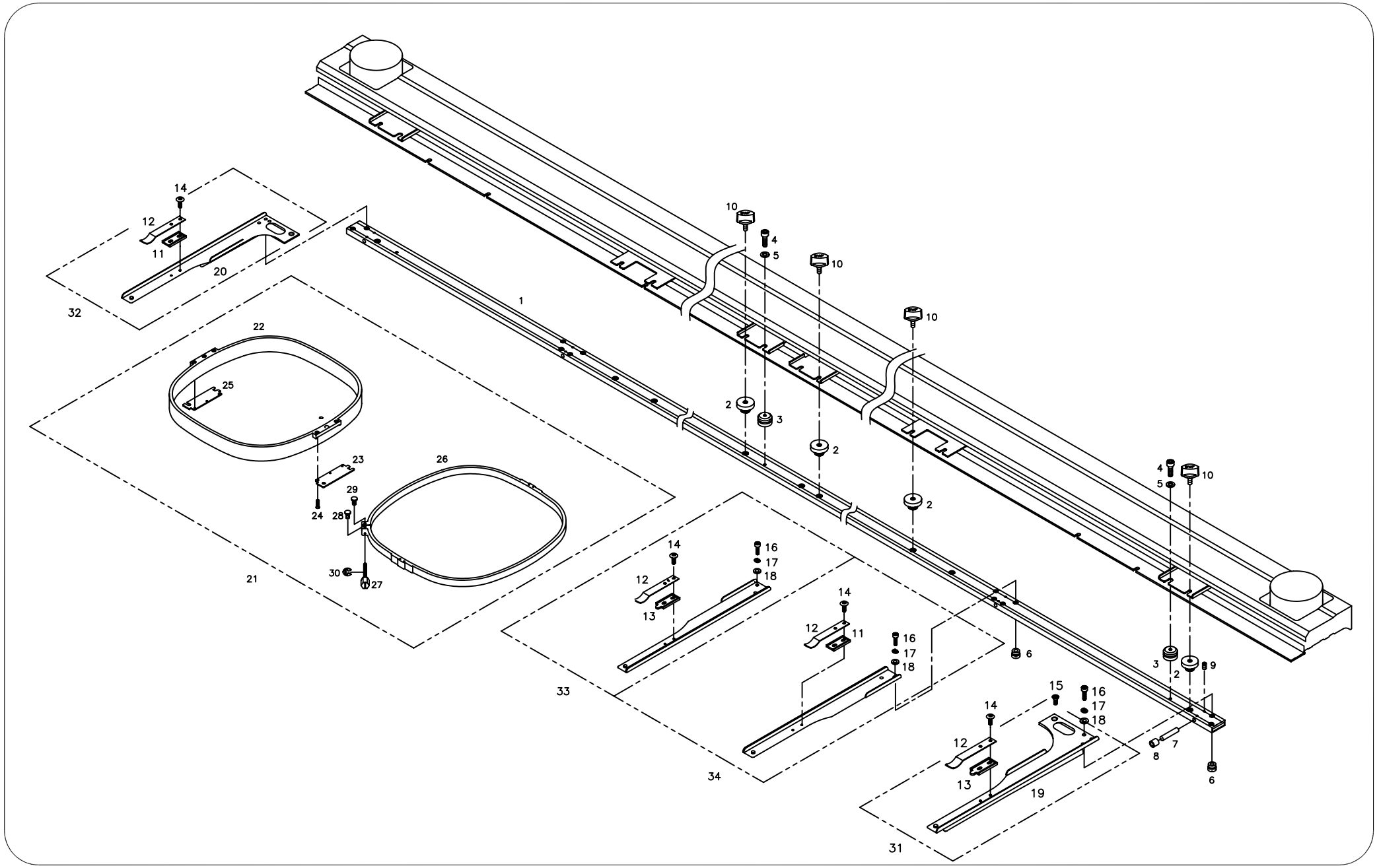

Ref.No	Part No.	Part Names	Q'ty
O5001	08100100UH80	Tubular Frame L3204	1
O5002	22002CW-UK01	Screw Bush "A"	10
O5003	22003CW-UK01	Location Block	2
O5004	11029SC-4113	Hex. Socket Bolt (M4*L20)	2
O5005	05009SW-1111	Washer (@4-L)	2
O5006	GP-010408-00	SCREW BUSH C	46
O5007	22007BR-UK01	Bearing Pin	9
O5008	22009BR-UK01	Needle Bearing (Taf51010)	9
O5009	03022SC-4517	Hex. Socket Set Screw(M4*L5)	8
O5010	09000100U000	Tubular Frame Fixing Screw	10
O5011	22003PM-T121	Clip Bracket (L)	8
O5012	22005PR-T121	Clip	16
O5013	22004PM-T121	Clip Bracket (R)	8
O5014	09100200U000	Fixed Clip Bracket Screw	32
O5015	02002SC-7119	Pluss Screw (M4*L8)	2
O5016	02015SC-7113	Hex.Socket Bolt(M4*L10)	32
O5017	18014SW-3115	Spring Washer (@4-No2)	32
O5018	18015SW-3111	Washer (4@)	32
O5019	09100100U000	Attachment (R)	1
O5020	09200100U000	Attachment (L)	1
O5021	22038BM-UK01	Tubular Set	16
O5022	22038PM-UK01	Tubular (Inner) 45*44	16
O5023	17014PR-UK01	Tubular Holder "A"	16
O5024	10011SC-8119	Plus Screw (M3*L6)	96
O5025	17015PR-UK01	Tubular Holder "B"	16
O5026	22043PM-UK01	Tubular (Outer) 45*44	16
O5027	22044CW-UK01	Adjusting Bolt	16
O5028	22045CW-UK01	Adjusting Bolt Guide	16
O5029	22046CW-UK01	Adjusting Nut	16
O5030	15159SR-4013	E-Ring (3@)	16
O5031	09100000U000	Attachment (R)	1
O5032	09200000U000	Attachment (L)	1
O5033	09100410U000	Attachment (Set-L)	7
O5034	09100510U000	Attachment (Set-R)	7

Ref. No	Part No.	Part Names	Q'ty

P1

Border Frame (UK1202)

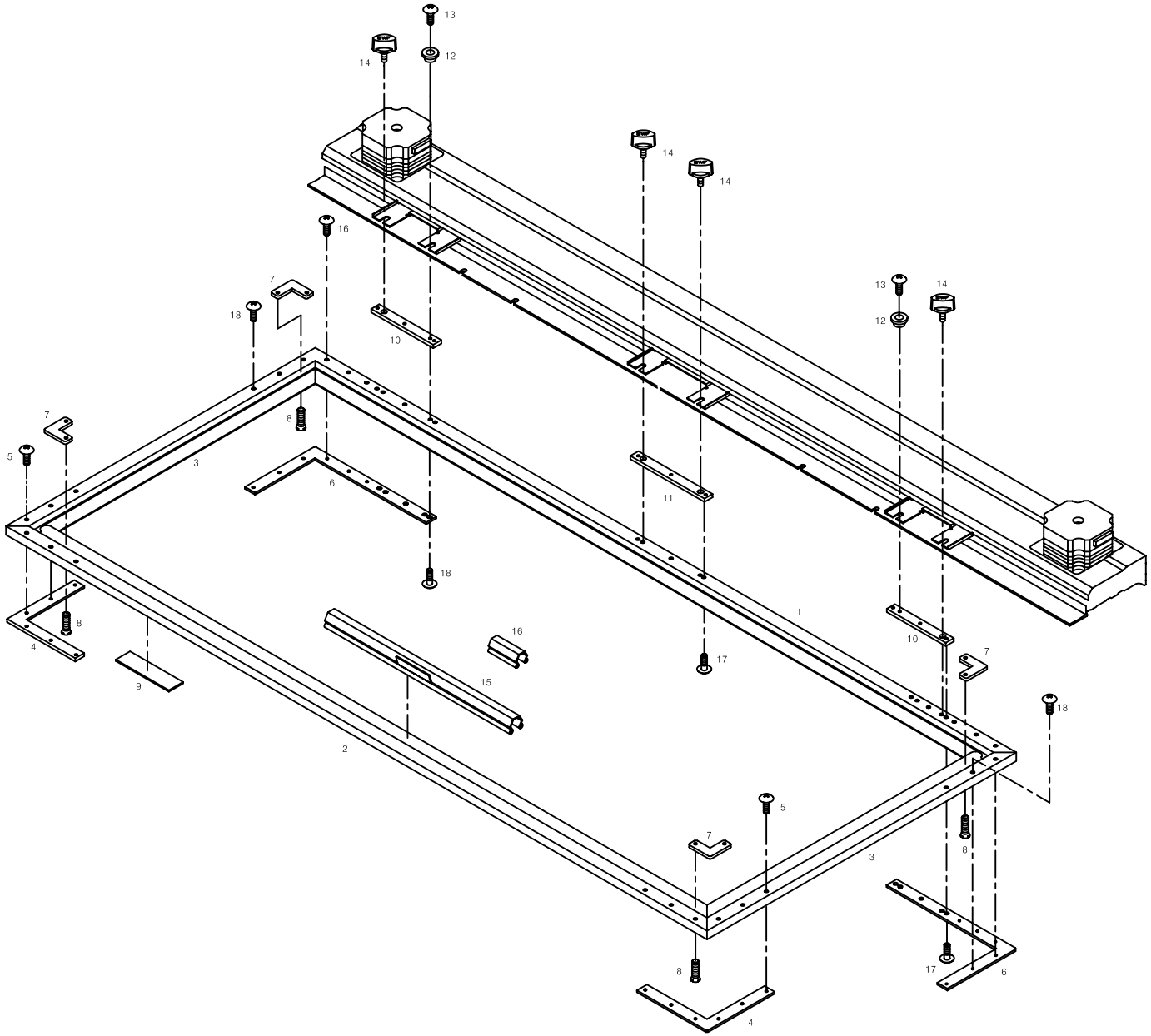

Ref.No	Part No.	Part Names	Q'ty
P1001	24001AD-UK02	Rear Border Frame Sash	1
P1002	24002AD-UK02	Rear Border Frame Sash	1
P1003	24007AD-UK01	Border Frame Sash L=575	2
P1005	02044SC-3123	Truss Screw (M5*L8)	24
P1006	24004PR-UK02	Connecting Plate "E"	2
P1007	24011PR-T121	Connecting Plate "C"	4
P1008	10010SC-8119	Plus Screw (M3*L5)	8
P1009	24016SF-T121	Felt	10
P1010	24008PR-UK02	Square Frame Fixiing Plate A	2
P1011	24011PR-UK02	Square Frame Fixiing Plate B	1
P1012	18025PM-UK01	Location Block	2
P1013	18153SC-3123	Plus Screw (M4*L10)	2
P1014	09000100U000	Tubular Frame Fixing Screw	4
P1015	18084PR-A001	Embroidery Frame Clip L,300	2
	18085PR-A001	Embroidery Frame Clip	2
	18085PR-T121	Embroidery Frame Clip L,220	4
P1016	18086PR-B001	Frame Clip Support	16
P1017	15042SC-3123	Truss Screw (M4*L6)	6
P1018	02010SC-3123	Truss Screw (M4*L8)	6

Ref. No	Part No.	Part Names	Q'ty

P2

Border Frame(UK1204)

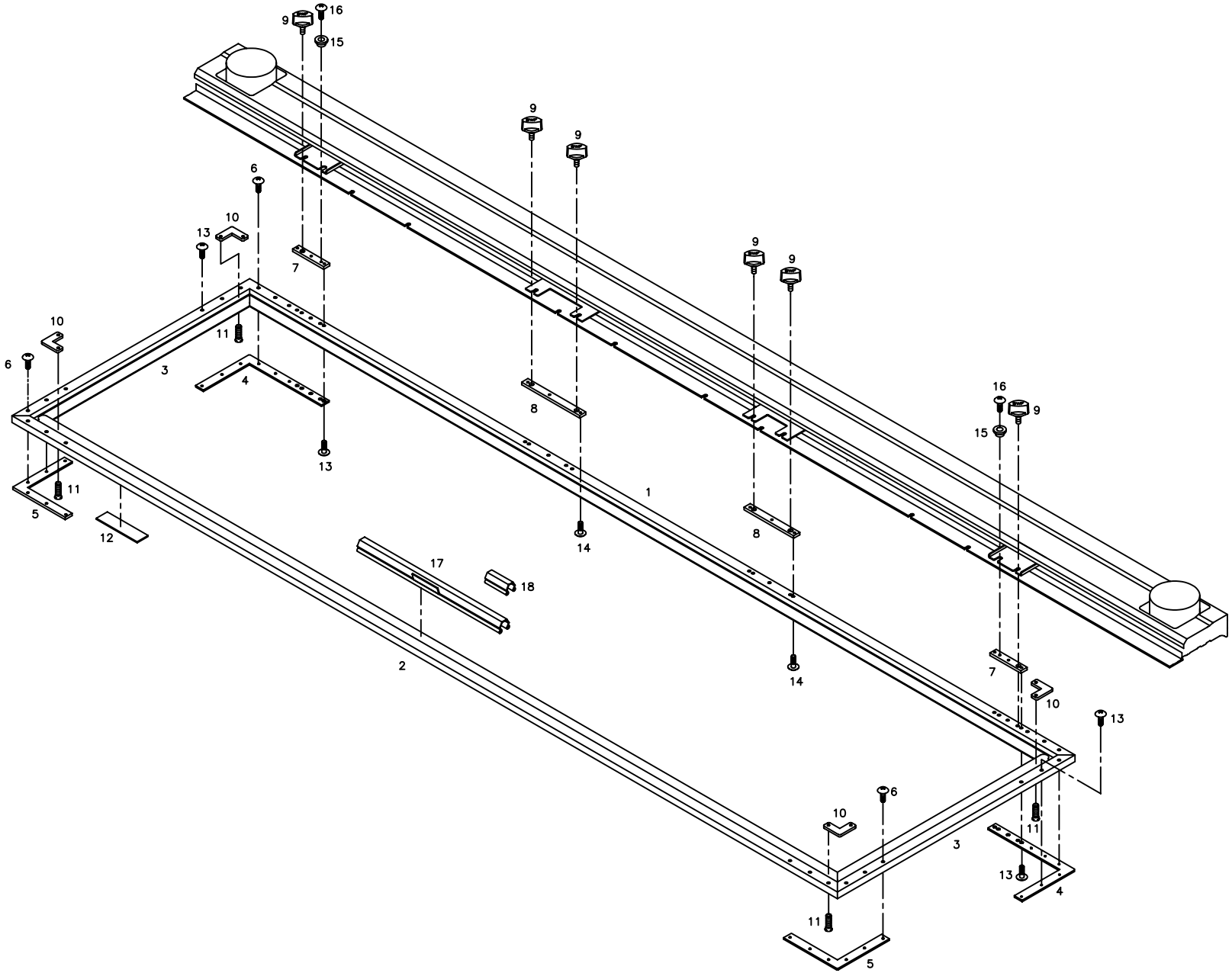

Ref.No	Part No.	Part Names	Q'ty
P2001	08300100UK40	Rear Border Frame Sash L=2160	1
P2002	24006AD-UK01	Front Border Frame Sash L=2143	1
P2003	24007AD-UK01	Border Frame Sash L=575	2
P2004	24004PR-UK02	Connecting Plate "E"	2
P2005	24004PR-UK01	Connecting Plate "F"	2
P2006	02044SC-3123	Truss Screw (M5*L8)	24
P2007	24008PR-UK02	Square Frame Fixiing Plate A	2
P2008	24011PR-UK02	Square Frame Fixiing Plate B	2
P2009	09000100U000	Tubular Frame Fixing Screw	6
P2010	24011PR-T121	Connecting Plate "C"	4
P2011	10010SC-8119	Plus Screw (M3*L5)	8
P2012	24016SF-T121	Felt	19
P2013	02010SC-3123	Truss Screw (M4*L8)	6
P2014	15042SC-3123	Truss Screw (M4*L6)	6
P2015	18025PM-UK01	Location Block	2
P2016	18153SC-3123	Plus Screw (M4*L10)	2
P2017	18084PR-A001	Embroidery Frame Clip L,300	10
	18085PR-A001	Embroidery Frame Clip	6
	18085PR-T121	Embroidery Frame Clip L,220	2
P2018	18086PR-B001	Frame Clip Support	36

Ref. No	Part No.	Part Names	Q'ty

P3

Border Frame(UK1206)

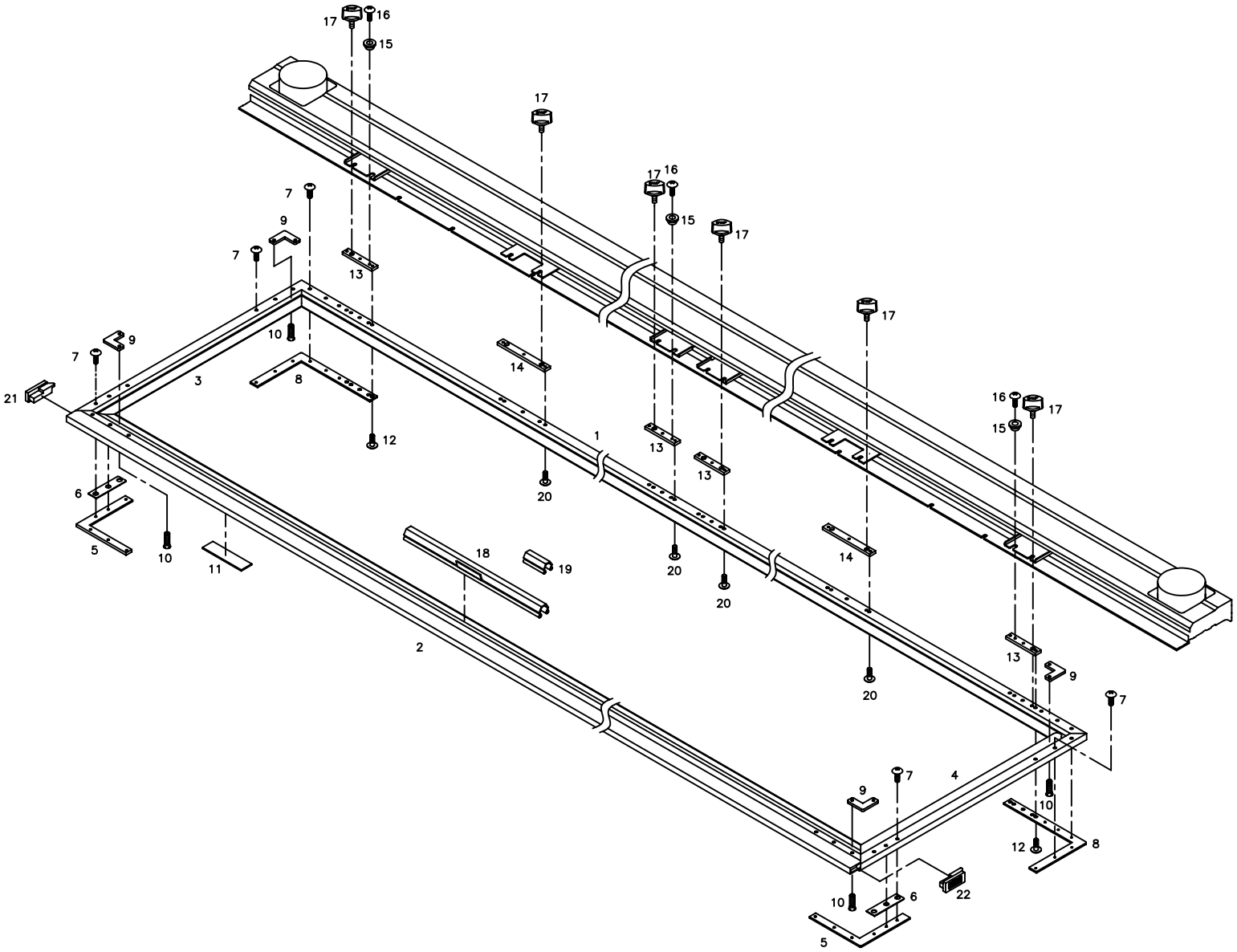

Ref.No	Part No.	Part Names	Q'ty
P3001	24001AD-UK06	Square Frame (A)	1
P3002	24004AD-UK06	Square Frame (B) L=3152	1
P3003	24007AD-UK06	Square Frame (D) L=583	1
P3004	24006AD-UK06	Square Frame (C) L=583	1
P3005	24008PR-UK06	Connecting Plate (F)	2
P3006	24005PR-UK06	Frame Space	2
P3007	02044SC-3123	Truss Screw (M5*L8)	24
P3008	24004PR-UK02	Connecting Plate "E"	2
P3009	24011PR-T121	Connecting Plate "C"	4
P3010	10010SC-8119	Plus Screw (M3*L5)	8
P3011	24016SF-T121	Felt	23
P3012	15042SC-3123	Truss Screw (M4*L6)	6
P3013	24008PR-UK02	SQUARE FRAME FIXIING PLATE A	4
P3014	24011PR-UK02	SQUARE FRAME FIXIING PLATE B	2
P3015	18025PM-UK01	Location Block	3
P3016	18153SC-3123	Plus Screw (M4*L10)	3
P3017	09000100U000	Tubular Frame Fixing Screw	9
P3018	18084PR-A001	Embroidery Frame Clip L,300	16
	18085PR-A001	Embroidery Frame Clip	6
	18085PR-T121	Embroidery Frame Clip L,220	2
P3019	18086PR-B001	Frame Clip Support	48
P3020	02010SC-3123	Truss Screw (M4*L8)	12
P3021	24026RB-UK06	Rubber Cap (L)	1
P3022	24027RB-UK06	Rubber Cap (R)	1

Ref. No	Part No.	Part Names	Q'ty

P4

Border Frame(UH1506C)

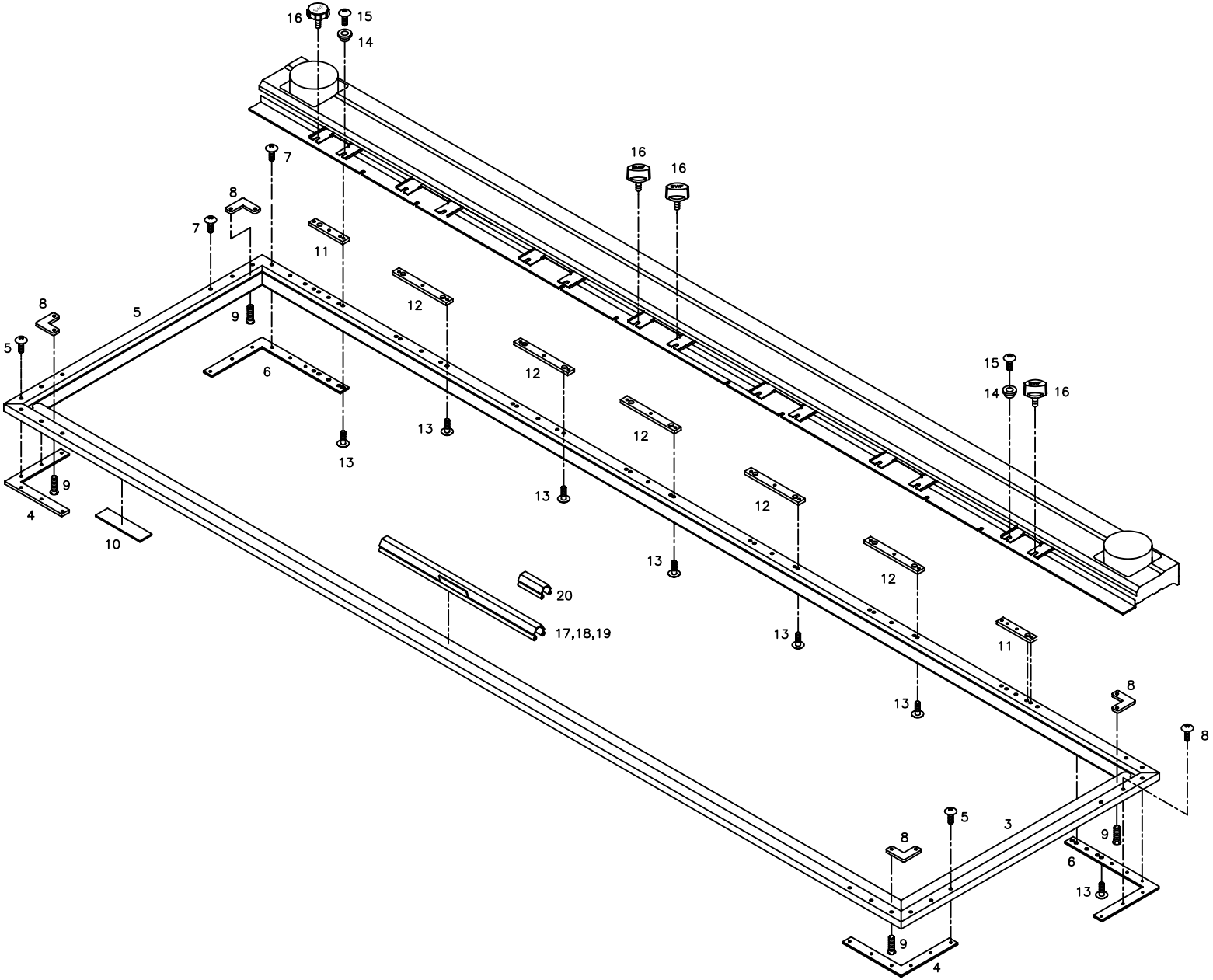

Ref.No	Part No.	PartNames	Q'ty
P4001	08300100UH00	Square Frame "A" L=2544	1
P4002	08300200UH00	Square Frame "B" L=2544	1
P4003	24007AD-UK01	Border Frame Sash L=575	2
P4004	24004PR-UK01	Connecting Plate "F"	2
P4005	02044SC-3123	Truss Screw (M5*L8)	12
P4006	08300300UH00	Connect Plate (E)	2
P4007	02044SC-3123	Truss Screw (M5*L8)	12
P4008	24011PR-T121	Connecting Plate "C"	4
P4009	10010SC-8119	Plus Screw (M3*L5)	8
P4010	24016SF-T121	Felt	19
P4011	24008PR-UK02	Square Frame Fixiing Plate A	2
P4012	24011PR-UK02	Square Frame Fixiing Plate B	4
P4013	15042SC-3123	Truss Screw (M4*L6)	18
P4014	18025PM-UK01	Location Block	2
P4015	18153SC-3123	Plus Screw (M4*L10)	2
P4016	09000100U000	Tubular Frame Fixing Screw	8
P4017	18084PR-A001	Embroidery Frame Clip L,300	16
P4018	18085PR-A001	Embroidery Frame Clip	2
P4019	18085PR-T121	Embroidery Frame Clip L,220	2
P4020	18086PR-B001	Frame Clip Support	36

Ref. No	Part No.	Part Names	Q'ty

P5

Border Frame(UH1508)

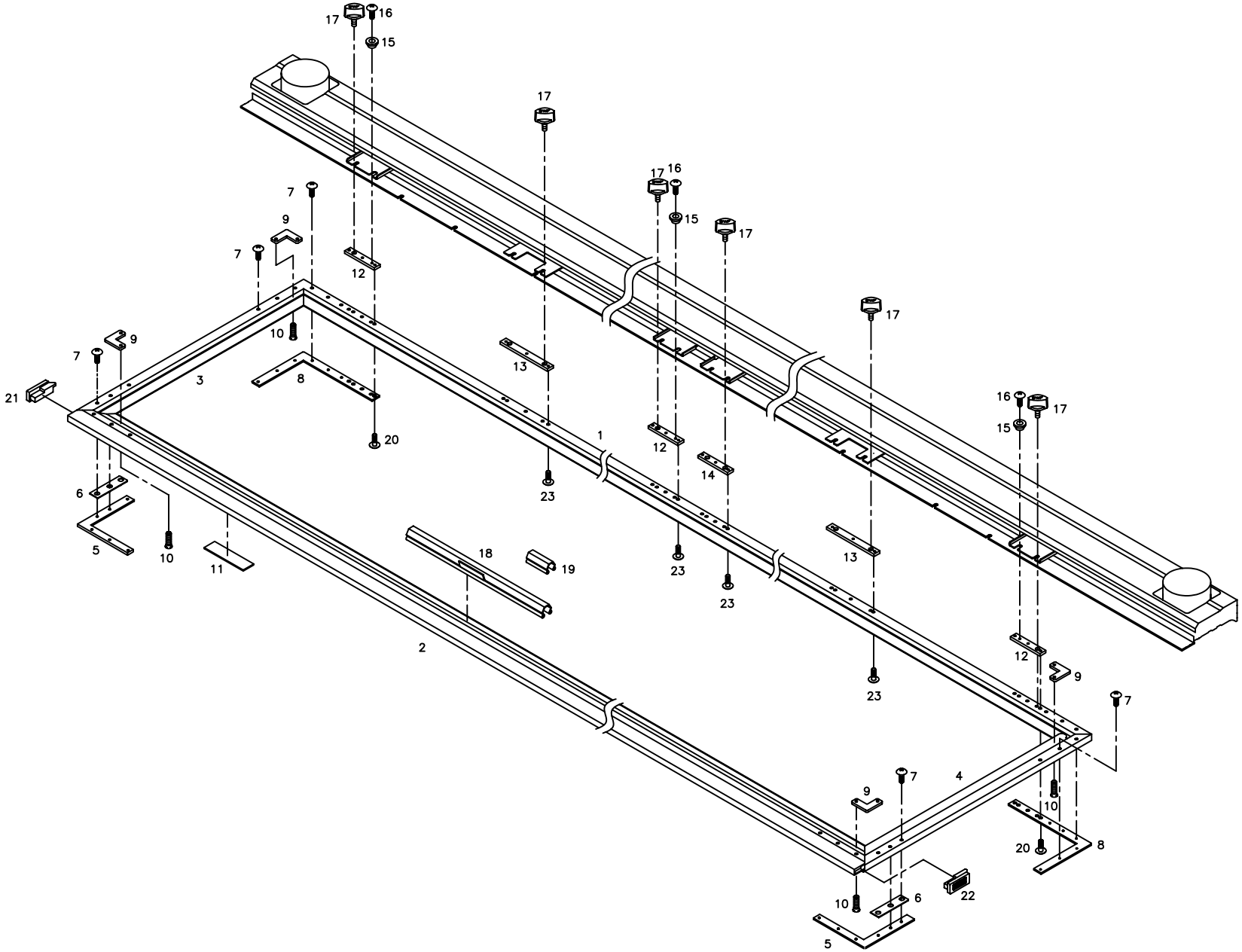

Ref.No	Part No.	Part Names	Q'ty
P5001	08300100UH80	Square Frame "A" L=3344	1
P5002	08300200UH80	Square Frame "B" L=3344	1
P5003	24007AD-UK06	Square Frame (D) L=583	1
P5004	24006AD-UK06	Square Frame (C) L=583	1
P5005	24008PR-UK06	Connecting Plate (F)	2
P5006	24005PR-UK06	Frame Space	2
P5007	02044SC-3123	Truss Screw (M5*L8)	24
P5008	24004PR-UK02	Connecting Plate "E"	2
P5009	24011PR-T121	Connecting Plate "C"	4
P5010	10010SC-8119	Plus Screw (M3*L5)	8
P5011	24016SF-T121	Felt	23
P5012	24009AD-UK01	Fixing Plate (A)	3
P5013	24010AD-UK01	Fixing Plate (B)	2
P5014	24017AD-UK06	Fixing Plate For Frame	1
P5015	18025PM-UK01	Location Block	3
P5016	18153SC-3123	Plus Screw (M4*L10)	3
P5017	09000100U000	Tubular Frame Fixing Screw	9
P5018	18084PR-A001	Embroidery Frame Clip L,300	16
	18085PR-A001	Embroidery Frame Clip	6
	18085PR-T121	Embroidery Frame Clip L,220	2
P5019	18086PR-B001	Frame Clip Support	48
P5020	15042SC-3123	Truss Screw (M4*L6)	6
P5021	24026RB-UK06	Rubber Cap (L)	1
P5022	24027RB-UK06	Rubber Cap (R)	1
P5023	02010SC-3123	Truss Screw (M4*L8)	12

Ref. No	Part No.	Part Names	Q'ty

Q

S/B Switch Unit

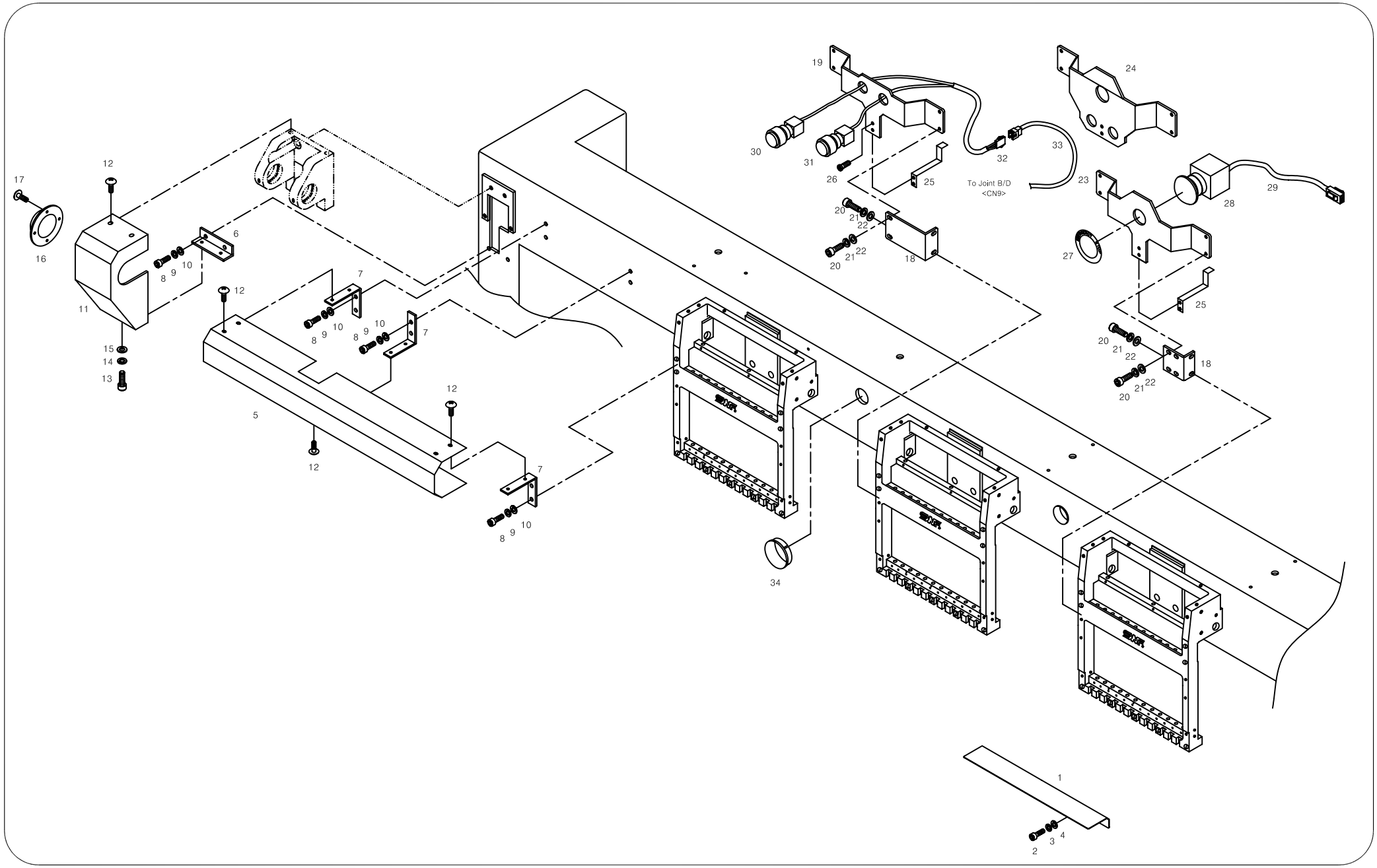

Ref.No	Part No.	Part Names		Q'ty
Q-001	01000214UK00	SURFACE COVER "B"	(UK1202)(UK1206)	1
	01000204UK40	Surface Cover "B"	(UK1204)	
	09000415UH00	SURFACE COVER L287	(UH1506C)	
Q-002	02015SC-7113	Hex.Socket Bolt(M4*L10)		11
Q-003	02028SW-9115	Spring Washer (@4)		15
Q-004	05009SW-1111	Washer (@4-L)		18
Q-005	01000710UK00	TOP SHAFT COVER	(UK1202)(UK1204)	1
	01000710UK60	TOP SHAFT COVER	(UK1206)	
	09000515UH00	Top Shaft Cover D	(UH1506C)	
	09000505UH80	TOP SHAFT COVER D L=499.5	(UH1508)	
Q-006	02031PR-UK02	Pulley Cover Bracket		1
Q-007	02025PR-UK02	Top Shaft Cover (C) Bracket L		3
Q-008	02031SC-7113	Hex. Socket Screw(M5*L10)		10
Q-009	18048SW-3115	Spring Washer (@5)		24
Q-010	16018SW-1111	Washer (@5)		8
Q-011	01001000UK00	Top Shaft Pulley Cover		1
Q-012	15042SC-3123	Truss Screw (M4*L6)		7
Q-013	02023SC-7113	HEX.SOCKET BOLT (M4*L8)		2
Q-014	18014SW-3115	SPRING WASHER (@4-NO2)		2
Q-015	18015SW-3111	WASHER (4@)		2
Q-016	01001100UK00	Top Shaft Pulley Cover B		1
Q-017	09005SC-3123	Truss Screw (M3*L6)		4
Q-018	04000204UK00	Switch Base Holder		6
Q-019	02024LA-UK14	S/B Switch Base		2
Q-020	14002SC-7113	Hex.Socket Bolt (M6*L15)		6
Q-021	16014SW-4115	Spring Washer (@6)		22
Q-022	08057SW-1111	Washer (@6)		22
Q-023	02028LA-UK14	Emergency Switch Base		1
Q-024	02008LA-UK12	Switch Base	(UK1202)	1
Q-025	02062PR-UI12	Cable Holder		3
Q-026	15089SC-7119	C.S Screw (M4*L10)		3
Q-027	02103ET-UK01	Emergency Switch Sticker		1
Q-028	02000800T000	Emergency Switch Set		1
Q-029	02106400U000	Emeguncy S/W Cable		1
Q-030	02027EL-UK01	S/B Switch Set		2
Q-031	02026EL-UK01	Start Switch Set		2
Q-032	25032EL-UK01	Start Stop Switch (4Ht-32)	(UK1202)(UK1204)	2
	25028EL-UK06	Cable (25-28)	(UK1206)	
	25032EL-UK01	Start Stop Switch (4Ht-32)	(UH1506C)	
	25028EL-UK06	Cable (25-28)	(UH1508)	

Ref. No	Part No.	Part Names		Q'ty
Q-033	25030EL-UK02	Cable (25-30) 2Head	(UK1202)	1
	25031EL-UK01	To Joint B/D Cable (4Ht-31)	(UK1204)	
	25027EL-UK06	Cable (25-27)	(UK1206)	
	25051EL-UK01	Emergency Switch Cable 4Ht-51	(UH1506C)	
	02103000UH80	Cable (Sh-30-4)	(UH1508)	
Q-034	02017PM-A001	Cable Ring		4

R1 Sub Control Unit & Lamp(UK1202)

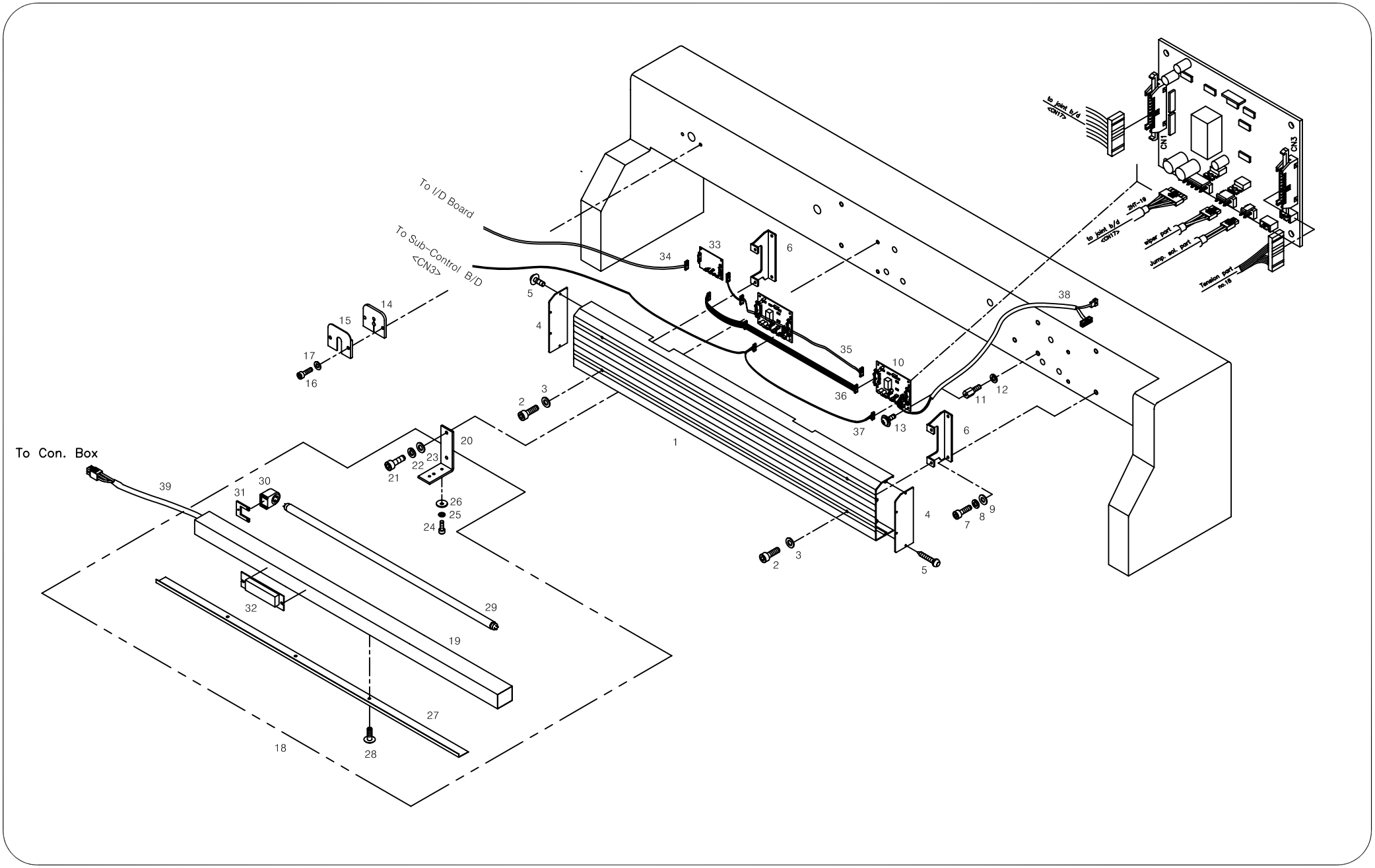

Ref.No	Part No.	Part Names	Q'ty
R1001	01005700UK20	BOARD COVER L=1318	1
R1002	02031SC-7113	Hex. Socket Screw(M5*L10)	4
R1003	18049SW-3111	Washer (@5)	4
R1004	12000200B000	CABLE COVER PLATE	2
R1005	02065SC-3328	TAPPING SCREW (M3*L10)	8
R1006	02000400B000	CABLE COVER HOLDER	2
R1007	08076SC-7113	Hex. Socket Bolt (M5*L12)	4
R1008	18048SW-3115	Spring Washer (@5)	4
R1009	16018SW-1111	Washer (@5)	4
R1010	11093EL-C001	Sub-Control Board Ver 2.3	2
R1011	11049SC-A001	Board Stud Bolt	8
R1012	18048SW-3115	Spring Washer (@5)	12
R1013	18154SC-9134	PLUS SCREW (M3*L8)	8
R1014	02054RB-UK01	Clamp Rubber	1
R1015	02053PR-UK01	Cable Clamp	1
R1016	18013AF-7113	Hex. Socket Bolt (M4*L10)	2
R1017	18049SW-3111	Washer (@5)	2
R1018	AS-001837-00	LAMP SET UK1202-45	1
R1019	20007BM-A001	Lamp Ass,Y "A"	1
R1020	11000100U000	LAMP BRACKET	2
R1021	08091SC-7113	Hex. Socket Bolt (M6*L20)	4
R1022	16014SW-4115	Spring Washer (@6)	4
R1023	08057SW-1111	Washer (@6)	4
R1024	14014SC-7113	Hex.Socket Set Screw(M5*L8)	10
R1025	18048SW-3115	Spring Washer (@5)	10
R1026	20038PR-T121	Washer (@8)	4
R1027	32016PR-UK02	RECFLECTING COVER	1
R1028	20014SC-9124	Hex. Socket Screw(M4*L8)	3
R1029	20009EL-B001	LAMP (32W)	1
R1030	20014ET-A001	Lamp Socket	2
R1031	GP-009003-00	Lamp Socket Fixed Plate	2
R1032	09000900B000	Ballast	1
R1033	22033EL-T126	Joint Board (Sh-Jnt) Ver2.3	1
R1034	09005SC-3123	Truss Screw (M3*L6)	4
R1035	02001400T000	JOINT BOARD STUD BOLT M4*L10	4
R1036	03-0000-HB11	Thread Control Joint Board	1
R1037	02105900U000	Sh-59	1
R1038	02106000U020	Sh-60-1	1
R1039	02105710U020	Cable (Sh-57-1)	1
R1040	02105600U020	Sh-56-1	1

Ref. No	Part No.	Part Names	Q'ty
R1041	25022EL-UK01	To Adjusting Plate (4Ht-22)	2
R1042	02105000E040	Cable(Ce4Ht-50)	1

R2 Sub Control Unit & Lamp(UK1204)

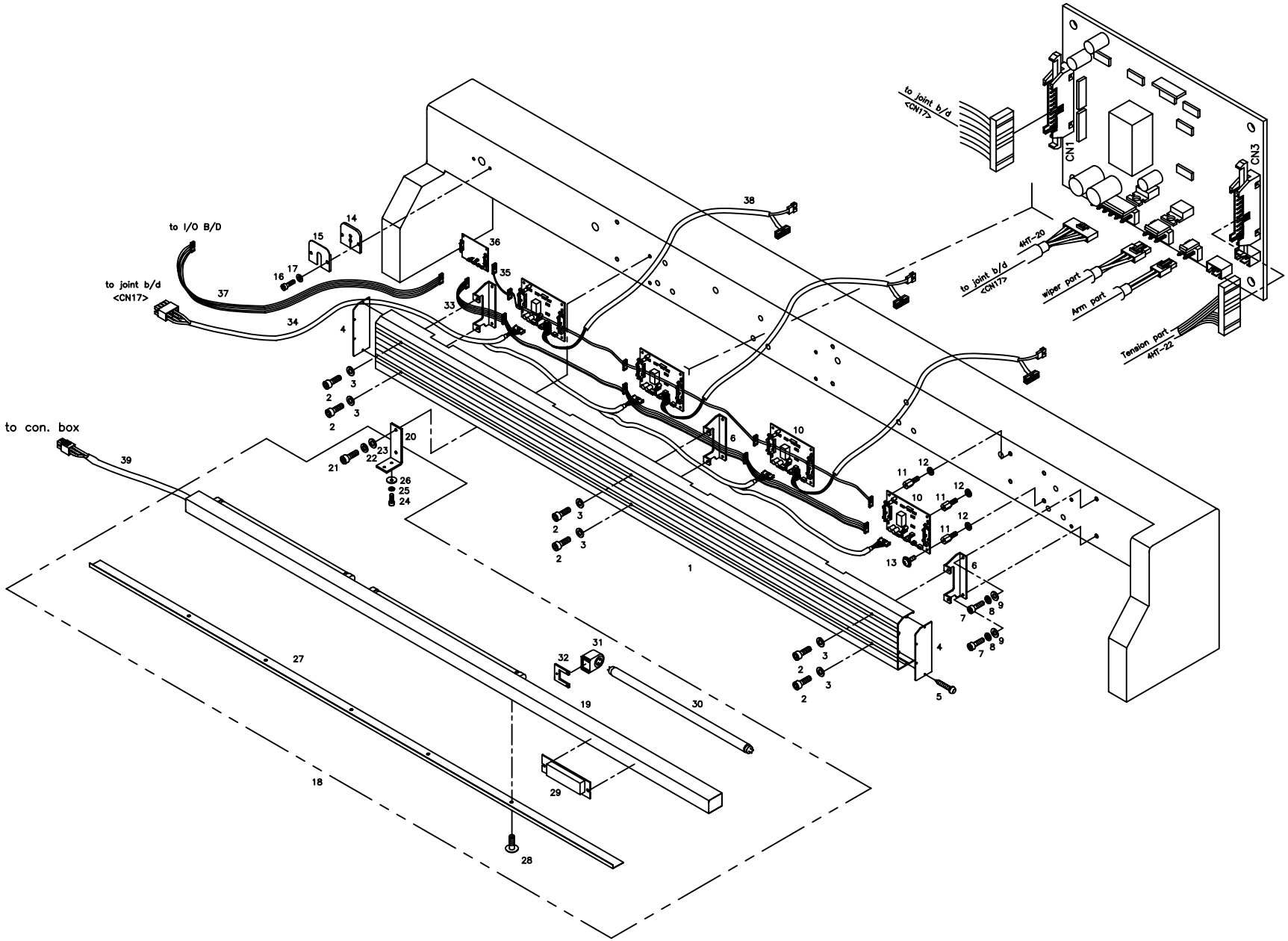

Ref.No	Part No.	Part Names	Q'ty
R2001	02057AD-UK01	Board Cover L=2035	1
R2002	02031SC-7113	Hex. Socket Screw(M5*L10)	10
R2003	18049SW-3111	Washer (@5)	8
R2004	12000200B000	CABLE COVER PLATE	2
R2005	02065SC-3328	Tapping Screw (M3*L10)	8
R2006	02000400B000	CABLE COVER HOLDER	3
R2007	08076SC-7113	Hex. Socket Bolt (M5*L12)	6
R2008	18048SW-3115	Spring Washer (@5)	6
R2009	16018SW-1111	Washer (@5)	6
R2010	11093EL-C001	SUB-CONTROL BOARD NC-THS2.3	4
R2011	11049SC-A001	Board Stud Bolt	16
R2012	18048SW-3115	Spring Washer (@5)	16
R2013	18154SC-9134	PLUS SCREW (M3*L8)	16
R2014	02054RB-UK01	Clamp Rubber	1
R2015	02053PR-UK01	Cable Clamp	1
R2016	18013AF-7113	Hex. Socket Bolt (M4*L10)	3
R2017	18049SW-3111	Washer (@5)	2
R2018	AS-001836-00	Lamp Set	1
R2019	32001PR-UK01	Lamp Ass'Y	1
R2020	11000100U000	LAMP BRACKET	3
R2021	08091SC-7113	Hex. Socket Bolt (M6*L20)	6
R2022	16014SW-4115	Spring Washer (@6)	6
R2023	08057SW-1111	Washer (@6)	6
R2024	14014SC-7113	Hex.Socket Set Screw(M5*L8)	15
R2025	18048SW-3115	Spring Washer (@5)	15
R2026	20038PR-T121	WASHER (@8)	6
R2027	32039PR-UK01	RECFLECTING COVER	1
R2028	20014SC-9124	Hex. Socket Screw(M4*L8)	5
R2029	09000700U000	Ballast (20W)	3
R2030	32020EL-UK01	Lamp	3
R2031	20014ET-A001	Lamp Socket	6
R2032	GP-009003-00	Lamp Socket Fixed Plate	6
R2033	22033EL-T126	Joint Board (Sh-Jnt) Ver2.3	1
R2034	09005SC-3123	Truss Screw (M3*L6)	4
R2035	02001400T000	JOINT BOARD STUD BOLT M4*L10	4
R2036	02105700U040	Cable (Sh-57-2)	1
R2037	02105610U040	Sh-56-2	1
R2038	02106000U040	Cable (Sh-60-2)	1
R2039	03-0000-HB11	Thread Control Joint Board	1
R2040	02105900U000	Sh-59	1

Ref. No	Part No.	Part Names	Q'ty
R2041	25022EL-UK01	To Adjusting Plate (4Ht-22)	1
R2042	02105000E040	Cable(Ce4Ht-50)	1

R3 Sub Control Unit & Lamp(UK1206)

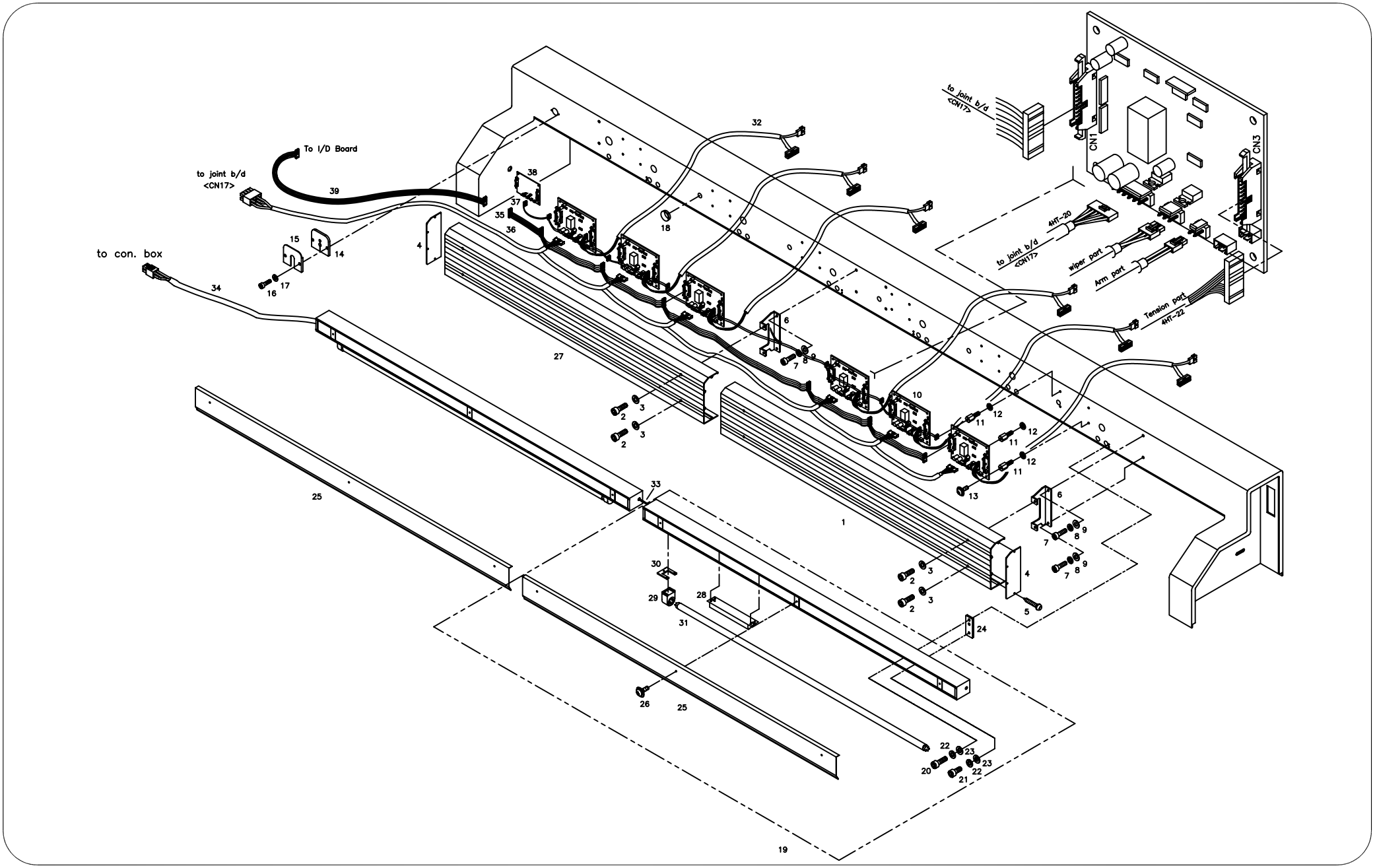

Ref.No	Part No.	Part Names	Q'ty
R3001	02057AD-A102	Borard Cover L=1599	2
R3002	02031SC-7113	Hex. Socket Screw(M5*L10)	8
R3003	18049SW-3111	Washer (@5)	8
R3004	12000200B000	CABLE COVER PLATE	2
R3005	02065SC-3328	Tapping Screw (M3*L10)	8
R3006	02000400B000	CABLE COVER HOLDER	4
R3007	08076SC-7113	Hex. Socket Bolt (M5*L12)	8
R3008	18048SW-3115	Spring Washer (@5)	8
R3009	16018SW-1111	Washer (@5)	8
R3010	11093EL-C001	SUB-CONTROL BOARD	6
R3011	11049SC-A001	Board Stud Bolt	28
R3012	18048SW-3115	Spring Washer (@5)	28
R3013	18154SC-9134	PLUS SCREW (M3*L8)	24
R3014	02054RB-UK01	Clamp Rubber	1
R3015	02053PR-UK01	Cable Clamp	1
R3016	18013AF-7113	Hex. Socket Bolt (M4*L10)	2
R3017	18049SW-3111	Washer (@5)	2
R3018	02017PM-A001	Cable Ring	5
R3019	AS-001838-00	Lamp Ass,Y "B"	2
R3020	03016SC-4113	Hex. Socket Bolt (M5*L15)	8
R3021	02031SC-7113	Hex. Socket Screw(M5*L10)	4
R3022	18048SW-3115	Spring Washer (@5)	12
R3023	16018SW-1111	Washer (@5)	12
R3024	20001PR-A001	Lamp Ass'Y Connecter	4
R3025	20009PR-A001	Reflecting	2
R3026	02010AF-3123	Truss Screw (M4*L8)	6
R3027	02093AD-UK06	Board Cover "A"	1
R3028	09005SC-3123	Truss Screw (M3*L6)	4
R3029	22033EL-T126	Joint Board (Sh-Jnt) Ver2.3	1
R3030	02001400T000	JOINT BOARD STUD BOLT M4*L10	4
R3031	09000700B000	Ballast	2
R3032	20014ET-A001	Lamp Socket	4
R3033	GP-009003-00	Lamp Socket Fixed Plate	4
R3034	20009EL-B001	LAMP (32W)	2
R3035	25022EL-UK01	To Adjusting Plate (4Ht-22)	6
R3036	25053EL-UK06	Cable (25-53)	1
R3037	02105000E040	Cable(Ce4Ht-50)	1
R3038	02105700U060	Cable (Sh-57-4)	1
R3039	02105600U060	Cable (Sh-56-4)	1
R3040	02106000U060	Cable (Sh-60-4)	1

Ref. No	Part No.	Part Names	Q'ty
R3041	03-0000-HB11	Thread Control Joint Board	1
R3042	02105900U000	Sh-59	1

R4 Sub Control Unit & Lamp(UH1506C)

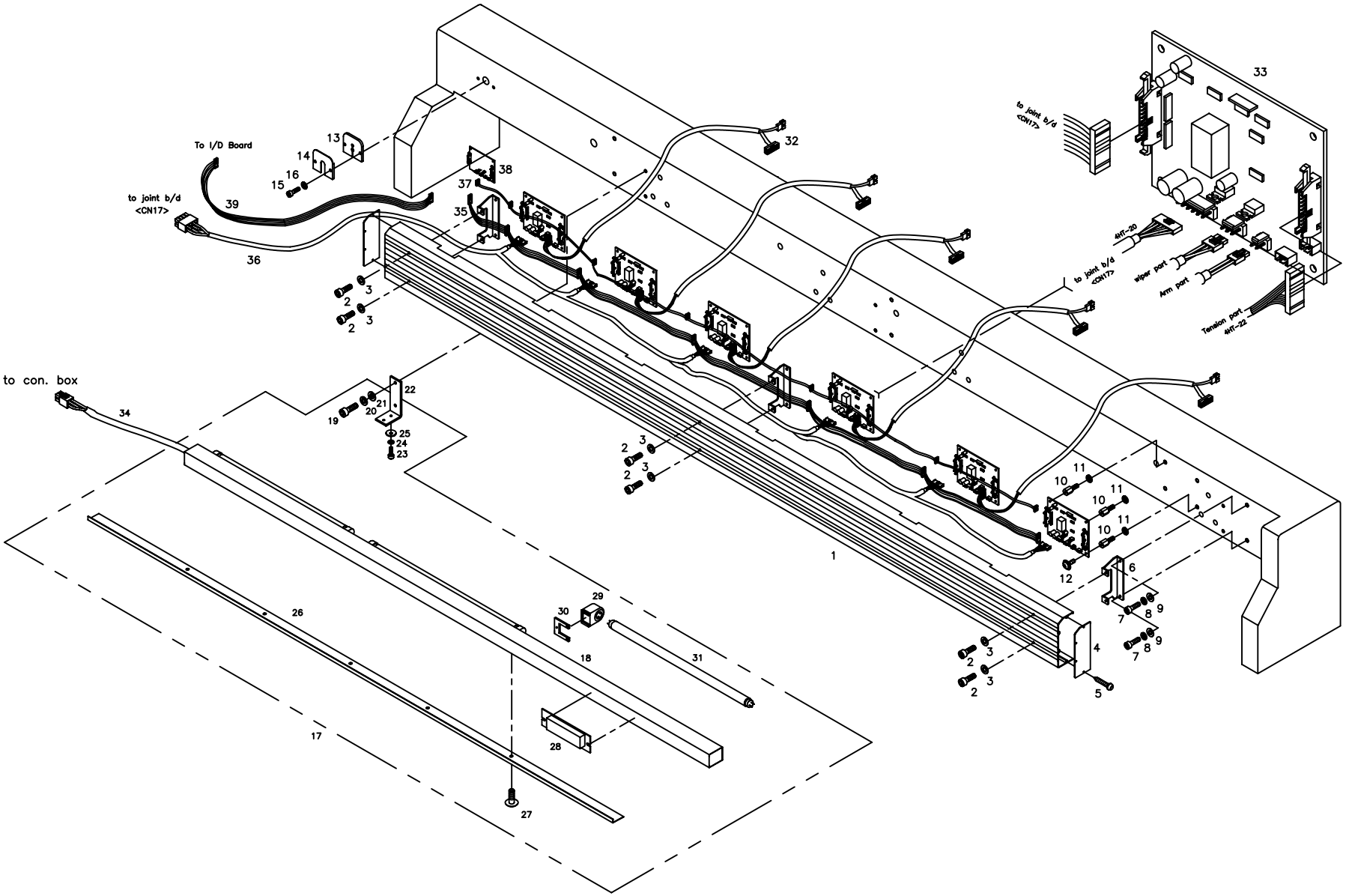

Ref.No	Part No.	Part Names	Q'ty
R4001	09000720UH00	CABLE COVER L=2710	1
R4002	02031SC-7113	Hex. Socket Screw(M5*L10)	6
R4003	18049SW-3111	Washer (@5)	6
R4004	12000200B000	CABLE COVER PLATE	2
R4005	02065SC-3328	Tapping Screw (M3*L10)	8
R4006	02000400B000	CABLE COVER HOLDER	3
R4007	08076SC-7113	Hex. Socket Bolt (M5*L12)	6
R4008	18048SW-3115	Spring Washer (@5)	6
R4009	16018SW-1111	Washer (@5)	6
R4010	11049SC-A001	Board Stud Bolt	28
R4011	18048SW-3115	Spring Washer (@5)	28
R4012	18154SC-9134	PLUS SCREW (M3*L8)	24
R4013	02054RB-UK01	Clamp Rubber	1
R4014	02053PR-UK01	Cable Clamp	1
R4015	18013AF-7113	Hex. Socket Bolt (M4*L10)	2
R4016	18049SW-3111	Washer (@5)	2
R4017	AS-001825-00	Lamp Ass'Y	1
R4019	08091SC-7113	Hex. Socket Bolt (M6*L20)	6
R4020	16014SW-4115	Spring Washer (@6)	6
R4021	08057SW-1111	Washer (@6)	6
R4022	11000100U000	LAMP BRACKET	3
R4023	14014SC-7113	Hex.Socket Set Screw(M5*L8)	6
R4024	18048SW-3115	Spring Washer (@5)	6
R4025	20038PR-T121	Washer (@8)	6
R4026	32029PR-UK01	Reflecting Cover	1
R4027	02010SC-3123	Truss Screw (M4*L8)	5
R4028	09000700U000	Ballast (20W)	3
R4029	20014ET-A001	Lamp Socket	6
R4030	GP-009003-00	LAMP Socket Fixed Plate	3
R4031	32020EL-UK01	PLUS SCREW (M3*L8)	3
R4032	25022EL-UK01	To Adjusting Plate (4Ht-22)	1
R4033	11093EL-C001	SUB-CONTROL BOARD	6
R4034	02105000E040	Cable(Ce4Ht-50)	1
R4035	02105700UH60	Cable (Sh-57-3)	1
R4036	02105600UH60	Cable (Sh-56-3)	1
R4037	02106000UH60	Cable (Sh-60-3)	1
R4038	03-0000-HB11	Thread Control Joint Board	1
R4039	02105900U000	Sh-59	1

Ref. No	Part No.	Part Names	Q'ty

R5 Sub-Control Unit & Lamp(UH1508)

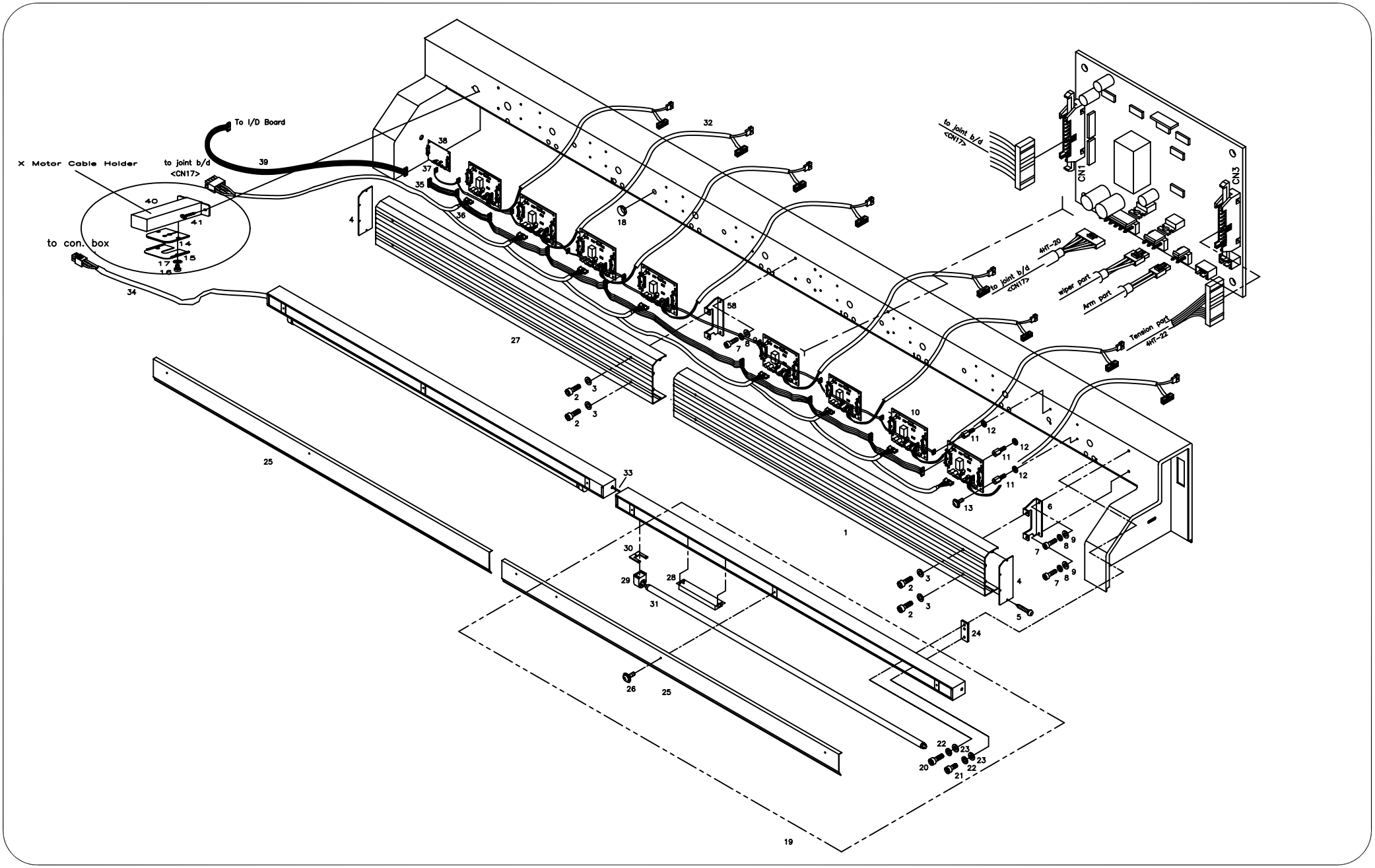

Ref.No	Part No.	Part Names	Q'ty
R5001	09000700UH80	Cable Cover	2
R5002	02031SC-7113	Hex. Socket Screw(M5*L10)	8
R5003	18049SW-3111	Washer (@5)	8
R5004	12000200B000	CABLE COVER PLATE	2
R5005	02065SC-3328	Tapping Screw (M3*L10)	8
R5006	02000400B000	CABLE COVER HOLDER	4
R5007	08076SC-7113	Hex. Socket Bolt (M5*L12)	8
R5008	18048SW-3115	Spring Washer (@5)	8
R5009	16018SW-1111	Washer (@5)	8
R5010	11093EL-C001	Thread Sensing Board	8
R5011	11049SC-A001	Board Stud Bolt	24
R5012	18048SW-3115	Spring Washer (@5)	28
R5013	18154SC-9134	PLUS SCREW (M3*L8)	32
R5014	02054RB-UK01	Clamp Rubber	1
R5015	02053PR-UK01	Cable Clamp	1
R5016	18013AF-7113	Hex. Socket Bolt (M4*L10)	2
R5017	18049SW-3111	Washer (@5)	2
R5018	02017PM-A001	Cable Ring	7
R5019	20000BM-A001	Lamp Ass'Y (Set)	2
R5020	03016SC-4113	Hex. Socket Bolt (M5*L15)	8
R5021	02031SC-7113	Hex. Socket Screw(M5*L10)	4
R5022	18048SW-3115	Spring Washer (@5)	12
R5023	16018SW-1111	Washer (@5)	12
R5024	20001PR-A001	Lamp Ass'Y Connecter	4
R5025	20009PR-A001	Reflecting	2
R5026	02010AF-3123	Truss Screw (M4*L8)	6
R5027	09000600UH80	Cable Cover	1
R5028	20016EL-A001	Ballast	2
R5029	20014ET-A001	Lamp Socket	4
R5030	20012PR-A001	Lamp Socket Fixed Plate	4
R5031	20009EL-B001	LAMP (32W)	2
R5032	25022EL-UK01	To Adjusting Plate (4Ht-22)	6
R5033	25053EL-UK06	Cable (25-53)	1
R5034	02105000E040	Cable	1
R5035	02105700UH80	Cable (Sh-57-5)	1
R5036	02105600UH80	Cable (Sh-56-5)	1
R5037	02106000UH80	Cable (Sh-60-5)	1
R5038	03-0000-HB11	Color Change Board	1
R5039	02105900U000	Sh-59	1
R5040	03202000UH80	X-Moter Cable Holder	1

Ref. No	Part No.	Part Names	Q'ty
R5041	08076SC-7113	Hex. Socket Bolt	2

S

Main Controller

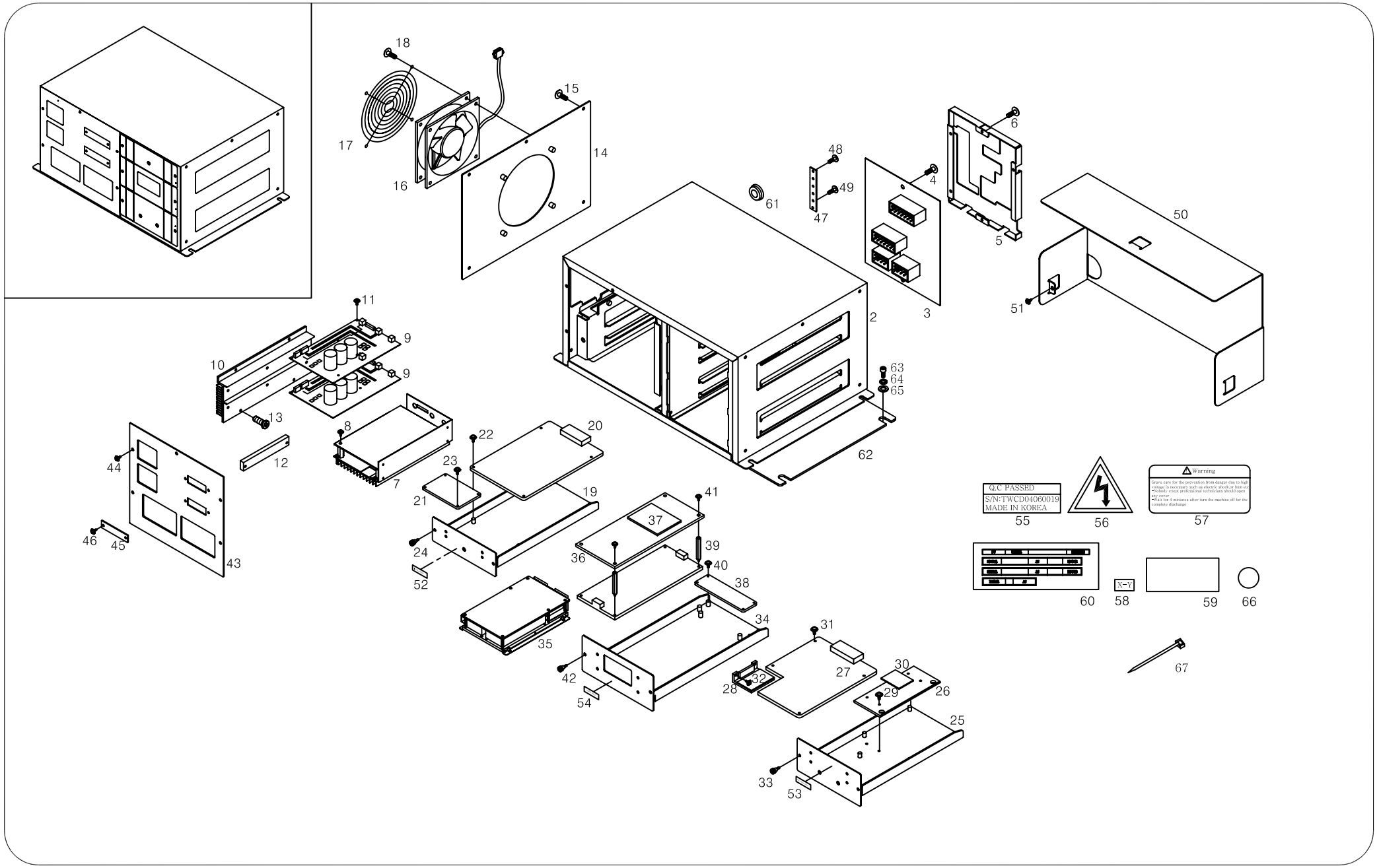

Ref.No	Part No.	Part Names	Q'ty
S-001	SWF-00000461	Control Box Assy(220V용)//SWF-00000457(110V용)	1
S-002	GP-016016-00	Cotrol Box	1
S-003	BD-000389-00	Back plane Board	1
S-004	07-004S-SM5S	Back plane Board Screw (Set) (M4xL10)	1
S-005	GP-016012-00	Connector PCB Cover	1
S-006	07-004S-SM5S	Connector PCB Cover Screw (set) (M4xL10)	4
S-007	BD-000311-00	Main Drive (ASSY)(220V용)//BD-000312-00(110V용)	1
S-008	07-004S-SM5S	Main Drive Assy Screw (set) (M4xL10)	2
S-009	BD-000044-00	X-Y Driver Board(220V용)//BD-000146-00(110V용)	2
S-010	GP-015921-00	Driver Radiator	1
S-011	05008AF-4113	X-Y Driver Board Screw (set) (M4xL16)	6
S-012	05-002S-SW70	PCB Guide (TRCG-3300)	4
S-013	07-004S-SM5S	Driver Radiator Screw(set) (M4xL10)	4
S-014	GP-016015-00	Side Cover	1
S-015	10-003M-PT01	Side Cover Screw (M4xL8)	5
S-016	01-002A-AT01	COOLING FAN	1
S-017	01-002B-AU12	FAN Cover	1
S-018	01-002M-AU12	FAN Screw (M4xL35)	4
S-019	GP-016008-00	IO MC Bracket	1
S-020	BD-000306-00	IO MC Board	1
S-021	BD-000423-00	IO LED Board	1
S-022	10-028S-SC53	IO MC Board Screw (M3xL7)	4
S-023	10-028S-SC53	IO LED Board Screw(set) (M3xL7)	4
S-024	SC-000406-00	IO MC Bracket Screw(캠티브)	2
S-025	GP-016007-00	DDC Bracket	1
S-026	GP-017703-00	DDC Radiator	1
S-027	BD-000387-00	DDC Board	1
S-028	EP-000149-00	Wiper Motor Driver	1
S-029	10-028S-SC53	DDC Radiator Screw(set) (M3xL7)	4
S-030	GP-015654.00	DDC Radiator Sheet	1
S-031	10-028S-SC53	DDC Board Screw(set) (M3xL7)	4
S-032	10-028S-SC53	Wiper Motor Drive Screw(set) (M3xL7)	2
S-033	SC-000406-00	DDC Bracket Screw(캠티브)	2
S-034	GP-016009-00	SMPS Bracket	1
S-035	EP-000029-00	SMPS	1
S-036	GP-015653,00	SMPS Radiator	1
S-037	GP-012118,00	SMPS Radiator Sheet	1
S-038	BD-000392-00	UNIT Board	1
S-039	GP-010543,01	SMPS Fixing Stud (3-5-45)	4
S-040	10-028S-SC53	UNIT Board Screw(set) (M3xL7)	4

Ref. No	Part No.	Part Names	Q'ty
S-041	07-005S-SM5S	SMPS Radiator Screw(set)	4
S-042	SC-000406-00	SMPS Bracket Screw(캠티브)	2
S-043	GP-016011-00	Front Cover (L)	1
S-044	10-003M-PT01	Front Cover(L) Screw (M4xL8)	5
S-045	02-001B-SW67	Switch Cover	2
S-046	13054SC-3123	Switch Cover Screw(set) (M3xL8)	4
S-047	10-005A-DU33	Earth Plate	1
S-048	07-004S-SM5S	Earth Plate Screw(set) (M4xL10)	2
S-049	01-037S-2070	Earth Screw (M4xL8)	4
S-050	GP-016014,00	Harness Cover	1
S-051	07-004S-SM5S	Harness Cover Screw(set)	3
S-052	GP-014549,00	IO MC Sticker	1
S-053	GP-014548,00	DDC Sticker	1
S-054	GP-014550,00	SMPS Sticker	1
S-055	09-023C-SC53	QC Passed Sticker	1
S-056	04-003S-AU10	Warning Sticker	1
S-057	04-004S-AU10	Warning Sticker	1
S-058	04-001S-AU10	X.Y Sticker	2
S-059	04-002S-AU10	Current Setting Sticker	1
S-060	GP-017710-00	Signal Sticker	1
S-061	09-025R-SC53	Rubber Din Cap	1
S-062	GP-017171,00	Rubeer	2
S-063	18047SC-7113	Control Box Screw (M5xL15)	4
S-064	16019SW-4115	Control Box Spring Washer	4
S-065	16018SW-1111	Control Box Washer	4
S-066	09-012S-CE53	Earth Sticker	1
S-067	15-025M-1000	Cable tie	

T

Operation Unit

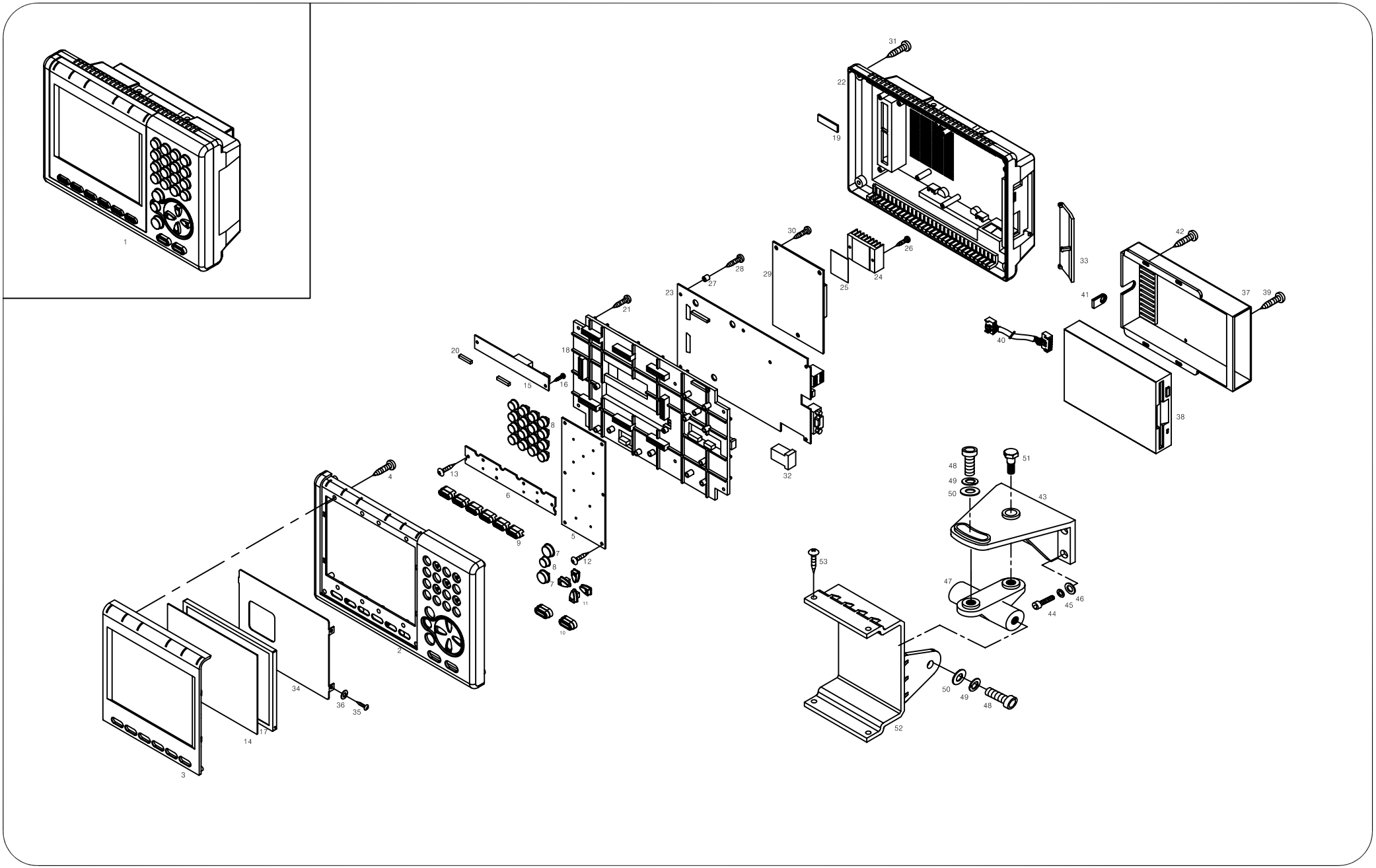

Ref.No	Part No.	Part Names		Q'ty
T-001	SWF-00000467	Operation Box (組)		1
T-002	GP-017473,01	Front Cover		1
T-003	GP-018278,01	Front Cover Widow		1
T-004	SC-000575,00	Screw	(ST2.9xL6)	10
T-005	BD-000419-00	KEY Board (A)		1
T-006	BD-000420-00	KEY Board (B)		1
T-007	GP-017478,00	Button (A)		17
T-008	GP-017479,00	Button (B)		2
T-009	GP-017480,01	Button (C)		6
T-010	GP-017481,00	Button (D)		2
T-011	GP-017482,00	Button (E)		4
T-012	SC-000459.00	Screw for KEY Board (A)	(ST2.9xL8)	6
T-013	SC-000459.00	Screw for KEY Board (B)	(ST2.9xL8)	6
T-014	GP-017475,00	LCD Cover		1
T-015	EP-000130-00	LCD Inverter		1
T-016	SC-000459.00	LCD Inverter Screw	(ST2.9xL8)	2
T-017	EP-000129-00	LCD		1
T-018	GP-017477,01	Base Plate		1
T-019	20-002B-SW70	Presser Sponge		1
T-020	GP-017483,00	LCD Presser Sponge		8
T-021	SC-000474.00	Screw	(ST2.9xL12)	6
T-022	GP-017474,00	Rear Cover		1
T-023	BD-000380-00	BASE Board		
T-024	GP-015792,00	DDC Radiator		1
T-025	GP-009032,00	DDC Radiator Sheet		1
T-026	10-028S-SC53	Screw Set	(M3xL7)	2
T-027	10-001C-AT10	BASE Board Bushing		6
T-028	SC-000474.00	Screw	(ST2.9xL12)	6
T-029	BD-000379-00	CPU Board		
T-030	SC-000459.00	Screw	(ST2.9xL8)	3
T-031	SC-000601,00	Screw	(ST4xL12)	4
T-032	01-003B-SW63	DOOR LOCK		1
T-033	GP-017476,00	Connector Cover		1
T-034	GP-019016,00	LCD Bracket		1
T-035	20-001C-SW70	Screw	(M2×L6)	4
T-036	20-001W-SW70	Spring Washer	(@2)	4
T-037	GP-014441,01	FDD Box		1
T-038	EP-000074-00	FDD		1
T-039	10-004M-SW66	Screw	(M3xL8)	2
T-040	CA-001088-00	FDD Connecting Cable		1

Ref. No	Part No.	Part Names		Q'ty
T-041	GP-014442,01	Cable Fixing Rubber		1
T-042	01-001S-NET1	Screw	(M3×L6)	4
T-043	GP-017311,01	OP Holder		1
T-044	15030SC-7113	Screw	(M5xL30)	4
T-045	18048SW-3115	Spring Washer	(Ø5)	4
T-046	16018SW-1111	Washer	(Ø5)	4
T-047	GP-018416,00	Hinge Block		1
T-048	08091SC-7113	Screw	(M6xL20)	3
T-049	16014SW-4115	Spring Washer	(Ø6)	3
T-050	08057SW-1111	Washer	(Ø6)	3
T-051	19006CW-CT01	Hinge Bolt		1
T-052	GP-017967,00	OP Holder Bracket		1
T-053	SC-000544,00	Screw	(M5xL12)	4
				1

U

Bobbin Winder

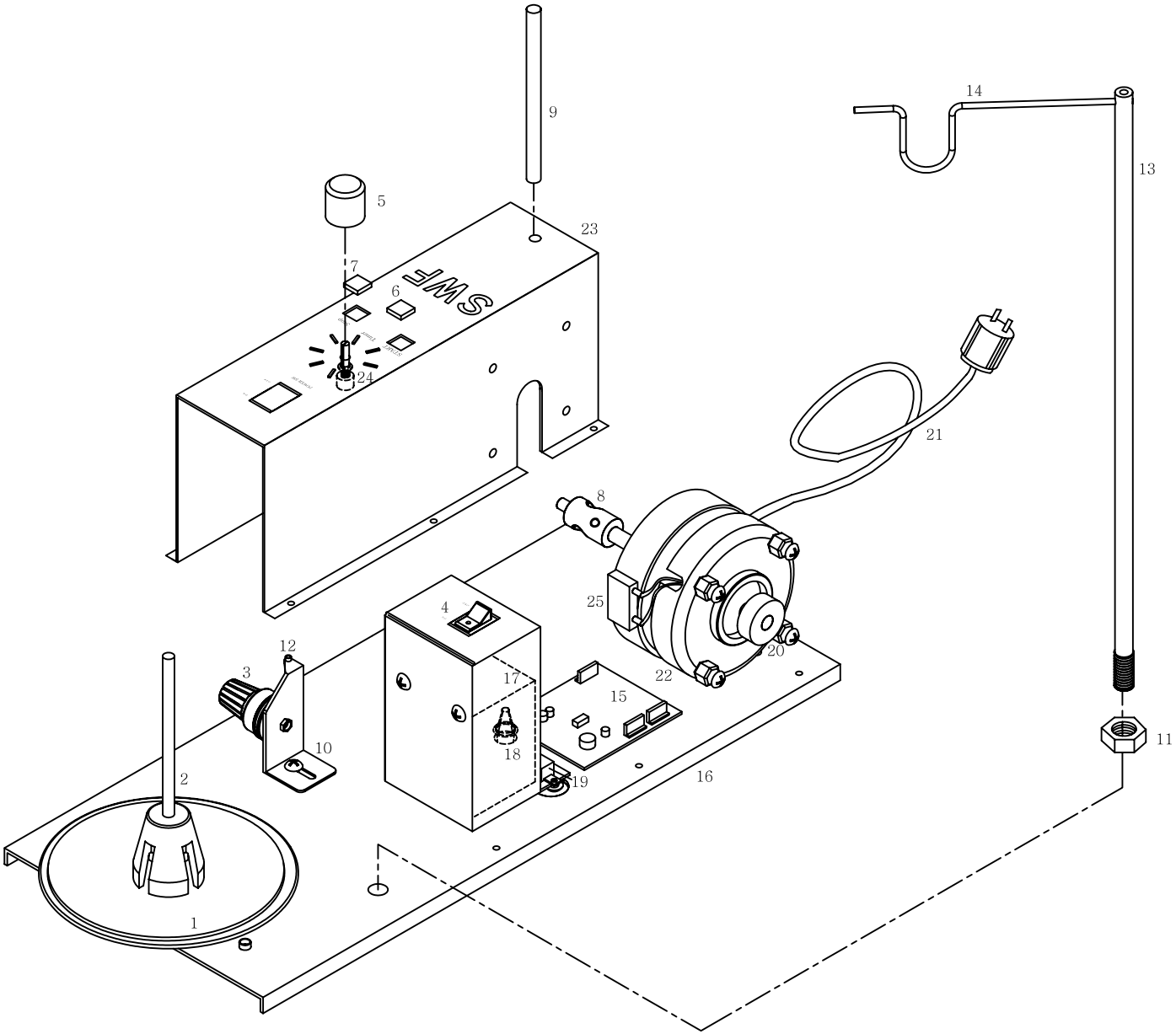

Ref.No	Part No.	Part Names	Q'ty
U-001	23002BM-B001	Bobbin Winder	1
U-002	23005BM-B001	Spool Post	1
U-003	23008BM-B001	Tension Adjusting Set	1
U-004	23001EL-B001	ON/OFF SWITCH	1
U-005	23002EL-B001	Timer	1
U-006	23003EL-B001	Start Switch	1
U-007	23004EL-B001	Stop Switch	1
U-008	23009CW-B001	Bobbin Shaft	1
U-009	02026SC-A001	Bobbin Stand	1
U-010	23019PR-B001	Tension Adjustment Holder	1
U-011	23043SN-B001	Antenna Bar Nut	1
U-012	23044CN-B001	Ceramic Ring	1
U-013	23007SH-B001	Antenna Bar	1
U-014	23006SH-B001	Antenna Bar Hanger	1
U-015	23010EL-B001	Control Board	1
U-016	23023ET-A001	Base	1
U-017	23014EL-B001	Transformer	1
U-018	23012EL-B001	Fuse Box	1
U-019	23025ET-B001	Transformation Switch	1
U-020	23005PU-A001	Aluminium Ring	1
U-021	23045ET-B001	AC Cord	1
U-022	23015MT-B001	Motor	1
U-023	230209R-A001	Cover	1
U-024	23027ET-B001	Variable Resistance	1
U-025	23028ET-B001	Condenser	1

Ref. No	Part No.	Part Names	Q'ty