PARTS BOOK

Dual Function
Automatic Embroidery Machine

SWF®

PME-080201

SUNSTAR PRECISION CO., LTD.

Machine Layout

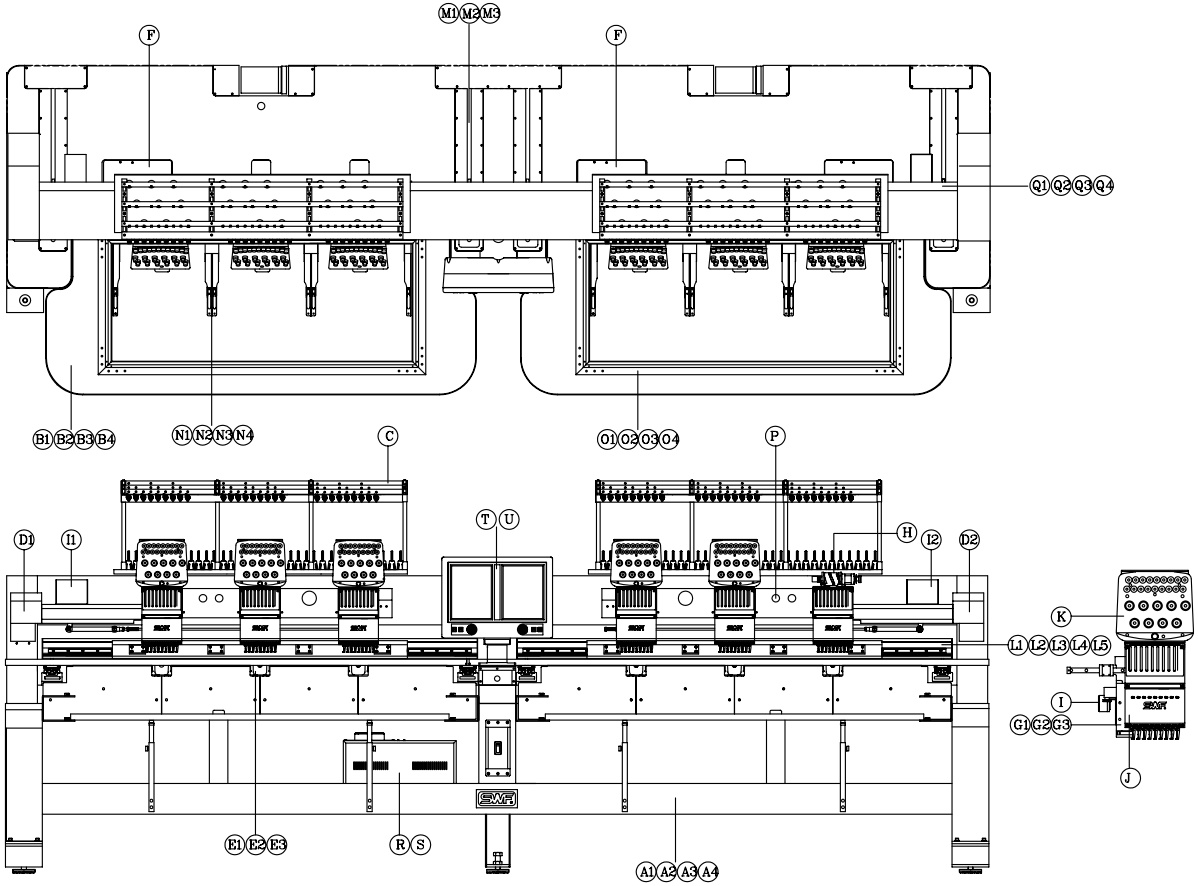

A1 Machine Body Ass'y(UH1504D)
A2 Machine Body Ass'y(UH1506D)
A3 Machine Body Ass'y(UH1208D)
A4 Machine Body Ass'y(UH1512D)
B1 Work Table(UH1504D)
B2 Work Table(UH1506D)
B3 Work Table(UH1208D)
B4 Work Table(UH1512D)
C Spool Stand
D1 Main Drive System I
D2 Main Drive System II
E1 Bed I
E2 Bed II
E3 Bed III(UH1208D)
F Thread Cutting Drive System
G1 Arm I
G2 Arm II
G3 Arm III
H Color Change Set
I1 Wiper Set I
I2 Wiper Set II
J Head
K Thread Tension Unit
L1 X-Axis Drive System(UH1504D)
L2 X-Axis Drive System I(UH1506D)
L3 X-Axis Drive System II(UH1506D)
L4 X-Axis Drive System(UH1208D)
L5 X-Axis Drive System(UH1512D)
M1 Y-Axis Drive System(UH1504D)
M2 Y-Axis Drive System(UH1506D)
M3 Y-Axis Drive System(UH1208D,UH1512D)
N1 Tubular Frame(UH1504D)
N2 Tubular Frame(UH1506D)
N3 Tubular Frame(UH1508D)
N4 Tubular Frame(UH1512D)
O1 Boder Frame(UH1504D)
O2 Boder Frame(UH1506D)
O3 Boder Frame(UH1208D)
O4 Boder Frame(UH1512D)
P S/B Switch Unit
Q1 Sub Control Unit & Lamp(UH1504D)
Q2 Sub Control Unit & Lamp(UH1506D)
Q3 Sub Control Unit & Lamp(UH1208D)
Q4 Sub Control Unit & Lamp(UH1512D)
R Control Box
S Cable
T Operation Box
U Cable
V Bobbin Winder

SWF®

CONTENT

A1	Machine Body Ass' y (UH1504D)	7
A2	Machine Body Ass' y (UH1506D)	9
A3	Machine Body Ass' y (UH1208D)	11
A4	Machine Body Ass' y (UH1512D)	13
B1	Work Table (UH1504D)	15
B2	Work Table (UH1506D)	19
B3	Work Table (UH1208D)	21
B4	Work Table (UH1512D)	25
C	Spool Stand	29
D1	Main Drive System Ⅰ	31
D2	Main Drive System Ⅱ	35
E1	Bed Ⅰ	39
E2	Bed Ⅱ	41
E3	Bed Ⅲ (UH1208D, UH1512D)	43
F	Thread Cutting Drive System	45
G1	Arm Ⅰ	47
G2	Arm Ⅱ	51
G3	Arm Ⅲ	53
H	Color Change Set	55
I1	Wiper Set Ⅰ	57
I2	Wiper Set Ⅱ	61
J	Head	65
K	Thread Tension Unit	69
L1	X-Axis Drive System (UH1504D)	71
L2	X-Axis Drive Set (UH1506D)	73

1. 조에 속한 파트는 개별 조립 시 제품의 파손 또는 재봉 불량이 발생될 수 있어 해당 파트에 대한 주문 시에는 조 품목으로만 구입이 가능합니다.
2. 본 책자는Parts Book으로 제작되었으므로 매뉴얼로 사용 불가합니다.

1. The parts classified as ass'y items may cause damage to the machine or bad sewing when they are separately assembled.
   Hence, when they are ordered, they can be purchased as ass'y items only.
2. This is a parts book. It cannot be used as a manual.

SWF®

CONTENT

L3	X-Axis Drive System (UH1208D)	81
L4	X-Axis Drive System (UH1208D)	83
L5	X-Axis Drive System (UH1512D)	85
M1	Y-Axis Drive System (UH1504D)	89
M2	Y-Axis Drive System (UH1506D, UH1508D)	91
M3	Y-Axis Drive System (UH1512D)	95
N1	Tubular Frame (UH1504D)	101
N2	Tubular Frame (UH1506D)	103
N3	Tubular Frame (UH1208D)	105
N4	Tubular Frame (UH1512D)	107
O1	Border Frame (UH1504D)	109
O2	Border Frame (UH1506D)	111
O3	Border Frame (UH1208D)	113
O4	Border Frame (UH1512D)	115
P	S/B Switch Unit	117
Q1	Sub-Control Unit & Lamp (UH1504D)	119
Q2	Sub-Control Unit & Lamp (UH1506D)	121
Q3	Sub-Control Unit & Lamp (UH1208D)	123
Q4	Sub-Control Unit & Lamp (UH1512D)	125
R	Main Controller	127
S	Main Controller Cable	129
T	Operation Unit	131
U	Operation Unit Cable	135
V	Bobbin Winder	137

A1 Machine Body Ass'y (UH1504D)

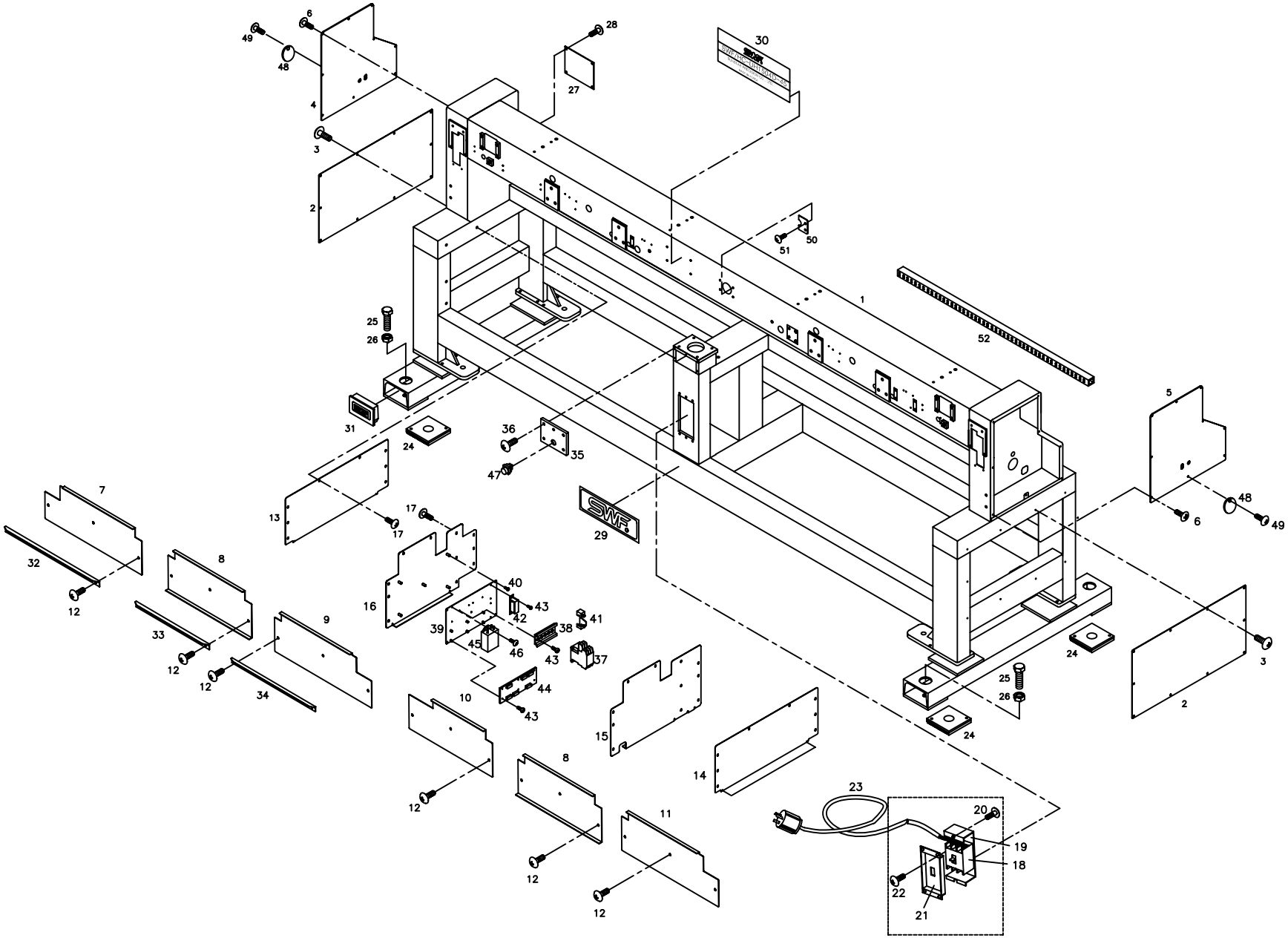

Ref.No	Part No.	Part Names	Q'ty
A1001	GP-004863-03	BEAMBODY SET HC-UH1504D-45	1
A1002	02066PR-UK01	BODY SIDE COVER	2
A1003	02044SC-3123	TRUSS SCREW (M5*L8)	16
A1004	01000300UH61	BEAM BRACKET COVER (L)	1
A1005	01000400UH61	BEAM BRACKET COVER (R)	1
A1006	02044SC-3123	TRUSS SCREW (M5*L8)	16
A1007	GP-005001-00	BODY FRONT COVER A	1
A1008	GP-005002-00	BODY FRONT COVER B	2
A1009	GP-005003-00	BODY FRONT COVER C	1
A1010	GP-005004-00	BODY FRONT COVER D	1
A1011	GP-005005-00	BODY FRONT COVER E	1
A1012	02031SC-4113	HEX. SOCKET SCREW(M5*L10)	18
A1013	GP-007851-00	BODY INSIDE COVER A	1
A1014	GP-007852-01	BODY INSIDE COVER B	1
A1015	GP-004999-01	BODY INSIDE COVER C	1
A1016	GP-005000-03	BODY INSIDE COVER D	1
A1017	02044SC-3123	TRUSS SCREW (M5*L8)	48
A1018	29001EL-A001	MAIN POWER S/W (ABE53BF-30A)	1
A1019	02037PR-A001	MAIN POWER S/W BRACKET	1
A1020	02038SC-9131	PLUS SCREW (M5*L10)	2
A1021	02043PR-A001	MAIN POWER S/W COVER	1
A1022	02044SC-3123	TRUSS SCREW (M5*L8)	4
A1023	02100100UH60	MAIN CALBE	1
A1024	GP-010074-00	LEVELING BASE ASS'Y	6
A1025	01004SC-UK01	HEX. BOLT (M20*L60)	6
A1026	02036SN-1211	HEX. NUT (M20-NO2)	6
A1027	02097ET-B001	MODEL NAME PLATE	1
A1028	02010SC-3123	TRUSS SCREW (M4*L8)	4
A1029	02101ET-UK01	BRAND MARK	1
A1030	08000205UH41	Model Mark	1
A1031	02043RB-W121	BODY SUPPORT RUBBER CAP	4
A1032	GP-005028-00	TABLE SUPPORT A	2
A1033	05001400UH80	TABLE SUPPORT ANGLE B L399	2
A1034	GP-005029-00	TABLE SUPPORT C	2
A1035	01003200UH60	BRACKET FOR I/O S/W	1
A1036	02044SC-3123	TRUSS SCREW (M5*L8)	5
A1037	02000100T000	MAGNETIC SWITCH SET	2
A1038	02000910T000	MAGNETIC S/W FIXED BRACKET	2
A1039	09000600UH60	M/C STARTING BRACKET	2
A1040	02010SC-3123	TRUSS SCREW (M4*L8)	5

Ref. No	Part No.	Part Names	Q'ty
A1041	02001300T000	BRACKET STOPPER (CE)	4
A1042	05000210T000	TRANSFORMER (EMT25V) 1A/25.5V	2
A1043	02010SC-3123	TRUSS SCREW (M4*L8)	16
A1044	21-0000-DU33	MS BOARD	1
A1045	GP-007476-00	Noise Filter	1
A1046	20042SC-9134	PLUS SCREW (M4*L6)	2
A1047	02000700T000	Push B/T Switch	1
A1048	02054PR-A001	MAIN MOTOR PULLEY COVER	1
A1049	02044SC-3123	TRUSS SCREW (M5*L8)	1
A1050	GP-005982-00	CABLE COVER FOR OP SUPPORT	2
A1051	02044SC-3123	TRUSS SCREW (M5*L8)	4
A1052	DU-000001-00	DUCT(L=654)	1

A2

Machine Body Ass'y (UH1506D)

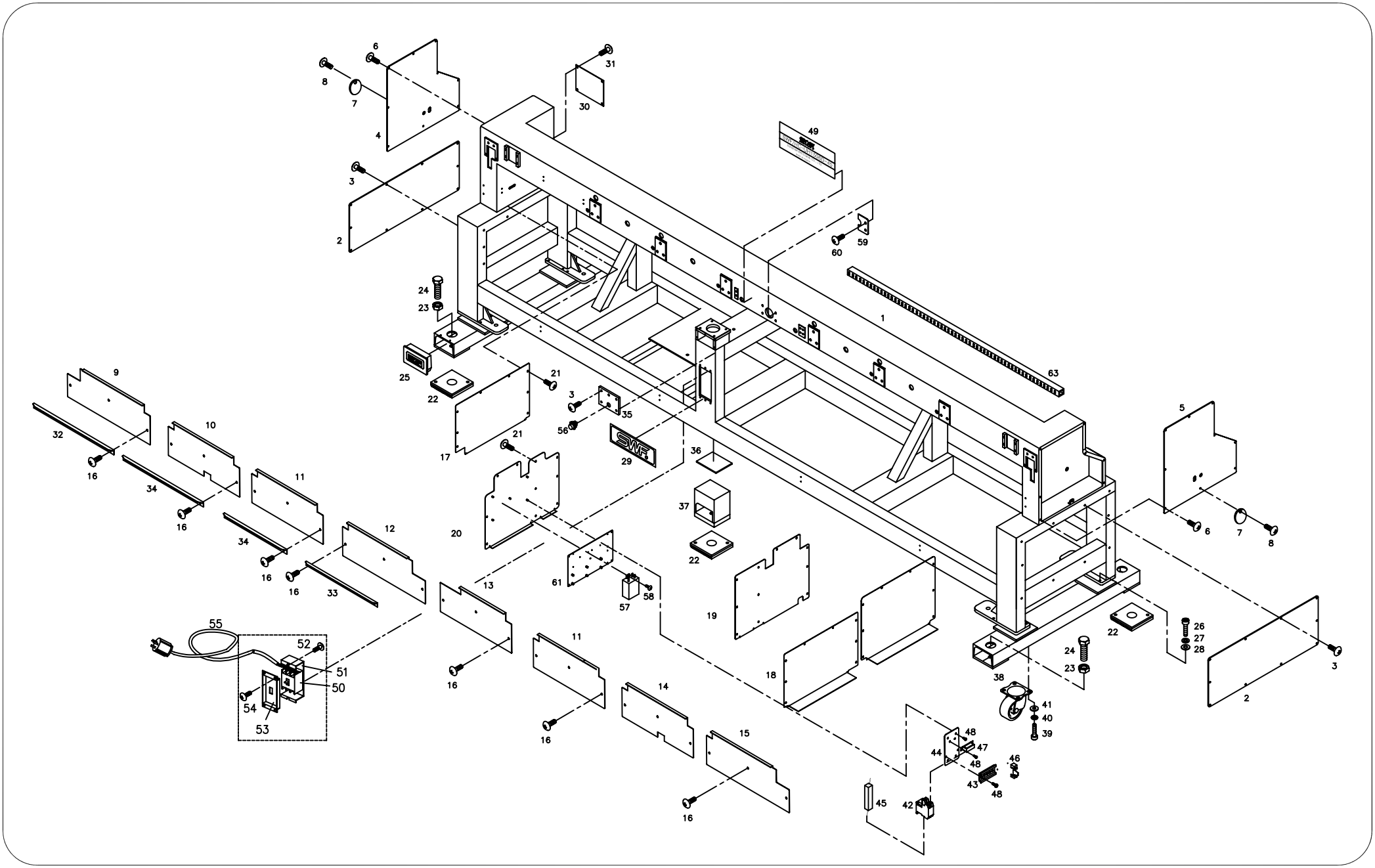

Ref.No	Part No.	Part Names	Q'ty
A2001	GP-006746-05	BODY HC-UH1506D-45	1
A2002	GP-008790-00	BODY SIDE COVER	2
A2003	02044SC-3123	TRUSS SCREW (M5*L8)	20
A2004	01000300UH61	BEAM BRACKET COVER (L)	1
A2005	01000400UH61	BEAM BRACKET COVER (R)	1
A2006	02044SC-3123	TRUSS SCREW (M5*L8)	18
A2007	02054PR-A001	MAIN MOTOR PULLEY COVER	1
A2008	02044SC-3123	TRUSS SCREW (M5*L8)	1
A2009	01000500UH61	BODY FRONT COVER A	1
A2010	01000600UH61	BODY FRONT COVER B	1
A2011	09000900UH80	BODY FRONT COVER C	2
A2012	GP-004110-00	BODY FRONT COVER D	1
A2013	GP-004111-00	BODY FRONT COVER E	1
A2014	01001000UH61	BODY FRONT COVER F	1
A2015	01001100UH61	BODY FRONT COVER G	1
A2016	02044SC-3123	TRUSS SCREW (M5*L8)	24
A2017	GP-010549-01	BODY INSIDE COVER A	1
A2018	GP-007852-01	BODY INSIDE COVER B	1
A2019	GP-005688-01	BODY INSIDE COVER C	1
A2020	GP-010550-01	BODY INSIDE COVER D	1
A2021	02044SC-3123	TRUSS SCREW (M5*L8)	40
A2022	GP-010074-00	LEVELING BASE ASS'Y	6
A2023	01004SC-UK01	HEX. BOLT (M20*L60)	6
A2024	02036SN-1211	HEX. NUT (M20-NO2)	6
A2025	02043RB-W121	BODY SUPPORT RUBBER CAP	6
A2026	14003SC-4113	HEX. SOCKET BOLT (M8*L20)	16
A2027	15095SW-3115	SPRING WASHER (@8)	16
A2028	08041SW-1111	WASHER (@8-S)	16
A2029	02101ET-UK01	BRAND MARK	1
A2030	02097ET-B001	MODEL NAME PLATE	1
A2031	02010SC-3123	TRUSS SCREW (M4*L8)	4
A2032	01002900UH60	TABLE SUPPORT (A)	2
A2033	GP-004115-00	TABLE SUPPORT (C)	2
A2034	05001400UH80	TABLE SUPPORT ANGLE B L399	4
A2035	GP-010770-00	Bracket For I/O s/w(A)	1
A2036	01002700UH60	Rubber For Body Support	2
A2037	01002800UH60	Body Support	2
A2038	01000100UH80	HAMMER CASTER SET (URETHANE)	4
A2039	14006SC-7113	HEX.SOCKET SET SCREW(M8*L15)	16
A2040	15095SW-3115	SPRING WASHER (@8)	16

Ref. No	Part No.	Part Names	Q'ty
A2041	04029SW-A001	STUD BOLT WASHER(S) (@8)	16
A2042	02000100T000	MAGNETIC SWITCH SET	2
A2043	02000910T000	MAGNETIC S/W FIXED BRACKET	2
A2044	02001100T000	SWITCH PLATE	2
A2045	02001200T000	RESISTER 5/20W (CE)	2
A2046	02001300T000	BRACKET STOPPER (CE)	4
A2047	05000210T000	TRANSFORMER (EMT25V) 1A/25.5V	2
A2048	02010SC-3123	TRUSS SCREW (M4*L8)	16
A2049	08000205UH61	Model Mark	1
A2050	29001EL-A001	MAIN POWER S/W (ABE53BF-30A)	1
A2051	02037PR-A001	MAIN POWER S/W BRACKET	1
A2052	02038SC-9131	PLUS SCREW (M5*L10)	2
A2053	02043PR-A001	MAIN POWER S/W COVER	1
A2054	02044SC-3123	TRUSS SCREW (M5*L8)	4
A2055	02100100UH60	MAIN CALBE	1
A2056	02000700T000	Push B/T Switch	1
A2057	GP-007476-00	Noise Filter	1
A2058	20042SC-9134	PLUS SCREW (M4*L6)	2
A2059	GP-005982-00	CABLE COVER FOR OP SUPPORT	2
A2060	02044SC-3123	TRUSS SCREW (M5*L8)	4
A2061	09000600UH60	M/C STARTING BRACKET	1
A2062	GP-008893-00	BODY INSIDE COVER B	
A2063	DU-000002-00	DUCT(L=933)	1

A3 Machine Body Ass'y (UH1208D)

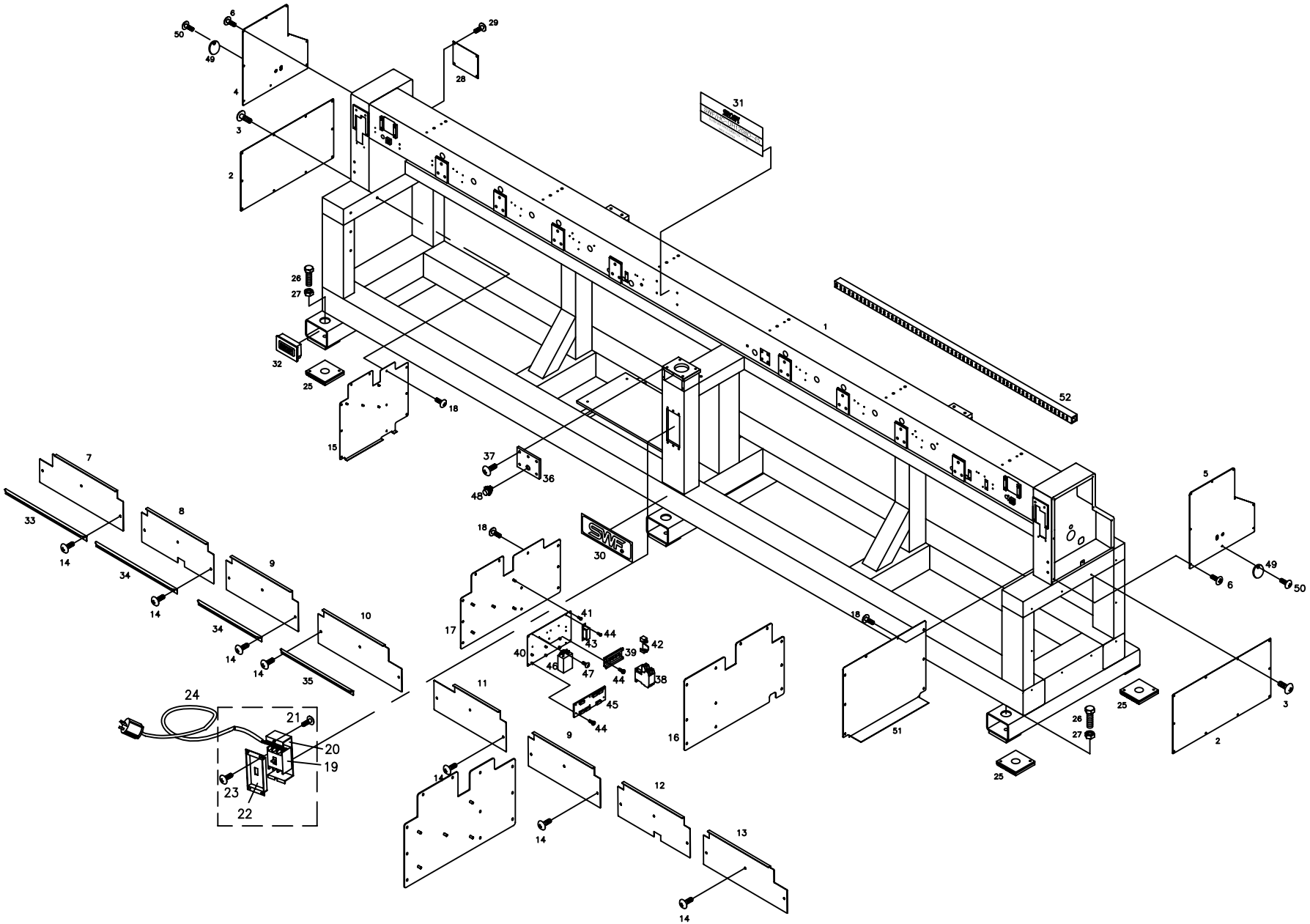

Ref.No	Part No.	Part Names	Q'ty
A3001	GP-004108-06	BEAM&BODY HC-UH1208D-45	1
A3002	GP-004109-01	BODY SIDE COVER	2
A3003	02044SC-3123	TRUSS SCREW (M5*L8)	16
A3004	01000300UH61	BEAM BRACKET COVER (L)	1
A3005	01000400UH61	BEAM BRACKET COVER (R)	1
A3006	02044SC-3123	TRUSS SCREW (M5*L8)	16
A3007	01000500UH61	BODY FRONT COVER A	1
A3008	01000600UH61	BODY FRONT COVER B	1
A3009	09000900UH80	BODY FRONT COVER C	4
A3010	GP-004110-00	BODY FRONT COVER D	1
A3011	GP-004111-00	BODY FRONT COVER E	1
A3012	01001000UH61	BODY FRONT COVER F	1
A3013	01001100UH61	BODY FRONT COVER G	1
A3014	02031SC-4113	HEX. SOCKET SCREW(M5*L10)	24
A3015	GP-004112-02	BODY INSIDE COVER A	1
A3016	GP-004113-02	BODY INSIDE COVER C	1
A3017	GP-004114-02	BODY INSIDE COVER D	1
A3018	02044SC-3123	TRUSS SCREW (M5*L8)	48
A3019	29001EL-A001	MAIN POWER S/W (ABE53BF-30A)	1
A3020	02037PR-A001	MAIN POWER S/W BRACKET	1
A3021	02038SC-9131	PLUS SCREW (M5*L10)	2
A3022	02043PR-A001	MAIN POWER S/W COVER	1
A3023	02044SC-3123	TRUSS SCREW (M5*L8)	4
A3024	02100100UH60	MAIN CALBE	1
A3025	GP-010074-00	LEVELING BASE ASS'Y	6
A3026	01004SC-UK01	HEX. BOLT (M20*L60)	6
A3027	02036SN-1211	HEX. NUT (M20-NO2)	6
A3028	02097ET-B001	MODEL NAME PLATE	1
A3029	02010SC-3123	TRUSS SCREW (M4*L8)	4
A3030	02101ET-UK01	BRAND MARK	1
A3031	08000204UH81	Model Mark	1
A3032	GP-004882-00	BODY SUPPORT RUBBER CAP	6
A3033	01002900UH60	TABLE SUPPORT A	2
A3034	05001400UH80	TABLE SUPPORT ANGLE B L399	2
A3035	GP-004115-00	TABLE SUPPORT C	2
A3036	01003200UH60	BRACKET FOR I/O S/W	1
A3037	02044SC-3123	TRUSS SCREW (M5*L8)	5
A3038	02000100T000	MAGNETIC SWITCH SET	2
A3039	02000910T000	MAGNETIC S/W FIXED BRACKET	2
A3040	09000600UH60	M/C STARTING BRACKET	2

Ref. No	Part No.	Part Names	Q'ty
A3041	02010SC-3123	TRUSS SCREW (M4*L8)	5
A3042	02001300T000	BRACKET STOPPER (CE)	4
A3043	05000210T000	TRANSFORMER (EMT25V) 1A/25.5V	2
A3044	02010SC-3123	TRUSS SCREW (M4*L8)	16
A3045	21-0000-DU33	MS BOARD	1
A3046	GP-007476-00	Noise Filter	1
A3047	20042SC-9134	PLUS SCREW (M4*L6)	2
A3048	02000700T000	Push B/T Switch	1
A3049	02054PR-A001	MAIN MOTOR PULLEY COVER	1
A3050	02044SC-3123	TRUSS SCREW (M5*L8)	1
A3051	GP-008893-00	BODY INSIDE COVER B	1
A3052	DU-000003-00	DUCT	1

A4

Machine Body Ass'y (UH1512D)

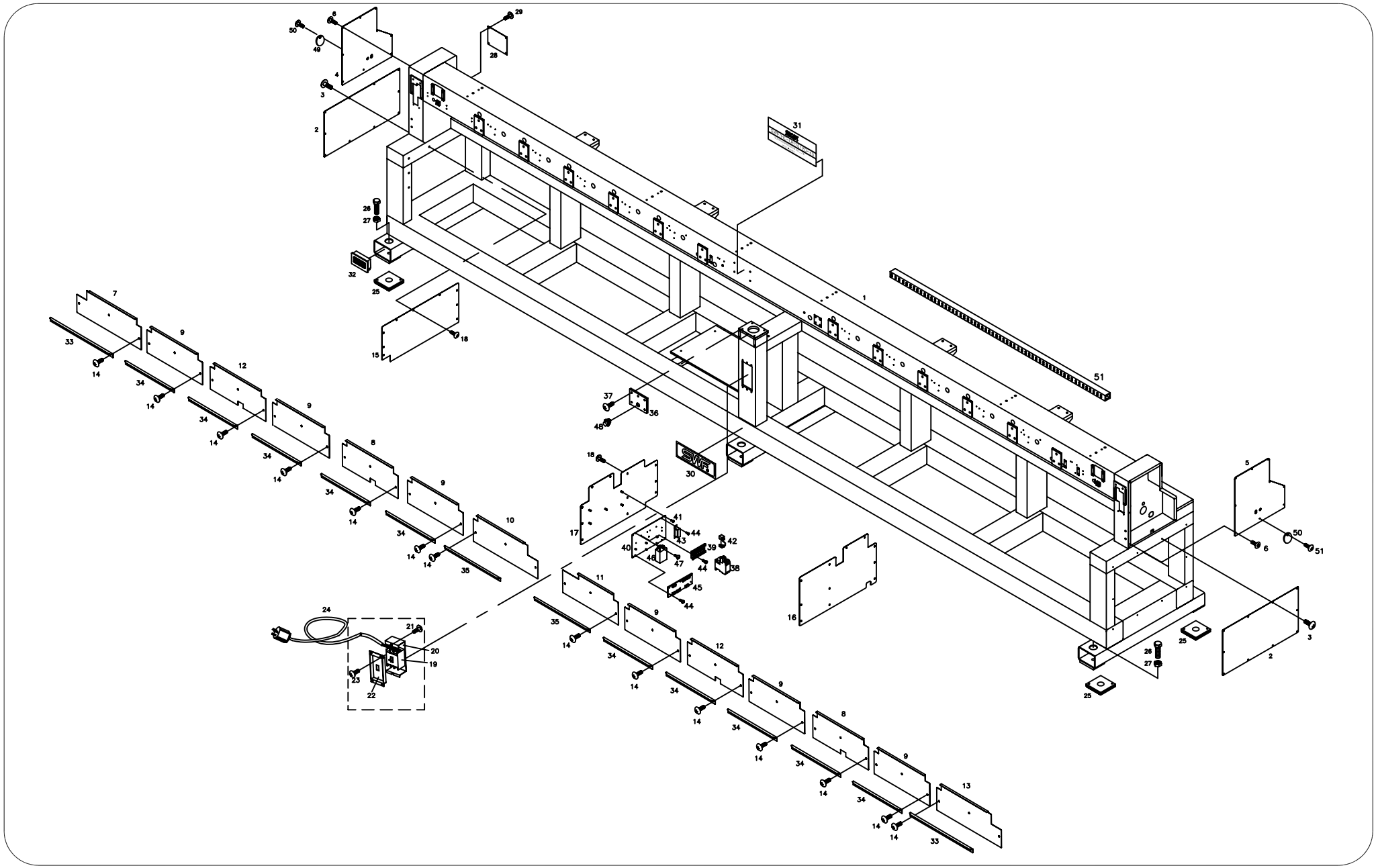

Ref.No	Part No.	Part Names	Q'ty
A4001	GP-005057-06	Beam&BODY SET	1
A4002	GP-008904-00	BODY SIDE COVER	2
A4003	02044SC-3123	TRUSS SCREW (M5*L8)	16
A4004	01000300UH61	BEAM BRACKET COVER (L)	1
A4005	01000400UH61	BEAM BRACKET COVER (R)	1
A4006	02044SC-3123	TRUSS SCREW (M5*L8)	16
A4007	01000500UH61	BODY FRONT COVER A	1
A4008	01000600UH61	BODY FRONT COVER B	2
A4009	01000700UH61	BODY FRONT COVER C	6
A4010	GP-004110-00	BODY FRONT COVER D	1
A4011	GP-004111-00	BODY FRONT COVER E	1
A4012	01001000UH61	BODY FRONT COVER F	2
A4013	01001100UH61	BODY FRONT COVER G	1
A4014	02031SC-4113	HEX. SOCKET SCREW(M5*L10)	24
A4015	GP-010545-01	BODY INSIDE COVER A	2
A4016	GP-008902-00	BODY INSIDE COVER C	1
A4017	GP-010546-01	BODY INSIDE COVER D	1
A4018	02044SC-3123	TRUSS SCREW (M5*L8)	48
A4019	29001EL-A001	MAIN POWER S/W (ABE53BF-30A)	1
A4020	02037PR-A001	MAIN POWER S/W BRACKET	1
A4021	02038SC-9131	PLUS SCREW (M5*L10)	2
A4022	02043PR-A001	MAIN POWER S/W COVER	1
A4023	02044SC-3123	TRUSS SCREW (M5*L8)	4
A4024	02100100UH60	MAIN CALBE	1
A4025	GP-010074-00	LEVELING BASE ASS'Y	6
A4026	01004SC-UK01	HEX. BOLT (M20*L60)	6
A4027	02036SN-1211	HEX. NUT (M20-NO2)	6
A4028	02097ET-B001	MODEL NAME PLATE	1
A4029	02010SC-3123	TRUSS SCREW (M4*L8)	4
A4030	02101ET-UK01	BRAND MARK	1
A4031	08000105UH6C	Model Mark	1
A4032	GP-004882-00	BODY SUPPORT RUBBER CAP	6
A4033	01002900UH60	TABLE SUPPORT A	2
A4034	05001400UH80	TABLE SUPPORT ANGLE B L399	10
A4035	GP-004115-00	TABLE SUPPORT C	2
A4036	01003200UH60	BRACKET FOR I/O S/W	1
A4037	02044SC-3123	TRUSS SCREW (M5*L8)	5
A4038	02000100T000	MAGNETIC SWITCH SET	2
A4039	02000910T000	MAGNETIC S/W FIXED BRACKET	2
A4040	09000600UH60	M/C STARTING BRACKET	2

Ref. No	Part No.	Part Names	Q'ty
A4041	02010SC-3123	TRUSS SCREW (M4*L8)	5
A4042	02001300T000	BRACKET STOPPER (CE)	4
A4043	05000210T000	TRANSFORMER (EMT25V) 1A/25.5V	2
A4044	02010SC-3123	TRUSS SCREW (M4*L8)	16
A4045	21-0000-DU33	MS BOARD	1
A4046	GP-007476-00	Noise Filter	1
A4047	20042SC-9134	PLUS SCREW (M4*L6)	2
A4048	02000700T000	Push B/T Switch	1
A4049	02054PR-A001	MAIN MOTOR PULLEY COVER	1
A4050	02044SC-3123	TRUSS SCREW (M5*L8)	1
A4051	DU-000004-00	DUCT	1

B1 Work Table (UH1504D)

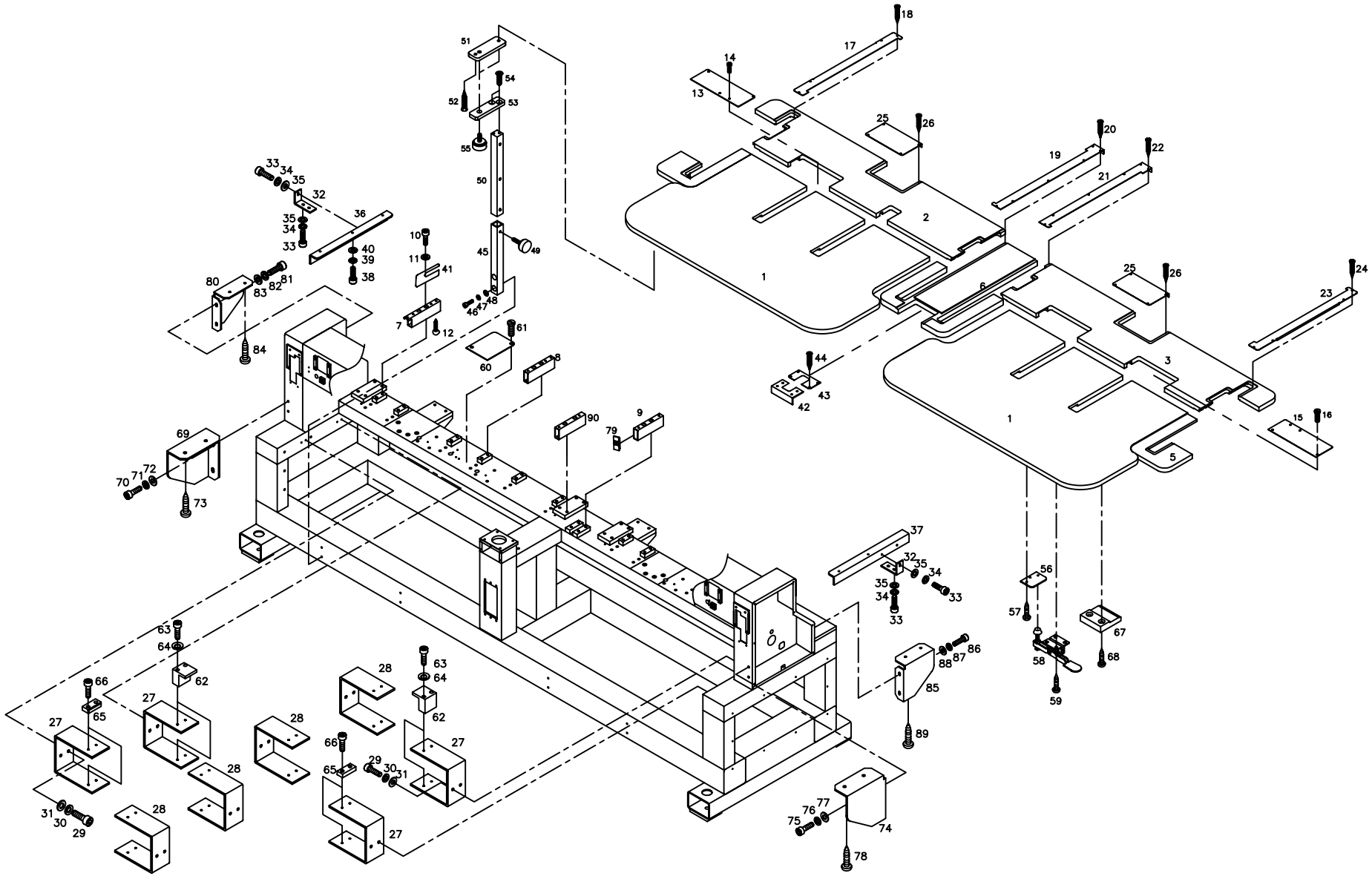

Ref.No	Part No.	Part Names	Q'ty
B1001	GP-004901-01	MOVABLE TABLE	2
B1002	GP-004896-01	FIXED TABLE "A"	1
B1003	GP-004897-01	FIXED TABLE "B"	1
B1004	GP-004898-01	FIXED TABLE "C"	1
B1005	GP-004899-01	FIXED TABLE "D"	1
B1006	GP-004900-01	FIXED TABLE "E"	1
B1007	GP-004907-00	TABLE SUPPORT A	4
B1008	GP-004908-00	TABLE SUPPORT B	8
B1009	GP-008797-00	TABLE SUPPORT C	10
B1010	16009SC-4113	HEX.SOCKET BOLT(M10*L25)	54
B1011	16029SW-4115	SPRING WASHER (10@)	54
B1012	16009SC-8330	TAPPING SCREW (M6*L20)	74
B1013	16018PR-UK01	MES CAM DRIVING BOX COVER	2
B1014	02030SC-T121	BED COVER SCREW(9/64" 40)	8
B1015	05001400UH60	THREAD CUTTING BOX COVER B	1
B1016	02030SC-T121	BED COVER SCREW(9/64" 40)	4
B1017	GP-004903-00	Y-LM Guide Cover A	1
B1018	08101SC-8329	TAPPING SCREW (M3*L16)	4
B1019	GP-004904-00	Y-LM Guide Cover B	1
B1020	08101SC-8329	TAPPING SCREW (M3*L16)	6
B1021	GP-004905-00	Y-LM Guide Cover C	1
B1022	08101SC-8329	TAPPING SCREW (M3*L16)	4
B1023	GP-004906-00	Y-LM Guide Cover D	1
B1024	08101SC-8329	TAPPING SCREW (M3*L16)	6
B1025	GP-004910-00	Y-MOTOR COVER	2
B1026	08101SC-8329	TAPPING SCREW (M3*L16)	8
B1027	05002000UH60	MOVING TABLE FIXED PLATE A	4
B1028	GP-004902-00	MOVING TABLE FIXED PLATE B	4
B1029	08062SC-4113	HEX. SOCKET BOLT (M5*L20)	16
B1030	16019SW-4115	SPRING WASHER (@5)	16
B1031	16018SW-1111	WASHER (@5)	16
B1032	05001500UK40	ANGLE SUPPORT	8
B1033	08076SC-4113	HEX. SOCKET BOLT (M5*L12)	16
B1034	16019SW-4115	SPRING WASHER (@5)	16
B1035	16018SW-1111	WASHER (@5)	16
B1036	05010400U000	TABLE SUPPORTER (B2) L=402	2
B1037	05010400U000	TABLE SUPPORTER (B2) L=402	2
B1038	08076SC-4113	HEX. SOCKET BOLT (M5*L12)	16
B1039	16019SW-4115	SPRING WASHER (@5)	16
B1040	16018SW-1111	WASHER (@5)	16

Ref. No	Part No.	Part Names	Q'ty
B1041	05001700U000	TABLE SUPPORT PLATE	32
B1042	05002400UH60	OP Holder Support Cover (A)	1
B1043	GP-004909-01	OP Holder Support Cover (B)	1
B1044	08101SC-8329	TAPPING SCREW (M3*L16)	4
B1045	16052AD-UK01	TABLE SUPPORT GUIDE	4
B1046	02015SC-7113	Hex.Socket Bolt(M4*L10)	8
B1047	02028SW-9115	Spring Washer (@4)	8
B1048	05009SW-1111	Washer (@4-L)	8
B1049	17062SC-UK01	Table Support Stopper Screw	4
B1050	05001300U000	TABLE SUPPORT L=263	4
B1051	16061PR-UK01	TABLE SUPPORT PLATE (A)	4
B1052	17012SC-8329	Hex. Socket Set Screw(M4*L16)	8
B1053	16058AD-UK01	TABLE SUPPORT PLATE (B)	4
B1054	15089SC-7119	C.S Screw (M4*L12)	8
B1055	17063SC-UK01	Table Support Stopper Screw	4
B1056	16065PR-UK01	CLAMP PLATE	4
B1057	16009SC-8330	Tapping Screw (M6*L20)	12
B1058	16067ET-UK01	TABLE TOGGLE CLAMP	12
B1059	16009SC-8330	Tapping Screw (M6*L20)	48
B1060	16016PR-UK01	GEAR COVER	3
B1061	02030SC-T121	BED COVER SCREW(9/64" 40)	6
B1062	05008100UK40	TABLE FIXING BLOCK	10
B1063	04030MC-7113	HEX.SOCKET BOLT (M4*L30)	20
B1064	18015SW-3111	WASHER (4@)	20
B1065	17085PM-UK01	POSITIONING BLOCK	8
B1066	02015SC-4113	HEX.SOCKET BOLT(M4*L10)	16
B1067	16063PM-UK01	TABLE HOLDING BLOCK	4
B1068	16009SC-8330	TAPPING SCREW (M6*L20)	8
B1069	GP-008800-00	Table Support (L)	1
B1070	03016SC-4113	CAP FRAME SET SCREW	2
B1071	16019SW-4115	SPRING WASHER (@5)	2
B1072	16018SW-1111	WASHER (@5)	2
B1073	16009SC-8330	TAPPING SCREW (M6*L20)	2
B1074	GP-008799-00	Table Support (R)	1
B1075	03016SC-4113	CAP FRAME SET SCREW	2
B1076	16019SW-4115	SPRING WASHER (@5)	2
B1077	16018SW-1111	WASHER (@5)	2
B1078	16009SC-8330	TAPPING SCREW (M6*L20)	2
B1079	16005RB-A001	Table Support End Cap(L)	28
B1080	GP-008800-00	Table Support (L)	2

B1 Work Table (UH1504D)

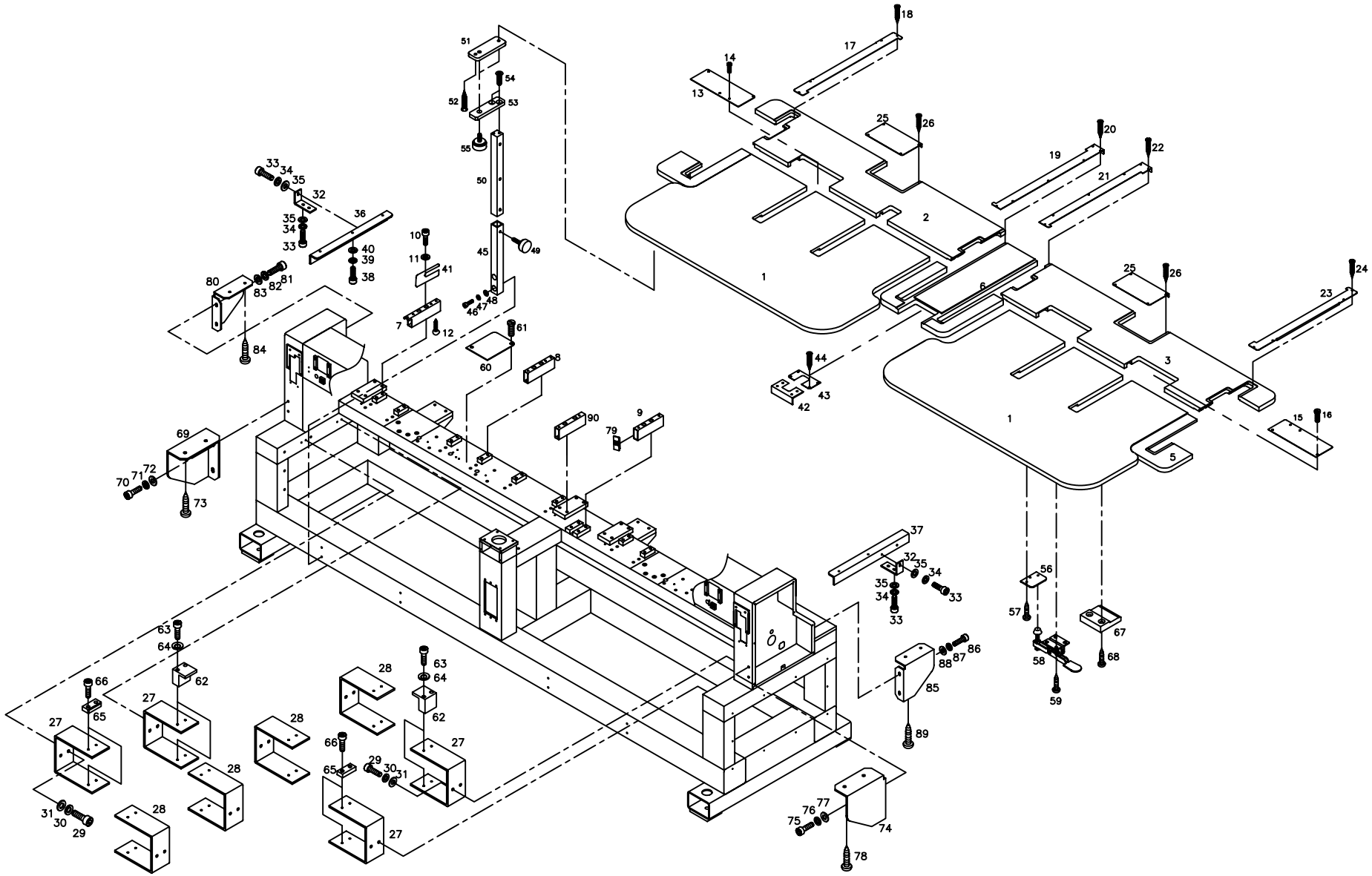

Ref.No	Part No.	Part Names	Q'ty
B1081	03016SC-4113	CAP FRAME SET SCREW	2
B1082	16019SW-4115	SPRING WASHER (@5)	2
B1083	16018SW-1111	WASHER (@5)	2
B1084	16009SC-8330	TAPPING SCREW (M6*L20)	2
B1085	GP-008799-00	Table Support (R)	2
B1086	03016SC-4113	CAP FRAME SET SCREW	2
B1087	16019SW-4115	SPRING WASHER (@5)	2
B1088	16018SW-1111	WASHER (@5)	2
B1089	16009SC-8330	TAPPING SCREW (M6*L20)	2
B1090	GP-010695-00	TABLE SUPPORT B	2

Ref. No	Part No.	Part Names	Q'ty

B2 Work Table (UH1506D)

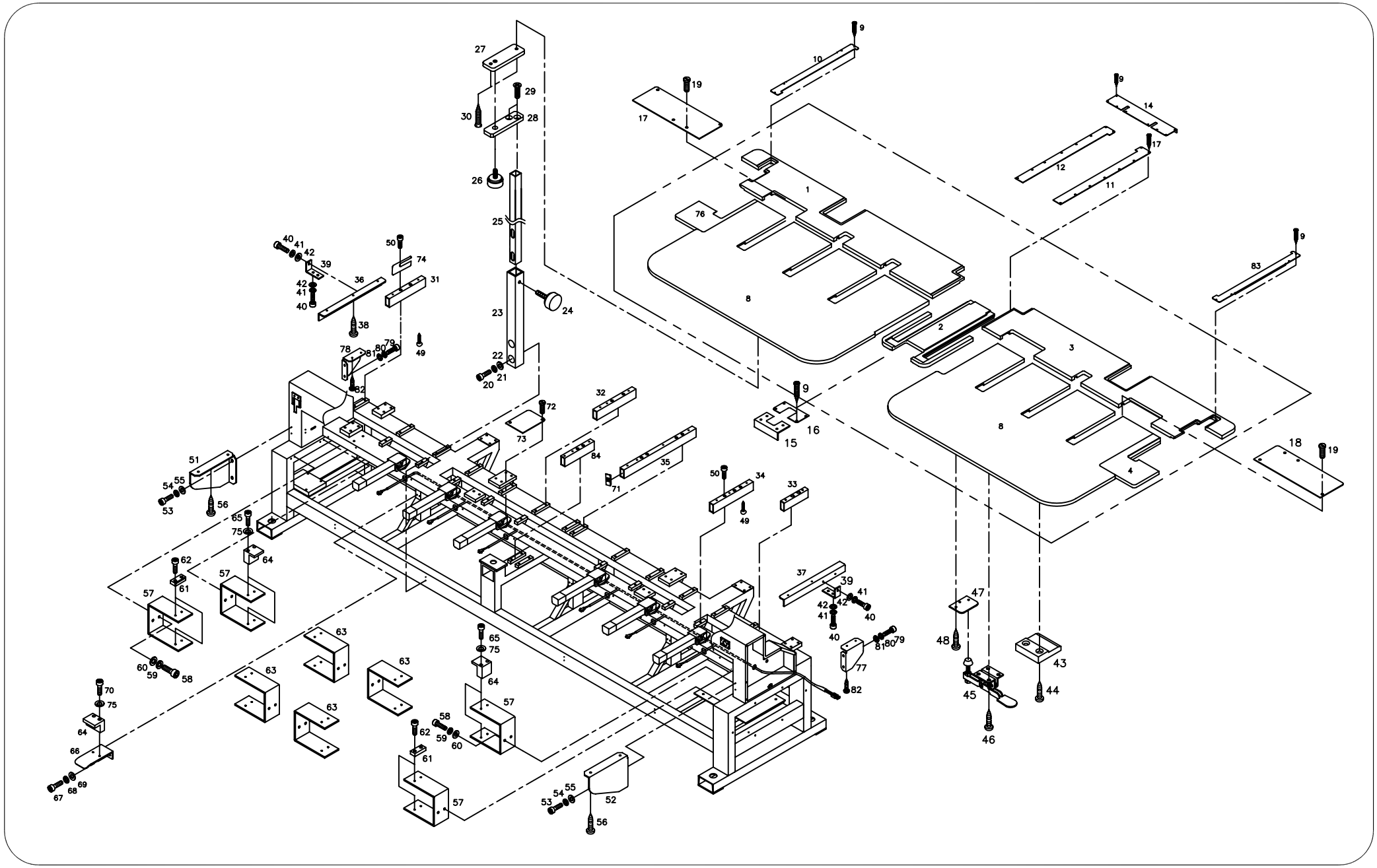

Ref.No	Part No.	Part Names	Q'ty
B2001	GP-007532-02	FIXED TABLE "A"	1
B2002	GP-007533-01	FIXED TABLE "B"	1
B2003	GP-007534-02	FIXED TABLE "C"	1
B2004	GP-007535-00	FIXED TABLE "D"	1
B2008	08000100UH60	Movable Table	2
B2009	08101SC-8329	TAPPING SCREW (M3*L16)	68
B2010	GP-004903-00	Y-LM GUIDE COVER A	1
B2011	GP-007536-00	Y-LM GUIDE COVER B	1
B2012	GP-007535-00	Y-LM GUIDE COVER C	1
B2014	GP-007537-01	COUPLING COVER	2
B2015	05002400UH60	OP Holder Support Cover (A)	1
B2016	05002500UH60	OP Holder Support Cover (B)	1
B2017	16018PR-UK01	MES CAM DRIVING BOX COVER	2
B2018	05001400UH60	THREAD CUTTING BOX COVER B	1
B2019	02030SC-T121	BED COVER SCREW(9/64" 40)	8
B2020	02015SC-7113	HEX.SOCKET BOLT(M4*L10)	8
B2021	02028SW-9115	SPRING WASHER (@4)	8
B2022	05009SW-1111	WASHER (@4-L)	8
B2023	16052AD-UK01	TABLE SUPPORT GUIDE	4
B2024	17062SC-UK01	TABLE SUPPORT STOPPER SCREW	4
B2025	GP-008798-00	TABLE SUPPORT BAR GUIDE	4
B2026	17063SC-UK01	TABLE SUPPORT STOPPER SCREW	4
B2027	16061PR-UK01	TABLE SUPPORT PLATE (A)	4
B2028	16058AD-UK01	TABLE SUPPORT PLATE (B)	4
B2029	15089SC-7119	C.S SCREW (M4*L10)	8
B2030	17012SC-8329	HEX. SOCKET SET SCREW(M4*L16)	8
B2031	05000900UH60	TABLE SUPPORT A	4
B2032	GP-009964-00	TABLE SUPPORT B(L=317.5)	9
B2033	GP-008797-00	TABLE SUPPORT C	2
B2034	05001200UH60	TABLE SUPPORT D	4
B2035	05001300UH60	TABLE SUPPORT E	2
B2036	05010400U000	TABLE SUPPORTER (B2) L=402	2
B2037	05010200U000	TABLE SUPPORTER (A2)L=402	2
B2038	16009SC-8330	TAPPING SCREW (M6*L20)	12
B2039	05001500UK40	ANGLE SUPPORT	8
B2040	08076SC-7113	HEX. SOCKET BOLT (M5*L12)	16
B2041	18048SW-3115	SPRING WASHER (@5)	16
B2042	16018SW-1111	WASHER (@5)	16
B2043	16063PM-UK01	TABLE HOLDING BLOCK	7
B2044	16009SC-8330	TAPPING SCREW (M6*L20)	14

Ref. No	Part No.	Part Names	Q'ty
B2045	16067ET-UK01	TABLE TOGGLE CLAMP	8
B2046	19002SC-1330	TAPPING SCREW (4*L16-NO1)	32
B2047	16065PR-UK01	CLAMP PLATE	4
B2048	16009SC-8330	TAPPING SCREW (M6*L20)	12
B2049	16009SC-8330	TAPPING SCREW (M6*L20)	54
B2050	14002SC-7113	HEX.SOCKET BOLT (M6*L15)	54
B2051	16020PR-UK01	FRONT TABLE SUPPORT (L)	1
B2052	16025PR-UK01	FRONT TABLE SUPPORT (R)	1
B2053	08076SC-7113	HEX. SOCKET BOLT (M5*L12)	4
B2054	18048SW-3115	SPRING WASHER (@5)	4
B2055	16018SW-1111	WASHER (@5)	4
B2056	16009SC-8330	TAPPING SCREW (M6*L20)	4
B2057	05002000UH60	MOVING TABLE FIXED PLATE A	4
B2058	08062SC-7113	HEX. SOCKET BOLT (M5*L20)	16
B2059	18048SW-3115	SPRING WASHER (@5)	16
B2060	16018SW-1111	WASHER (@5)	16
B2061	17085PM-UK01	POSITIONING BLOCK	8
B2062	02015SC-7113	HEX.SOCKET BOLT(M4*L10)	16
B2063	GP-004133-00	MOVING TABLE FIXED PLATE B	4
B2064	05008100UK40	TABLE FIXING BLOCK	10
B2065	05014SC-7113	HEX. SOCKET BOLT (M4*L25)	20
B2066	17073PR-UK01	TABLE SUPPORT ANGLE "F"	3
B2067	08076SC-7113	HEX. SOCKET BOLT (M5*L12)	6
B2068	18048SW-3115	SPRING WASHER (@5)	6
B2069	16018SW-1111	WASHER (@5)	6
B2070	05014SC-7113	HEX. SOCKET BOLT (M4*L25)	6
B2071	GP-003757-00	Table Support End Cap(L)	44
B2072	02030SC-T121	Bed Cover Screw(9/64" 40)	6
B2073	16016PR-UK01	Gear Cover	3
B2074	05001700U000	Table Support Plate	10
B2075	18015SW-3111	WASHER(4@)	14
B2076	GP-004898-01	FIXED TABLE "C"	1
B2077	GP-008800-00	Tsble Rear Support(R)	1
B2078	GP-008799-00	Tsble Rear Support(L)	1
B2079	08076SC-7113	HEX. SOCKET BOLT (M5*L12)	4
B2080	18048SW-3115	SPRING WASHER (@5)	4
B2081	16018SW-1111	WASHER (@5)	4
B2082	16009SC-8330	TAPPING SCREW (M6*L20)	4
B2083	GP-003757-00	Y-LM Guide Cover D	1
B2084	GP-009964-00	TABLE SUPPORT B(L=317.5)	9

B3

Work Table (UH1208D)

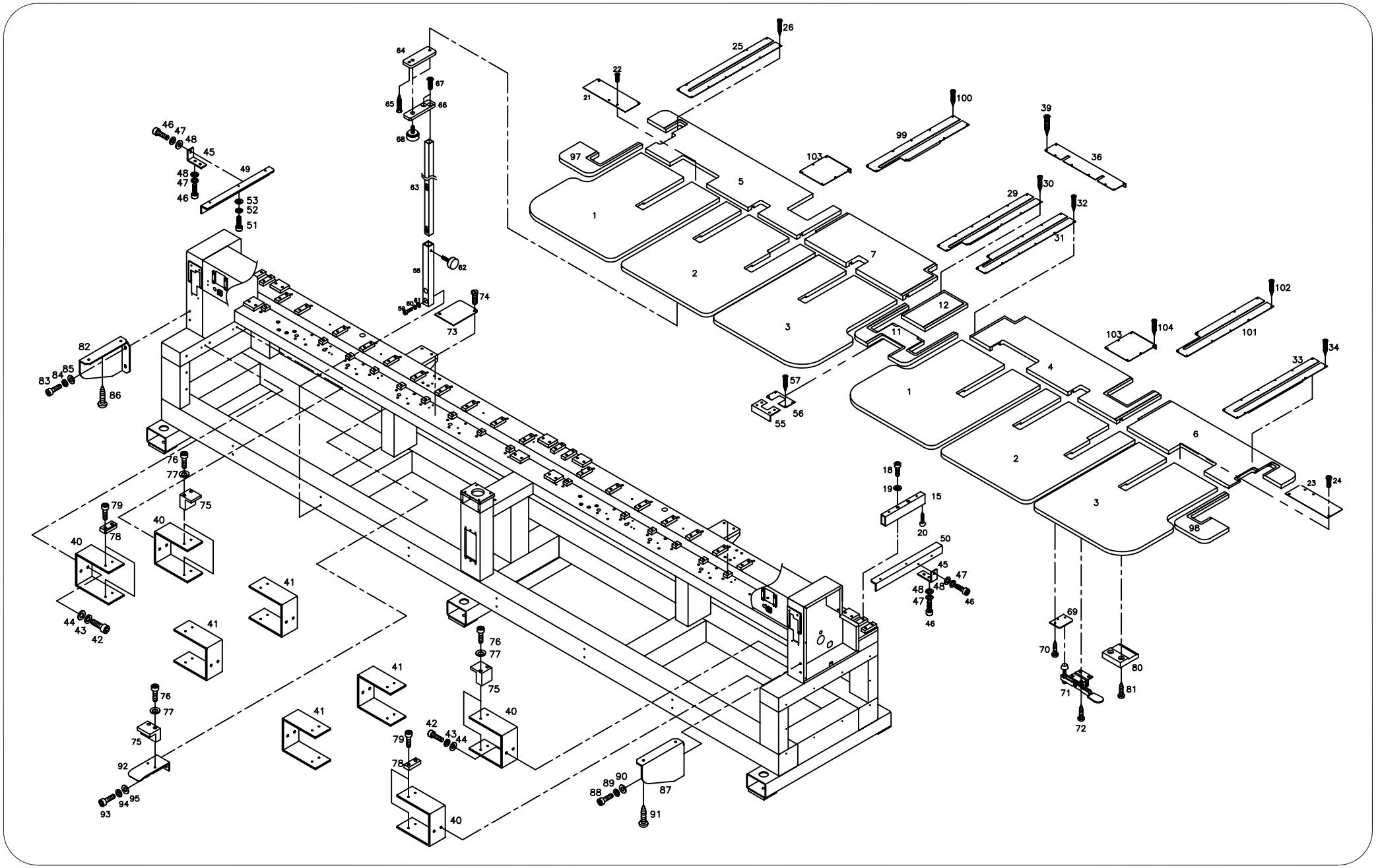

Ref.No	Part No.	Part Names	Q'ty
B3001	GP-004116-00	MOVABLE TABLE "A"	2
B3002	GP-004117-02	MOVABLE TABLE "B"	2
B3003	GP-004118-00	MOVABLE TABLE "C"	2
B3004	GP-004119-01	FIXED TABLE "A"	1
B3005	GP-008894-00	FIXED TABLE "B"	1
B3006	GP-004120-01	FIXED TABLE "C"	1
B3007	GP-004121-01	FIXED TABLE "D"	1
B3011	GP-008895-01	FIXED TABLE "H"	1
B3012	GP-008900-00	FIXED TABLE "I"	1
B3015	GP-008797-00	TABLE SUPPORT C(197.5)	17
B3018	16009SC-4113	HEX.SOCKET BOLT(M10*L25)	54
B3019	16029SW-4115	SPRING WASHER (10@)	54
B3020	16009SC-8330	TAPPING SCREW (M6*L20)	74
B3021	16018PR-UK01	MES CAM DRIVING BOX COVER	2
B3022	02030SC-T121	BED COVER SCREW(9/64" 40)	8
B3023	05001400UH60	THREAD CUTTING BOX COVER B	1
B3024	02030SC-T121	BED COVER SCREW(9/64" 40)	4
B3025	GP-004127-00	Y-LM Guide Cover A	1
B3026	08101SC-8329	TAPPING SCREW (M3*L16)	10
B3029	GP-004129-00	Y-LM Guide Cover C	1
B3030	08101SC-8329	TAPPING SCREW (M3*L16)	11
B3031	GP-004130-00	Y-LM Guide Cover D	1
B3032	08101SC-8329	TAPPING SCREW (M3*L16)	11
B3033	GP-004131-00	Y-LM Guide Cover E	1
B3034	08101SC-8329	TAPPING SCREW (M3*L16)	10
B3036	GP-004132-00	COUPLING COVER	2
B3040	05002000UH60	MOVING TABLE FIXED PLATE A	4
B3041	GP-004133-00	MOVING TABLE FIXED PLATE B	4
B3042	08062SC-4113	HEX. SOCKET BOLT (M5*L20)	8
B3043	16019SW-4115	SPRING WASHER (@5)	8
B3044	16018SW-1111	WASHER (@5)	8
B3045	05001500UK40	ANGLE SUPPORT	8
B3046	08076SC-4113	HEX. SOCKET BOLT (M5*L12)	16
B3047	16019SW-4115	SPRING WASHER (@5)	16
B3048	16018SW-1111	WASHER (@5)	16
B3049	05010400U000	TABLE SUPPORTER (B2) L=402	2
B3050	05010200U000	TABLE SUPPORTER (A2) L=402	2
B3051	08076SC-4113	HEX. SOCKET BOLT (M5*L12)	16
B3052	16019SW-4115	SPRING WASHER (@5)	16
B3053	16018SW-1111	WASHER (@5)	16

Ref. No	Part No.	Part Names	Q'ty
B3055	05002400UH60	OP Holder Support Cover (A)	1
B3056	05002500UH60	OP Holder Support Cover (B)	1
B3057	08101SC-8329	TAPPING SCREW (M3*L16)	4
B3058	GP-008897-00	TABLE SUPPORT BAR GUIDE(L=594.5)	4
B3059	02015SC-7113	Hex.Socket Bolt(M4*L10)	8
B3060	02028SW-9115	Spring Washer (@4)	8
B3061	05009SW-1111	Washer (@4-L)	8
B3062	17062SC-UK01	Table Support Stopper Screw	4
B3063	05001300U000	TABLE SUPPORT L=263	6
B3064	16061PR-UK01	TABLE SUPPORT PLATE (A)	4
B3065	17012SC-8329	Hex. Socket Set Screw(M4*L16)	8
B3066	16058AD-UK01	TABLE SUPPORT PLATE (B)	4
B3067	15089SC-7119	C.S Screw (M4*L12)	8
B3068	17063SC-UK01	Table Support Stopper Screw	4
B3069	16065PR-UK01	CLAMP PLATE	4
B3070	16009SC-8330	Tapping Screw (M6*L20)	12
B3071	16067ET-UK01	TABLE TOGGLE CLAMP	12
B3072	16009SC-8330	Tapping Screw (M6*L20)	48
B3073	16016PR-UK01	GEAR COVER	3
B3074	02030SC-T121	BED COVER SCREW(9/64" 40)	6
B3075	05008100UK40	TABLE FIXING BLOCK	10
B3076	04030MC-7113	HEX.SOCKET BOLT (M4*L30)	20
B3077	18015SW-3111	WASHER (4@)	20
B3078	17085PM-UK01	POSITIONING BLOCK	8
B3079	02015SC-4113	HEX.SOCKET BOLT(M4*L10)	16
B3080	16063PM-UK01	TABLE HOLDING BLOCK	4
B3081	16009SC-8330	TAPPING SCREW (M6*L20)	8
B3082	16020PR-UK01	FRONT TABLE SUPPORT (L)	1
B3083	03016SC-4113	CAP FRAME SET SCREW	2
B3084	16019SW-4115	SPRING WASHER (@5)	2
B3085	16018SW-1111	WASHER (@5)	2
B3086	16009SC-8330	TAPPING SCREW (M6*L20)	2
B3087	16025PR-UK01	FRONT TABLE SUPPORT (R)	1
B3088	03016SC-4113	CAP FRAME SET SCREW	2
B3089	16019SW-4115	SPRING WASHER (@5)	2
B3090	16018SW-1111	WASHER (@5)	2
B3091	16009SC-8330	TAPPING SCREW (M6*L20)	2
B3092	17073PR-UK01	Table Support Angle "F"	4
B3093	08076SC-7113	Hex. Socket Bolt (M5*L12)	2
B3094	18048SW-3115	Spring Washer (@5)	12

B3

Work Table (UH1208D)

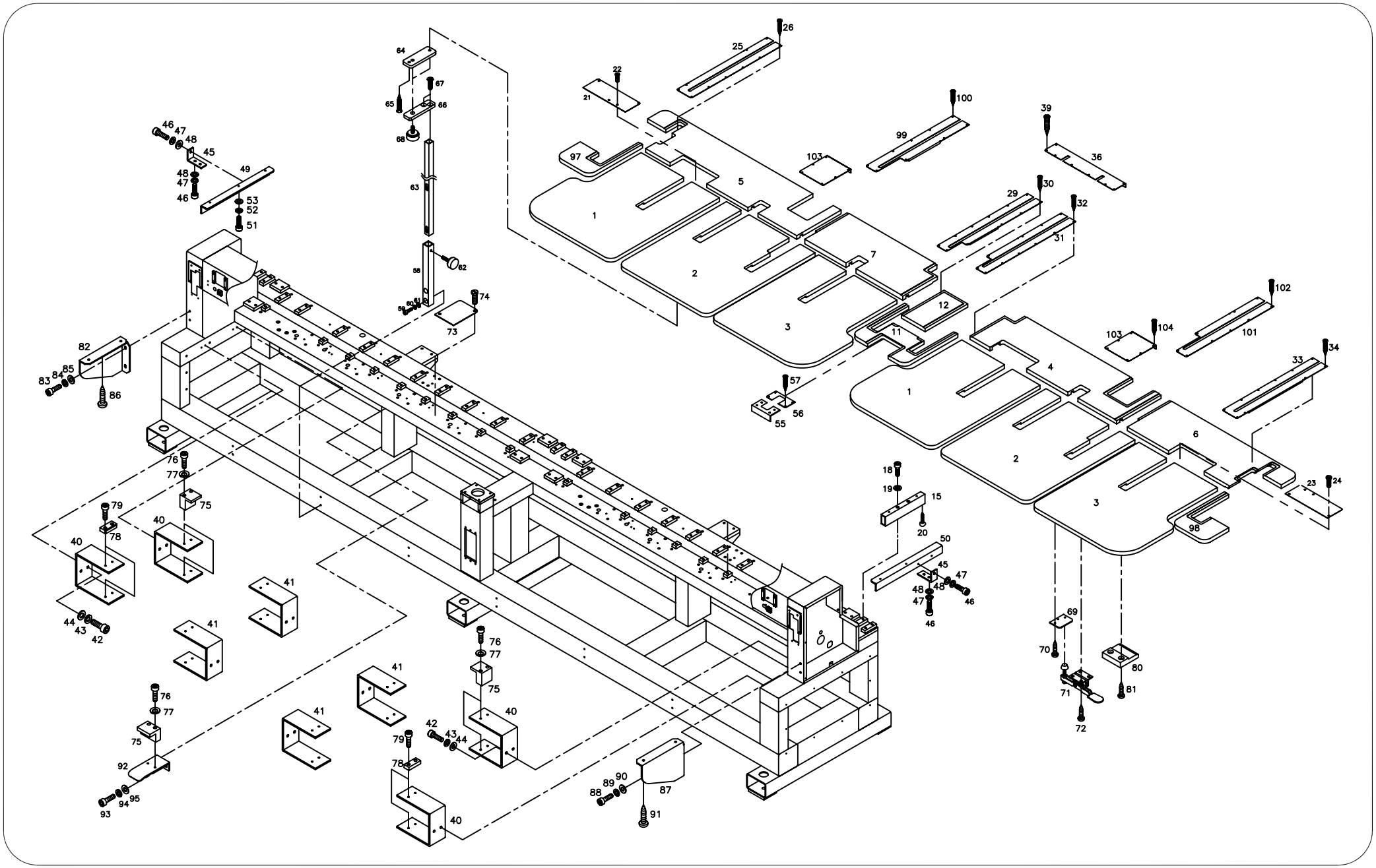

Ref.No	Part No.	PartNames	Q'ty
B3095	16018SW-1111	Washer (@5)	12
B3097	GP-004120-01	Fixed Table "C"(3X3공용)	1
B3098	16005RB-A001	Fixed Table "D"(3X3공용)	1
B3099	GP-008898-00	Y-LM GUIDE COVER C	1
B3100	08101SC-8329	TAPPING SCREW (M3*L16)	9
B3101	GP-008899-00	Y-LM GUIDE COVER D	1
B3102	08101SC-8329	TAPPING SCREW (M3*L16)	9
B3103	GP-007514-00	Y-Driving Box Cover B	2
B3104	08101SC-8329	TAPPING SCREW (M3*L16)	12

Ref. No	Part No.	Part Names	Q'ty

B4 Work Table (UH1512D)

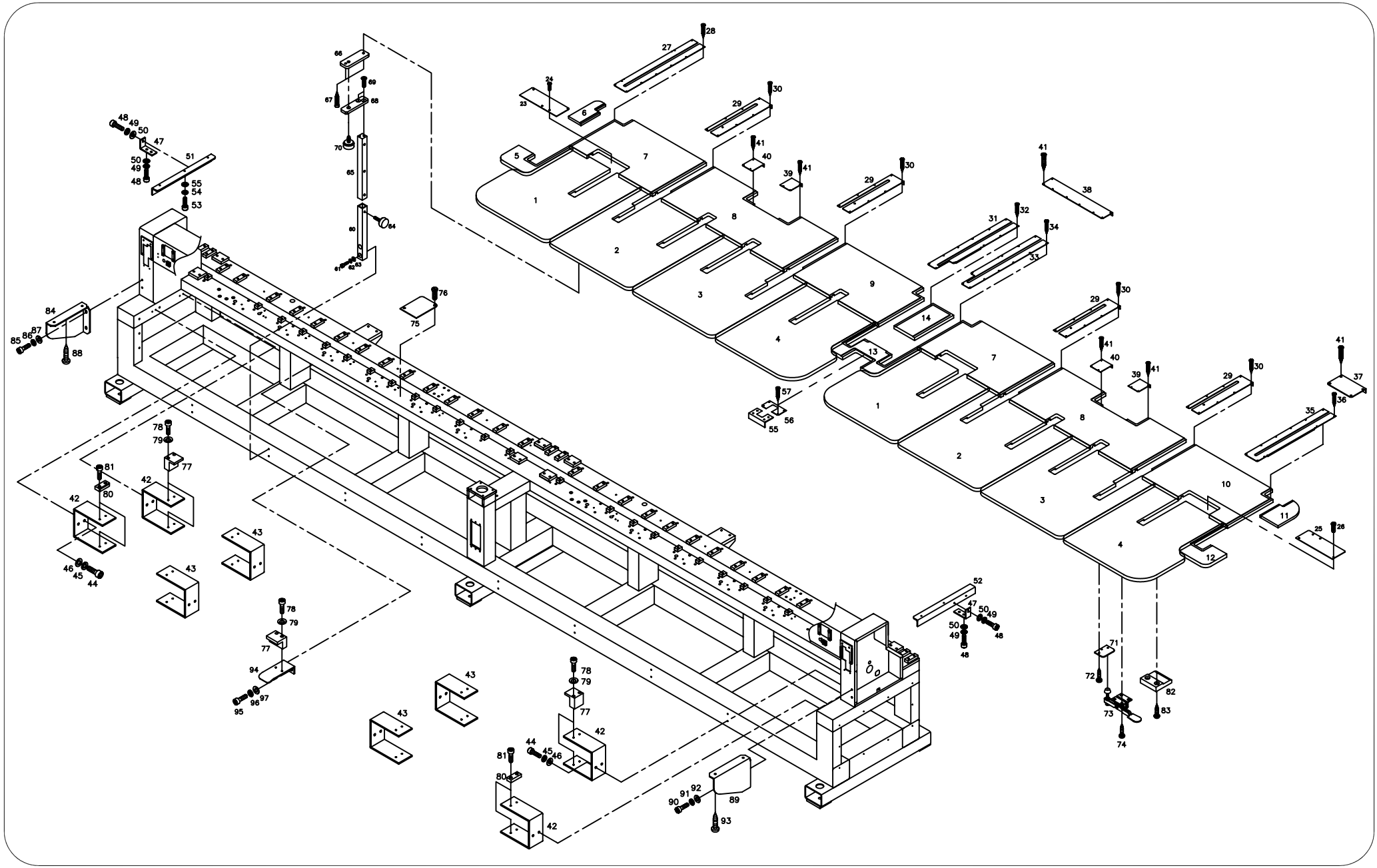

Ref.No	Part No.	Part Names	Q'ty
B4001	GP-005174-00	MOVABLE TABLE "A"	2
B4002	GP-005175-00	MOVABLE TABLE "B"	2
B4003	GP-005176-00	MOVABLE TABLE "C"	2
B4004	GP-005177-00	MOVABLE TABLE "D"	2
B4005	GP-004119-00	FIXED TABLE "A"	1
B4006	05000200NH60	FIXED TABLE "B"	1
B4007	GP-005058-01	FIXED TABLE "C"	2
B4008	GP-005059-00	FIXED TABLE "D"	2
B4009	GP-004121-00	FIXED TABLE "E"	1
B4010	GP-004122-00	FIXED TABLE "F"	1
B4011	05000700NH60	FIXED TABLE "G"	1
B4012	GP-004123-00	FIXED TABLE "H"	1
B4013	GP-004124-00	FIXED TABLE "I"	1
B4014	GP-004125-00	FIXED TABLE "J"	1
B4023	16018PR-UK01	MES CAM DRIVING BOX COVER	2
B4024	02030SC-T121	BED COVER SCREW(9/64" 40)	8
B4025	05001400UH60	THREAD CUTTING BOX COVER B	1
B4026	02030SC-T121	BED COVER SCREW(9/64" 40)	4
B4027	GP-004127-00	Y-LM Guide Cover A	1
B4028	08101SC-8329	TAPPING SCREW (M3*L16)	10
B4029	GP-004128-00	Y-LM Guide Cover B	4
B4030	08101SC-8329	TAPPING SCREW (M3*L16)	64
B4031	GP-004129-00	Y-LM Guide Cover C	1
B4032	08101SC-8329	TAPPING SCREW (M3*L16)	11
B4033	GP-004130-00	Y-LM Guide Cover D	1
B4034	08101SC-8329	TAPPING SCREW (M3*L16)	11
B4035	GP-004131-00	Y-LM Guide Cover E	1
B4036	08101SC-8329	TAPPING SCREW (M3*L16)	10
B4037	05001800UH60	COUPLING COVER A	2
B4038	GP-004132-00	COUPLING COVER B	1
B4039	05000120UH80	Y-MOTOR COUPLING COVER R	2
B4040	05000110UH80	Y-MOTOR COUPLING COVER L	2
B4041	08101SC-8329	TAPPING SCREW (M3*L16)	16
B4042	05002000UH60	MOVING TABLE FIXED PLATE A	4
B4043	GP-004133-00	MOVING TABLE FIXED PLATE B	4
B4044	08062SC-4113	HEX. SOCKET BOLT (M5*L20)	8
B4045	16019SW-4115	SPRING WASHER (@5)	8
B4046	16018SW-1111	WASHER (@5)	8
B4047	05001500UK40	ANGLE SUPPORT	8
B4048	08076SC-4113	HEX. SOCKET BOLT (M5*L12)	16

Ref. No	Part No.	Part Names	Q'ty
B4049	16019SW-4115	SPRING WASHER (@5)	16
B4050	16018SW-1111	WASHER (@5)	16
B4051	05010400U000	TABLE SUPPORTER (B2) L=402	2
B4052	05010200U000	TABLE SUPPORTER (A2) L=402	2
B4053	08076SC-4113	HEX. SOCKET BOLT (M5*L12)	16
B4054	16019SW-4115	SPRING WASHER (@5)	16
B4055	16018SW-1111	WASHER (@5)	16
B4057	05002400UH60	OP Holder Support Cover (A)	1
B4058	05002500UH60	OP Holder Support Cover (B)	1
B4059	08101SC-8329	TAPPING SCREW (M3*L16)	4
B4060	GP-008897-00	TABLE SUPPORT GUIDE	4
B4061	02015SC-7113	Hex.Socket Bolt(M4*L10)	8
B4062	02028SW-9115	Spring Washer (@4)	8
B4063	05009SW-1111	Washer (@4-L)	8
B4064	17062SC-UK01	Table Support Stopper Screw	4
B4065	05001300U000	TABLE SUPPORT L=263	4
B4066	16061PR-UK01	TABLE SUPPORT PLATE (A)	4
B4067	17012SC-8329	Hex. Socket Set Screw(M4*L16)	8
B4068	16058AD-UK01	TABLE SUPPORT PLATE (B)	4
B4069	15089SC-7119	C.S Screw (M4*L12)	8
B4070	17063SC-UK01	Table Support Stopper Screw	4
B4071	16065PR-UK01	CLAMP PLATE	4
B4072	16009SC-8330	Tapping Screw (M6*L20)	12
B4073	16067ET-UK01	TABLE TOGGLE CLAMP	12
B4074	16009SC-8330	Tapping Screw (M6*L20)	48
B4075	16016PR-UK01	GEAR COVER	3
B4076	02030SC-T121	BED COVER SCREW(9/64" 40)	6
B4077	05008100UK40	TABLE FIXING BLOCK	10
B4078	04030MC-7113	HEX.SOCKET BOLT (M4*L30)	20
B4079	18015SW-3111	WASHER (4@)	20
B4080	17085PM-UK01	POSITIONING BLOCK	8
B4081	02015SC-4113	HEX.SOCKET BOLT(M4*L10)	16
B4082	16063PM-UK01	TABLE HOLDING BLOCK	4
B4083	16009SC-8330	TAPPING SCREW (M6*L20)	8
B4084	16020PR-UK01	FRONT TABLE SUPPORT (L)	1
B4085	03016SC-4113	CAP FRAME SET SCREW	2
B4086	16019SW-4115	SPRING WASHER (@5)	2
B4087	16018SW-1111	WASHER (@5)	2
B4088	16009SC-8330	TAPPING SCREW (M6*L20)	2
B4089	16025PR-UK01	FRONT TABLE SUPPORT (R)	1

B4 Work Table (UH1512D)

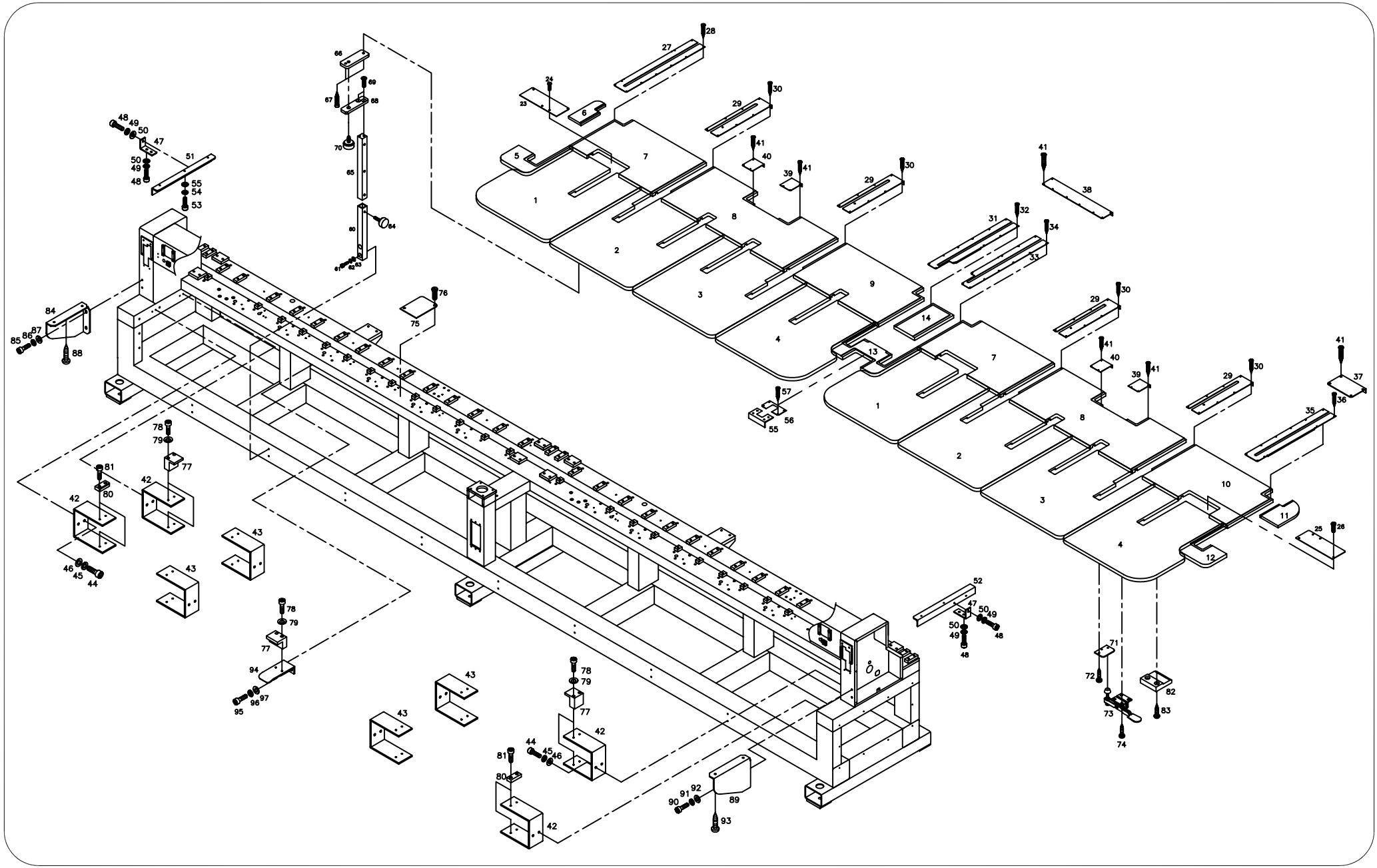

Ref.No	Part No.	PartNames	Q'ty
B4090	03016SC-4113	CAP FRAME SET SCREW	2
B4091	16019SW-4115	SPRING WASHER (@5)	2
B4092	16018SW-1111	WASHER (@5)	2
B4093	16009SC-8330	TAPPING SCREW (M6*L20)	2
B4094	17073PR-UK01	Table Support Angle "F"	4
B4095	08076SC-7113	Hex. Socket Bolt (M5*L12)	24
B4096	18048SW-3115	Spring Washer (@5)	24
B4097	16018SW-1111	Washer (@5)	24

Ref. No	Part No.	Part Names	Q'ty

C

Spool Stand

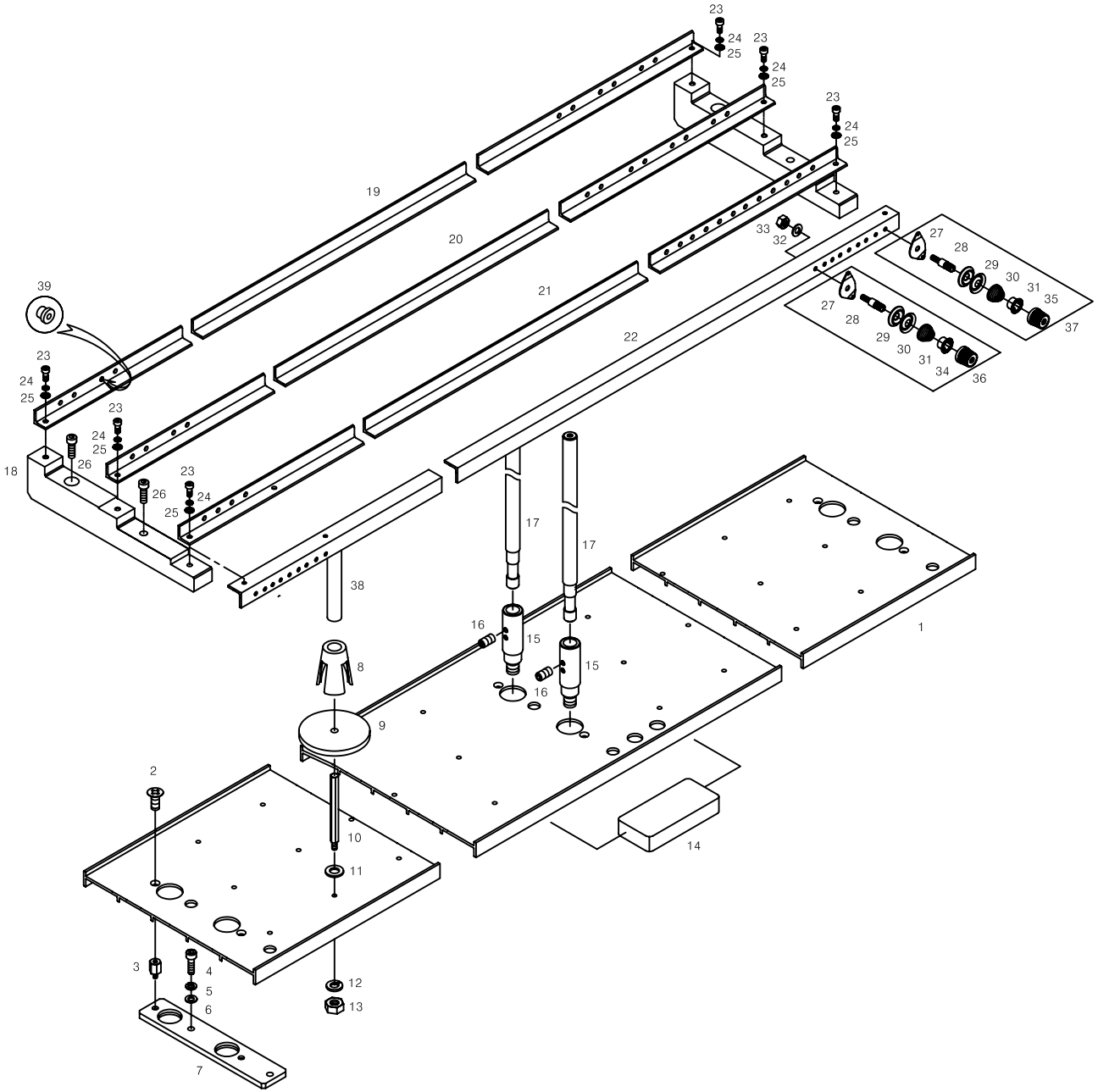

Ref. No	Part No.	Part Names		Q'ty
C-001	GP-004911-00	SPOOL PLATE L=880	(UH1504D)	2
	05100105UH60	SPOOL PLATE L=1280	(UH1506D)	
	GP-004134-00	SPOOL PLATE L=1680	(UH1208D)	
	GP-005061-00	SPOOL PLATE L=2480	(UH1512D)	
C-002	02002SC-7119	PLUSS SCREW (M4*L8)		8
C-003	11005CW-UK01	SPOOL PLATE FIXING BOLT M6*L21		16
C-004	03016SC-4113	CAP FRAME SET SCREW		16
C-005	18048SW-3115	SPRING WASHER (@5)		16
C-006	18049SW-3111	WASHER (@5)		16
C-007	12004PR-W121	SPOOL PLATE SUPPORT BASE		8
C-008	12012PM-A001	SPOOL HOLDER		90
C-009	12052SF-A001	SPOOL SPONGE		90
C-010	13009SC-A001	COLOR CHANGE CAM GEAR SCREW		90
C-011	18049SW-3111	WASHER (@5)		90
C-012	18048SW-3115	SPRING WASHER (@5)		90
C-013	12010SN-1211	HEX.NUT (M5)		90
C-014	12033RB-UK01	CUSHION RUBBER		3
C-015	01000500H000	SPOOL STAND STUD BOLT L113		16
C-016	04014SC-4517	HEX.SOCKET SET SCREW(M5*L5)		32
C-017	12015SF-A001	SPOOL STAND (L=330)		16
C-018	10600100H000	THREAD ANGLE FRAME		8
C-019	GP-004913-00	THREAD ANGLE "A" L=820	(UH1504D)	2
	05200105UH60	THREAD ANGLE "A" L=1220	(UH1506D)	
	GP-004135-00	THREAD ANGLE "A" L=1620	(UH1208D)	
	05200105UH00	THREAD ANGLE "A" L=2420	(UH1512D)	
C-020	GP-004914-00	THREAD ANGLE "B" L=820	(UH1504D)	2
	05200205UH60	THREAD ANGLE "B" L=1220	(UH1506D)	
	GP-004136-00	THREAD ANGLE "B" L=1620	(UH1208D)	
	05200205UH00	THREAD ANGLE "B" L=2420	(UH1512D)	
C-021	GP-004915-00	THREAD ANGLE "C" L=820	(UH1504D)	2
	05200305UH60	THREAD ANGLE "C" L=1220	(UH1506D)	
	GP-004137-00	THREAD ANGLE "C" L=1620	(UH1208D)	
	05200305UH00	THREAD ANGLE "C" L=2420	(UH1512D)	
C-022	GP-005006-00	THREAD ANGLE "D" L=820	(UH1504D)	2
	05200405UH60	THREAD ANGLE "D" L=1220	(UH1506D)	
	GP-004138-00	THREAD ANGLE "D" L=1620	(UH1208D)	
	05200415UH00	THREAD ANGLE "D" L=2420	(UH1512D)	
C-023	02015SC-7113	HEX.SOCKET BOLT(M4*L10)		24
C-024	02028SW-9115	SPRING WASHER (@4)		24
C-025	06003SW-2111	WASHER (@4)		24

Ref. No	Part No.	Part Names	Q'ty
C-026	03016SC-4113	CAP FRAME SET SCREW	16
C-027	11162PR-A001	TENSION PLATE	90
C-027	11162PR-A001	TENSION PLATE	90
C-028	08301000A000	TENSION ADJUSTING STUD	90
C-029	11153PR-B001	TENSION DISC @22	180
C-030	08301100A000	TENSION SPRING	90
C-031	11088PM-A001	TENSION SPRING STOPPER	90
C-032	18048SW-3115	SPRING WASHER (@5)	90
C-033	03031SN-A001	PIN. NUT (11/64,N=40)	90
C-034	08300600A000	SUB TENSION ADJUSTING NUT(A)	84
C-035	10600610A000	SUB TENSION ADJUSTING NUT(B)	6
C-036	10600110B000	SUB TENSION ADJUSTING SET(NEW)	84
C-037	10600210B000	SUB TENSION ADJUSTING SET	6
C-038	10000100A000	THREAD GUIDE L=200	12
C-039	12042PM-A001	EYELET	180

D1 Main Drive System I

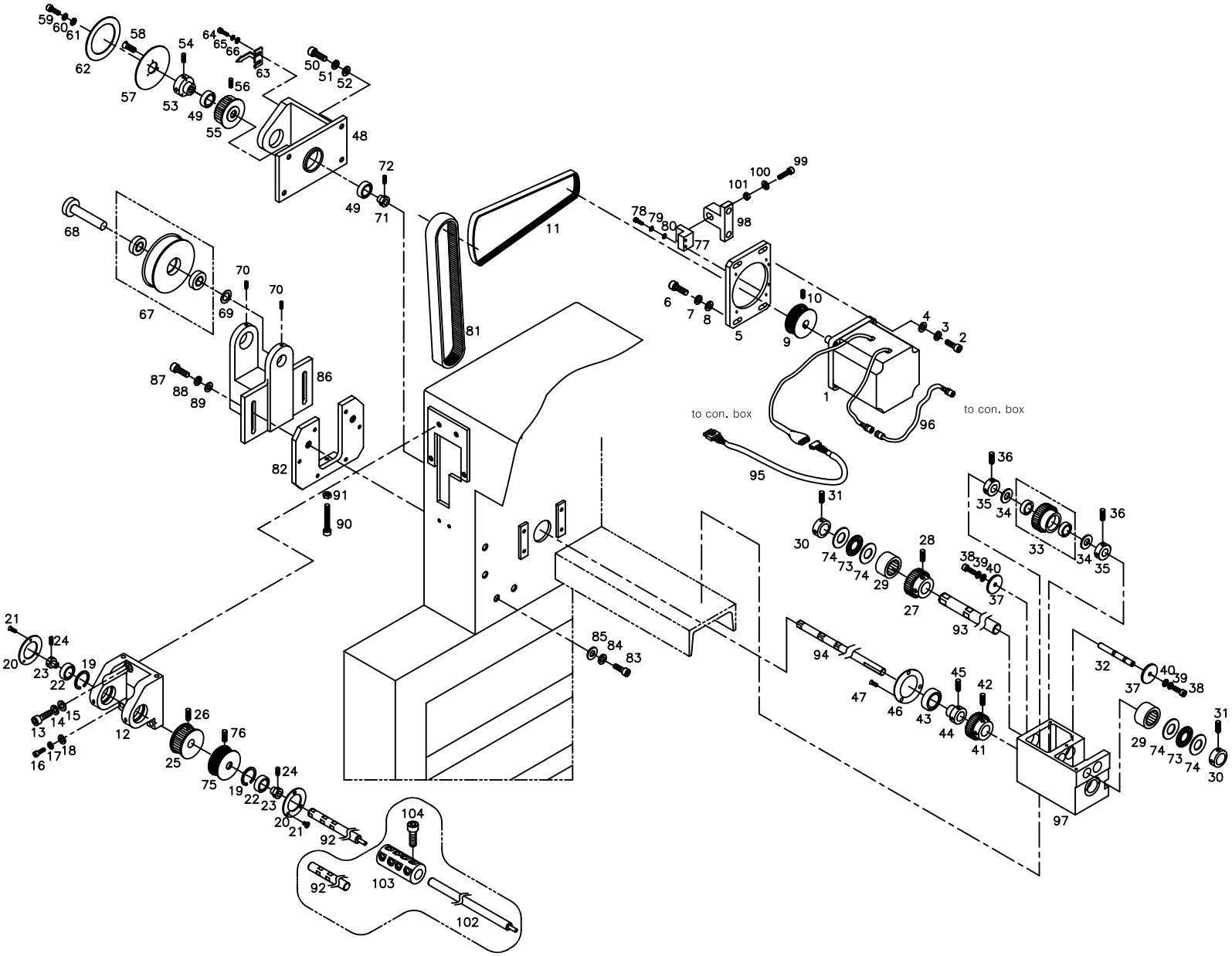

Ref.No	Part No.	Part Names	Q'ty
D1001	SFAM-600-300	MAIN MOTOR	1
D1002	15030SC-7113	HEX. SOCKET BOLT (M5*L30)	4
D1003	18048SW-3115	SPRING WASHER (5@)	4
D1004	18049SW-3111	WASHER (@5)	4
D1005	GP-012897-00	MOTOR FIXING	1
D1006	14046SC-7113	HEX.SOCKET BOLT (M6*L30)	4
D1007	03026SW-9115	SPRING WASHER (@6)	4
D1008	08057SW-1111	WASHER (@6)	4
D1009	03010800UH80	MAIN MOTOR PULLEY	1
D1010	04014SC-4517	HEX.SOCKET SET SCREW(M5*L5)	2
D1011	03100700UH80	MAIN DRIVING BELT 200J	1
D1012	03101300UH80	UPPER SHAFT SUPPORT BRACKET(L)	1
D1013	16009SC-4113	HEX.SOCKET BOLT(M10*L25)	2
D1014	01008SW-9115	SPRING WASHER(@10)	2
D1015	01007SW-1111	WASHER(@10)	2
D1016	08091SC-7113	HEX. SOCKET BOLT (M6*L20)	2
D1017	03026SW-9115	SPRING WASHER (@6)	2
D1018	08057SW-1111	WASHER (@6)	2
D1019	03010SR-4013	C-RING (@47)	2
D1020	03101400U000	UPPER SHAFT SUPPORT COVER	2
D1021	05007SC-7113	HEX. SOCKET BOLT (M3*L5)	6
D1022	01001100H000	BALL BEARING(6005ZZ)	2
D1023	03005210H000	COLLAR "A"	2
D1024	14060AF-4517	HEX.SOCKET SCREW(M6*L6)	2
D1025	03000120U000	TOP SHAFT TIMMING PULLEY	1
D1026	14060AF-4517	HEX.SOCKET SCREW(M6*L6)	4
D1027	13032GA-UK06	INDEX SHAFT GEAR UK06	1
D1028	04012AF-A001	HOOK SHAFT BUSH SCREW (15/64)	2
D1029	04027BR-A001	NEEDLE BEARING (HMK1515)	1
D1030	03704900A000	CAM SHAFT COLLAR	2
D1031	04016AF-A001	CAM COLLAR SCREW	4
D1032	13041SH-UK01	MIDDLE SHAFT	1
D1033	13034GA-UK06	MIDDLE SHAFT GEAR UK06	1
	13036BR-UK01	MIDDLE SHAFT GEAR NEEDLE BEARING(@10-@19)NNB	4
D1034	12019BR-T121	FIBER WASHER R-TW1020	4
D1035	13038CW-UK01	COLLAR	2
D1036	03022SC-4517	HEX. SOCKET SET SCREW(M4*L5)	4
D1037	08053PR-A001	LEVER WASHER	4
D1038	02023SC-7113	HEX.SOCKET BOLT(M4*L8)	2
D1039	18014SW-3115	SPRING WASHER (@4-NO2)	2

Ref. No	Part No.	Part Names	Q'ty
D1040	18015SW-3111	WASHER (4@)	2
D1041	13032GA-UK06	INDEX SHAFT GEAR UK06	1
D1042	04012AF-A001	HOOK SHAFT BUSH SCREW (15/64)	2
D1043	04026BR-A001	BALL BEARING 6003Z	1
D1044	01102000B000	COLLAR"B"	1
D1045	04016AF-A001	CAM COLLAR SCREW	2
D1046	04039PR-A001	BEARING COVER	1
D1047	13061SC-8119	PLUS SCREW (M3*L10)	3
D1048	03012000U000	LOW SHAFT SUPPORT BRACKET(L)	1
D1049	01029BR-A001	BALL BEARING 6004Z	2
D1050	08091SC-7113	HEX. SOCKET BOLT (M6*L20)	4
D1051	03026SW-9115	SPRING WASHER (@6)	4
D1052	08057SW-1111	WASHER (@6)	4
D1053	14058CW-A001	COLLAR "A"	1
D1054	14060AF-4517	HEX.SOCKET SCREW(M6*L6)	2
D1055	03000130U000	INDEX TIMMING PULLEY	1
D1056	14061AF-4517	HEX.SOCKET SCREW(M8*L8)	4
D1057	13053PR-UK01	ANGLE PLATE BASE	1
D1058	13061SC-8119	PLUS SCREW (M3*L10)	3
D1059	14006SC-7113	HEX.SOCKET SET SCREW(M8*L15)	1
D1060	15095SW-3115	SPRING WAHSER(@8)	1
D1061	04029SW-A001	STUD BOLT WASHER(S) (@8)	1
D1062	13054ET-UK01	ANGLE DISK(L)	1
D1063	03012200U000	INDICATOR	1
D1064	02015SC-7113	HEX.SOCKET BOLT(M4*L8)	2
D1065	18014SW-3115	SPRING WASHER (@4-NO2)	2
D1066	18015SW-3111	WASHER (4@)	2
D1067	03000300U000	IDLER	1
	13026BR-T121	NEEDLE BEARING (6002Z)	2
D1068	13120CW-UK01	IDLER SHAFT	1
D1069	13106PR-UK01	IDLER SPACER	1
D1070	14060AF-4517	HEX.SOCKET SCREW(M6*L6)	2
D1071	13107CW-UK01	COLLAR	1
D1072	14060AF-4517	HEX.SOCKET SCREW(M6*L6)	2
D1073	08027BR-A001	THRUST BEARING (NTB 1528)	2
D1074	08028BR-A001	THRUST WASHER (AS 1528)	4
D1075	03010800UH00	TOP SHAFT PULLEY	1
D1076	14060AF-4517	HEX.SOCKET SCREW(M6*L6)	4
D1077	03000900U000	TENSION ADJUSTING BLOCK	1
D1078	08062SC-7113	HEX. SOCKET BOLT (M5*L20)	2

D1 Main Drive System I

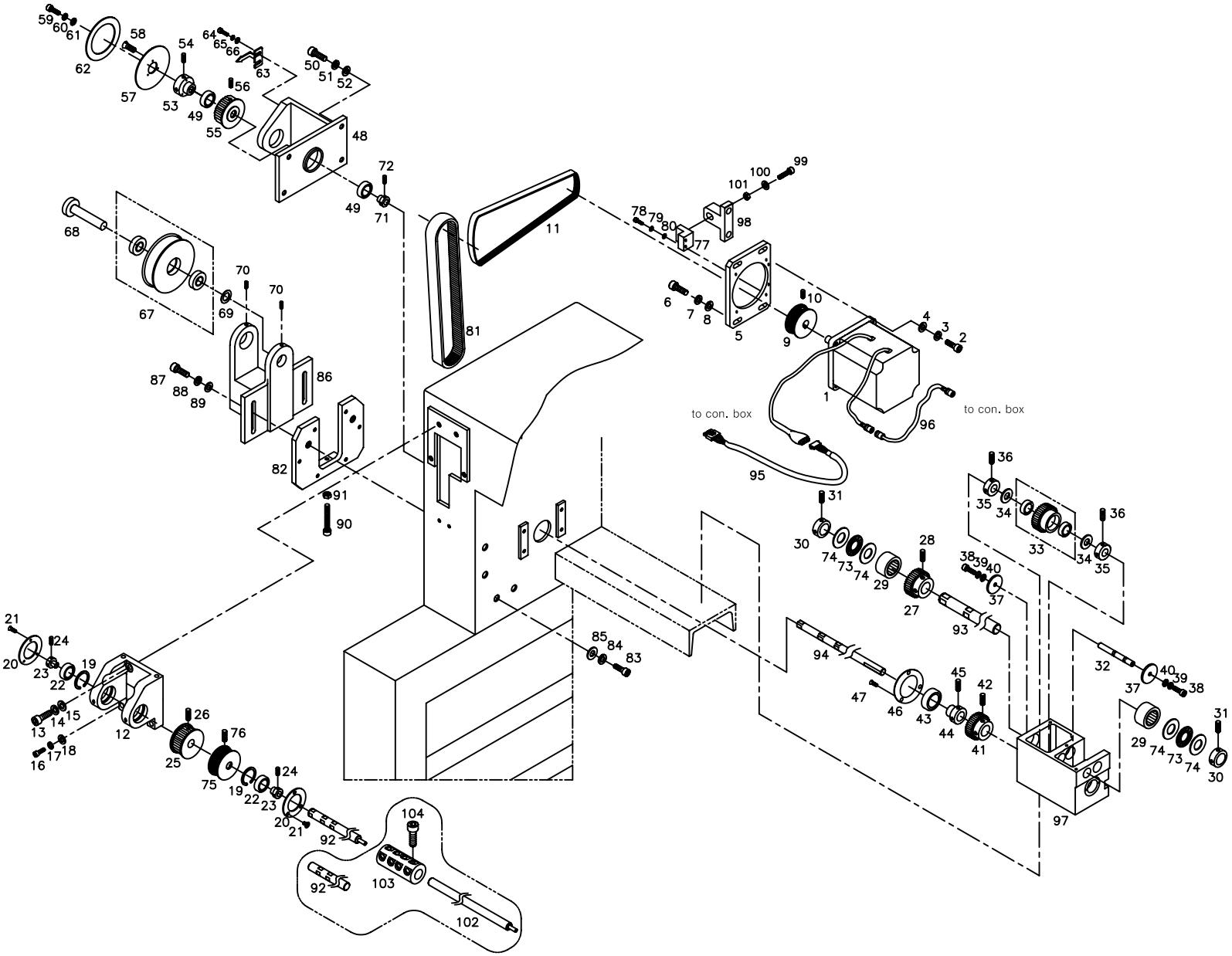

Ref.No	Part No.	Part Names		Q'ty
D1079	18048SW-3115	SPRING WASHER (5@)		2
D1080	18049SW-3111	WASHER (@5)		2
D1081	03000200U000	TIMING BELT (25-S5M*L1025)		1
D1082	13123CW-E121	IDELR PLATE		1
D1083	08091SC-7113	HEX. SOCKET BOLT (M6*L20)		6
D1084	03026SW-9115	SPRING WASHER (@6)		6
D1085	08057SW-1111	WASHER (@6)		6
D1086	13118CS-UK01	IDLER SUPPORT BRACKET		1
D1087	14027SC-4113	HEX.SOCKET BOLT (M8*L30)		2
D1088	15095SW-3115	SPRING WASHER(@8)		2
D1089	04029SW-A001	STUD BOLT WASHER(S) (@8)		2
D1090	14063SC-A001	TENSION CONTROL BOLT (M6*L40)		1
D1091	13042SN-1111	HEX.NUT (M6*T5-R)		1
D1092	GP-004935-00	TOP SHAFT A [1447.7mm]	UH1504D	1
	03000110UH60	TOP SHAFT A [1497.7mm]	UH1506D	
	GP-004151-00	TOP SHAFT A [1897.5mm]	UH1208D	
	GP-005072-00	TOP SHAFT A [1197.7mm]	UH1512D	
D1093	GP-004941-00	LOW SHAFT A [704mm]	UH1504D	1
	03000310UH60	LOW SHAFT A [1104mm]	UH1506D	
	GP-004153-00	LOW SHAFT A [1504mm]	UH1208D	
	02000110UH60	LOW SHAFT A [1104mm]	UH1512D	
D1094	03100600UH60	INDEX SHAFT A [428.5mm]		1
D1095	02106500UH80	Sh-65-5		1
D1096	02106400UH80	CABLE (Sh-64-5)		1
D1097	08023CS-UK01	Mes Cam Driving Box		1
D1098	03000900U060	TENSION ADJUSTING BLOCK		1
D1099	14063SC-A001	Tension Control Bolt (M6*L40)		1
D1100	08057SW-1111	Washer (@6)		1
D1101	08058SN-1311	Hex. Nut (M6-No3)		1
D1102	GP-005075-00	TOP SHAFT C [1309mm]	UH1512D	1
D1103	03006720HDK0	Coupling @20	UH1512D	1
D1104	08091SC-7113	Hex. Socket Bolt (M6*L20)	UH1512D	4

Ref. No	Part No.	Part Names	Q'ty

D2 Main Drive System II

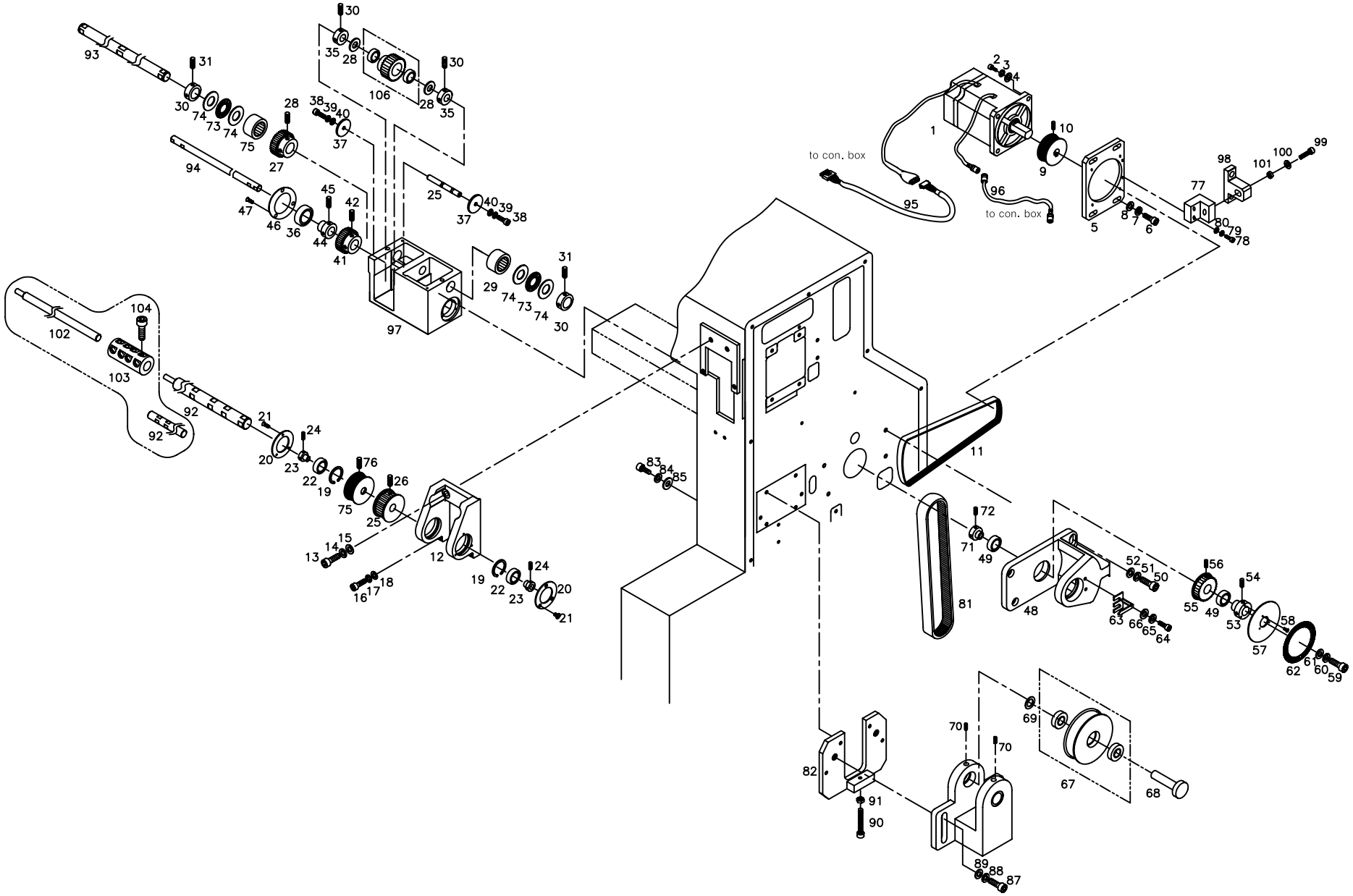

Ref.No	Part No.	Part Names	Q'ty
D2001	SFAM-600-300	MAIN MOTOR	1
D2002	15030SC-7113	HEX. SOCKET BOLT (M5*L30)	4
D2003	18048SW-3115	SPRING WASHER (5@)	4
D2004	18049SW-3111	WASHER (@5)	4
D2005	GP-012897-00	MOTOR FIXING	1
D2006	14046SC-7113	HEX.SOCKET BOLT (M6*L30)	4
D2007	03026SW-9115	SPRING WASHER (@6)	4
D2008	08057SW-1111	WASHER (@6)	4
D2009	03010800UH80	MAIN MOTOR PULLEY	1
D2010	04014SC-4517	HEX.SOCKET SET SCREW(M5*L5)	2
D2011	03100700UH80	MAIN DRIVING BELT 200J	1
D2012	03101400UH80	UPPER SHAFT SUPPORT BRACKET (R)	1
D2013	16009SC-4113	HEX.SOCKET BOLT(M10*L25)	2
D2014	01008SW-9115	SPRING WASHER(@10)	2
D2015	01007SW-1111	WASHER(@10)	2
D2016	08091SC-7113	HEX. SOCKET BOLT (M6*L20)	2
D2017	03026SW-9115	SPRING WASHER (@6)	2
D2018	08057SW-1111	WASHER (@6)	2
D2019	03010SR-4013	C-RING (@47)	2
D2020	03101400U000	UPPER SHAFT SUPPORT COVER	2
D2021	05007SC-7113	HEX. SOCKET BOLT (M3*L5)	6
D2022	01001100H000	BALL BEARING(6005ZZ)	2
D2023	03005210H000	COLLAR "A"	2
D2024	14060AF-4517	HEX.SOCKET SCREW(M6*L6)	2
D2025	03000120U000	TOP SHAFT TIMMING PULLEY	1
D2026	14060AF-4517	HEX.SOCKET SCREW(M6*L6)	4
D2027	13032GA-UK06	INDEX SHAFT GEAR UK06	1
D2028	04012AF-A001	HOOK SHAFT BUSH SCREW (15/64)	2
D2029	04027BR-A001	NEEDLE BEARING (HMK1515)	1
D2030	03704900A000	CAM SHAFT COLLAR	2
D2031	04016AF-A001	CAM COLLAR SCREW	4
D2032	13041SH-UK01	MIDDLE SHAFT	1
D2033	13034GA-UK06	MIDDLE SHAFT GEAR UK06	1
	13036BR-UK01	MIDDLE SHAFT GEAR NEEDLE BEARING(@10-@19)NNB	4
D2034	12019BR-T121	FIBER WASHER R-TW1020	4
D2035	13038CW-UK01	COLLAR	2
D2036	03022SC-4517	HEX. SOCKET SET SCREW(M4*L5)	4
D2037	08053PR-A001	LEVER WASHER	4
D2038	02023SC-7113	HEX.SOCKET BOLT(M4*L8)	2
D2039	18014SW-3115	SPRING WASHER (@4-NO2)	2

Ref. No	Part No.	Part Names	Q'ty
D2040	18015SW-3111	WASHER (4@)	2
D2041	13032GA-UK06	INDEX SHAFT GEAR UK06	1
D2042	04012AF-A001	HOOK SHAFT BUSH SCREW (15/64)	2
D2043	04026BR-A001	BALL BEARING 6003Z	1
D2044	01102000B000	COLLAR"B"	1
D2045	14060AF-4517	HEX.SOCKET SCREW(M6*L6)	2
D2046	04039PR-A001	BEARING COVER	1
D2047	13061SC-8119	PLUS SCREW (M3*L10)	3
D2048	03012000UH60	LOW SHAFT SUPPORT BRACKET (R)	1
D2049	01029BR-A001	BALL BEARING 6004Z	2
D2050	08091SC-7113	HEX. SOCKET BOLT (M6*L20)	4
D2051	03026SW-9115	SPRING WASHER (@6)	4
D2052	08057SW-1111	WASHER (@6)	4
D2053	14058CW-A001	COLLAR "A"	1
D2054	14060AF-4517	HEX.SOCKET SCREW(M6*L6)	2
D2055	03000130U000	INDEX TIMMING PULLEY	1
D2056	14061AF-4517	HEX.SOCKET SCREW(M8*L8)	4
D2057	13053PR-UK01	ANGLE PLATE BASE	1
D2058	13061SC-8119	PLUS SCREW (M3*L10)	3
D2059	14006SC-7113	HEX.SOCKET SET SCREW(M8*L15)	1
D2060	15095SW-3115	SPRING WAHSER(@8)	1
D2061	04029SW-A001	STUD BOLT WASHER(S) (@8)	1
D2062	03100100U000	ANGLE DISK (R)	1
D2063	03012200U000	INDICATOR	1
D2064	02015SC-7113	HEX.SOCKET BOLT(M4*L8)	2
D2065	18014SW-3115	SPRING WASHER (@4-NO2)	2
D2066	18015SW-3111	WASHER (4@)	2
D2067	03000300U000	IDLER	1
	13026BR-T121	NEEDLE BEARING (6002Z)	2
D2068	13120CW-UK01	IDLER SHAFT	1
D2069	13106PR-UK01	IDLER SPACER	1
D2070	14060AF-4517	HEX.SOCKET SCREW(M6*L6)	2
D2071	13107CW-UK01	COLLAR	1
D2072	14060AF-4517	HEX.SOCKET SCREW(M6*L6)	2
D2073	08027BR-A001	THRUST BEARING (NTB 1528)	2
D2074	08028BR-A001	THRUST WASHER (AS 1528)	4
D2075	03010800UH00	TOP SHAFT PULLEY	1
D2076	14060AF-4517	HEX.SOCKET SCREW(M6*L6)	4
D2077	03000900U000	TENSION ADJUSTING BLOCK	1
D2078	08062SC-7113	HEX. SOCKET BOLT (M5*L20)	2

D2 Main Drive System II

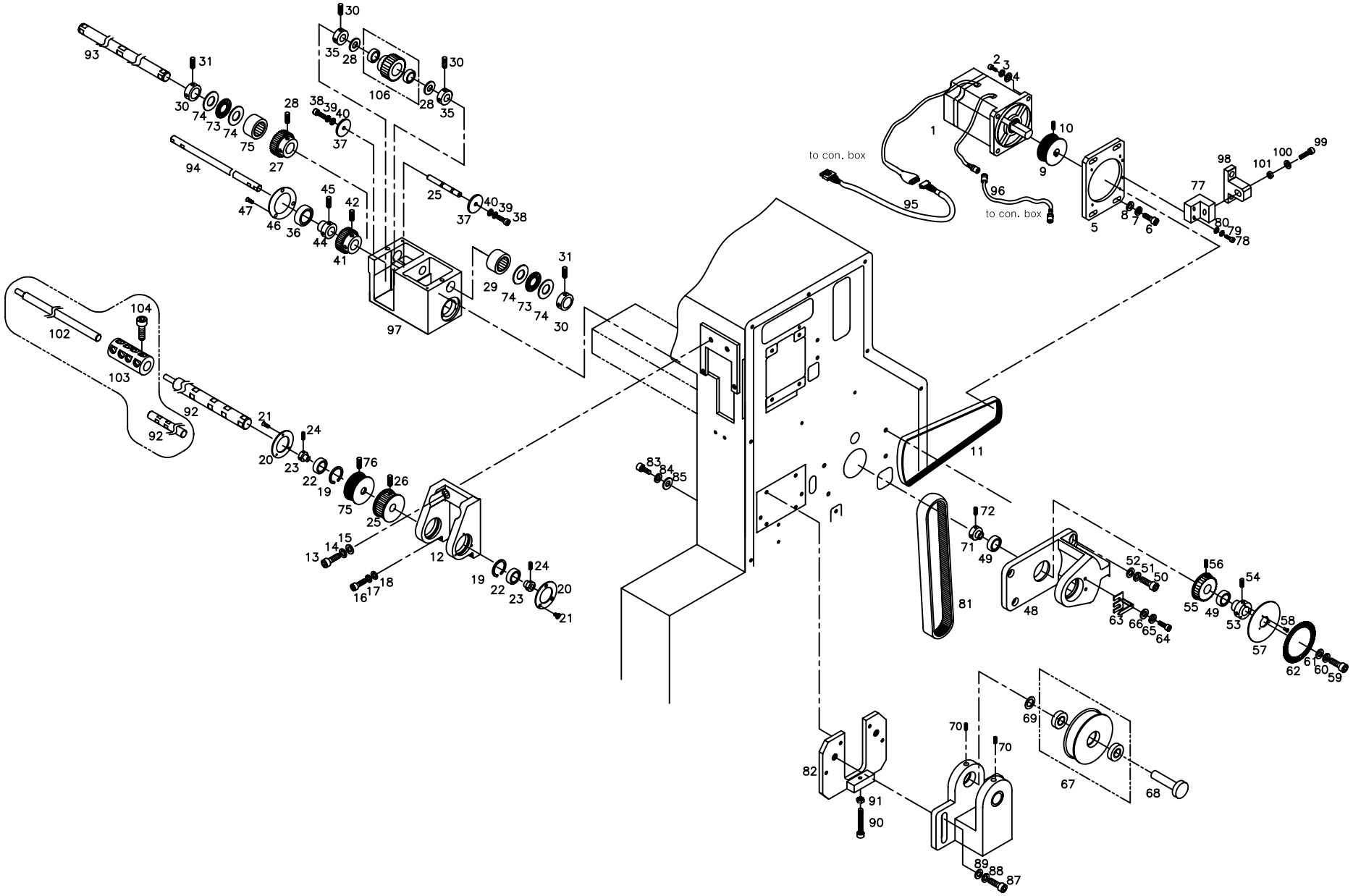

Ref. No	Part No.	Part Names		Q'ty
D2079	18048SW-3115	SPRING WASHER (5@)		2
D2080	18049SW-3111	WASHER (@5)		2
D2081	03000200U000	TIMING BELT (25-S5M*L1025)		1
D2082	13123CW-E121	IDELR PLATE		1
D2083	08091SC-7113	HEX. SOCKET BOLT (M6*L20)		6
D2084	03026SW-9115	SPRING WASHER (@6)		6
D2085	08057SW-1111	WASHER (@6)		6
D2086	13118CS-UK01	IDLER SUPPORT BRACKET		1
D2087	14027SC-4113	HEX.SOCKET BOLT (M8*L30)		2
D2088	15095SW-3115	SPRING WASHER(@8)		2
D2089	04029SW-A001	STUD BOLT WASHER(S) (@8)		2
D2090	14063SC-A001	TENSION CONTROL BOLT (M6*L40)		1
D2091	13042SN-1111	HEX.NUT (M6*T5-R)		1
D2092	GP-004936-00	TOP SHAFT B [1259.2mm]	UH1504D	1
	03000210UH60	TOP SHAFT B [1610mm]	UH1506D	
	GP-004152-00	TOP SHAFT B [2009.2mm]	UH1208D	
	GP-005074-00	TOP SHAFT B [1500mm]	UH1512D	
D2093	GP-004942-00	LOW SHAFT B [902.5mm]	UH1504D	1
	03000410UH60	LOW SHAFT B [1302.5mm]	UH1506D	
	GP-004154-00	LOW SHAFT B [1702.5mm]	UH1208D	
	GP-005077-00	LOW SHAFT B [1302.5mm]	UH1512D	
D2094	03100710UH60	INDEX SHAFT B[551mm]		1
D2095	02106500UH80	Sh-65-5		1
D2096	02106400UH80	CABLE (Sh-64-5)		1
D2097	03700300UH60	Mes Cam Driving Box C		1
D2098	03000900U060	TENSION ADJUSTING BLOCK		1
D2099	14063SC-A001	Tension Control Bolt (M6*L40)		1
D2100	08057SW-1111	Washer (@6)		1
D2101	08058SN-1311	Hex. Nut (M6-No3)		1
D1102	GP-005075-00	TOP SHAFT C [1309mm]	UH1512D	1
D1103	03006720HDK0	Coupling @20	UH1512D	1
D1104	08091SC-7113	Hex. Socket Bolt (M6*L20)	UH1512D	4

Ref. No	Part No.	Part Names	Q'ty

E1

Bed I

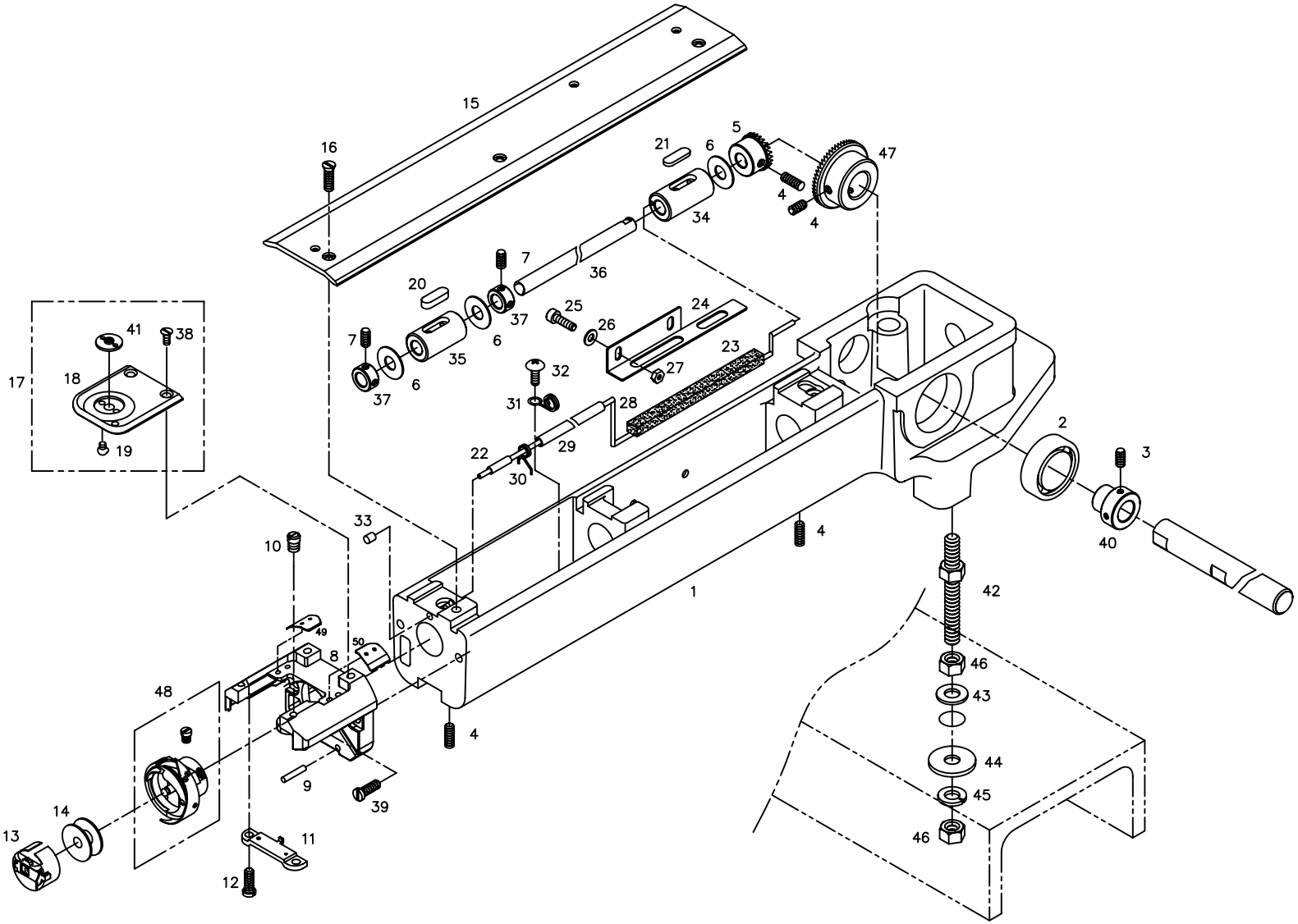
15
16
21
6
5
47
4
4
34
7
36
20
37
25
24
26
6
7
35
23
27
6
37
32
31
28
2
3
41
38
17
18
19
22
29
30
40
33
4
10
1
42
49
50
8
46
48
43
4
44
9
39
45
14
13
11
46
12

Ref.No	Part No.	Part Names	Q'ty
E1001	GP-005355-00	Bed "A"	6
E1002	04026BR-A001	Ball Bearing 6003Z	6
E1003	04016AF-A001	Cam Collar Screw	12
E1004	04012AF-A001	Hook Shaft Bush Screw	36
E1005	04019GA-UK01	Hook Shaft Gear	6
E1006	02004BR-T121	Hook Shaft Bearing Washer	18
E1007	08113SC-A001	Collar Screw	24
E1008	GP-005357-01	Needle Plate Bracket	6
E1009	02009PI-T121	Spring Pin	12
E1010	04026SC-T121	Needle Plate Pin	6
E1011	GP-005358-01	Rotary Hook Support	6
E1012	02011SC-3125	Rotary Hook Support Screw	12
E1013	04034AF-A001	Bobbin Case Set	6
E1014	04035AF-A001	Bobbin	6
E1015	GP-005359-01	Bed Cover	6
E1016	02030SC-T121	Bed Cover Screw(9/64" 40)	18
E1017	02019BM-T121	Needle Plate Set(Cap)	6
E1018	02019PR-T121	Needle Plate(Cap)	6
E1019	04007SC-A001	Cushion Cover Screw (M3*L2.3)	12
E1020	32043SF-T121	Front Bushing Felt	6
E1021	18039SF-UK01	Felt	6
E1022	32045CW-T121	Oil Hose Pin	6
E1023	18041SF-UK01	Bed Felt	6
E1024	32040PR-T121	Bed Felt Cover	6
E1025	02023SC-7113	Hex. Socket Bolt (M4*L8)	12
E1026	02063SW-1111	Washer(@4)	12
E1027	05016SN-1211	Hex.Nut (M4)	12
E1028	18044ET-UK01	Wick L=400	6
E1029	18045ET-UK01	Oil Hose L=160	6
E1030	32046SP-T121	Holder For Oil Hose	6
E1031	32021SP-T121	Needle Bar Hose Holder "B"	6
E1032	28021SC-3123	Truss Screw (M3*L4)	6
E1033	32047RB-T121	Oil Rubber Cap	6
E1034	GP-016953-00	Hook Shaft Rear Bushing	6
E1035	GP-016931-00	Hook Shaft Front Bushing	6
E1036	02100300U000	Hook Shaft	6
E1037	03707300A000	Solenoid Collar	12
E1038	04004AF-A001	Needle Plate Screw	12
E1039	04037SC-A001	Picker Bracket Screw(R)	12
E1040	01102000B000	Bearing Bushing	6

Ref. No	Part No.	Part Names	Q'ty
E1041	02022CW-T121	NEEDLE GUIDE PLATE(FLAT)	6
	GP-010385-00	NEEDLE GUIDE PLATE(FLAT Sequin)	6
E1042	04028SC-UK01	STUD BOLT (M10*P1.25*L69)	18
E1043	04013PR-B001	WASHER (3.2T-@10)	18
E1044	04014PR-B001	WASHER (2T-@10)	18
E1045	16029SW-3115	SPRING WASHER (10@)	18
E1046	04032SN-UK01	HEX. NUT (M10*P1.25)	36
E1047	01101700U000	LOW SHAFT GEAR	6
E1048	04033AF-D002	Rotary Hook Set	6
E1049	GP-012800-00	Needle Plate Guide(L)	6
E1050	GP-012801-00	Needle Plate Guide(R)	6

E2

Bed II

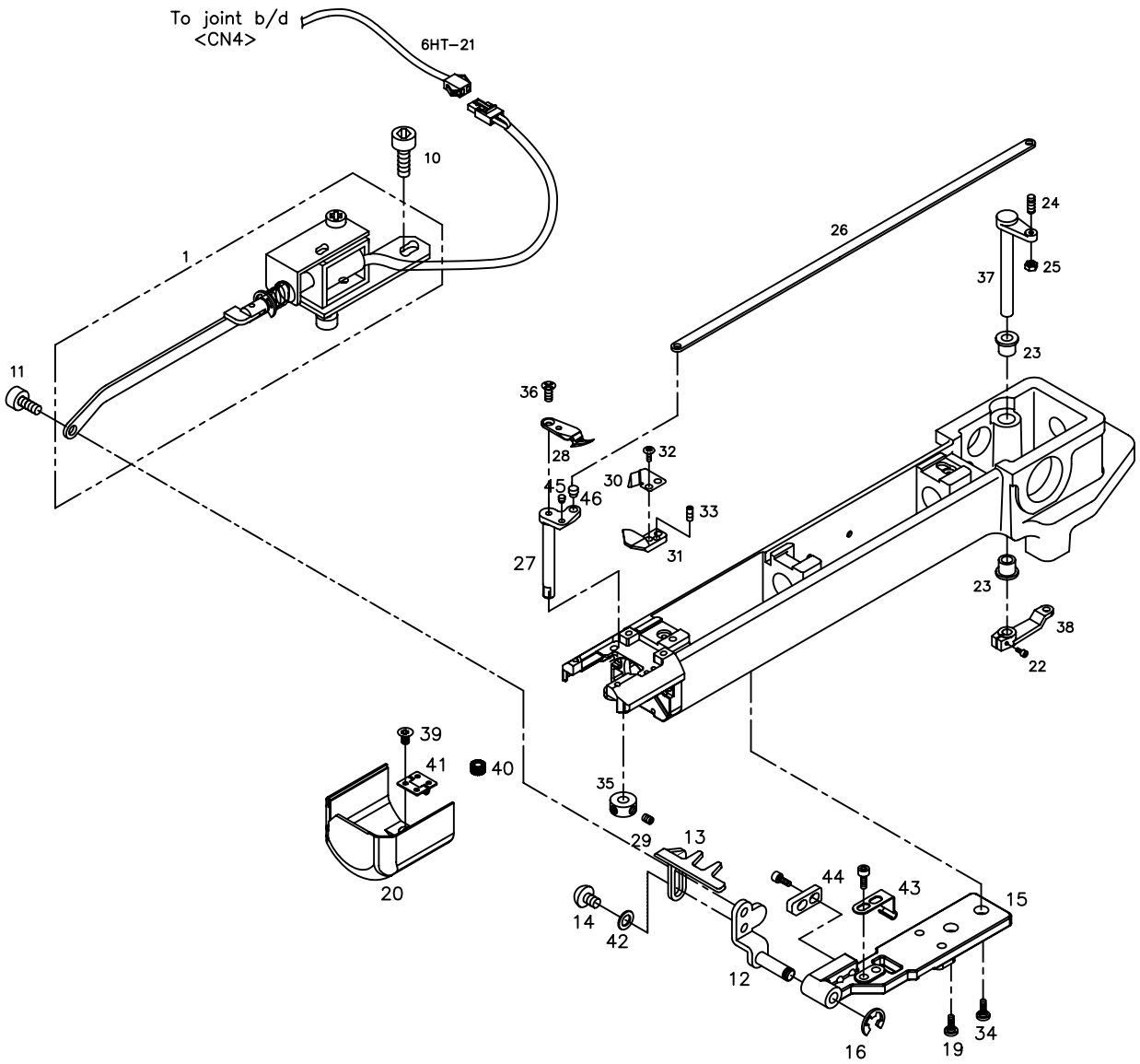
To joint b/d
<CN4>
6HT-21
10
1
11
26
24
25
37
23
36
28
32
30
45
46
33
31
27
23
38
22
39
41
40
35
29
13
44
43
15
20
14
42
12
16
19
34

Ref.No	Part No.	Part Names	Q'ty
E2001	AS-003154-00	PICKER SOLENOID	6
E2010	02015SC-7113	Hex.Socket Bolt(M4*L10)	12
E2011	08012CW-T121	Connecting Plate Stud Screw	6
E2012	AS-001429-00	Picker Base Ass'Y	6
E2013	GP-005368-00	Picker	6
E2014	07018SC-8118	Plus Screw (M3*L8)	12
E2015	GP-005366-00	Picker Bracket	6
E2016	15159SR-4013	E-Ring (3@)	6
E2019	116410S-8118	Driver Screw 11/64-40,L10	6
E2020	GP-005360-01	Hook Cover	6
E2022	02015SC-7113	Hex.Socket Bolt(M4*L10)	6
E2023	07021MP-T121	Lever Shaft Bush	12
E2024	07023CW-T121	Lever Pin "A"	6
E2025	02029SN-9311	Hex. Nut (M4-No2)	6
E2026	07006LA-UK01	Mes Connecting Link	6
E2027	GP-006638-00	Moving Mes Shaft	6
E2028	07028PR-T121	Moving Mes	6
E2029	03022SC-4517	Hex. Socket Set Screw(M4*L5)	12
E2030	07032CL-T121	Fixed Mes	6
E2031	07033PR-T121	Under Thread Presser	6
E2032	07018SC-8118	Plus Screw (M3*L8)	12
E2033	03050SC-4517	Hex. Socket Set Screw (M3*L3)	6
E2034	116410S-8118	Driver Screw 11/64-40,L10	6
E2035	13003000T000	Mes Shaft Collar	6
E2036	08014SC-A001	Plus Screw (M3*L8)	6
E2037	03001100U000	Mes Driving Lever Shaft "A"	6
E2038	02100400U000	Mes Driving Lever	6
E2039	08014AF-A001	Plus Screw (M3*L8)	12
E2040	GP-005361-00	Hook Cover Insert	12
E2041	HG-000001-00	Hook Cover Hinge	6
E2042	WS-000085-00	Washer for Picker Base	6
E2043	GP-005362-00	Hook Cover Holder	6
E2044	GP-005369-01	Picker Stopper	6
E2045	08122CW-A001	MES PIN	6
E2046	08123CW-T121	MOVING MES CONNECTING LINK PIN	6

Ref. No	Part No.	Part Names	Q'ty

E3

Bed III (UH1208D,UH1512D)

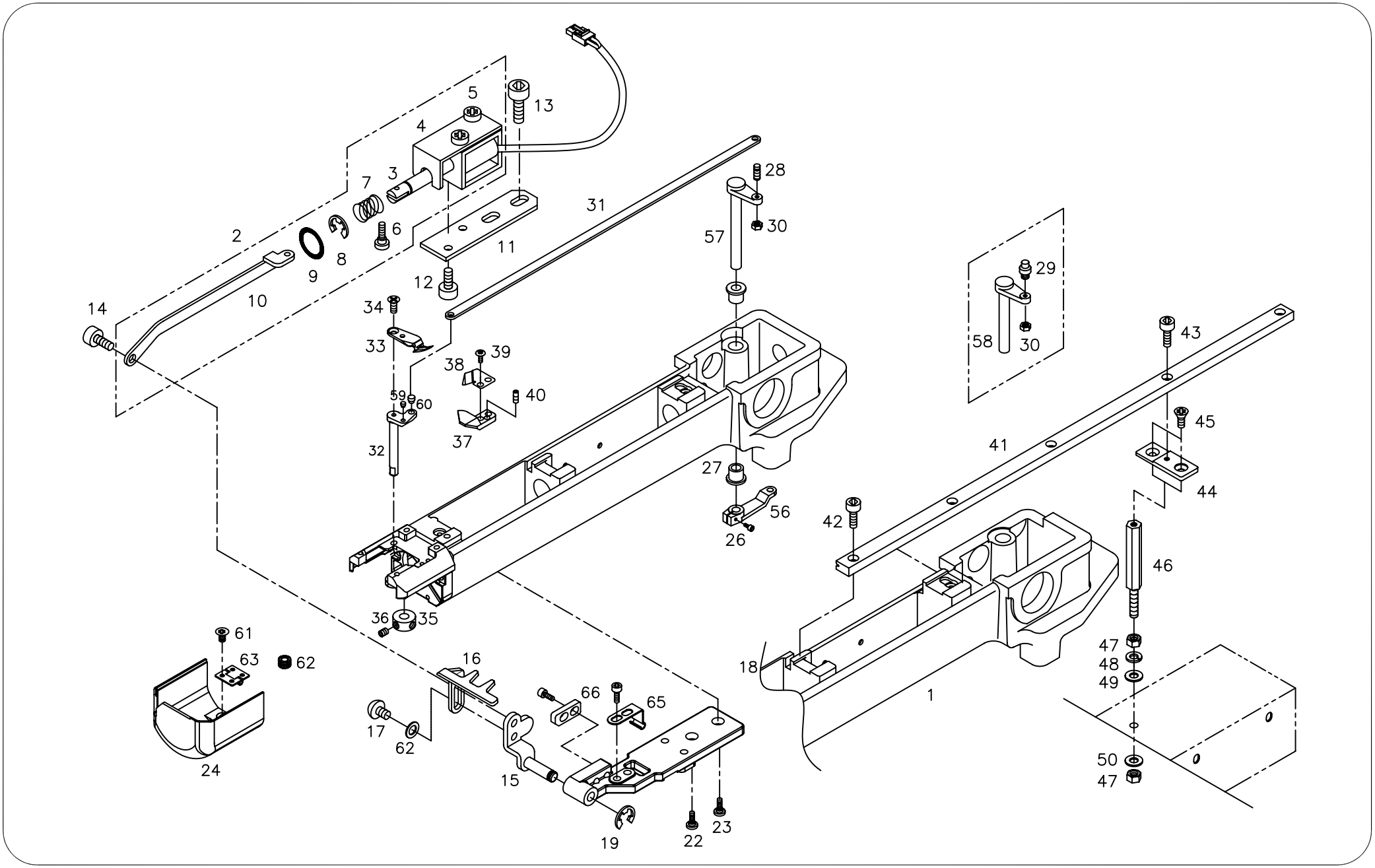

Ref.No	Part No.	Part Names	Q'ty
E3001	01200100UH00	Bed	2
E3002	10009EL-A004	Picker Sol. Set	8
E3003	10009EL-T121	Picker Sol.	8
E3004	01-012A-AT10	Picker Sol. Cover	8
E3005	28021SC-3123	Truss Screw (M3*L4)	8
E3006	10021SC-A001	Sol. Stud Screw	8
E3007	10011SP-A001	Sol. Spring	8
E3008	13044SR-4013	E-Ring (@4)	8
E3009	10012RB-A001	Cushion Washer	8
E3010	01-011A-AT10	Connecting Plate	8
E3011	01-013A-AT10	Picker Sol. Base	8
E3012	06010AF-8118	Plus Screw(M3*L4)	16
E3013	02015SC-7113	Hex.Socket Bolt(M4*L10)	16
E3014	08012CW-T121	Connecting Plate Stud Screw	8
E3015	AS-001429-00	Picker Base Ass'Y	8
E3016	GP-005368-00	Picker	8
E3017	07018SC-8118	Plus Screw (M3*L8)	16
E3018	GP-005366-00	Picker Bracket	8
E3019	15159SR-4013	E-Ring (3@)	8
E3022	116410S-8118	Driver Screw 11/64-40,L10	8
E3023	116410S-8118	Driver Screw 11/64-40-L10	8
E3024	GP-005360-01	Hook Cover	8
E3026	02015SC-7113	Hex.Socket Bolt(M4*L10)	8
E3027	07021MP-T121	Lever Shaft Bush	16
E3028	07023CW-T121	Lever Pin "A"	8
E3029	08122CW-UK01	Lever Pin "B"	2
E3030	02029SN-9311	Hex. Nut (M4-No2)	8
E3031	07006LA-UK01	Mes Connecting Link	8
E3032	07026FU-T121	Moving Mes Shaft	8
E3033	07028PR-T121	Moving Mes	8
E3034	08014SC-A001	Plus Screw (M3*L8)	8
E3035	13003000T000	Mes Shaft Collar	8
E3036	03022SC-4517	Hex. Socket Set Screw(M4*L5)	16
E3037	07032CL-T121	Fixed Mes	8
E3038	07033PR-T121	Under Thread Presser	8
E3039	07018SC-8118	Plus Screw (M3*L8)	16
E3040	03050SC-4517	Hex. Socket Set Screw (M3*L3)	8
E3041	GP-004139-00	Rail Guide	2
E3042	02015SC-7113	Hex.Socket Bolt(M4*L10)	6
E3043	02023SC-7113	Hex. Socket Bolt (M4*L8)	4

Ref. No	Part No.	Part Names	Q'ty
E3044	04053PR-UK01	Rail Support Plate	4
E3045	06020MC-8119	PLUSS SCREW (M6*L20)	8
E3046	16021CW-A001	Table Support Stud	8
E3047	04032SN-A001	Hex. Nut (M8-No2)	16
E3048	15095SW-3115	Spring Washer (@8)	8
E3049	04029SW-A001	Stud Bolt Washer(S) (@8)	8
E3050	04030SW-A001	Stud Bolt Washer(L) (@8)	8
E3056	02100400U000	Mes Driving Lever	8
E3057	GP-006638-00	Moving Mes Shaft	6
E3058	03001200U000	Mes Driving Lever Shaft "B"	2
E3059	08122CW-A001	MES PIN	6
E3060	08123CW-T121	MOVING MES CONNECTING LINK PIN	6
E3061	08014AF-A001	Plus Screw (M3*L8)	16
E3062	GP-005361-00	Hook Cover Insert	16
E3063	HG-000001-00	Hook Cover Hinge	8
E3064	WS-000085-00	Washer for Picker Base	8
E3065	GP-005362-00	Hook Cover Holder	8
E3066	GP-005369-01	Picker Stopper	8

F

Thread Cutting Drive System

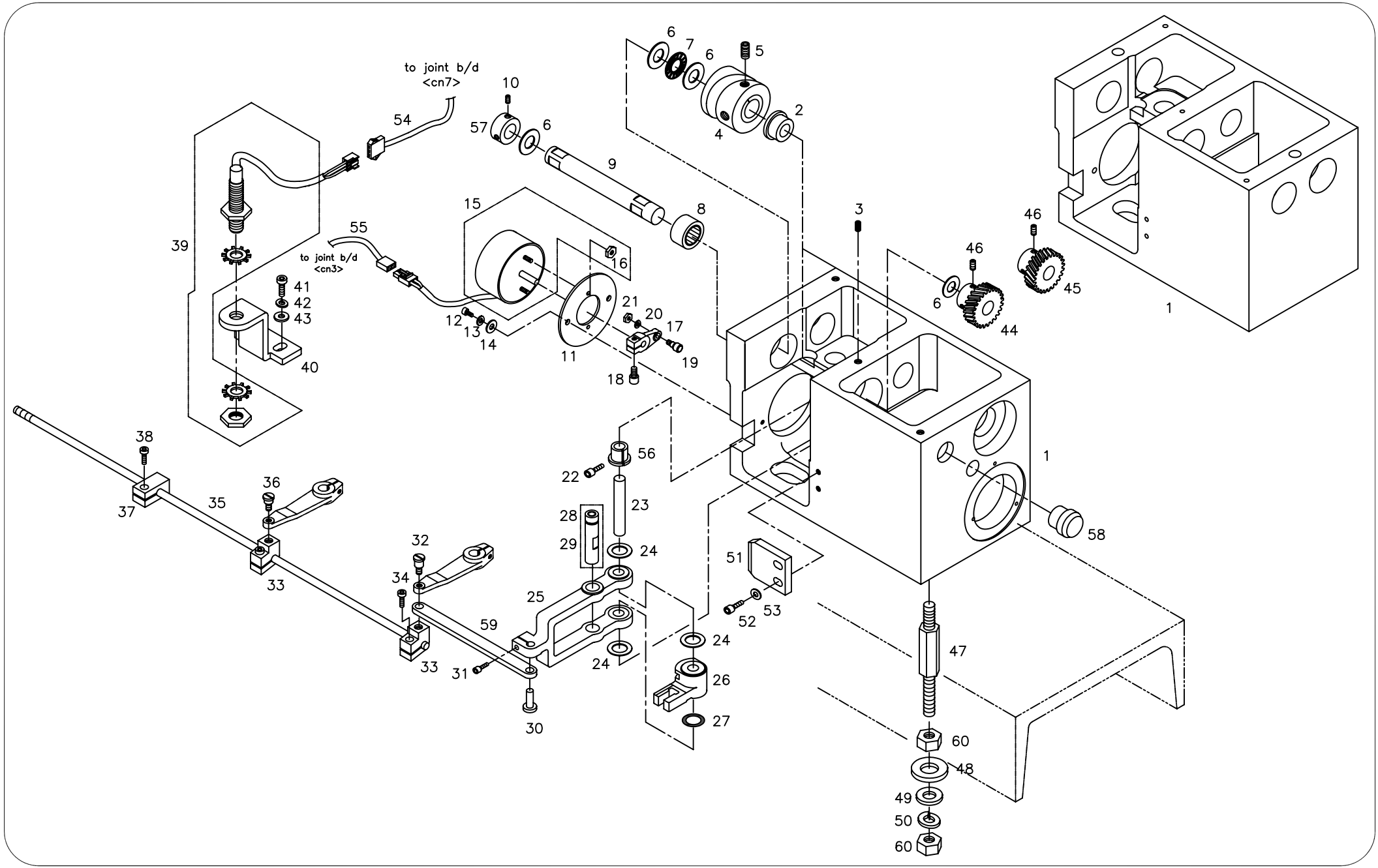

Ref.No	Part No.	Part Names		Q'ty
F-001	GP-011445-00	Mes Cam Driving Box (A)		1
	GP-011444-00	Mes Cam Driving Box (B)		1
F-002	08042MP-UK01	Mes Cam Shaft Bush		2
F-003	04014SC-4517	Hex. Socket Set Screw(M4*L5)		2
F-004	07034CM-UK01	Mes Cam		2
F-005	04016AF-A001	Cam Collar Screw		4
F-006	08028BR-A001	Thrust Washer (As 1528)		8
F-007	08027BR-A001	Thrust Bearing (Ntb 1528)		2
F-008	04027BR-A001	Needle Bearing (Hmk1515)		2
F-009	07038CW-UK01	Mes Cam Shaft		2
F-010	04016AF-A001	Cam Collar Screw		8
F-011	07015PR-UK01	Solenoid Plate		2
F-012	02031SC-7113	Hex. Socket Screw(M5*L10)		4
F-013	18048SW-3115	Spring Washer (5@)		4
F-014	18049SW-3111	Washer (@5)		4
F-015	08068EL-UH36	T/T SOLENOID (DUAL)		2
F-016	11014SN-1211	Hex.Nut (M3-No2)		4
F-017	07017CL-UK01	Solenoid Crank		2
F-018	03071SC-7113	Hex. Socket Bolt (M3*L10)		2
F-019	08048AF-T121	Solenoid Crank Roller		2
F-020	18014SW-3115	Spring Washer (@4-No2)		2
F-021	08050SN-T121	Hex. Nut		2
F-022	02014SC-7113	Hex. Socket Bolt (M4*L5)		2
F-023	07025CW-UK01	Lever Shaft (@8*L70)		2
F-024	07024BR-UK01	Fiber Washer(R-Tw0815)		6
F-025	07028CL-UK01	Mes Driving Lever		2
F-026	07029CL-UK01	Mes Driving Crank		2
F-027	08022RB-T121	O-Ring (@10)		2
F-028	07030AF-UK01	Roller		2
F-029	07026CW-UK01	Roller Shaft		2
F-030	08034CW-UK01	Lever Connecting Pin		2
F-031	04010MC-7113	Hex.Socket Bolt (M4*L10)		2
F-032	08016CW-UK01	Link Stud Bolt		2
F-033	08023CL-UK01	Mes Shaft Cramp		6
F-034	02015SC-7113	Hex.Socket Bolt(M4*L10)		6
F-035	GP-004934-00	Mes Driving Shaft "A" L=418	UH1504D	2
	03700100UH60	Mes Driving Shaft "A" L=818	UH1506D	
	GP-004155-00	Mes Driving Shaft "A" L=1215.5	UH1208D	
	02000300UH60	Mes Driving Shaft "A" L=2015.5	UH1512D	
F-036	08019CW-UK01	Clamp Stud Bolt		4

Ref. No	Part No.	Part Names	Q'ty
F-037	08023CW-A001	Mes Shaft Cramp	2
F-038	02015SC-7113	Hex.Socket Bolt(M4*L10)	2
F-039	08102EL-A001	Zero Point Sensor Ass'Y	2
F-040	08070PR-UK01	Sensor Bracket	2
F-041	02031SC-7113	Hex. Socket Screw(M5*L10)	4
F-042	18014SW-3115	Spring Washer (@4-No2)	4
F-043	18049SW-3111	Washer (@5)	4
F-044	07041GA-UK01	Gear "A"	2
F-045	07043GA-UK01	Gear "B"	2
F-046	04012AF-A001	Hook Shaft Bush Screw	8
F-047	08025CW-UK01	Box Stud Bolt	6
F-048	04030SW-A001	Stud Bolt Washer(L) (@8)	6
F-049	04029SW-A001	Stud Bolt Washer(S) (@8)	6
F-050	15095SW-3115	Spring Washer (@8)	6
F-051	08021PM-UK01	Lever Stopper	2
F-052	02015SC-7113	Hex.Socket Bolt(M4*L10)	4
F-053	18015SW-3111	Washer (4@)	4
F-054	25039EL-UK06	Cable (25-39)	2
F-055	25023EL-UK06	Cable (25-23)	2
F-056	08203000A000	Take-Up Lever Shaft Bush(L)	2
F-057	03704900A000	Cam Shaft Collar	2
F-058	08071RB-UK01	Thread Driver Box Ruber	2
F-059	03000700TH00	Thread Lever Connect Link	2
F-060	04032SN-A001	Hex. Nut (M8-No2)	12

G1

Arm I

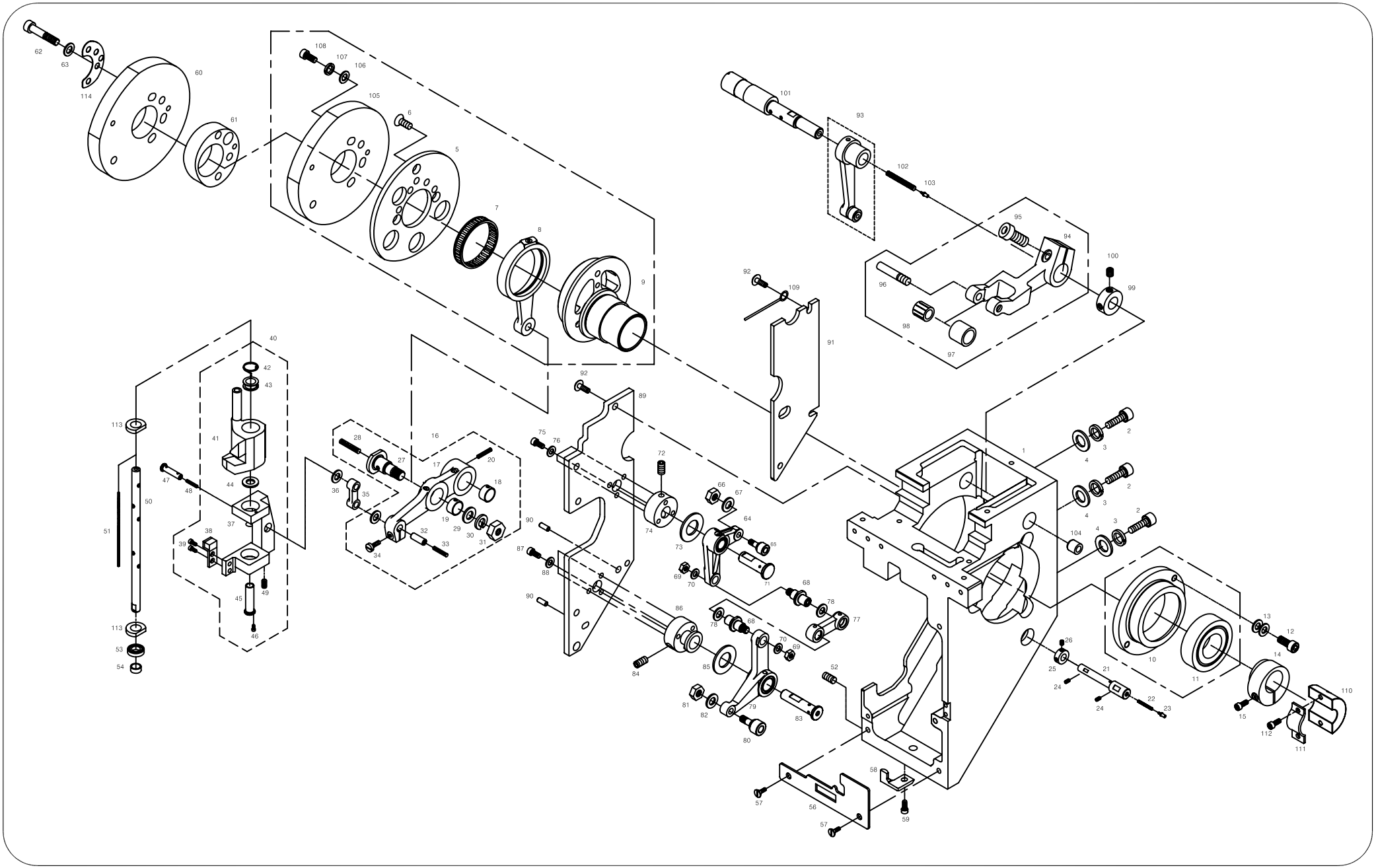
62
63
114
60
61
108
107
106
105
6
5
7
8
9
101
93
102
103
95
94
100
99
96
98
97
92
109
91
40
42
43
113
41
47
48
44
50
51
37
38
39
49
45
46
113
53
54
28
27
16
17
20
18
36
35
19
29
30
31
32
33
34
92
89
75
76
72
74
73
66
67
64
65
71
90
87
88
69
70
68
78
77
86
76
68
70
69
84
85
52
81
82
79
83
80
58
57
56
59
57
1
2
3
4
2
3
4
2
3
4
104
10
11
13
12
14
26
25
21
24
24
22
23
15
112
111
110

Ref.No	Part No.	Part Name	Q'ty
G1001	03300020U000	Arm	6
G1002	03003SC-4113	Hex. Socket Bolt	18
G1003	15095SW-3115	Spring Washer (@8)	18
G1004	04029SW-A001	Stud Bolt Washer(S) (@8)	18
G1005	GP-005992-00	Cam Base	6
G1006	03007SC-A001	Cam Base Screw	18
G1007	03300210H000	Needle Cage	6
G1008	03303000H000	Connecting Rod	6
G1009	GP-005990-00	NEEDLE BAR DRIVING CAM	6
G1010	03303100H000	Bearing Case A @20	6
G1011	01001100H000	Ball Bearing (6005Zz)	6
G1012	02031SC-7113	Hex. Socket Screw(M5*L10)	6
G1013	02030SW-B001	Washer (5@)	36
G1014	03000110H000	Cam Tightening Collar (@20)	6
G1015	03016SC-4113	Hex. Socket Bolt (M5*L15)	6
G1016	03313200H000	NEEDLE BAR DRIVE LEVER	6
G1017	03303200H000	NEEDLE BAR DRVING LEVER	6
G1018	03307200A000	Needle Driving Lever Bushing	6
G1019	03307300A000	Needle Driving Lever Bushing	6
G1020	32003ET-T121	Wick	6
G1021	03301800U000	NEEDLE BAR DRIVE PIN	6
G1022	32003ET-T121	Wick	6
G1023	01301600H000	Hook Oil Supply Nipple	12
G1024	03020SC-A001	Drive Pin Screw 11/64-N40-L8	6
G1025	01101300A000	Hook Shaft Collar	12
G1026	04012AF-A001	Hook Shaft Bush Screw	6
G1027	03023SC-A001	Connecting Rod Stud	6
G1028	32003ET-T121	Wick	6
G1029	03025SW-1211	Washer (@6)	6
G1030	03026SW-9115	Spring Washer (@6)	6
G1031	03027SN-A001	Stud Nut	6
G1032	03303300H000	Lever Pin	6
G1033	32003ET-T121	Wick	6
G1034	02015SC-7113	Screw(M4*L10)	6
G1035	03003200A000	Needle Bar Drive Rink	6
G1036	03034SW-A001	Reciprocator Washer	6
G1037	03600100I000	Needle Bar Driving Shaft Driver	6
G1038	03047PM-CT01	Stopper-A'ssy	6
G1039	26006MC-8118	Stopper Screw (M2.6*L6)	12
G1040	03600000I000	Needle Bar Reciprocator A'ssy	6

Ref. No	Part No.	Part Name	Q'ty
G1041	03600200I000	Needle Bar Reciprocator	6
G1042	03045SP-B001	Jump Spring	6
G1043	03046CW-B001	Jump Spring Guide	6
G1044	03048SW-A001	Reciprocator Washer	6
G1045	03304710A000	NEEDLE BAR DRIVING SHAFT BUSH	6
G1046	09005SC-3123	Truss Screw (M3*L6)	6
G1047	03033CW-A001	Driver Pin	6
G1048	32003ET-T121	Wick	6
G1049	03020SC-A001	Drive Pin Screw 11/64-N40-L8	6
G1050	03007900H000	Needle Bar Driving Shaft	6
G1051	32003ET-T121	Wick	6
G1052	03020SC-A001	Drive Pin Screw 11/64-N40-L8	6
G1053	03008000H000	Ball Bearing 6800	6
G1054	03008100K000	Needle Bar Drive Bearing Bush	6
G1056	03302600I000	Arm Bearing Guide Plate	6
G1057	05062SC-A001	Bolt (9/64" n=40)	12
G1058	03056CL-B001	Head Rail Holder	6
G1059	03057SC-A001	Head Rail Holder Screw	6
G1060	GP-014102-01	PRESSER FOOT DRIVING CAM	6
G1061	03301000I000	Csm Spacer	6
G1062	SC-000284-00	SCREW FOR DRIVING LEVER	18
G1063	WS-000082-00	PRESSER FOOT DRIVING CAMWASHER	18
G1064	GP-005993-00	Presser Foot Driving Lever (A) Assy'	6
G1065	AS-002151-00	Presser Foot Driving Roller Hinge Pin Assy'	6
G1066	15029SN-3211	Nut (@4)	6
G1067	18015SW-3111	Washer (@4)	6
G1068	03800300I000	Presser Foot Driving Lever Pin (C)	6
G1069	03031SN-A001	Nut (11/64" n=40)	6
G1070	18048SW-3115	Washer	6
G1071	PN-000165-00	Presser Foot Driving Lever Pin (A)	6
G1072	14060AF-4517	Hex. Socket Bolt (M6*L6)	6
G1073	02004BR-T121	Hook Shaft Bearing Washer	6
G1074	03800500I000	Presser Foot Driving Lever Bracket (A)	6
G1075	09007SC-7113	Hex. Socket Bolt (M3*L12)	18
G1076	11019SW-9115	Washer (@3)	18
G1077	03800600I000	Presser Foot Drving Lever Connecting Link	6
G1078	03034SW-A001	Washer	12
G1079	GP-006079-00	Presser Foot Driving Lever (B) Assy'	6
G1081	15029SN-3211	Nut (@4)	6
G1082	18015SW-3111	Washer (@4)	6

G1

Arm I

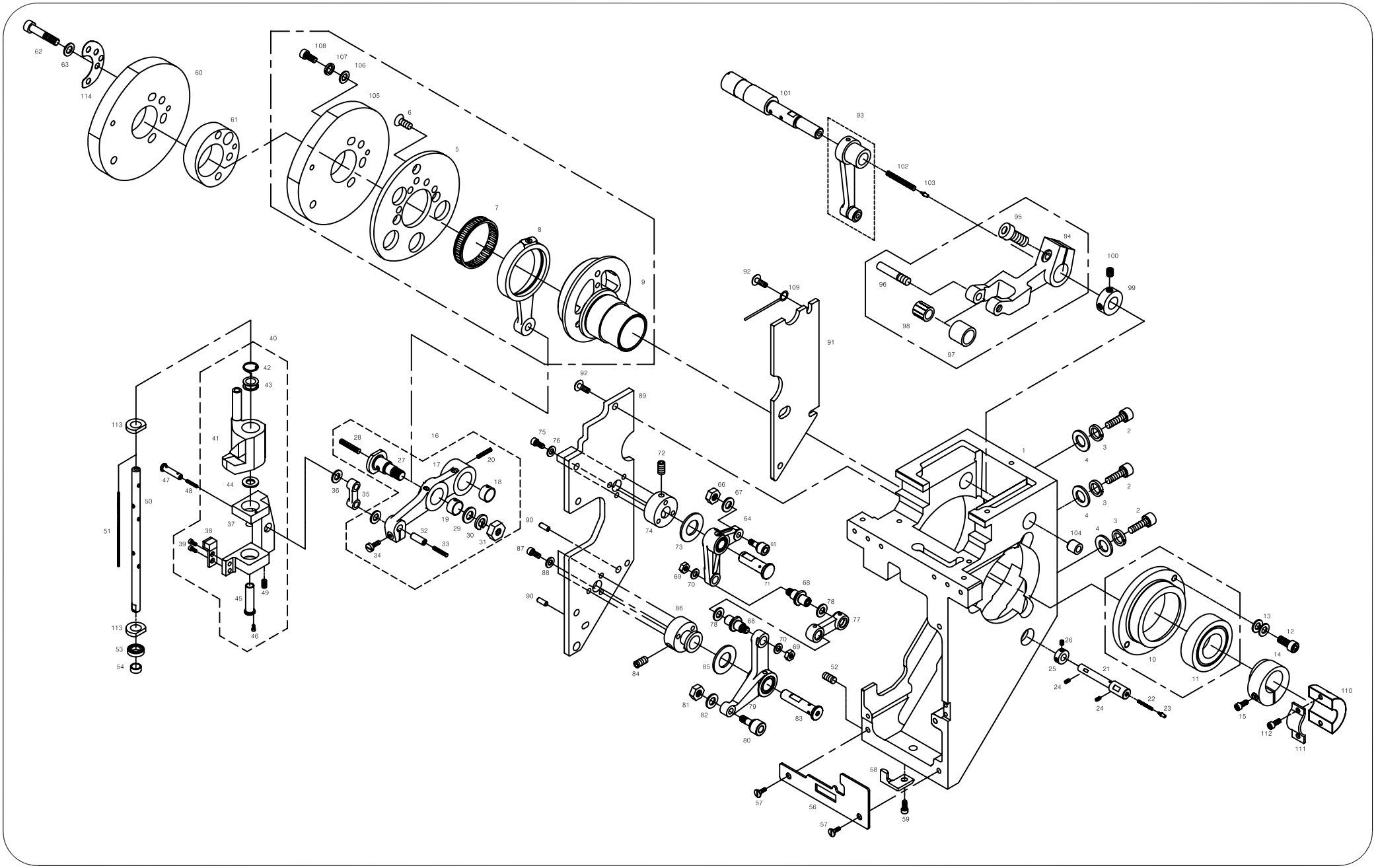
62
63
114
60
61
108
107
106
105
6
5
7
8
9
101
93
102
103
95
94
100
99
96
98
97
92
109
91
40
42
43
113
41
47
48
44
50
51
37
38
39
49
45
46
113
53
54
28
27
16
17
20
18
36
35
19
29
30
31
32
33
34
92
89
75
76
72
74
73
66
67
64
65
71
90
87
88
69
70
68
78
77
86
76
68
70
69
84
85
52
81
82
79
83
80
58
57
56
59
57
1
2
3
4
2
3
4
2
3
4
104
10
11
13
12
14
26
25
21
24
24
22
23
15
112
111
110

Ref.No	Part No.	Part Name	Q'ty
G1083	PN-000166-00	Presser Foot Driving Lever Pin (B)	6
G1084	14060AF-4517	Hex. Socket Bolt (M6*L6)	6
G1085	02004BR-T121	Washer	6
G1086	03801000I000	Presser Foot Driving Lever Bracket (B)	6
G1087	09007SC-7113	Hex. Socket Bolt (M3*L12)	18
G1088	06011SW-2111	Washer (@3)	18
G1089	03302200I000	Arm Side Cover(A)	6
G1090	03302300I000	Base Pin for Arm Side Cover	12
G1091	03302310H000	Side Cover "B1" @20	6
G1092	02010SC-A001	SCREW (9/64-N40-L8)	42
G1093	03314100A000	Take-Up Driving Lever "A"	6
G1094	07018CA-UK01	Take-Up Driving Lever "B"	6
G1095	07016SC-7113	Hex.Socket Bolt(M4*L12)	6
G1096	04019CW-T121	Pin Stud Screw	6
G1097	04020AF-T121	Roller for Take-Up Lever B	6
G1098	04021BR-T121	Needle Bearing (KT367N IKO)	6
G1099	03302100A000	Pin Collar	6
G1100	03022SC-4517	Hex.Socket Set Screw(M4*L5)	12
G1101	PN-000154-00	Take-Up Lever Drive Pin	6
G1102	32003ET-T121	Wick	6
G1103	01301600H000	Hook Oil Supply Nipple	6
G1104	03301200A000	Bushing	6
G1105	03300700I000	Take-Up Lever Driving Cam	6
G1106	06003SW-2111	Washer (@4)	6
G1107	06003SW-2111	Washer (@4)	12
G1108	02023SC-7113	Hex. Socket Bolt (M4*L8)	12
G1109	03062ET-A001	Cable Fastener	6
G1110	03008700H000	Balunce Cam	6
G1111	03008800H000	Balunce Cam Bracket	6
G1112	18047SC-7113	Hex. Socket Bolt (M5*L15)	12
G1113	03042SF-T121	FELT "A"	12
G1114	WS-000081-00	PRESSER FOOT DRIVING CAM WASHER	6
G1115	PN-000185-00	Presser Foot Stopper Roller Hinge Pin	6
G1116	GP-011031-00	Presser Foot Stopper Roller	6
G1117	WS-000108-00	Presser Foot Stopper Roller Washer	6

Ref. No	Part No.	Part Names	Q'ty

G2

Arm II

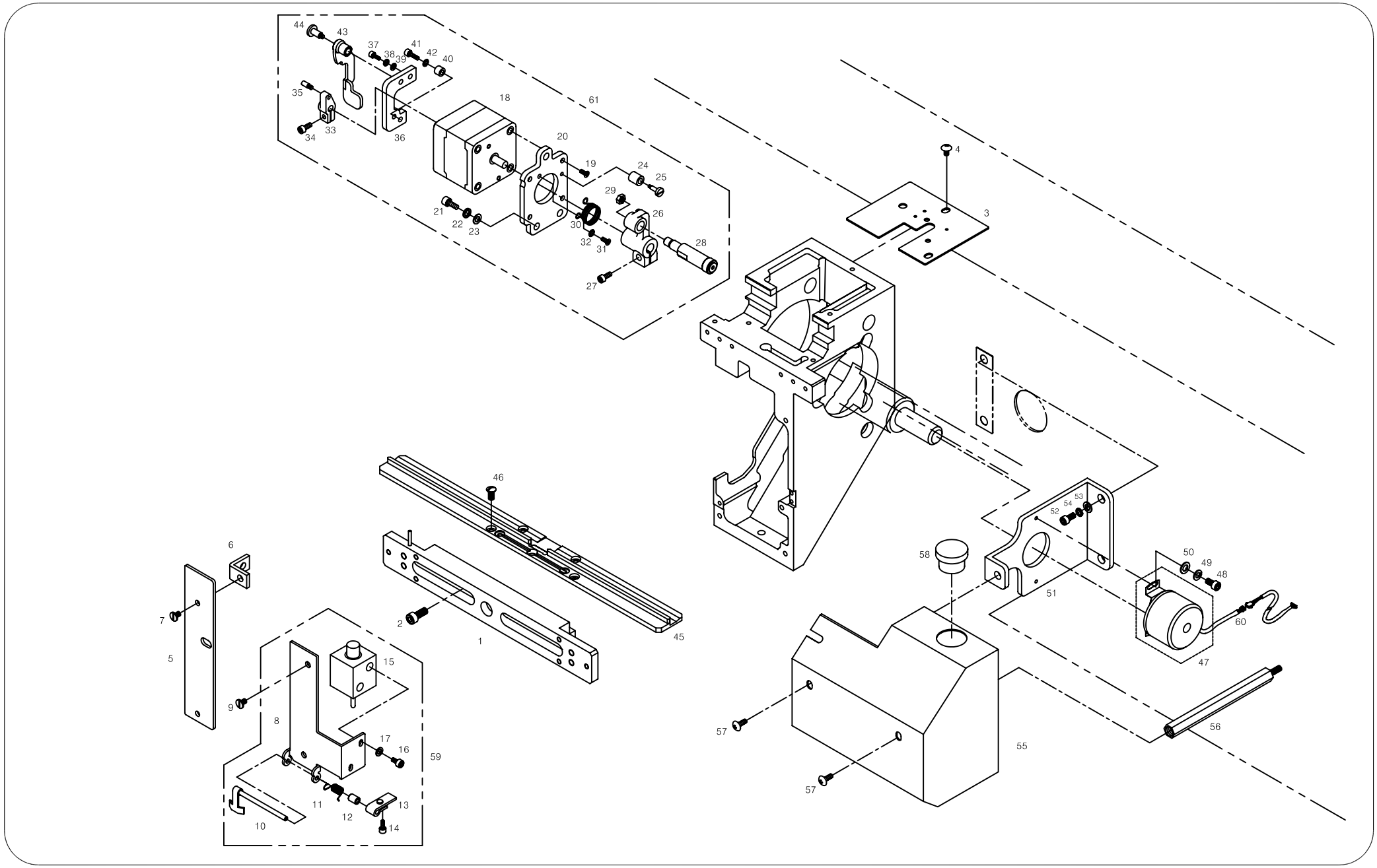
44
43
37
38
39
41
42
40
35
34
33
36
18
61
20
19
24
25
29
26
21
22
23
30
32
31
28
27
4
3
46
6
7
5
2
1
45
15
9
8
17
16
59
11
12
13
10
14
58
53
54
52
51
50
49
48
60
47
57
55
56
57

Ref.No	Part No.	PartNames		Q'ty
G2001	03069LM-B002	Lm Guide Block Set	(9C)	6
	03068LM-BB00	Lm Guide Block Set	(12C)	6
	03068LM-H003	Lm Guide Block Set	(15C)	6
G2002	03071SC-A001	Hex.Scoket Bolt (M3*L15)		6
G2003	GP-007248-00	ARM TOP COVER		4
G2004	18033SC-3123	Truss Screw (M5*L6)		4
G2005	03008200I000	Arm Guard Plate(L)		6
G2006	03008300I000	Arm Guard Plate(L) Bracket		12
G2007	02009SC-A001	Side Cover Screw		6
G2008	03303800I000	Arm Guard Plate(R)		6
G2009	03065SC-A001	Guard Plate Screw		6
G2010	03304100I000	Thread Holding Lever Ass'y		6
G2011	03304200I000	Lever Spring		6
G2012	03304300I000	Lever Spring Bush.		6
G2013	03304400I000	Thread Holding Push Plate		6
G2014	07035SC-7113	Hex.Scoket Bolt (M3*L6)		6
G2015	10009EL-A002	UPPER THREAD CATCHER SOL.		6
G2016	05007SC-7113	Hex.Scoket Bolt (M3*L5)		12
G2017	06011SW-2111	Washer (@3)		12
G2018	03410200H000	Jump Motor		6
G2019	02002SC-7119	Pluss Screw (M4*L8)		24
G2020	03410100I000	Jump Motor Base		6
G2021	07016SC-7113	Hex.Scoket Bolt (M4*L10)		12
G2022	18014SW-3115	Spring Washer (@4)		12
G2023	06003SW-2111	Washer (@4)		12
G2024	03410300H000	Jump Crank Stopper		12
G2025	03411400H000	Stud for Jump Crank Stopper		6
G2026	GP-008769-01	Jump Driving Crank		6
G2027	02023SC-7113	Hex. Socket Bolt (M4*L8)		6
G2028	03411810I000	Jump Crank Roller Ass'y		6
G2029	03031SN-A001	Pin. Nut (11/64-N=40)		6
G2030	03410800I000	Jump Retrun Spring		6
G2031	08006SC-8118	Plus Screw (M3*L5)		6
G2032	06011SW-2111	Washer (@3)		6
G2033	03410900H000	Jump Driving Clutch		6
G2034	02023SC-7113	Hex. Socket Bolt (M4*L8)		6
G2035	03411000H000	Jump Clutch Pin		6
G2036	03411100I000	Jump Clutch Base		6
G2037	22006SC-7113	Hex.Scoket Bolt (M3*L8)		6
G2038	11019SW-9115	Spring Washer (3@)		6

Ref. No	Part No.	Part Names		Q'ty
G2039	06011SW-2111	Washer (@3)		6
G2040	03304900H000	Jump Clutch Lever Stopper		6
G2041	04010MC-7113	Hex.Scoket Bolt (M4*L10)		6
G2042	06011SW-2111	Washer (@3)		6
G2043	03411200I000	Jump Driving Clutch Lever		6
G2044	03411300H000	Stud for Jump Clutch Lever		6
G2045	07026AD-A002	Take-Up Guide Rail L=250	(9C)	6
	03300604U000	Take-Up Guide Rail L=329	(12C)	6
	01300105U000	Take-Up Guide Rail (L)	(15C)	2
	01300205U000	Take-Up Guide Rail (M)	(15C)	2
	01400105U000	Take-Up Guide Rail (R)	(15C)	2
G2046	05041SC-A001	Guide Rail Serew		24
G2047	03013EL-T121	Encoder Set		1
G2048	07035SC-7113	Bracket Screw (M3*L6)		2
G2049	08011SW-1111	Spring Washer (@3-S)		2
G2050	06011SW-2111	Washer (@3)		2
G2051	05000100H000	Encoder Base		1
G2052	08076SC-7113	Hex. Socket Bolt (M5*L12)		4
G2053	16018SW-1111	Washer (@5)		2
G2054	18048SW-3115	Spring Washer (@5)		2
G2055	01002200UH60	Oil Tank Cover (L)	UH1504D	1
	01002200UH60	Oil Tank Cover (L)	UH1506D	
	01002200UH60	Oil Tank Cover (L)	UH1208D	
	GP-005065-00	Oil Tank Cover (L)	UH1512D	
G2056	18036CW-UK06	Oil Tank Cover Support		1
G2057	05008MC-9123	TRUSS SCREW(M5*L8) SUS		2
G2058	01303800U000	Cover Rubber Cap		1
G2059	AS-000858-00	UPPER THREAD HOLDING SET		6
G2060	25105ET-B001	Encoder Connector		1
G2061	AS-000861-00	Jump Set		6

G3

Arm III

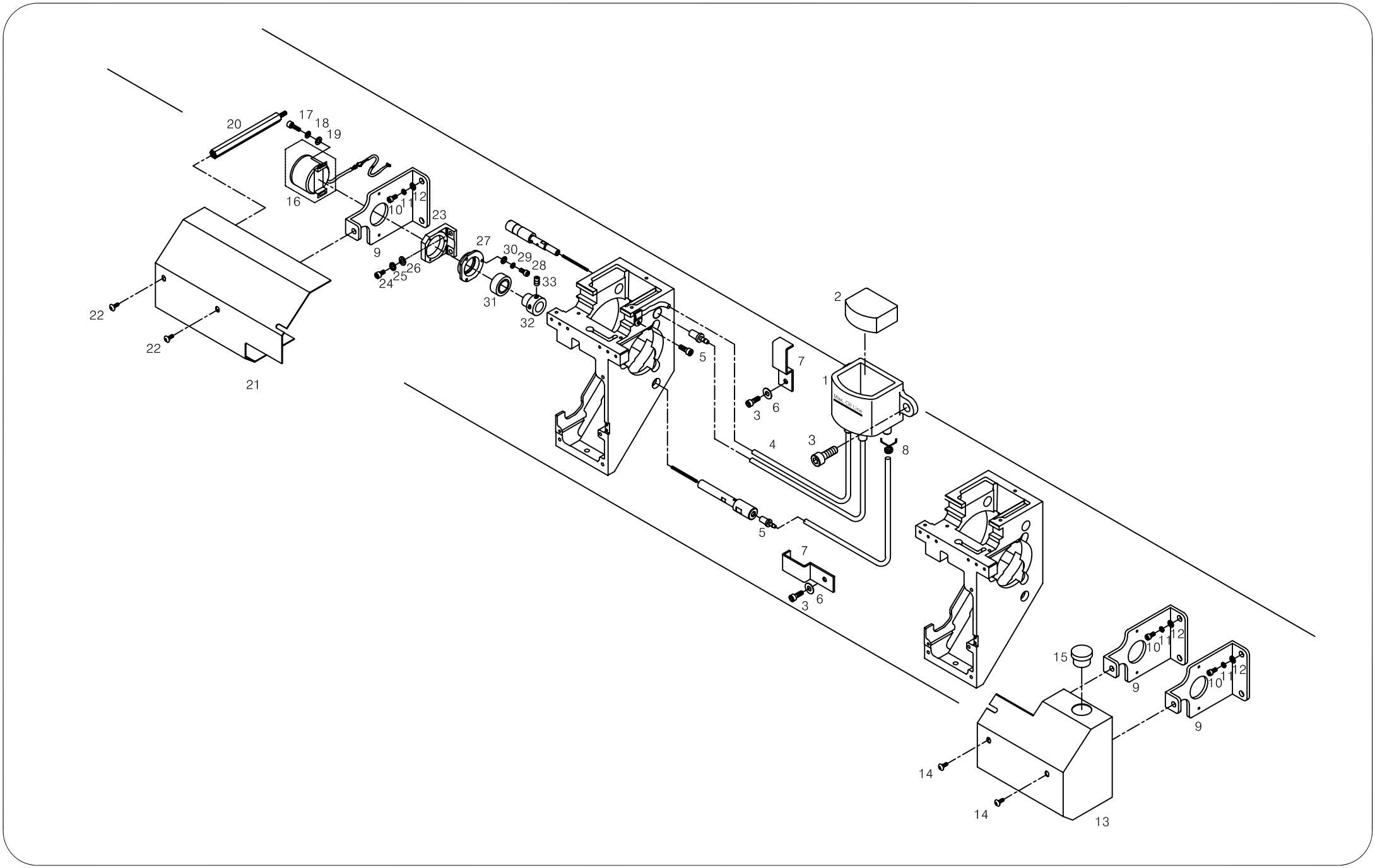
20
17
18
19
16
10
11
12
23
9
27
30
29
28
26
25
24
33
31
32
22
22
21
2
5
7
1
3
6
4
3
8
5
7
3
6
15
10
11
12
9
10
11
12
9
14
14
13

Ref.No	Part No.	PartNames		Q'ty
G3001	GP-009589-00	Oil Tank Ass'Y		6
G3002	GP-009590-00	Oil Tank Felt		6
G3003	02023SC-7113	Hex. Socket Bolt (M4*L8)		24
G3004	18045ET-UK01	Oil Hose L=160		24
G3005	03000500U000	Oil Tube Pin		18
G3006	18015SW-3111	WASHER (4@)		12
G3007	18033PR-UK01	OIL TUBE GUIDE		12
G3008	32046SP-T121	HOLDER FOR OIL HOSE		18
G3009	GP-008536-00	Encoder Base		3
G3010	08076SC-7113	Hex. Socket Bolt (M5*L12)		6
G3011	18048SW-3115	Spring Washer (@5)		6
G3012	16018SW-1111	Washer (@5)		6
G3013	01002100UH60	Oil Tank Cover (R)	UH1504D	1
	01002100UH60	Oil Tank Cover (R)	UH1506D	
	01002100UH60	Oil Tank Cover (R)	UH1208D	
	GP-005064-00	Oil Tank Cover (R)	UH1512D	
G3014	02044SC-3123	Truss Screw (M5*L8)		2
G3015	01303800U000	Cover Rubber Cap		1
G3016	03013EL-T121	Encoder Set		1
G3017	07035SC-7113	Bracket Screw (M3*L6)		2
G3018	08011SW-1111	Spring Washer (@3-S)		2
G3019	06011SW-2111	Washer (@3)		2
G3020	18036CW-UK06	Oil Tank Cover Support		1
G3021	01002300UH60	Encorder Cover		1
G3022	05008MC-9123	TRUSS SCREW(M5*L8) SUS		2
G3023	03008400H000	Top Shaft Bracket "C"		1
G3024	08087SC-7113	Hex. Socket Bolt (M8*L25)		2
G3025	15095SW-3115	Spring Washer (@8)		2
G3026	04029SW-A001	Stud Bolt Washer(S) (@8)		2
G3027	03008500H000	Top Shaft Bearing Case "B"		1
G3028	03016SC-4113	Hex. Socket Bolt (M5*L15)		3
G3029	18048SW-3115	Spring Washer (5@)		3
G3030	18049SW-3111	Washer (@5)		3
G3031	01001100H000	Ball Bearing (6005Zz)		1
G3032	03005210H000	Collar "A"		1
G3033	14060AF-4517	Hex.Socket Screw(M6*L6)		2

Ref. No	Part No.	Part Names	Q'ty

H

Color Change Set

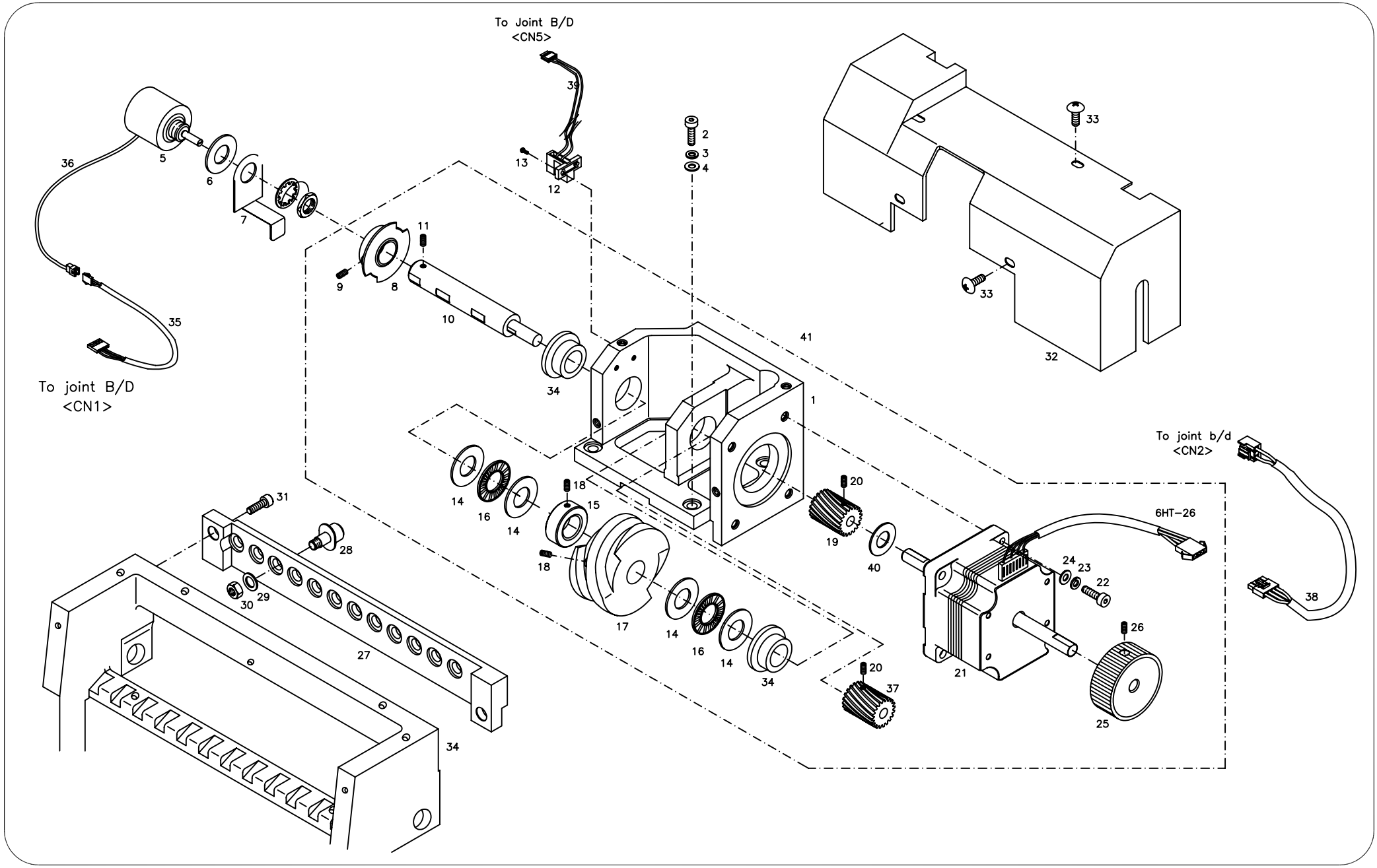

Ref.No	Part No.	Part Names		Q'ty
H-001	13001CA-UK06	Color Change Base		2
H-002	05008SC-4113	Hex.Socket Bolt (M4*L16)		8
H-003	18014SW-3115	Spring Washer (@4-No2)		8
H-004	18015SW-3111	Washer (4@)		8
H-005	15012MT-T121	Potentiometer (7824 R1K L25)		2
H-006	15014PR-T121	Potentiometer Washer		2
H-007	13015PR-UK06	Potentiometer Bracket		2
H-008	13032AD-UK06	Color Change Film Set		2
H-009	04014SC-4517	Hex.Socket Set Screw(M5*L5)		4
H-010	13007CW-UK06	Color Change Shaft		2
H-011	08113SC-A001	Collar Screw		2
H-012	08102300B000	Half Turn Sensor (Gp1S51V)		2
H-013	08006SC-8118	Plus Screw (M3*L5)		4
H-014	13010BR-T121	Washer(@12*@26*1T)		8
H-015	13010CW-UK06	Color Change Collar		2
H-016	13041BR-UK01	Washer(12*@26*1T)		4
H-017	13005CM-UK06	Color Change Cam		2
H-018	04012AF-A001	Hook Shaft Bush Screw		6
H-019	13020GA-UK06	Color Change Gear (L)		2
H-020	08113SC-A001	Collar Screw		8
H-021	13016MT-UK06	Color Change Motor	UH1504D	2
	13016MT-UK06	Color Change Motor	UH1506D	
	13016MT-UK06	Color Change Motor	UH1208D	
	13027MT-UK06	Color Change Motor	UH1512D	
H-022	05008SC-4113	Hex.Socket Bolt (M4*L16)		8
H-023	02028SW-9115	Spring Washer (@4)		8
H-024	05009SW-1111	Washer (@4-L)		8
H-025	13022AD-UK06	Color Change Passivity Handle		2
H-026	03020SC-A001	Drive Pin Screw 11/64-N40-L8		4
H-027	13026CL-D104	Color Change Roller Base	(9C)	2
	13026CL-UK06	Color Change Roller Base	(12C)	
	13026CL-UK16	Color Change Roller Base	(15C)	
H-028	15029AF-T121	Roller Set		30
H-029	18048SW-3115	Spring Washer (@5)		30
H-030	12010SN-1211	Hex.Nut (M5)		30
H-031	18047SC-7113	Hex/ Socket Bolt (M5*L15)		4
H-032	GP-011303-00	Color Change Cover		2
H-033	04006MC-9123	TRUSS SCREW(M4*L6) SUS		8
H-034	GP-006252-00	Cam Bushing		4
H-035	25035EL-UK01	Cc Poten. Meter To J/B(4Ht-35)		2

Ref. No	Part No.	Part Names	Q'ty
H-036	25036EL-UK01	Cc Potentiometer Cable(4Ht-36)	2
H-037	13021GA-UK06	Color Change Gear (R)	2
H-038	25029EL-UK01	C/C Motor Cable (2Ht-28)	2
H-039	25037EL-UK01	Half Turn Cable (2Ht-36)	2
H-040	13019PR-A001	Half Turm Film Washer (T1.0)	2
H-041	08100000UK40	COLOR CHANGE MOTOR SET	2

I1

Wiper Set I

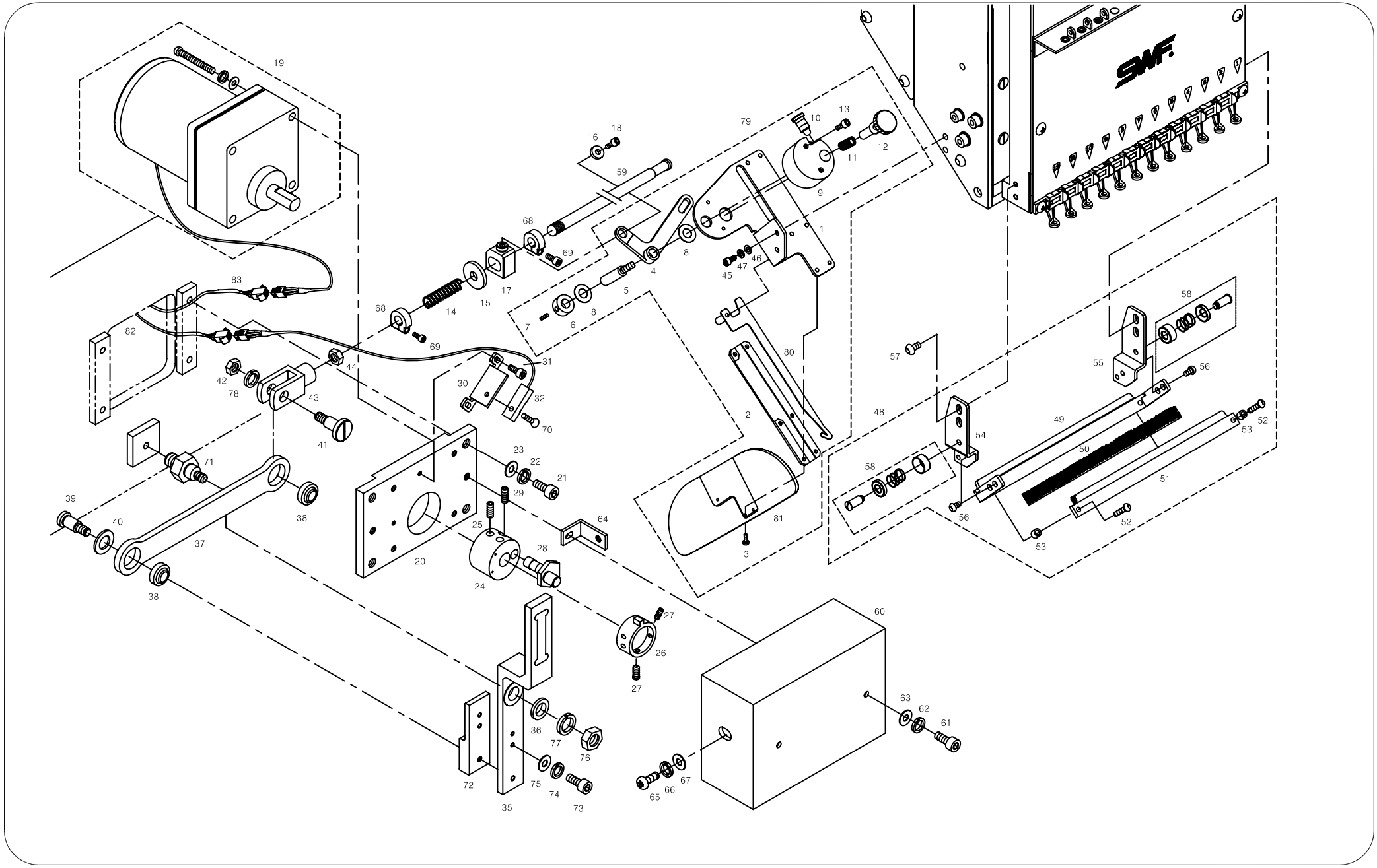

Ref.No	Part No.	Part Names	Q'ty
I1001	03500110H000	Upper Thread Catcher Base	3
I1002	03500210H000	Upper Thread Hook Base Cover	3
I1003	03005MC-3123	Plus Screw (M3*L5)	18
I1004	03500500H000	Upper Catcher Driving Lever	3
I1005	03500600H000	Driving Lever Pin	3
I1006	03500700H000	Driving Lever Pin Collar	3
I1007	04014SC-4517	Hex.Socket Set Screw(M5*L5)	6
I1008	03500800H000	Driving Lever Pin Washer	9
I1009	03500900H000	Clutch Block	3
I1010	03501000H000	Clutch Stud Screw	3
I1011	03501100H000	Clutch Spring	3
I1012	03501200H000	Clutch Dial	3
I1013	11029SC-4113	Hex. Socket Bolt (M4*L20)	6
I1014	03002700H000	Return Spring	3
I1015	03002800H000	Return Spring Stopper Washer	3
I1016	03002900H000	Return Spring Fix Pin Washer	3
I1017	03003000H000	Return Spring Fix Pin	3
I1018	02015SC-7113	Hex.Socket Bolt(M4*L10)	3
I1019	03003100H000	Upper Thread Hook Motor Unit	1
I1020	03003210H000	Motor Base	1
I1021	06025MC-7113	Hex.Socket Bolt(M6*L25)	4
I1022	16014SW-4115	Spring Washer (@6)	4
I1023	08057SW-1111	Washer (@6)	4
I1024	03003300H000	Cam Shaft Fixing Block	4
I1025	05008MC-4517	Hex.Socket Bolt(M5*L8)	2
I1026	GP-005184-01	SENSOR SENSING ADJUSTING RING	1
I1027	04014SC-4517	Hex.Socket Set Screw(M5*L5)	2
I1028	03003500H000	Motor Driving Cam Shaft	1
I1029	04014SC-4517	Hex.Socket Set Screw(M5*L5)	1
I1030	GP-005180-00	UPPER THREAD HOOK SENSOR BASE	1
I1031	07035SC-7113	Bracket Screw (M3*L6)	2
I1032	15-027A-2070	SENSOR	1
I1035	03003910H000	Upper Thread Driving Plate	1
I1036	03004000H000	Stud Bolt Washer	1
I1037	03004200HE00	Motor Driving Connect Plate	1
I1038	03004400H000	Motor Driving Connect Bearing	2
I1039	03008300H000	Connecting Plate Stud Screw A	1
I1040	03004500H000	Connecting Plate Pin Washer	1
I1041	03004700H000	Connecting Plate Stud Screw	1
I1042	13042SN-1111	Hex.Nut (M6*T5-R)	1

Ref. No	Part No.	Part Names	Q'ty
I1043	03004800H000	Connecting Plate Knuckle	1
I1044	04032SN-A001	Hex. Nut (M8-No2)	1
I1045	02023SC-7113	Hex.Socket Bolt (M4*L8)	6
I1046	18015SW-3111	Washer (4@)	6
I1047	18014SW-3115	Spring Washer (@4-No2)	6
I1048	08600005B000	Upper Thread Presser Base Set	3
I1049	09030PR-A002	Upper Thread Presser Base 9C	3
	09026PR-AB00	Upper Thread Presser Base 12C	
	09052PR-T151	Upper Thread Presser Base 15C	
I1050	09031ET-A002	Velcro (9C)	3
	09027ET-AB00	Velcro (12C)	
	09027ET-T151	Velcro (15C)	
I1051	09033PR-A002	Presser Base Cover (9C)	3
	09029PR-AB00	Presser Base Cover (12C)	
	09029PR-T151	Presser Base Cover (15C)	
I1052	07018SC-8118	Plus Screw (M3*L8)	6
I1053	09038CW-A001	Thread Presser Space	6
I1054	09040PR-A001	Bracket (L)	3
I1055	09041PR-A001	Bracket (R)	3
I1056	06010SC-8118	Plus Screw (M3*L4)	6
I1057	02009SC-A001	Side Cover Screw	6
I1058	09044PR-A001	Upper Thread Holder Disk Set	6
I1059	GP-004937-00	Upper Thread Driving Shaft A(L=575) UH1504D	1
	03007010UH60	Upper Thread Driving Shaft A(L=976) UH1506D	
	GP-004156-00	Upper Thread Driving Shaft A (L=1372) UH1208D	
	03007000UH60	Upper Thread Driving Shaft A(L=2175) UH1512D	
I1060	12001900U060	Upper Thread Hook Motor Cover	1
I1061	02023SC-7113	Hex.Socket Bolt (M4*L16)	2
I1062	18014SW-3115	SPRING WASHER (4@)	2
I1063	18015SW-3111	Washer (4@)	2
I1064	03008600H000	Motor Cover Fixing Bracket	2
I1065	02023SC-7113	Hex.Socket Bolt (M4*L8)	2
I1066	18014SW-3115	Spring Washer (@4-No2)	2
I1067	18015SW-3111	Washer (4@)	2
I1068	03002610H000	Return Spring Stopper	6
I1069	05008SC-4113	Hex.Socket Bolt (M4*L16)	6
I1070	13061SC-8119	Plus Screw (M3*L10)	1
I1071	03003810H000	Stud Bolt For Driving Plate	1
I1072	03004110H000	DRIVING PLATE BLOCK B	2
I1073	18047SC-7113	HEX/ SOCKET BOLT (M5*L15)	2

I1

Wiper Set I

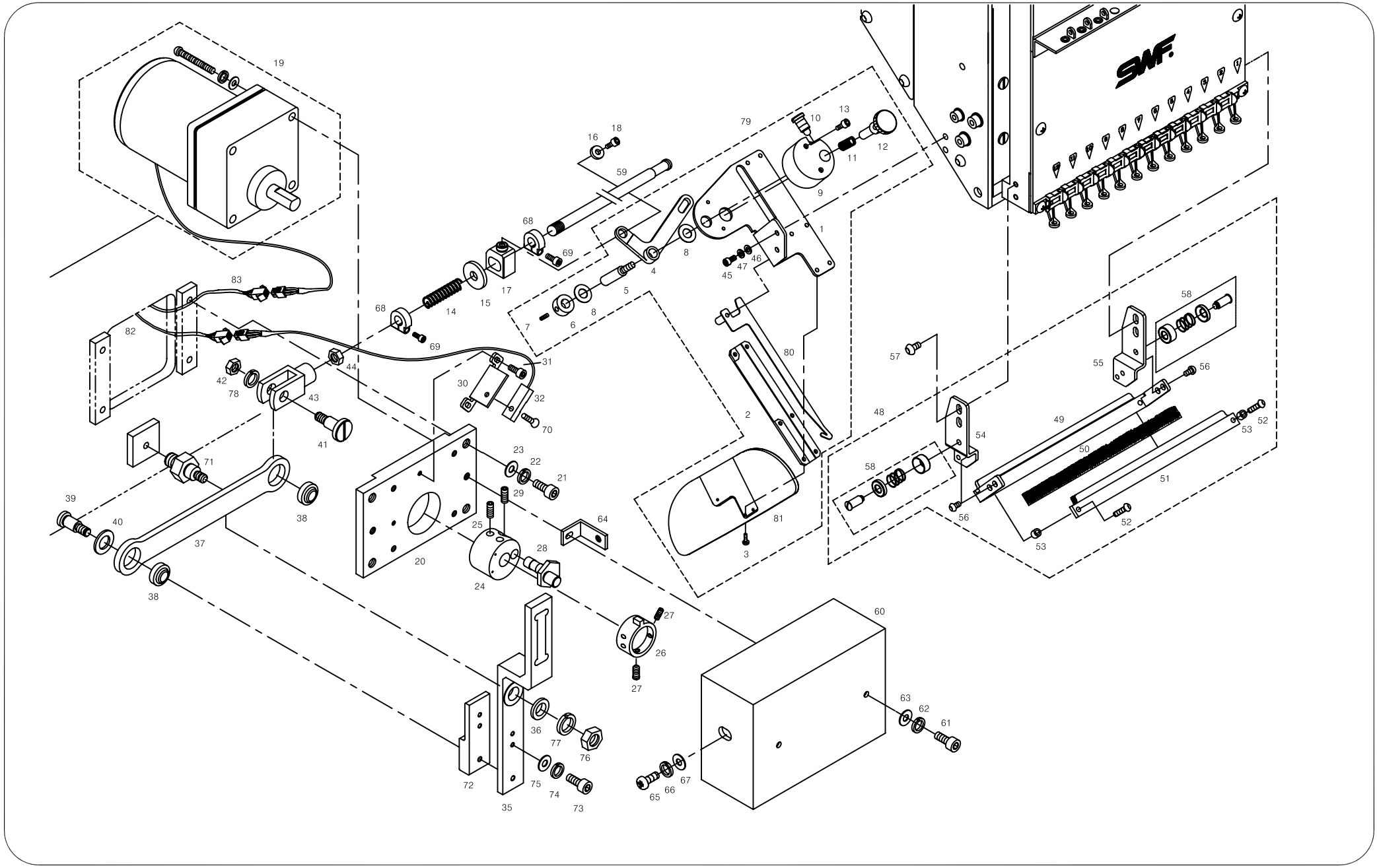

Ref.No	Part No.	Part Names	Q'ty
I1074	18048SW-3115	SPRING WASHER (5@)	2
I1075	18049SW-3111	WASHER (@5)	2
I1076	04032SN-A001	HEX. NUT (M8-NO2)	1
I1077	15095SW-3115	SPRING WASHER (@8)	1
I1078	03026SW-9115	SPRING WASHER (@6)	1
I1079	03500330H000	UPPER THREAD CATCHER SET	3
I1080	03500330H000	Upper Thread Hook	3
I1081	12209100U000	CAP GUIDE	3
I1082	02106600U040	Sh-66-2	1
I1083	02106700U040	Sh-66-2	1

Ref. No	Part No.	Part Names	Q'ty

I2 Wiper Set II

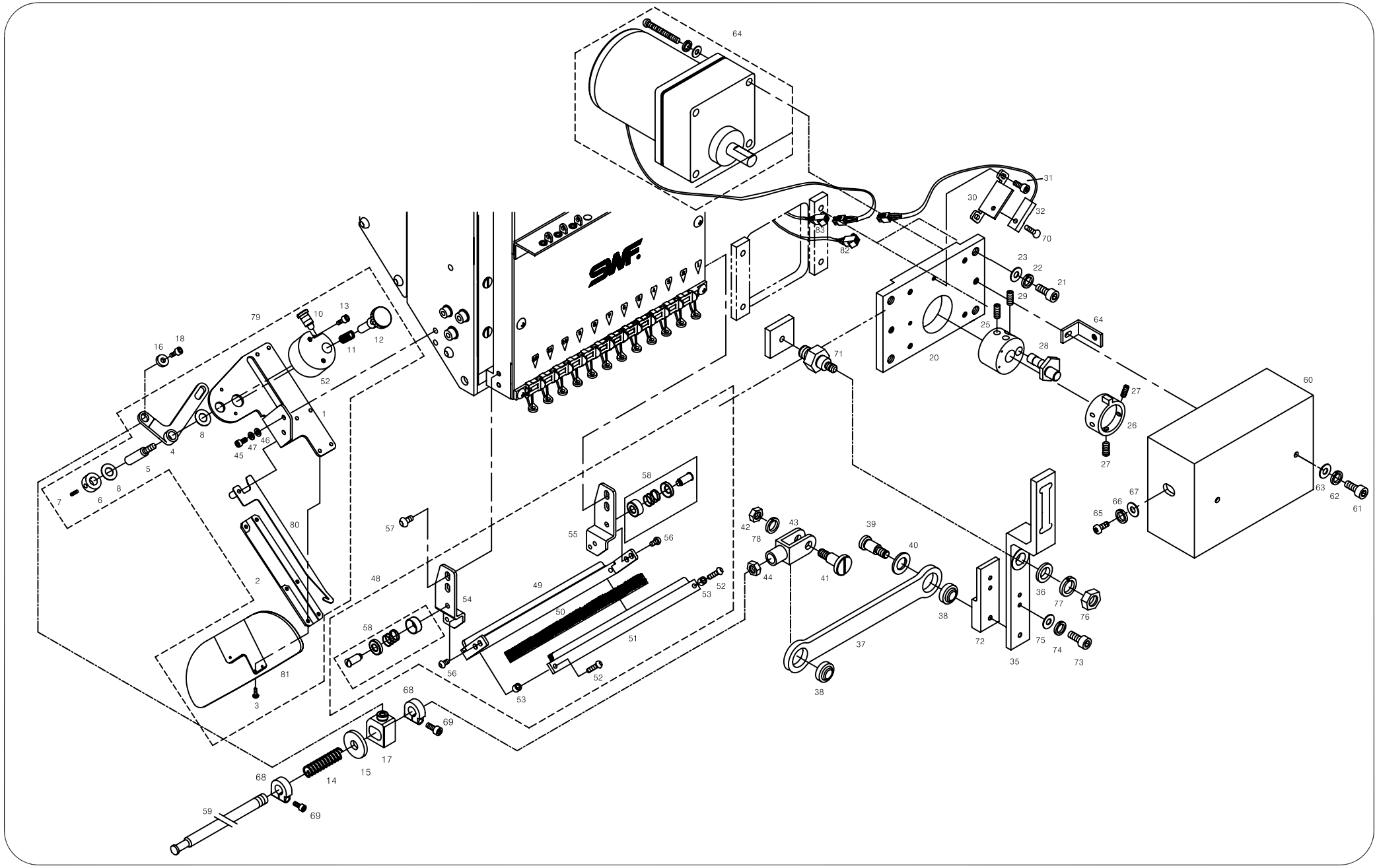

Ref.No	Part No.	Part Names	Q'ty
I2001	03500110H000	Upper Thread Catcher Base	3
I2002	03500210H000	Upper Thread Hook Base Cover	3
I2003	03005MC-3123	Plus Screw (M3*L5)	18
I2004	03500500H000	Upper Catcher Driving Lever	3
I2005	03500600H000	Driving Lever Pin	3
I2006	03500700H000	Driving Lever Pin Collar	3
I2007	04014SC-4517	Hex.Socket Set Screw(M5*L5)	6
I2008	03500800H000	Driving Lever Pin Washer	9
I2009	03500900H000	Clutch Block	3
I2010	03501000H000	Clutch Stud Screw	3
I2011	03501100H000	Clutch Spring	3
I2012	03501200H000	Clutch Dial	3
I2013	11029SC-4113	Hex. Socket Bolt (M4*L20)	6
I2014	03002700H000	Return Spring	3
I2015	03002800H000	Return Spring Stopper Washer	3
I2016	03002900H000	Return Spring Fix Pin Washer	3
I2017	03003000H000	Return Spring Fix Pin	3
I2018	02015SC-7113	Hex.Socket Bolt(M4*L10)	3
I2019	03003100H000	Upper Thread Hook Motor Unit	1
I2020	03003210H000	Motor Base	1
I2021	06025MC-7113	Hex.Socket Bolt(M6*L25)	4
I2022	16014SW-4115	Spring Washer (@6)	4
I2023	08057SW-1111	Washer (@6)	4
I2024	03003300H000	Cam Shaft Fixing Block	4
I2025	05008MC-4517	Hex.Socket Bolt(M5*L8)	2
I2026	GP-005184-01	SENSOR SENSING ADJUSTING RING	2
I2027	04014SC-4517	Hex.Socket Set Screw(M5*L5)	2
I2028	03003500H000	Motor Driving Cam Shaft	1
I2029	04014SC-4517	Hex.Socket Set Screw(M5*L5)	1
I2030	GP-005180-00	UPPER THREAD HOOK SENSOR BASE	1
I2031	07035SC-7113	Bracket Screw (M3*L6)	2
I2032	15-027A-2070	SENSOR	1
I2035	03003910H000	Upper Thread Driving Plate	1
I2036	03004000H000	Stud Bolt Washer	1
I2037	03004200HE00	Motor Driving Connect Plate	1
I2038	03004400H000	Motor Driving Connect Bearing	2
I2039	03008300H000	Connecting Plate Stud Screw A	1
I2040	03004500H000	Connecting Plate Pin Washer	1
I2041	03004700H000	Connecting Plate Stud Screw	1
I2042	13042SN-1111	Hex.Nut (M6*T5-R)	1

Ref. No	Part No.	Part Names	Q'ty
I2043	03004800H000	Connecting Plate Knuckle	1
I2044	04032SN-A001	Hex. Nut (M8-No2)	1
I2045	02023SC-7113	Hex.Socket Bolt (M4*L8)	6
I2046	18015SW-3111	Washer (4@)	6
I2047	18014SW-3115	Spring Washer (@4-No2)	6
I2048	08600005B000	Upper Thread Presser Base Set	3
I2049	09030PR-A002	Upper Thread Presser Base 9C	3
	09026PR-AB00	Upper Thread Presser Base 12C	
	09052PR-T151	Upper Thread Presser Base 15C	
I2050	09031ET-A002	Velcro (9C)	3
	09027ET-AB00	Velcro (12C)	
	09027ET-T151	Velcro (15C)	
I2051	09033PR-A002	Presser Base Cover (9C)	3
	09029PR-AB00	Presser Base Cover (12C)	
	09029PR-T151	Presser Base Cover (15C)	
I2052	07018SC-8118	Plus Screw (M3*L8)	6
I2053	09038CW-A001	Thread Presser Space	6
I2054	09040PR-A001	Bracket (L)	3
I2055	09041PR-A001	Bracket (R)	3
I2056	06010SC-8118	Plus Screw (M3*L4)	6
I2057	02009SC-A001	Side Cover Screw	6
I2058	09044PR-A001	Upper Thread Holder Disk Set	6
I2059	GP-004938-00	Upper Thread Driving Shaft B(L=649) UH1504D	1
	03007110UH60	Upper Thread Driving Shaft B(L=1094) UH1506D	
	GP-004157-00	Upper Thread Driving Shaft B (L=1494) UH1208D	
	GP-005076-00	Upper Thread Driving Shaft B(L=2295) UH1512D	
I2060	12001900U060	Upper Thread Hook Motor Cover	1
I2061	02023SC-7113	Hex.Socket Bolt (M4*L16)	2
I2062	18014SW-3115	SPRING WASHER (4@)	2
I2063	18015SW-3111	Washer (4@)	2
I2064	03008600H000	Motor Cover Fixing Bracket	2
I2065	02023SC-7113	Hex.Socket Bolt (M4*L8)	2
I2066	18014SW-3115	Spring Washer (@4-No2)	2
I2067	18015SW-3111	Washer (4@)	2
I2068	03002610H000	Return Spring Stopper	6
I2069	05008SC-4113	Hex.Socket Bolt (M4*L16)	6
I2070	13061SC-8119	Plus Screw (M3*L10)	1
I2071	03003810H000	Stud Bolt For Driving Plate	1
I2072	03004110H000	DRIVING PLATE BLOCK B	2
I2073	18047SC-7113	HEX/ SOCKET BOLT (M5*L15)	2

I2 Wiper Set II

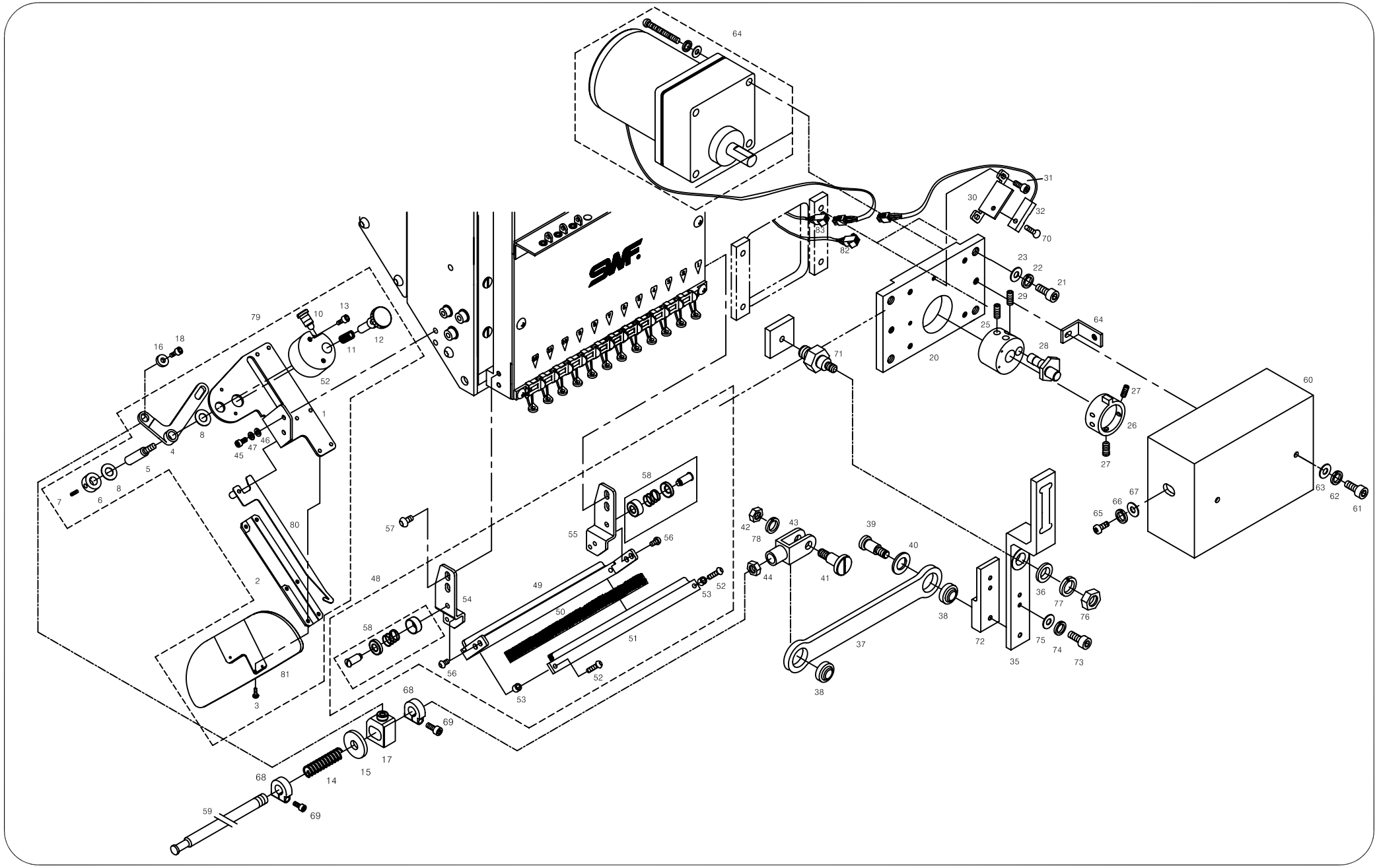

Ref.No	Part No.	Part Names	Q'ty
I2074	18048SW-3115	SPRING WASHER (5@)	2
I2075	18049SW-3111	WASHER (@5)	2
I2076	04032SN-A001	HEX. NUT (M8-NO2)	1
I2077	15095SW-3115	SPRING WASHER (@8)	1
I2078	03026SW-9115	SPRING WASHER (@6)	1
I2079	03500330H000	UPPER THREAD CATCHER SET	3
I2080	03500330H000	Upper Thread Hook	3
I2081	12209100U000	CAP GUIDE	3
I2082	02106600U040	Sh-66-2	1
I2083	02106700U040	Sh-66-2	1

Ref. No	Part No.	Part Names	Q'ty

J

Head

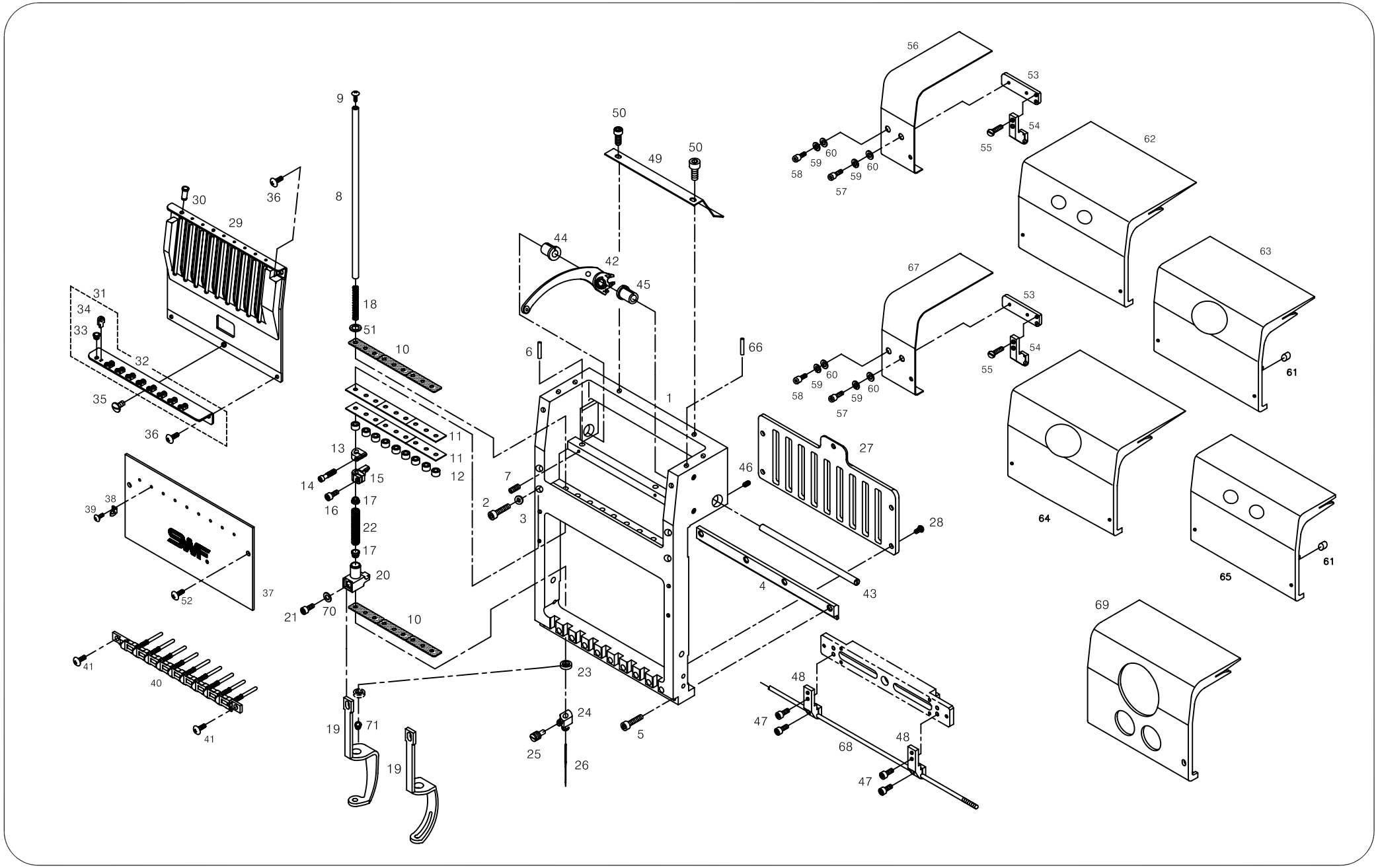
1
2
3
4
5
6
7
8
9
10
11
12
13
14
15
16
17
18
19
20
21
22
23
24
25
26
27
28
29
30
31
32
33
34
35
36
37
38
39
40
41
42
43
44
45
46
47
48
49
50
51
52
53
54
55
56
57
58
59
60
61
62
63
64
65
66
67
68
69
70
71

Ref.No	Part No.	Part Names		Q'ty
J-001	GP-007360-01	Head	(9C)	6
	GP-007361-01	Head	(12C)	
	GP-007362-01	Head	(15C)	
J-002	05008SC-4113	Hex.Socket Bolt (M4*L16)		24
J-003	06003SW-2111	Washer (@4)		24
J-004	08201303I000	Head Rail 9C		6
J-005	04023MC-4113	Hex. Socket Bolt (M4*L23)		24
J-006	05015CW-A001	Head Base Pin(@5*L15)		12
J-007	03022SC-4517	Hex. Socket Set Screw(M4*L5)		12
J-008	05018CW-A001	Needle Bar		54
J-009	05019SC-A001	Needle Bar Cover Screw (M5*L6)		54
J-010	08200700H000	Needle Bar Felt		36
J-011	05023RB-A001	Needle Bar Cushion Rubber "A"		36
J-012	05024RB-A001	Needle Bar Cushion Rubber "B"		54
J-013	11101200T000	Upper Dead Point Stopper		54
J-014	05026SC-4113	Stopper Screw (9/64-11.5)		54
J-015	08201400H000	Needle Bar Holder		54
J-016	05028SC-4113	Holder Screw (9/64-L8)		54
J-017	05021PM-H001	Presser Foot Spring Guide		108
J-018	08201000I000	Needle Bar Return Spring		54
J-019	08200500I000	PRESSER FOOT		54
	GP-006119-00	PRESSER FOOT (L)	(Option)	
J-020	08200900I000	Presser Foot Holder A'ssy		54
J-021	05026SC-H001	Presser Foot Bolt		54
J-022	GP-007216-00	Needle Bar Return Spring		54
J-023	08201200H000	Presser Foot Cushion Rubber A		54
J-024	08201600H000	NEEDLE FIXED HOLDER		54
J-025	05363SC-A001	Needle Fixed Screw (A/S)		54
J-026	05037DB-A001	Needle (Db-K5- #11)		54
J-027	GP-008540-00	Needle Bar Guide Rail	(9C)	6
	GP-008541-00	Needle Bar Guide Rail	(12C)	
	GP-008542-00	Needle Bar Guide Rail	(15C)	
J-028	05041SC-A001	Bolt (9/64 n=40)		30
J-029	10200103B000	Head Face Plate (U) 9C		6
J-030	10200100H000	Thread Guide Bush "A-1"		54
J-031	10300003A000	Thread Guide (M) Set	(9C)	6
	10300004A000	Thread Guide (M) Set	(12C)	
	10300005A000	Thread Guide (M) Set	(15C)	
J-032	GP-033547-00	Thread Guide (M)	(9C)	6
	GP-033548-00	Thread Guide (M)	(12C)	
	GP-033549-00	Thread Guide (M)	(15C)	

Ref. No	Part No.	Part Names		Q'ty
J-033	05452CM-A001	Eyelet "A"		54
J-034	05483CM-A001	Eyelet "B"	(9C)	36
	10110000A000	Eyelet "B"	(12C)	54
	05483CM-A001	Eyelet "B"	(15C)	72
J-035	05062SC-A001	Thread Guide (M) Screw (9/64 n=40)		6
J-036	05070SC-3123	Head Face Plate (U) Screw		24
J-037	12001703I000	Head Face Plate(L)	(9C)	6
	12001704I000	Head Face Plate(L)	(12C)	
J-038	11012PR-B001	Thread Guide		54
J-039	09005SC-3123	Truss Bolt (M3*L5)		54
J-040	10900003I000	Thread Holding Device A'ssy		6
J-041	05070SC-3123	Truss Bolt 9/64 n=40		12
J-042	07005BM-B002	Take-Up Lever Set		54
J-043	08200503A000	Take-Up Lever Shaft (9C)		6
J-044	08203000A000	Take-Up Lever Shaft Bush(L)		6
J-045	08200800A000	Take-Up Lever Shaft Bush(R)		6
J-046	07009SC-4517	Hex. Socket Bolt(M5*L6)		12
J-047	02015SC-7113	Hex.Socket Bolt(M4*L8)		24
J-048	08004900A000	Color Change Bracket "B"		5
J-049	11047PR-A002	Cable Support "B"		6
J-050	02023SC-7113	Hex.Socket Bolt(M4*L5)		12
J-051	05022SW-A001	Spring Shoe Washer		54
J-052	05070SC-3123	Head Face Plate (U) Screw		12
J-053	09000200H000	TOP SHAFT COVER BRACKET (L)		2
J-054	08004700A000	Color Change Bracket "A"		2
J-055	13048SC-A001	Bracket "A" Screw		4
J-056	01001400UK00	Top Shaft Cover (L)		1
J-057	02015SC-7113	Hex.Socket Bolt(M4*L10)		2
J-058	02023SC-7113	Hex.Socket Bolt(M4*L8)		2
J-059	18014SW-3115	Spring Washer (@4-NO2)		4
J-060	18015SW-3111	Washer (4@)		4
J-061	02023ET-A001	Top Shaft Cover Magnet		12
J-062	09000303UH00	Top Shaft Cover "A-1"	(9C)	1
	09000304UH00	Top Shaft Cover "A-1"	(12C)	
	09000305UH00	Top Shaft Cover "A-1"	(15C)	
J-063	09000203UH60	Top Shaft Cover "A-2"	(9C)	1
	09000204UH60	Top Shaft Cover "A-2"	(12C)	
	09000205UH60	Top Shaft Cover "A-2"	(15C)	
J-064	09000203UH00	Top Shaft Cover "A-3"	(9C)	1
	09000204UH00	Top Shaft Cover "A-3"	(12C)	
	09000205UH00	Top Shaft Cover "A-3"	(15C)	

J

Head

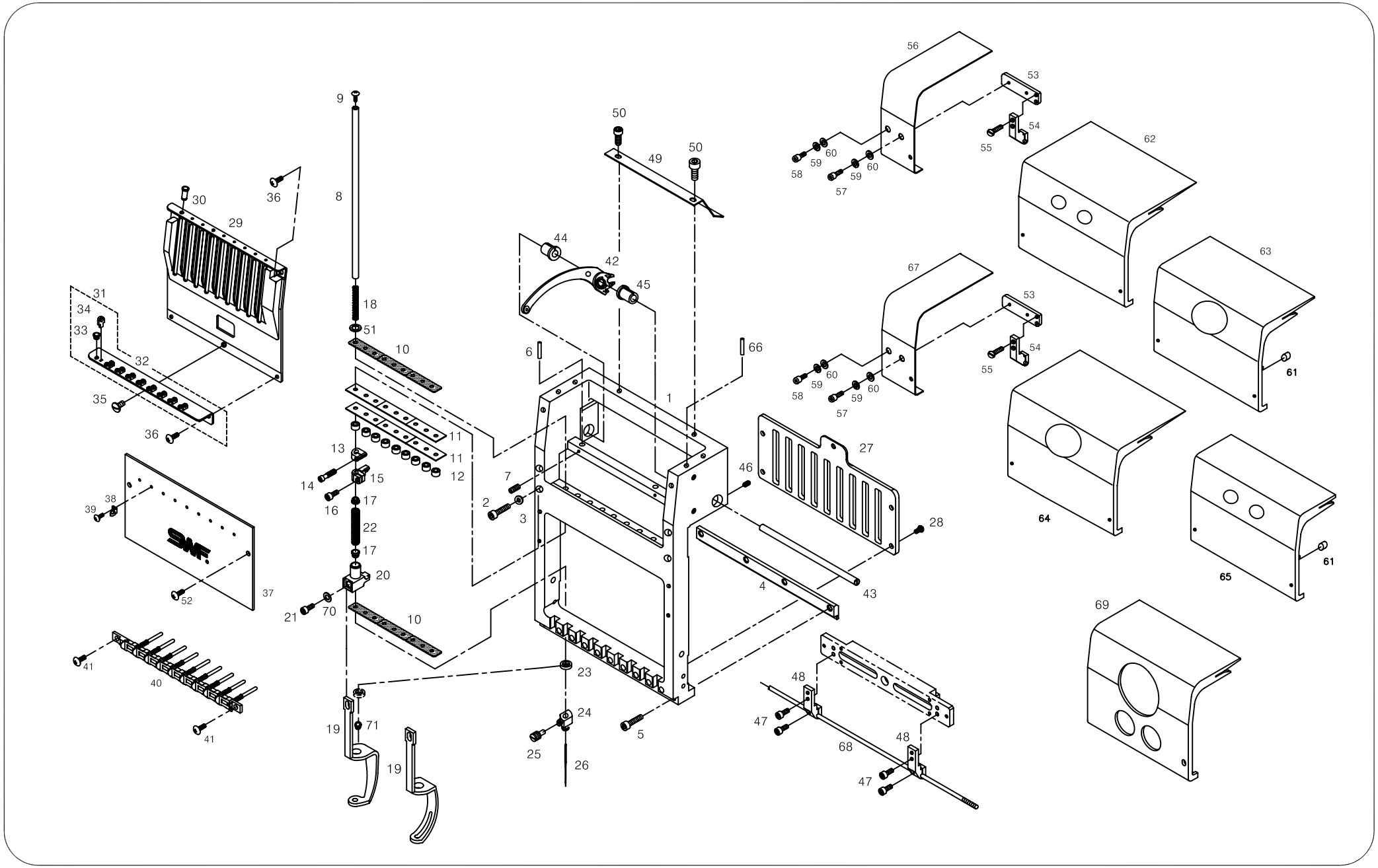
1
2
3
4
5
6
7
8
9
10
11
12
13
14
15
16
17
18
19
20
21
22
23
24
25
26
27
28
29
30
31
32
33
34
35
36
37
38
39
40
41
42
43
44
45
46
47
48
49
50
51
52
53
54
55
56
57
58
59
60
61
62
63
64
65
66
67
68
69
70
71

Ref.No	Part No.	PartNames		Q'ty
J-065	09000103UH00	Top Shaft Cover "A-4"	(9C)	1
	09000104UH00	Top Shaft Cover "A-4"	(12C)	
	09000105UH00	Top Shaft Cover "A-4"	(15C)	
J-066	01303700H000	TENSION PLATE PIN		12
J-067	01002000UH60	UPPER SHAFT COVER (L-2)		1
J-068	GP-004943-00	Head Transportation Shaft	UH1504D	2
	06000114UH60	Head Transportation Shaft	UH1506D	
	GP-005043-00	UPPER THREAD HOOK DRIVING SHAF	UH1208D	
	GP-005089-01	UPPER THREAD DRIVING SHAFT	UH912D	
	06000105UH60	UPPER THREAD DRIVING SHAFT A	UH1512D	
J-069	GP-005026-00	Upper Shaft Cover (A)	UH1504D	2
J-070	05027PR-H001	PRESSER FOOT HOLDER WASHER		54
J-071	05031AF-A001	PRESSER FOOT GUIDE BUSH		90

Ref. No	Part No.	Part Names	Q'ty

K

Thread Tension Unit

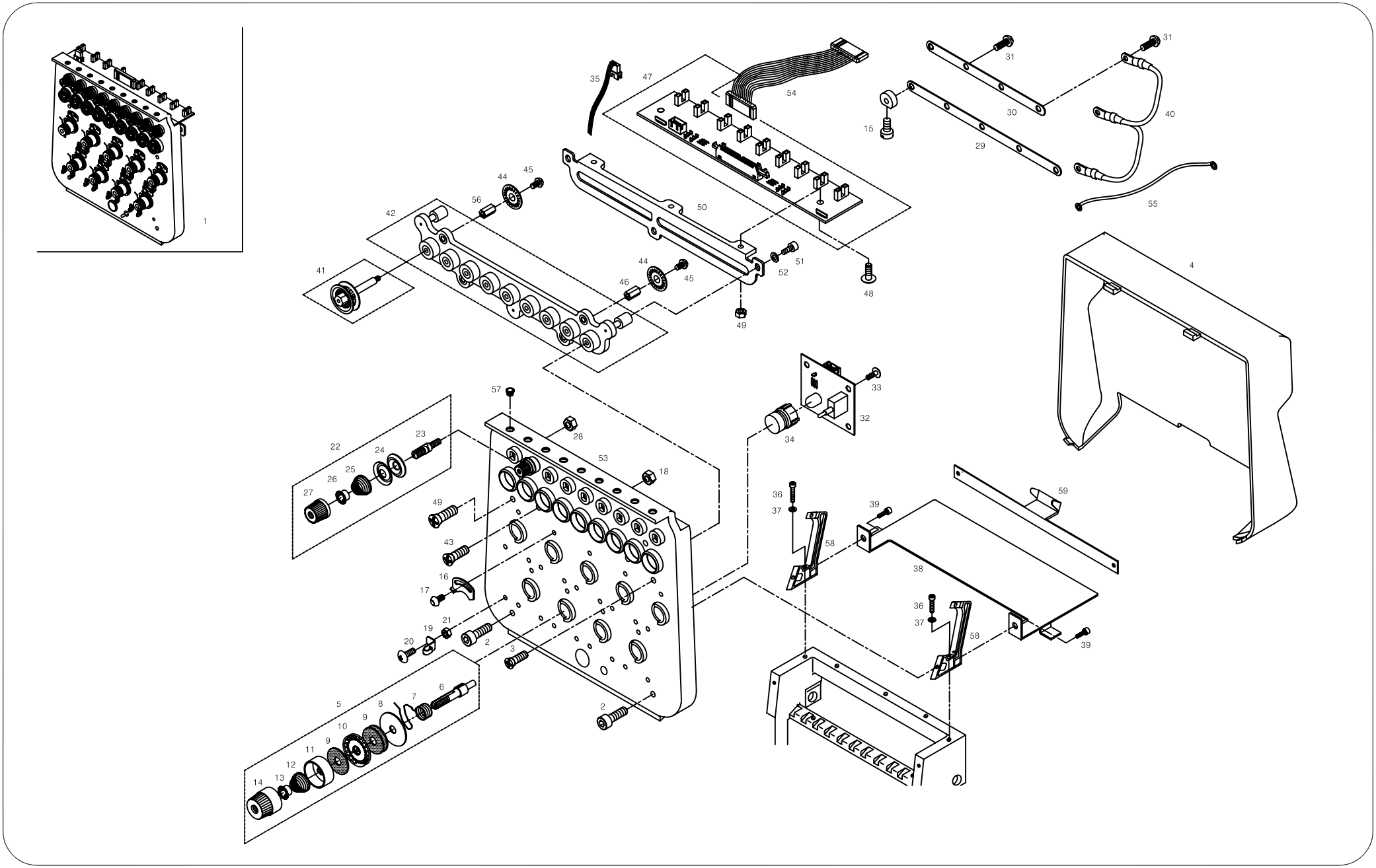

Ref. No	Part No.	Part Names	Q'ty
K-001	08300003I000	Tension Unit Set	6
K-002	04010MC-7113	Hex.Socket Bolt (M4*L10)	12
K-003	15089SC-7119	C.S Screw (M4*L10)	12
K-004	08000803I000	Tension Plate Cover	6
K-005	08310000B000	Tension Adjusting Set	54
K-006	11081CW-A001	Thread Tension Adjusting Stud	54
K-007	11082AF-A001	Thread Take-Up Spring	54
K-008	11083PM-A001	Disc Plate	54
K-009	11084AF-A001	Felt	162
K-010	11085AF-A001	Rotary Tension Disc	54
K-011	11086PM-A001	Tension Spring Collar	54
K-012	08300800A000	Tension Adjusting Spring	54
K-013	08300700A000	Tension Spring Stopper	54
K-014	08300500A000	Tension Adjusting Nut	54
K-015	11009SC-A001	Stud Screw	54
K-016	11009PR-B001	Thread Breakage Detecting Plate	54
K-017	09005SC-3123	Truss Screw (M3*L6)	54
K-018	11014SN-1211	Hex.Nut (M3-No2)	54
K-019	11012PR-B001	Thread Guide (New)	108
K-020	09005SC-3123	Truss Screw (M3*L6)	108
K-021	11014SN-1211	Hex.Nut (M3-No2)	108
K-022	08320000I000	Sub Tension Adjusting Set	54
K-023	08301000I000	Tension Adjusting Stud	54
K-024	08301200I000	Tension Disk @20	108
K-025	08301100I000	Tension Spring	54
K-026	11088PM-A001	Tension Spring Stopper	54
K-027	10600610A000	Sub Tension Adjusting Nut "A"	54
K-028	03031SN-A001	Pin. Nut (11/64-N=40)	54
K-029	08300303I000	Insert Bush. Connecting Plate "A"	6
K-030	08300403I000	Insert Bush. Connecting Plate "B"	6
K-031	09005SC-3123	Truss Screw (M3*L6)	54
K-032	02-0000-EMB1	Head On/Off S/W Board 9C-15C	6
K-033	09005SC-3123	Truss Screw (M3*L6)	24
K-034	08300400A000	Lamp Cover	6
K-035	02101800B000	PLATE LED S/W BOARD CABLE	6
K-036	11021SC-4113	Hex. Socket Bolt (M4*L35)	12
K-037	18015SW-3111	Washer (4@)	12
K-038	08002603H000	Cover Plate A	6
K-039	02023SC-7113	Hex. Socket Bolt (M4*L8)	12
K-040	02103903H000	Wheel Earth 6-9-12C	6

Ref. No	Part No.	Part Names	Q'ty
K-041	11075PM-B001	Thread Sensor Roller(B1)Set	54
K-042	08300703I000	Roller Base Ass'y	6
K-043	02002SC-7119	Pluss Screw (M4*L8)	24
K-044	08300800B000	Thread Breakage Wheel	54
K-045	08011SC-8118	Screw (M2*L4)	54
K-046	11083CW-B001	Thread Detecting Wheel Stud "A"	24
K-047	20009EL-WH09	Wheel Sensor Board 9C	6
K-048	02010SC-3123	Truss Screw (M4*L8)	18
K-049	05016SN-1211	Nut (@4)	18
K-050	08300203I000	Board Base	6
K-051	02023SC-7113	Hex.Socket Bolt (M4*L8)	18
K-052	18015SW-3111	Washer (4@)	18
K-053	08300103I000	Tension Unit	6
K-054	02101000H000	Plate To B/B Cable	6
K-055	25126EL-B001	Sensor Board To Wheel Earth	6
K-056	08308300B000	Thread Detecting Wheel Stud "B"	30
K-057	05452CM-A001	Eyelet "A"	54
K-058	08202000A000	Tension Plate Holder (9C)	12
	08202000I000	Tension Plate Holder (12C)	
	11020PM-B001	Tension Plate Holder (15C)	
K-059	11032PR-T151	CABLE SUPPORTER	2

L1 X Axis Drive System (UH1504D)

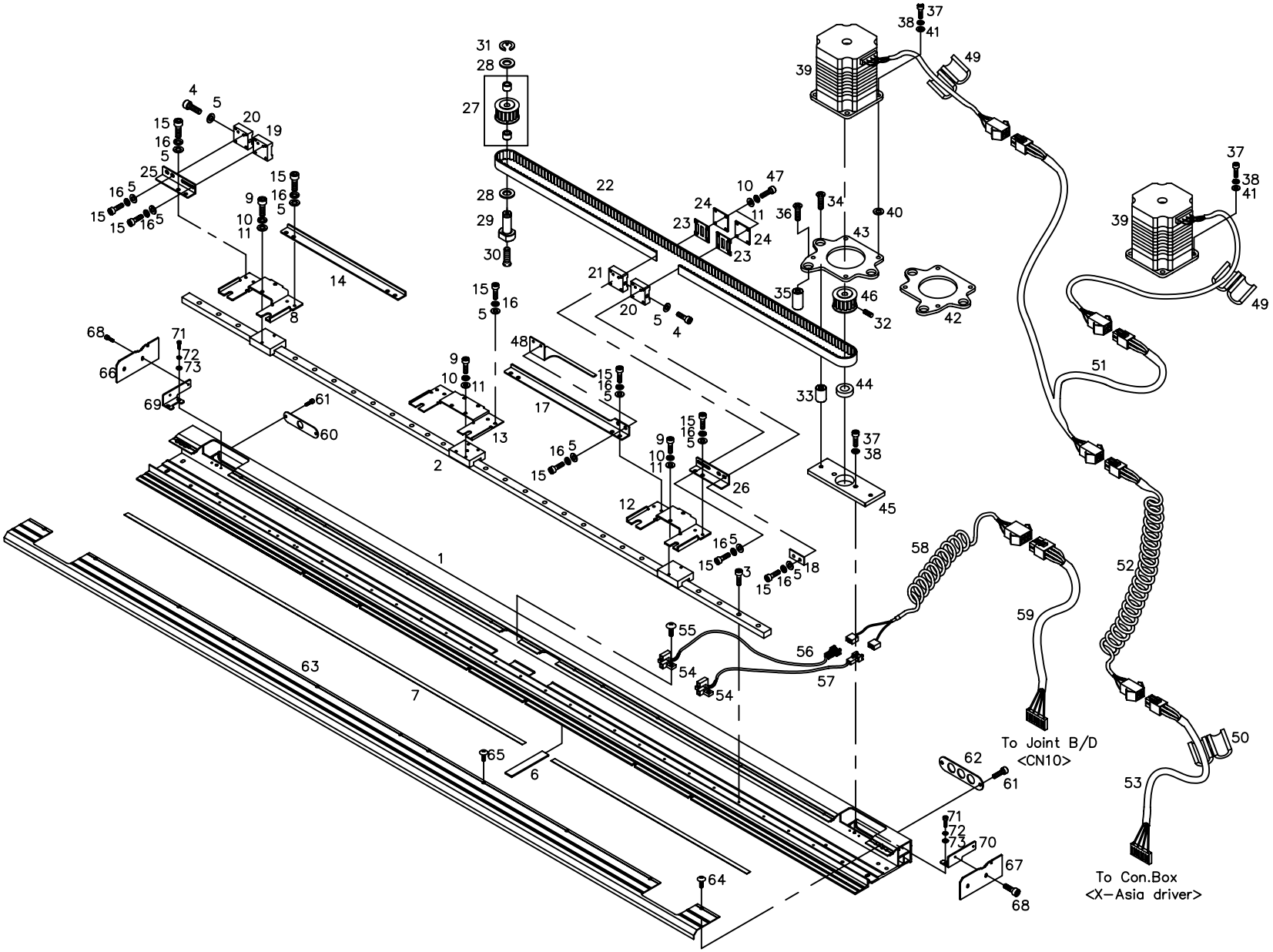

Ref.No	Part No.	PartNames	Q'ty
L1001	GP-004929-03	X-FRAME	2
L1002	GP-004918-00	X-Lm Guide (Sr15W,L1480)	2
L1003	22006SC-7113	Hex. Socket Bolt (M3*L8)	42
L1004	15034SC-4113	Hex. Socket Boit (M4*L45)	4
L1005	18015SW-3111	Washer (@4)	40
L1006	15062SF-T121	Felt	6
L1007	GP-005047-00	Tubular Frame Rail Plate	2
L1008	GP-004917-00	Connecting Plate(L)	2
L1009	22006SC-7113	Hex. Socket Bolt (M3*L8)	16
L1010	11019SW-9115	Spring Washer (3@)	32
L1011	08011SW-1111	Spring Washer (@3-S)	32
L1012	GP-004916-00	Connecting Plate(R)	2
L1013	15015PR-UK02	Connecting Plate	2
L1014	GP-004922-00	Lm Block Connecting Plate(L)	2
L1015	02023SC-7113	Hex. Socket Bolt (M4*L8)	36
L1016	02028SW-9115	Spring Washer (@4)	44
L1017	GP-004921-00	Lm Block Connecting Plate(R)	2
L1018	14020PR-UK01	Space	4
L1019	14048AD-UK01	Belt Bracket (A)	2
L1020	14045AD-UK01	Belt Bracket (B)	4
L1021	14049AD-UK01	Belt Bracket (C)	2
L1022	12048BT-T121	X-Axis Timing Belt	2
L1023	14051PR-UK01	Fixing Plate	8
L1024	14052PR-UK01	Fixing Plate Holder	8
L1025	GP-004919-00	LM Block Driving Plate(L)	4
L1026	GP-004920-00	LM Block Driving Plate(R)	4
L1027	12017PU-T121	Timing Pulley "A"	4
	12018BR-T121	Neddle Bearing Hk1010(Ina)	8
L1028	12019BR-T121	Fiber Washer R-Tw1020	8
L1029	03106000U000	Timing Pulley Driving Pin	4
L1030	15048SC-4119	Plus Screw (M5*L12)	4
L1031	08044SR-4013	E-Ring (@8)	4
L1032	04014SC-4517	Hex.Socket Set Screw(M5*L5)	8
L1033	14065AD-UK01	Motor Fixing Shaft (A)	8
L1034	15053SC-4119	Plus Screw (M5*L30)	8
L1035	14067AD-UK01	Motor Fixing Shaft (B)	4
L1036	15055SC-4119	Plus Screw (M5*L35)	4
L1037	08076SC-7113	Hex. Socket Bolt (M5*L12)	24
L1038	18048SW-3115	Spring Washer (@5)	24
L1039	05100100T000	X-Motor (103H7126-2851)	4

Ref. No	Part No.	Part Names	Q'ty
L1040	15059PR-UK02	X-Motor Space	16
L1041	16018SW-1111	Washer (@5)	16
L1042	15060PR-UK02	X-Motor Base(L)	2
L1043	15061PR-UK02	X-Motor Base(R)	2
L1044	15077BR-A001	Ball Bearing (698Zz)	4
L1045	03000100U020	X-Motor Fixing Block	4
L1046	14063PU-UK01	Timing Pulley "B"	4
L1047	03071SC-7113	HEX. SOCKET BOLT (M3*L10)	32
L1048	GP-004923-00	Perception Plate	2
L1049	15044EL-T121	Bid (S)	4
L1050	15045EL-UK01	Bid (L)	2
L1051	25013EL-UK02	X-Step Motor Driving Power 3	2
L1052	25019EL-T121	Power Cable 2 (1Ht-19)	2
L1053	02101300U040	X-Step Motor Driving Power	2
L1054	08102300B000	Half Turn Sensor (Gp1S51V)	4
L1055	06010SC-8118	Plus Screw(M3*L4)	8
L1056	25046EL-UK02	X-Original In Sensor (White)	2
L1057	25047EL-UK02	X-Original In Sensor (Black)	2
L1058	25040EL-T121	X-Original In Con. (1Ht-40)	2
L1059	25041EL-UK01	X Original In (4Ht-41)	2
L1060	15082PR-W121	FIXING PLATE FOR BUSHING	2
L1061	02023SC-7113	HEX.SOCKET BOLT (M4*L8)	8
L1062	15087PR-UK02	Cable Plate For Bushing	2
L1063	GP-004924-00	X-Frame Cover	2
L1064	15042SC-3123	Truss Screw (M4*L6)	16
L1065	18153SC-3123	Plus Screw (M4*L10)	4
L1066	GP-005106-00	X-FRAME SIDE COVER L	2
L1067	GP-005107-00	X-FRAME SIDE COVER R	2
L1068	15042SC-3123	TRUSS SCREW (M4*L6)	8
L1069	GP-005104-00	X-Frame Side Cover Holder (L)	2
L1070	GP-005105-00	X-Frame Side Cover Holder (R)	2
L1071	02004SC-4113	HEX. SOCKET BOLT (M4*L8)	16
L1072	18014SW-3115	SPRING WASHER (@4-NO2)	16
L1073	18015SW-3111	WASHER (4@)	16

L2

X-Axis Drive Set(UH1506D)

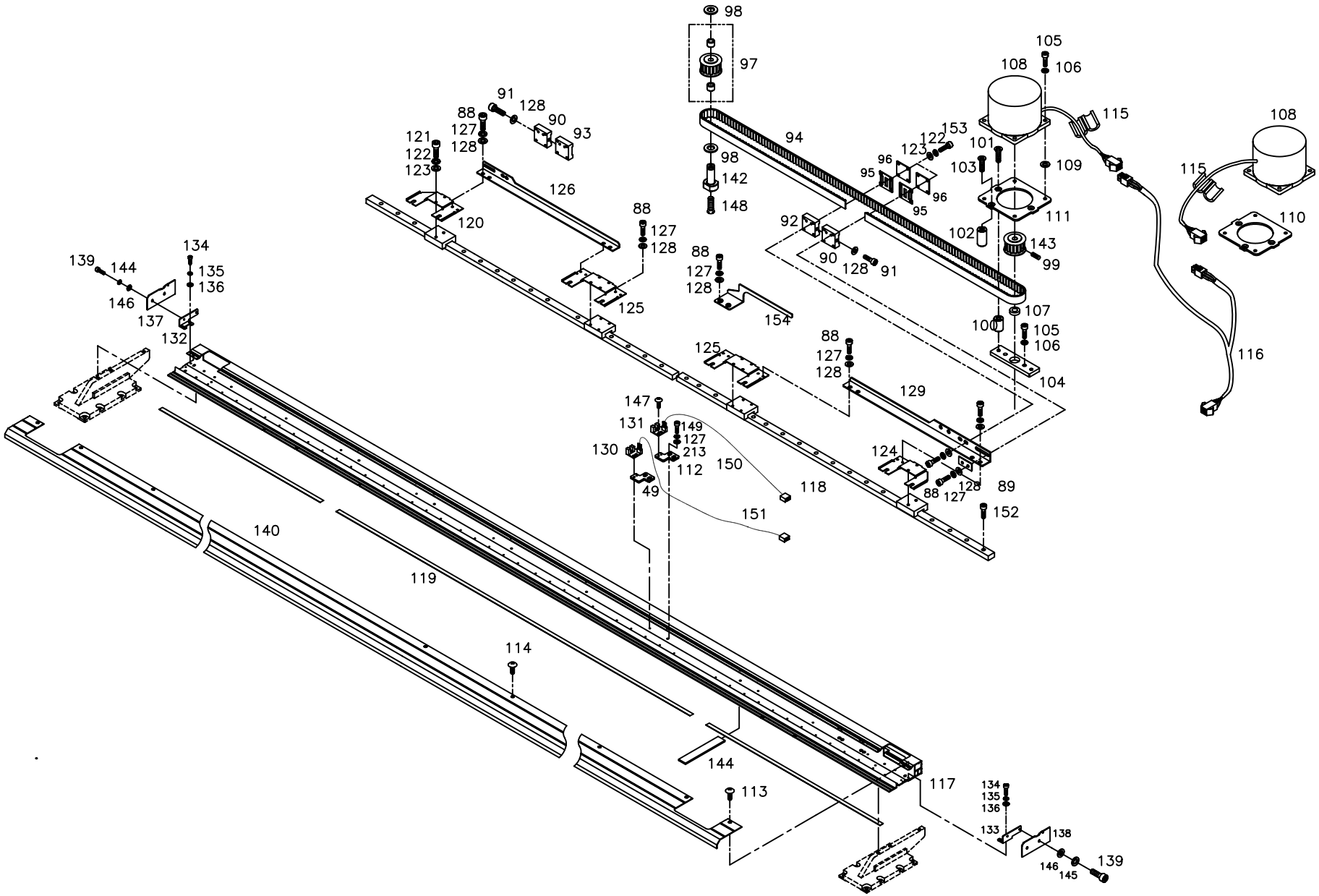

Ref.No	Part No.	Part Names	Q'ty
L2088	02023SC-7113	Hex. Socket Bolt (M4*L8)	32
L2089	14020PR-UK01	Space	2
L2090	14045AD-UK01	Belt Bracket (B)	2
L2091	15034SC-4113	Hex. Socket Boit (M4*L45)	2
L2092	14049AD-UK01	Belt Bracket (C)	1
L2093	14048AD-UK01	Belt Bracket (A)	1
L2094	12048BT-T121	X-Axis Timing Belt	2
L2095	14051PR-UK01	Fixing Plate	4
L2096	14052PR-UK01	Fixing Plate Holder	4
L2097	12017PU-T121	Timing Pulley "A"	2
	12018BR-T121	Neddle Bearing Hk1010(Ina)	4
L2098	12019BR-T121	Fiber Washer R-Tw1020	4
L2099	04014SC-4517	Hex.Socket Set Screw(M5*L5)	4
L2100	14065AD-UK01	Motor Fixing Shaft (A)	4
L2101	15053SC-4119	Plus Screw (M5*L30)	4
L2102	14067AD-UK01	Motor Fixing Shaft (B)	2
L2103	15055SC-4119	Plus Screw (M5*L35)	2
L2104	14069AD-UK01	Motor Block	2
L2105	08076SC-7113	Hex. Socket Bolt (M5*L12)	12
L2106	18048SW-3115	Spring Washer (@5)	12
L2107	14071BR-UK01	Bearing Bc616Zz	2
L2108	15076AF-UK01	X-Motor (103H8221-5044)	2
L2109	15061PR-UK01	Motor Space (@5*@11*2T)	8
L2110	14074PR-UK01	Motor Base (L)	1
L2111	14075PR-UK01	Motor Base (R)	1
L2112	15067PR-UK01	Sensor Plate	2
L2113	15071PR-UK01	Perception Plate	1
L2114	15042SC-3123	Truss Screw (M4*L6)	12
L2115	18153SC-3123	Plus Screw (M4*L10)	2
L2116	15044EL-T121	Bid (S)	2
L2117	GP-007518-01	X-LM GUIDE FRAME L2635	1
L2118	GP-007523-00	X-Axis L/M Guide	2
L2119	GP-008793-00	Tubular Frame Rail Plate	1
L2120	15007PR-UK02	Connecting Plate(L)	1
L2121	02015SC-7113	Hex.Socket Bolt(M4*L10)	12
L2122	18014SW-3115	Spring Washer (@4-No2)	12
L2123	18015SW-3111	Washer (4@)	12
L2124	GP-007520-00	Connecting Plate(R)	1
L2125	15015PR-UK02	Connecting Plate	2
L2126	GP-007519-00	L/M Block Connecting Plate (L)	1

Ref. No	Part No.	Part Names	Q'ty
L2127	18014SW-3115	Spring Washer (@4-No2)	30
L2128	18015SW-3111	Washer (4@)	30
L2129	03200900UK40	L/M Block Connecting Plate (R)	1
L2130	03201700UH00	X-Positioning Sonsor	1
L2131	03201600UH00	X-Positioning Sensor	1
L2132	GP-005104-00	X-FRAME SIDE COVER HOLDER (L)	1
L2133	GP-005105-00	X-FRAME SIDE COVER HOLDER (R)	1
L2134	02023SC-7113	Hex. Socket Bolt (M4*L8)	8
L2135	18014SW-3115	Spring Washer (@4-No2)	8
L2136	05009SW-1111	Washer (@4-L)	8
L2137	GP-005106-00	X-AXIS FRAME SIDE COVER (L)	1
L2138	GP-005107-00	X-AXIS FRAME SIDE COVER (R)	1
L2139	15042SC-3123	Truss Screw (M4*L6)	4
L2140	GP-007525-00	X-Cover	1
L2141	03201900UH00	X-Frame Screw Bush	4
L2142	03106000U000	Timing Pulley Driving Pin	2
L2143	14063PU-UK01	Timing Pulley "B"	2
L2144	03201800UH00	Felt (190*30*1.5T)	4
L2145	18015SW-3111	WASHER (4@)	2
L2146	18014SW-3115	SPRING WASHER (@4-NO2)	2
L2147	03006MC-8118	PLUS SCREW (M3*L6)	4
L2148	03071SC-7113	HEX. SOCKET BOLT (M3*L10)	4
L2149	02015SC-7113	HEX.SOCKET BOLT(M4*L10)	4
L2150	25052EL-UK01	LAST-SENSOR (BLACK) 4HT-52	1
L2151	25053EL-UK01	LAST-SENSOR (WHITE) 4HT-53	1
L2152	22006SC-7113	Hex. Socket Bolt (M3*L8)	62
L2153	03071SC-7113	HEX. SOCKET BOLT (M3*L10)	16
L2154	GP-008796-00	Perception Plate	1

L3

X Axis Drive System (UH1208D)

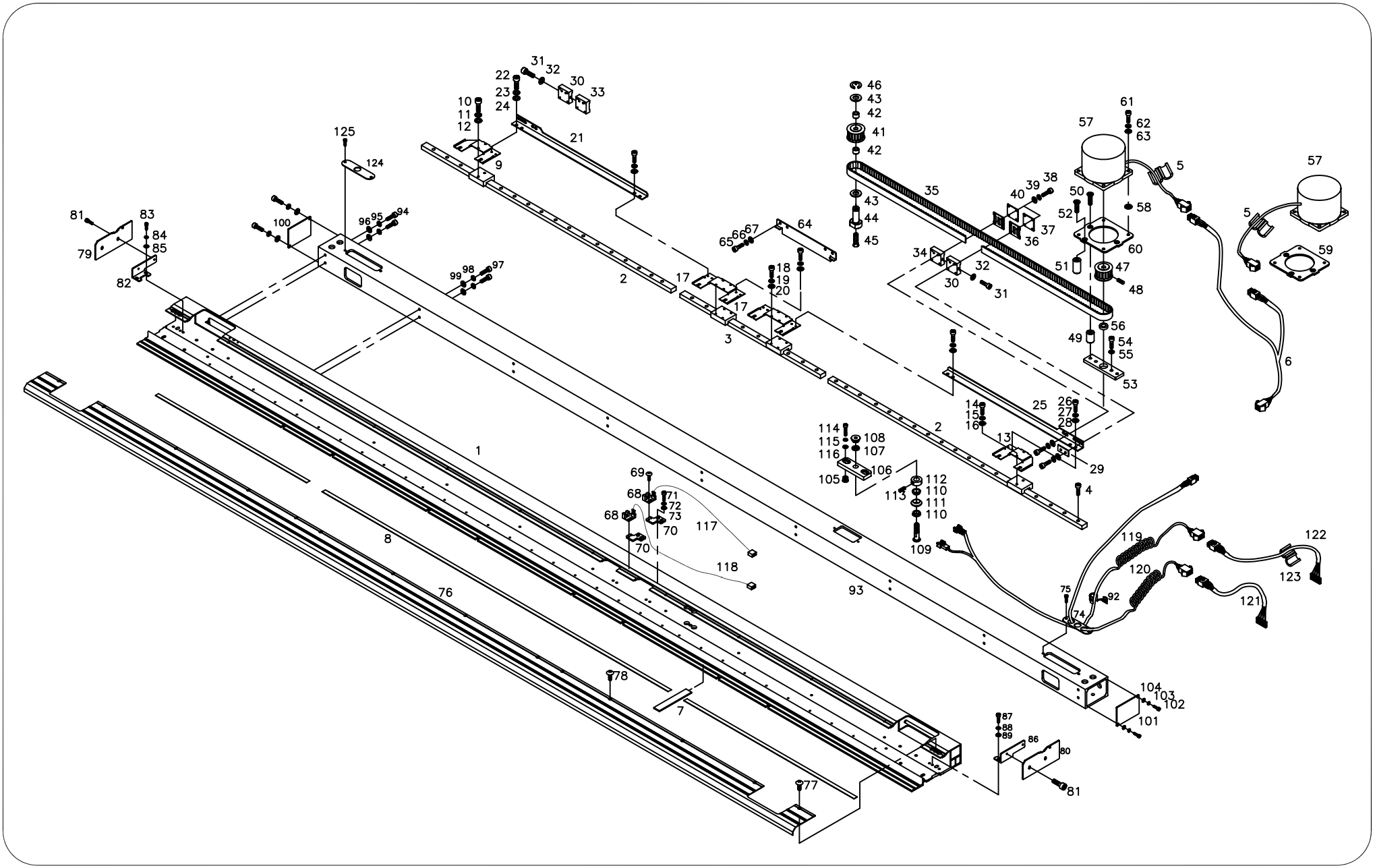

Ref.No	Part No.	PartNames	Q'ty
L3001	GP-004142-02	X-FRAME(L=2135)	2
L3002	GP-004143-00	X-LM RAIL "A" (THK SR15W- L580)	4
L3003	03200600UH00	X-LM RAIL "B" (THK SR15W- L690)	2
L3004	22006SC-7113	Hex. Socket Bolt (M3*L8)	88
L3005	15044EL-T121	Bid (S)	4
L3006	25014EL-UK01	Calble (4Ht-14)	2
L3007	15062SF-T121	Felt	12
L3008	03200700UH00	Tubular Frame Rail Plate	1
L3009	15007PR-UK02	CONNECTING PLATE(L)	2
L3010	02015SC-4113	HEX.SOCKET BOLT(M4*L10)	4
L3011	18014SW-3115	Spring Washer (@4-No2)	4
L3012	18015SW-3111	WASHER (4@)	4
L3013	15011PR-UK02	CONNECTING PLATE(R)	2
L3014	02015SC-4113	HEX.SOCKET BOLT(M4*L10)	4
L3015	18014SW-3115	SPRING WASHER (@4-NO2)	4
L3016	18015SW-3111	WASHER (4@)	4
L3017	15015PR-UK02	Connecting Plate	8
L3018	02015SC-4113	HEX.SOCKET BOLT(M4*L10)	32
L3019	18014SW-3115	Spring Washer (@4-No2)	32
L3020	18015SW-3111	WASHER (4@)	32
L3021	GP-004144-00	LM Block Connecting Plate(L) (L=537)	2
L3022	02004SC-4113	HEX. SOCKET BOLT (M4*L8)	8
L3023	18014SW-3115	SPRING WASHER (@4-NO2)	8
L3024	18015SW-3111	WASHER (4@)	8
L3025	GP-004145-00	LM Block Connecting Plate(R) (L=537)	2
L3026	02004SC-4113	HEX. SOCKET BOLT (M4*L8)	8
L3027	18014SW-3115	SPRING WASHER (@4-NO2)	8
L3028	18015SW-3111	WASHER (4@)	8
L3029	14020PR-UK01	SPACE	4
L3030	14045AD-UK01	BELT BRACKET (B)	4
L3031	15034SC-4113	HEX. SOCKET BOIT (M4*L45)	4
L3032	05009SW-1111	WASHER (@4-L)	4
L3033	14048AD-UK01	BELT BRACKET (A)	2
L3034	14049AD-UK01	BELT BRACKET (C)	2
L3035	03201100UH00	X Timing Belt (015-AT5-0299)	4
L3036	14051PR-UK01	FIXING PLATE	8
L3037	14052PR-UK01	FIXING PLATE HOLDER	8
L3038	13020SC-4113	HEX. SOCKET BOLT (M3*L8)	32
L3039	11019SW-9115	SPRING WASHER (3@)	32
L3040	08011SW-1111	SPRING WASHER (@3-S)	32

Ref. No	Part No.	Part Names	Q'ty
L3041	12017PU-T121	Timing Pulley "A"	4
L3042	12018BR-T121	Neddle Bearing Hk1010(Ina)	8
L3043	12019BR-T121	FIBER WASHER R-TW1020	8
L3044	14060CW-UK01	TIMING PULLEY DRIVING PIN	4
L3045	15048SC-4119	PLUS SCREW (M5*L12)	4
L3046	08044SR-4013	E-RING (@8)	4
L3047	14063PU-UK01	Timing Pulley "B"	4
L3048	04014SC-4517	HEX.SOCKET SET SCREW(M5*L5)	8
L3049	14065AD-UK01	MOTOR FIXING SHAFT (A)	8
L3050	15053SC-4119	PLUS SCREW (M5*L30)	8
L3051	14067AD-UK01	MOTOR FIXING SHAFT (B)	4
L3052	15055SC-4119	PLUS SCREW (M5*L35)	4
L3053	14069AD-UK01	Motor Block	4
L3054	08076SC-4113	HEX. SOCKET BOLT (M5*L12)	8
L3055	16019SW-4115	SPRING WASHER (@5)	8
L3056	14071BR-UK01	Bearing Bc616Zz	4
L3057	15076AF-UK01	X-MOTOR	4
L3058	15061PR-UK01	MOTOR SPACE (@5*@11*2T)	16
L3059	14074PR-UK01	MOTOR BASE (L)	2
L3060	14075PR-UK01	MOTOR BASE (R)	2
L3061	08076SC-4113	HEX. SOCKET BOLT (M5*L12)	16
L3062	16019SW-4115	SPRING WASHER (@5)	16
L3063	16018SW-1111	WASHER (@5)	16
L3064	03201200UH00	X-MOVING SENSOR PLATE	2
L3065	02004SC-4113	HEX. SOCKET BOLT (M4*L8)	4
L3066	18014SW-3115	SPRING WASHER (@4-NO2)	4
L3067	18015SW-3111	WASHER (4@)	4
L3068	03201600UH00	X-POSITIONING SENSOR	4
L3069	06010AF-8118	PLUS SCREW(M3*L4)	8
L3070	15067PR-UK01	SENSOR PLATE	4
L3071	02004SC-4113	HEX. SOCKET BOLT (M4*L8)	8
L3072	18014SW-3115	Spring Washer (@4-No2)	8
L3073	18015SW-3111	Washer (4@)	8
L3074	15087PR-UK02	CABLE PLATE FOR BUSHING	2
L3075	02010SC-3123	TRUSS SCREW (M4*L8)	4
L3076	GP-004146-00	X-FRAME COVER	2
L3077	15042SC-3123	TRUSS SCREW (M4*L6)	32
L3078	18153SC-3123	PLUS SCREW (M4*L10)	4
L3079	GP-005106-00	X-FRAME SIDE COVER L	2
L3080	GP-005107-00	X-FRAME SIDE COVER R	2

L3

X Axis Drive System (UH1208D)

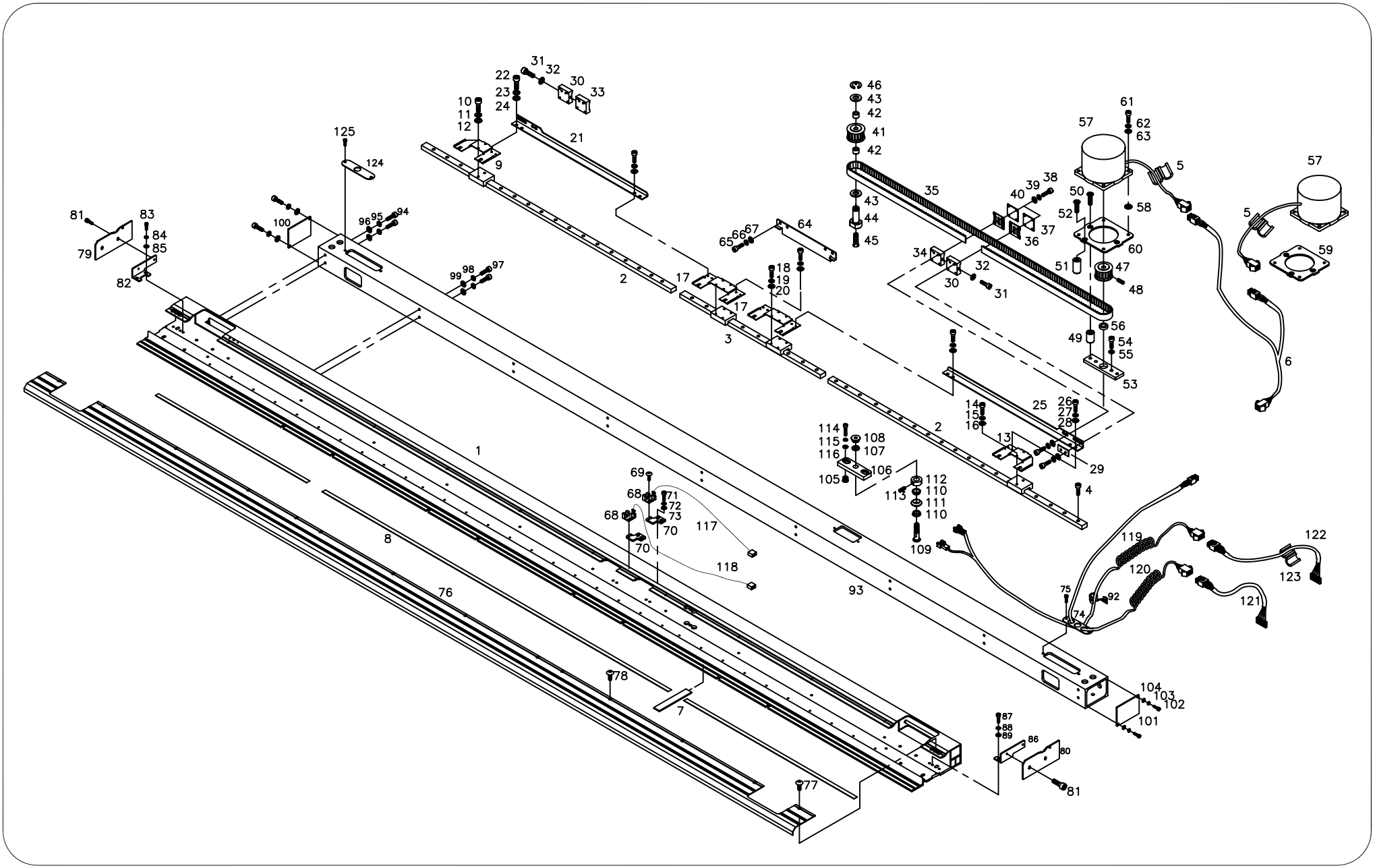

Ref.No	Part No.	PartNames	Q'ty
L3081	15042SC-3123	TRUSS SCREW (M4*L6)	8
L3082	GP-005104-00	X-Frame Side Cover Holder (L)	2
L3083	02004SC-4113	HEX. SOCKET BOLT (M4*L8)	8
L3084	18014SW-3115	SPRING WASHER (@4-NO2)	8
L3085	18015SW-3111	WASHER (4@)	8
L3086	GP-005105-00	X-Frame Side Cover Holder (R)	2
L3087	02004SC-4113	HEX. SOCKET BOLT (M4*L8)	8
L3088	18014SW-3115	SPRING WASHER (@4-NO2)	8
L3089	18015SW-3111	WASHER (4@)	8
L3092	23019EL-A001	CODE Push (6NR-16)	8
L3093	GP-004272-01	X-FRAME SUPPORT BAR	2
L3094	18047SC-7113	HEX. SOCKET BOLT (M5*L15)	4
L3095	18048SW-3115	SPRING WASHER (5@)	4
L3096	18049SW-3111	WASHER (@5)	4
L3097	07016SC-4113	HEX. SOCKET BOLT (M4*L12)	36
L3098	18014SW-3115	SPRING WASHER (@4-NO2)	36
L3099	18015SW-3111	WASHER (4@)	36
L3100	GP-005108-00	X-Frame Support Bar Cover L	2
L3101	GP-005109-00	X-Frame Support Bar Cover R	2
L3102	15112SC-7113	HEX. SOCKET SET SCREW(M3*L8)	8
L3103	11019SW-9115	SPRING WASHER (3@)	8
L3104	06011SW-2111	WASHER (@3)	8
L3105	03201900UH00	X-FRAME SCREW BUSH	8
L3106	03101700UH00	Roller Fixed Plate	4
L3107	15095SW-3115	Spring Washer (@8)	4
L3108	04032SN-A001	Hex. Nut (M8-No2)	4
L3109	15104CW-UK01	Roller Stud Bolt	4
L3110	15106BR-A001	Flange Bearing (1280Zz)	8
L3111	15130AF-A001	Roller Guide	4
L3112	15107CW-UK01	Roller Collar	4
L3113	03022SC-4517	Hex. Socket Set Screw(M4*L5)	8
L3114	07016SC-7113	HEX.SOCKET BOLT (M4*L12)	8
L3115	18014SW-3115	Spring Washer (@4-No2)	8
L3116	18015SW-3111	Washer (4@)	8
L3117	25052EL-UK01	LAST-SENSOR (BLACK) 4HT-52	2
L3118	25053EL-UK01	LAST-SENSOR (WHITE) 4HT-53	2
L3119	25019EL-T121	Power Cable 2 (1Ht-19)	2
L3120	25038EL-UK06	Cable (25-38)	2
L3121	25041EL-UK01	X Original In (4Ht-41)	2
L3122	02101300U040	Cable (Sh-13-1)	2

Ref. No	Part No.	Part Names	Q'ty
L3123	15045EL-UK01	Bid (L)	2
L3124	15082PR-W121	FIXING PLATE FOR BUSHING	2
L3125	02023SC-7113	HEX.SOCKET BOLT (M4*L8)	8

L4 X-Axis Drive System (UH1512D)

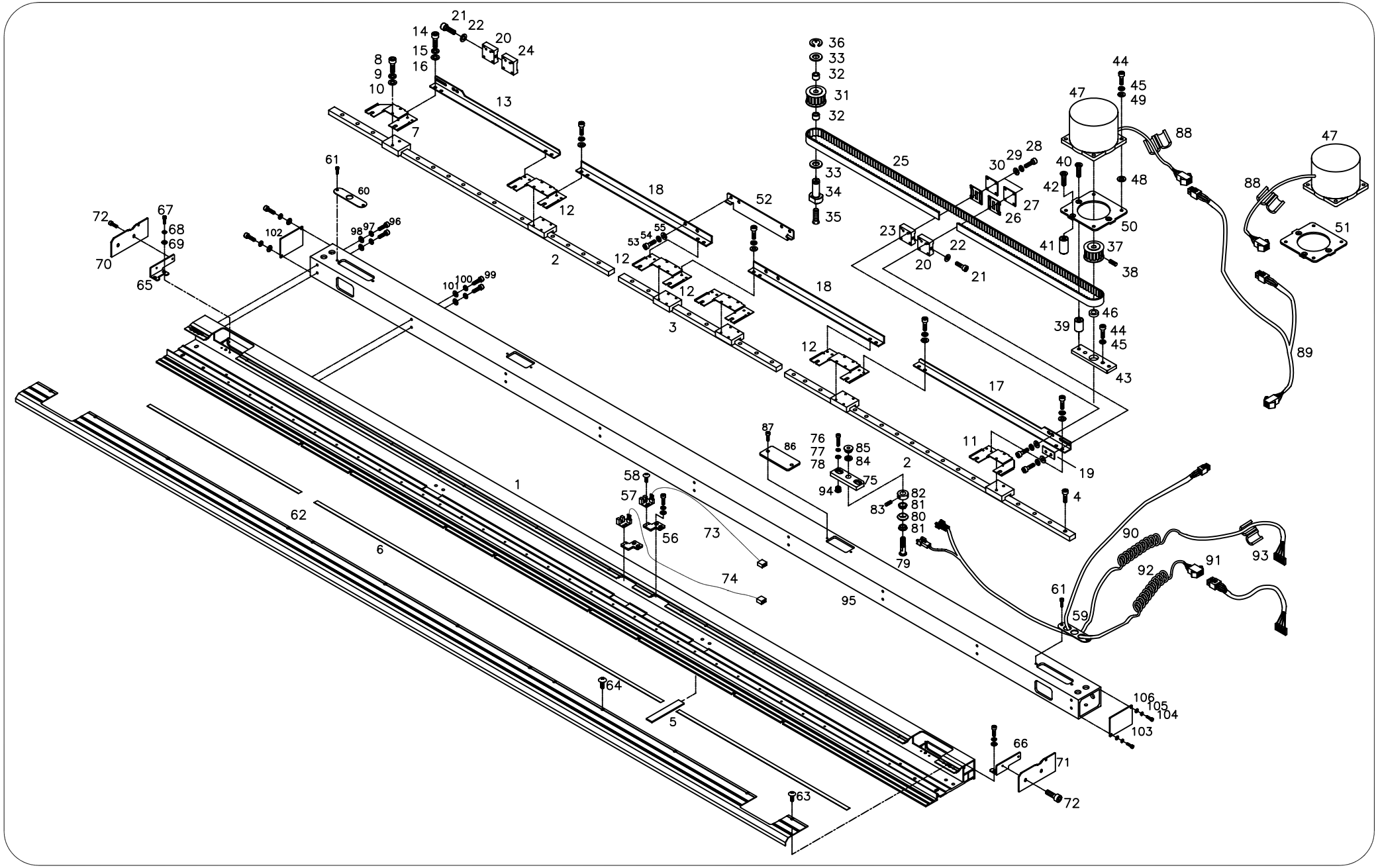

Ref.No	Part No.	PartNames	Q'ty
L4001	GP-005070-01	X-Lm Guide Frame	2
L4002	03200500UH00	X-Axis L/M Guide "A"	4
L4003	03200600UH00	X-Axis L/M "B"	1
L4004	22006SC-7113	Hex. Socket Bolt (M3*L8)	92
L4005	15062SF-T121	Felt	16
L4006	03200700UH00	Tubular Frame Rail Plate	2
L4007	15007PR-UK02	Connecting Plate(L)	2
L4008	02015SC-7113	Hex.Socket Bolt(M4*L10)	16
L4009	02028SW-9115	Spring Washer (@4)	16
L4010	02063SW-1111	Washer(@4)	16
L4011	15011PR-UK02	Connecting Plate(R)	2
L4012	15015PR-UK02	Connecting Plate	4
L4013	03200800UH00	L/M Block Connecting Plate (L)	1
L4014	02023SC-7113	Hex. Socket Bolt (M4*L8)	32
L4015	02028SW-9115	Spring Washer (@4)	32
L4016	05009SW-1111	Washer (@4-L)	32
L4017	03200900UH00	L/M Block Connecting Plate (R)	2
L4018	03201000UH00	L/M Block Connecting Plate	4
L4019	14020PR-UK01	Space	4
L4020	14045AD-UK01	Belt Bracket (B)	4
L4021	15034SC-4113	Hex. Socket Boit (M4*L45)	4
L4022	05009SW-1111	Washer (@4-L)	4
L4023	14049AD-UK01	Belt Bracket (C)	2
L4024	14048AD-UK01	Belt Bracket (A)	2
L4025	03201100UH00	X-Timming Belt (L=1260)	4
L4026	14051PR-UK01	Fixing Plate	8
L4027	14052PR-UK01	Fixing Plate Holder	8
L4028	03071SC-A001	Hex.Scoket Bolt (M3*L15)	32
L4029	11019SW-9115	Spring Washer (3@)	32
L4030	08011SW-1111	Spring Washer (@3-S)	32
L4031	12017PU-T121	Timing Pulley "A"	4
L4032	12018BR-T121	Neddle Bearing Hk1010(Ina)	8
L4033	12019BR-T121	Fiber Washer R-Tw1020	8
L4034	03106000U000	Timing Pulley Driving Pin	4
L4035	15048SC-4119	Plus Screw (M5*L12)	4
L4036	08044SR-4013	E-Ring (@8)	4
L4037	14063PU-UK01	Timing Pulley "B"	4
L4038	04014SC-4517	Hex.Socket Set Screw(M5*L5)	8
L4039	14065AD-UK01	Motor Fixing Shaft (A)	8
L4040	15053SC-4119	Plus Screw (M5*L30)	8

Ref. No	Part No.	Part Names	Q'ty
L4041	14067AD-UK01	Motor Fixing Shaft (B)	4
L4042	15055SC-4119	Plus Screw (M5*L35)	4
L4043	14069AD-UK01	Motor Block	4
L4044	08076SC-7113	Hex. Socket Bolt (M5*L12)	40
L4045	18048SW-3115	Spring Washer (@5)	40
L4046	14071BR-UK01	Bearing Bc616Zz	4
L4047	15076AF-UK01	X-Motor	4
L4048	15061PR-UK01	Motor Space (@5*@11*2T)	16
L4049	16018SW-1111	Washer (@5)	16
L4050	14074PR-UK01	Motor Base (L)	2
L4051	14075PR-UK01	Motor Base (R)	2
L4052	03201200UH00	X-Moving Sensor Plate	2
L4053	02023SC-7113	Hex. Socket Bolt (M4*L8)	12
L4054	02028SW-9115	Spring Washer (@4)	12
L4055	05009SW-1111	Washer (@4-L)	12
L4056	15067PR-UK01	Sensor Plate	4
L4057	15043EL-UK01	X-Positioning Sensor	4
L4058	06010AF-8118	Plus Screw(M3*L4)	8
L4059	15087PR-UK02	Cable Plate For Bushing	2
L4060	15082PR-W121	FIXING PLATE FOR BUSHING	2
L4061	02023SC-7113	HEX.SOCKET BOLT (M4*L8)	8
L4062	03201300UH00	X-Cover (L=2931)	24
L4063	15042SC-3123	Truss Screw (M4*L6)	4
L4064	18153SC-3123	Plus Screw (M4*L10)	2
L4065	GP-005104-00	X-Frame Side Cover Holder (L)	2
L4066	GP-005105-00	X-Frame Side Cover Holder (R)	16
L4067	02023SC-7113	Hex. Socket Bolt (M4*L8)	16
L4068	02028SW-9115	Spring Washer (@4)	16
L4069	05009SW-1111	Washer (@4-L)	16
L4070	GP-005106-00	X-Axis Frame Side Cover (L)	2
L4071	GP-005107-00	X-Axis Frame Side Cover (R)	2
L4072	15042SC-3123	Truss Screw (M4*L6)	8
L4073	25052EL-UK01	Last-Sensor (Black) 4Ht-52	2
L4074	25053EL-UK01	Last-Sensor (White) 4Ht-53	2
L4075	03101700UH00	Roller Fixed Plate	4
L4076	02023SC-7113	Hex.Socket Bolt (M4*L8)	8
L4077	18014SW-3115	Spring Washer (@4-No2)	8
L4078	18015SW-3111	Washer (4@)	8
L4079	15104CW-UK01	Roller Stud Bolt	4
L4080	15130AF-A001	Roller Guide	4

L4 X-Axis Drive System (UH1512D)

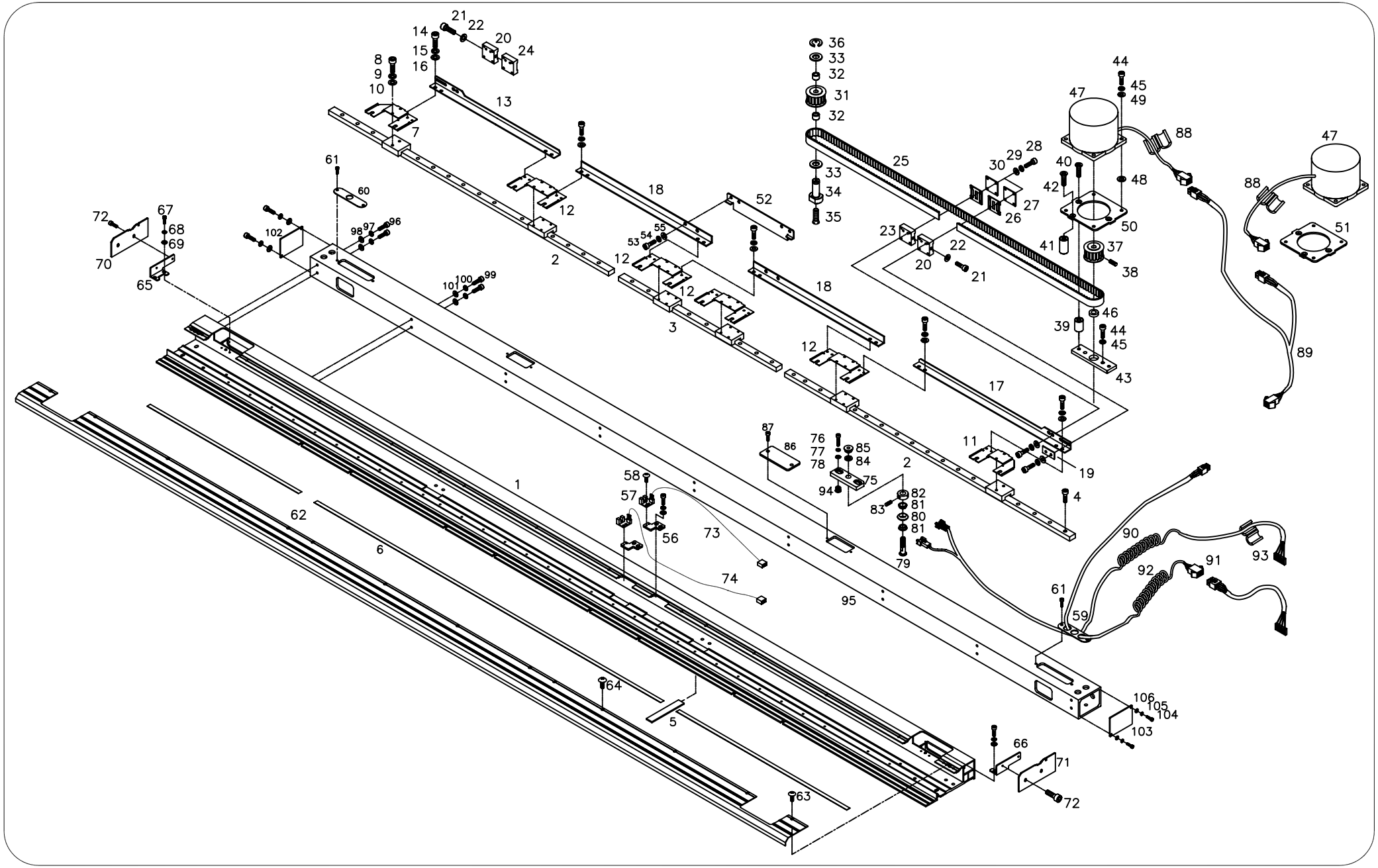

Ref.No	Part No.	PartNames	Q'ty
L4081	15106BR-A001	Flange Bearing (1280Zz)	8
L4082	15107CW-UK01	Roller Collar	4
L4083	03022SC-4517	Hex. Socket Set Screw(M4*L5)	8
L4084	18048SW-3115	Spring Washer (5@)	4
L4085	04032SN-A001	Hex. Nut (M8-No2)	4
L4086	03000100UH00	Roller Plate Cover	8
L4087	22006SC-7113	Hex. Socket Bolt (M3*L8)	16
L4088	15044EL-T121	Bid (S)	4
L4089	02101000UH60	Cable (25-10)	2
L4090	25009EL-UK06	Cable (25-09)	2
L4091	25038EL-UK06	Cable (25-38)	2
L4092	25041EL-UK01	X Original In (4Ht-41)	2
L4093	15045EL-UK01	Bid (L)	2
L4094	03201900UH00	X-Frame Screw Bush	8
L4095	GP-005071-01	X-FRAME SUPPORT BAR	2
L4096	18047SC-7113	HEX. SOCKET BOLT (M5*L15)	4
L4097	18048SW-3115	SPRING WASHER (5@)	4
L4098	18049SW-3111	WASHER (@5)	4
L4099	02004SC-4113	HEX. SOCKET BOLT (M4*L10)	36
L4100	18014SW-3115	SPRING WASHER (@4-NO2)	36
L4101	18015SW-3111	WASHER (4@)	36
L4102	03000200UH80	X-Frame Support Bar Cover L	2
L4103	03000200UH80	X-Frame Support Bar Cover R	2
L4104	15112SC-7113	HEX. SOCKET SET SCREW(M3*L8)	8
L4105	11019SW-9115	SPRING WASHER (3@)	8
L4106	06011SW-2111	WASHER (@3)	8

Ref. No	Part No.	Part Names	Q'ty

M1

Y-Axis Drive System (UH1504D)

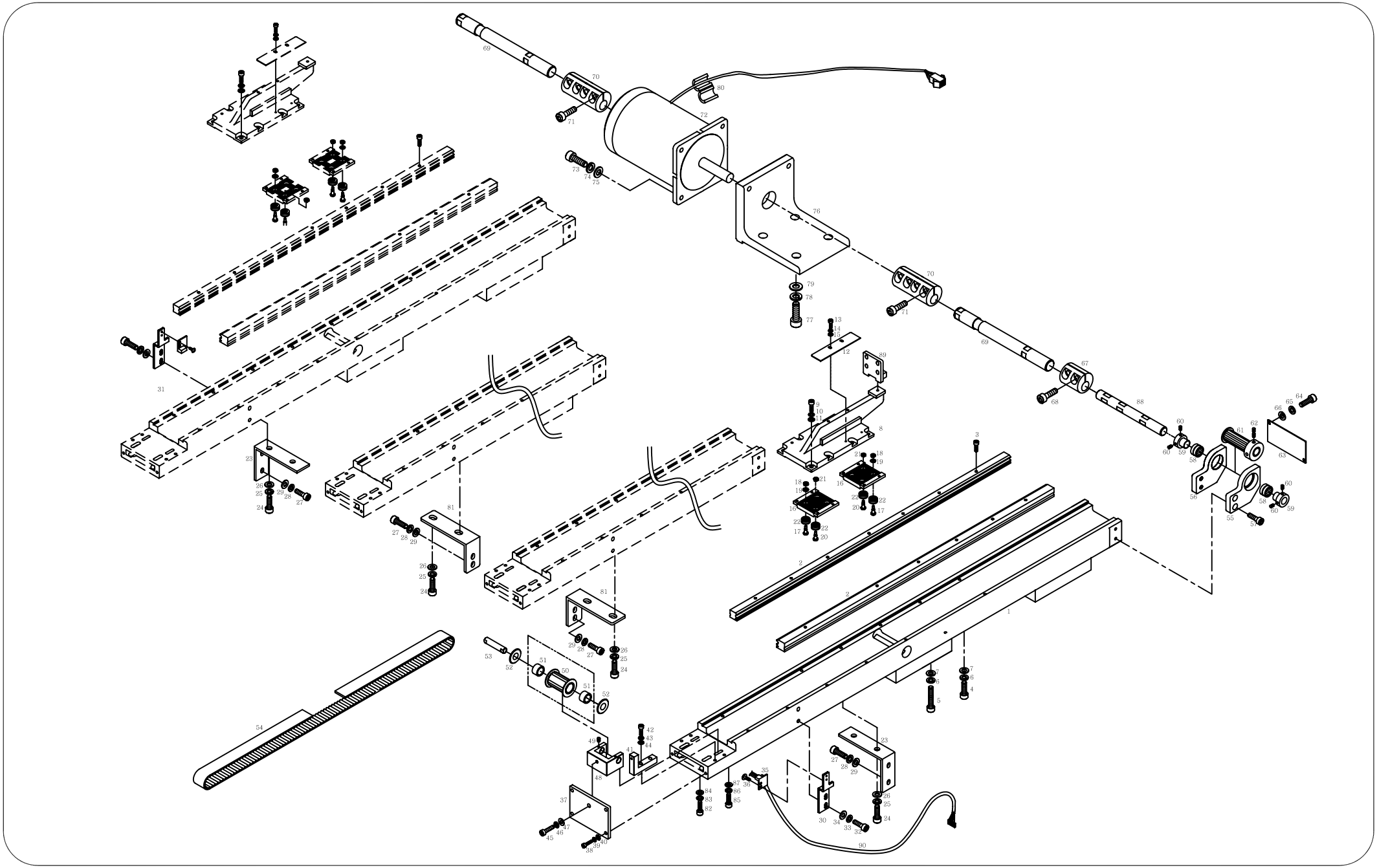

Ref.No	Part No.	Part Names	Q'ty
M1001	GP-004930-00	Y-LM Guide Frame L620	4
M1002	GP-004147-00	Cam Roller Guide Rail (L590)	8
M1003	04016MC-4113	CAM ROLLER GUIDE FIXED SCREW	56
M1004	02033SC-4113	Hex. Socket Bolt	16
M1005	03003SC-4113	Hex. Socket Bolt "B"(M8*L35)	12
M1006	15095SW-3115	Spring Washer (@8)	28
M1007	04029SW-A001	Stud Bolt Washer(S) (@8)	28
M1008	GP-005021-00	Bracker For X-Y Connecting	4
M1009	07016SC-7113	Hex.Socket Bolt (M4*L12)	32
M1010	18014SW-3115	Spring Washer (@4-No2)	32
M1011	05009SW-1111	Washer (@4-L)	32
M1012	03010400UH00	Plate For Y-Sensing	2
M1013	22006SC-7113	Hex. Socket Bolt (M3*L8)	4
M1014	11019SW-9115	Spring Washer (3@)	4
M1015	08011SW-1111	Spring Washer (@3-S)	4
M1016	16104CL-H001	Belt Catcher Plate (Y)	8
M1017	15002CW-B001	Cam Roller Stud (A)	16
M1018	15029SN-3211	Hex. Nut (M4-No2)	16
M1019	02028SW-9115	Spring Washer (@4)	16
M1020	15003CW-B001	Cam Roller Stud (B)	16
M1021	12010SN-1211	Hex.Nut (M5)	16
M1022	15001BR-B001	Cam Roller Baearing	32
M1023	16074PR-UK06	Y-Lm Support Fixing Plate	2
M1024	14002SC-7113	Hex.Socket Bolt (M6*L15)	8
M1025	16014SW-4115	Spring Washer (@6)	8
M1026	08057SW-1111	Washer (@6)	8
M1027	03016SC-4113	Hex. Socket Bolt (M5*L15)	8
M1028	18048SW-3115	Spring Washer (@5)	8
M1029	16018SW-1111	Washer (@5)	8
M1030	03101300UH00	Sensor Bracket	1
M1031	03101300UH00	Sensor Bracket	1
M1032	02015SC-7113	Hex.Socket Bolt(M4*L10)	4
M1033	02028SW-9115	Spring Washer (@4)	4
M1034	05009SW-1111	Washer (@4-L)	4
M1035	02107300UH80	Cable (Sh-73)	2
M1036	06010SC-8118	Plus Screw (M3*L4)	4
M1037	03100600UH00	Tension Adjusting Plate	4
M1038	07016SC-7113	Hex.Socket Bolt (M4*L12)	8
M1039	18014SW-3115	Spring Washer (@4-No2)	8
M1040	18015SW-3111	Washer (4@)	16

Ref. No	Part No.	Part Names	Q'ty
M1041	03100700UH00	Fixed Block	4
M1042	11029SC-4113	Hex. Socket Bolt (M4*L20)	4
M1043	18014SW-3115	Spring Washer (@4-No2)	4
M1044	18015SW-3111	Washer (4@)	4
M1045	15030SC-7113	Hex. Socket Bolt (M5*L30)	4
M1046	18048SW-3115	Spring Washer (@5)	4
M1047	16018SW-1111	Washer (@5)	4
M1048	03100500UH00	Y-Tension Adjusting Bracket	4
M1049	08007SC-4517	Hex. Socket Set Screw (M3*L5)	8
M1050	04500100U000	Y-Drive Timing Pulley	4
M1051	12018BR-T121	Neddle Bearing Hk1010(Ina)	8
M1052	12019BR-T121	Fiber Washer R-Tw1020	8
M1053	16100CW-UK06	Timing Pulley Shaft (Y)	4
M1054	03100400UH01	Y-Driving Timing Belt	4
M1055	03101000UH00	Y-Bearing Bracket (R)	4
M1056	03100900UH00	Y-Bearing Bracket (L)	4
M1057	08091SC-7113	Hex. Socket Bolt (M6*L20)	16
M1058	13026BR-T121	Needle Bearing (6002Z)	4
M1059	03002700T000	Bearing Collar	8
M1060	03037AF-A001	Driver Screw	16
M1061	04001000U000	Y-Drive Timing Pulley	4
M1062	04014SC-4517	Hex.Socket Set Screw(M5*L5)	16
M1063	03101100UH00	Y-Bearing Bracket Cover	4
M1064	07035SC-7113	Bracket Screw (M3*L6)	16
M1065	11019SW-9115	Spring Washer (3@)	16
M1066	08011SW-1111	Spring Washer (@3-S)	16
M1067	03005100U000	Coupling "A"	4
M1068	03016SC-4113	Hex. Socket Bolt (M5*L15)	8
M1069	03100800UH60	Y-Driving Shaft "A"	4
M1070	03003800B000	Coupling	4
M1071	08091SC-7113	Hex. Socket Bolt (M6*L20)	16
M1072	16055MT-UK06	Y Motor	2
M1073	08062SC-7113	Hex.Socket Bolt (M5*L20)	8
M1074	18048SW-3115	Spring Washer (@5)	8
M1075	16018SW-1111	Washer (@5)	8
M1076	15057CS-UK01	Y-Driving Motor Bracket	2
M1077	14027SC-4113	Hex.Socket Bolt (M8*L30)	8
M1078	15095SW-3115	Spring Washer (@8)	8
M1079	04029SW-A001	Stud Bolt Washer(S) (@8)	8
M1080	15045EL-UK01	Bid (L)	2

M1

Y-Axis Drive System (UH1504D)

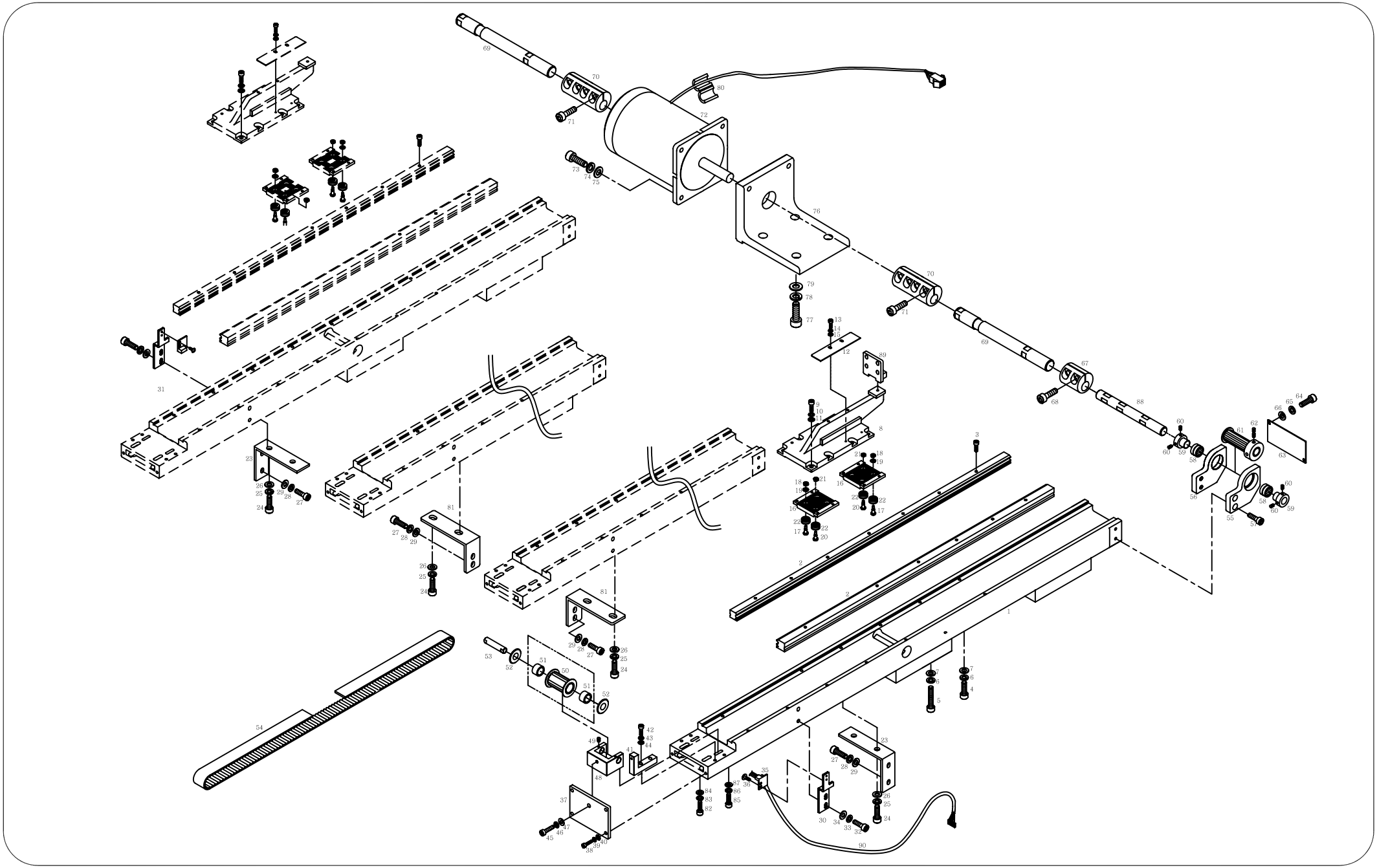

Ref.No	Part No.	Part Names	Q'ty
M1081	GP-005022-00	Y-Lm Support Fixing Plate(A)	2
M1082	08062SC-7113	Hex. Socket Bolt (M5*L20)	8
M1083	18048SW-3115	Spring Washer (@5)	8
M1084	16018SW-1111	Washer (@5)	8
M1085	03016SC-4113	Hex. Socket Bolt (M5*L15)	4
M1086	18014SW-3115	Spring Washer (@4-No2)	4
M1087	18015SW-3111	Washer (4@)	4
M1088	GP-004944-00	Y-Driving Shaft	4
M1089	03101500UH00	Bracket for X-Y Sub Connecting	4
M1090	TTS-42-01	Y-ORIGIN IN Connecting Cable	1

Ref. No	Part No.	Part Names	Q'ty

M2 Y-Axis Drive System (UH1506D,UH1508D)

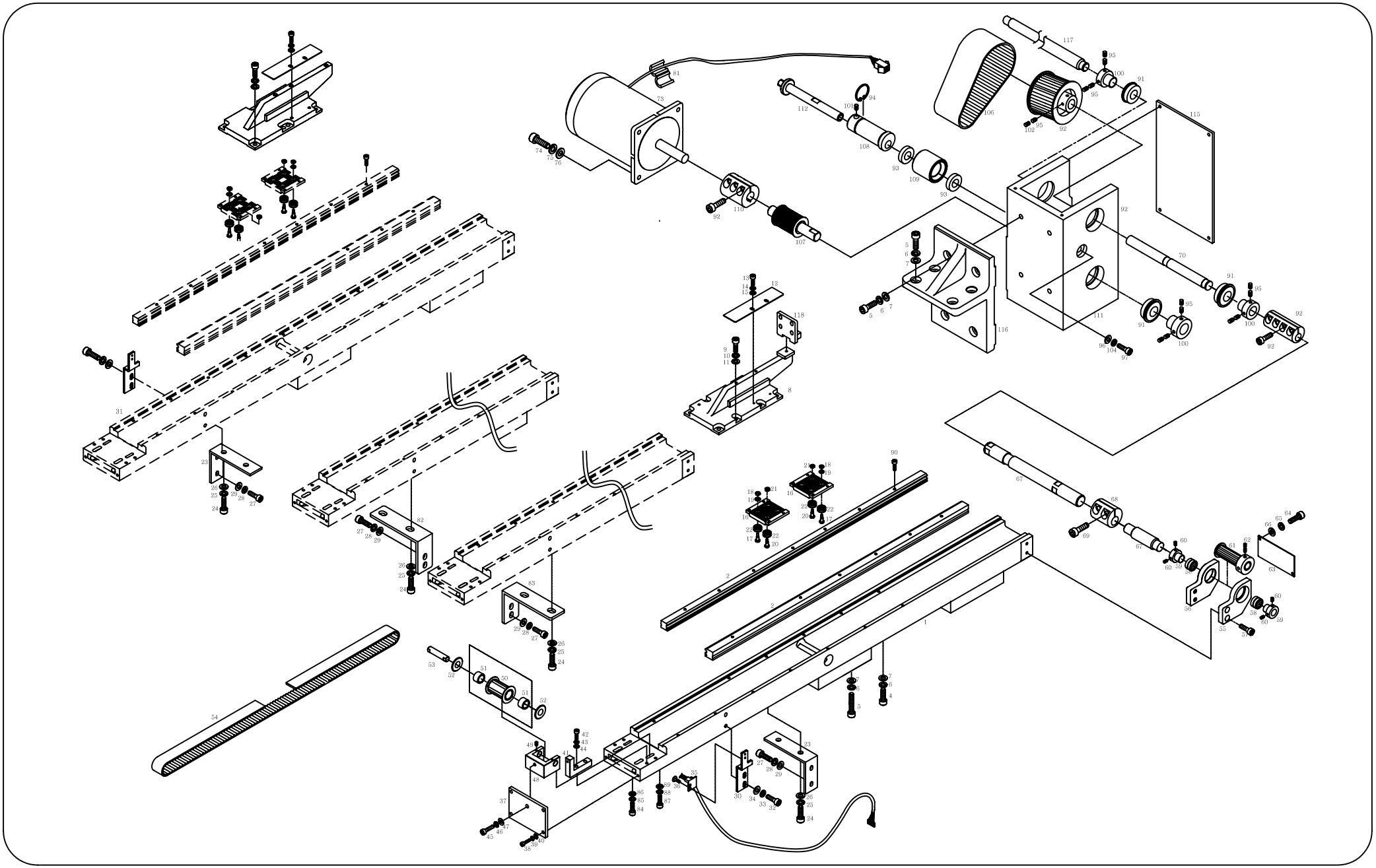

Ref.No	Part No.	Part Names	Q'ty
M2001	03003000UH60	Y-LM Guide Frame L620	4
M2002	03100100UH01	Cam Roller Guide Rail (L590)	8
M2004	14027SC-4113	Hex. Socket Bolt	16
M2005	03003SC-4113	Hex. Socket Bolt "B"(M8*L35)	20
M2006	15095SW-3115	Spring Washer (@8)	36
M2007	04029SW-A001	Stud Bolt Washer(S) (@8)	36
M2008	GP-005021-00	Bracker For X-Y Connecting	4
M2009	07016SC-7113	Hex.Socket Bolt (M4*L12)	32
M2010	18014SW-3115	Spring Washer (@4-No2)	32
M2011	18015SW-3111	Washer (@4-L)	32
M2012	03101400UH00	Plate For Y-Sensing	2
M2013	22006SC-7113	Hex. Socket Bolt (M3*L8)	4
M2014	11019SW-9115	Spring Washer (3@)	4
M2015	08011SW-1111	Spring Washer (@3-S)	4
M2016	16104CL-H001	Belt Catcher Plate (Y)	8
M2017	02028SW-9115	Cam Roller Stud (A)	16
M2018	15029SN-3211	Hex. Nut (M4-No2)	16
M2019	02028SW-9115	Spring Washer (@4)	16
M2020	15003CW-B001	Cam Roller Stud (B)	16
M2021	12010SN-1211	Hex.Nut (M5)	16
M2022	15001BR-B001	Cam Roller Baearing	32
M2023	16074PR-UK06	Y-Lm Support Fixing Plate	2
M2024	14006SC-7113	Hex.Socket Bolt (M8*L15)	8
M2025	15095SW-3115	Spring Washer (@6)	8
M2026	08041SW-1111	Washer (@6)	8
M2027	08076SC-7113	Hex. Socket Bolt (M5*L15)	8
M2028	18048SW-3115	Spring Washer (@5)	8
M2029	16018SW-1111	Washer (@5)	8
M2030	03101300UH00	Bracket for Y-Sensor	2
M2031	03101300UH00	Bracket for Y-Sensor	2
M2032	02015SC-7113	Hex.Socket Bolt(M4*L10)	4
M2033	02028SW-9115	Spring Washer (@4)	4
M2034	05009SW-1111	Washer (@4-L)	4
M2035	09018EL-UK01	Sensor	2
M2036	08006SC-8118	Plus Screw (M3*L5)	4
M2037	03100600UH00	Tension Adjusting Plate	4
M2038	07016SC-7113	Hex.Socket Bolt (M4*L12)	8
M2039	18014SW-3115	Spring Washer (@4-No2)	8
M2040	18015SW-3111	Washer (4@)	16
M2041	03100700UH00	Fixed Block	4

Ref. No	Part No.	Part Names	Q'ty
M2042	11029SC-4113	Hex. Socket Bolt (M4*L20)	4
M2043	18014SW-3115	Spring Washer (@4-No2)	4
M2044	18015SW-3111	Washer (4@)	4
M2045	16028SC-7113	Hex. Socket Bolt (M5*L25)	4
M2046	18048SW-3115	Spring Washer (@5)	4
M2047	16018SW-1111	Washer (@5)	4
M2048	03100500UH00	Y-Tension Adjusting Bracket	4
M2049	08007SC-4517	Hex. Socket Set Screw (M3*L5)	8
M2050	03003400UH60	Y-Drive Timing Pulley	4
M2051	12018BR-T121	Neddle Bearing Hk1010(Ina)	8
M2052	12019BR-T121	Fiber Washer R-Tw1020	8
M2053	16100CW-UK06	Timing Pulley Shaft (Y)	4
M2054	03100400UH81	Y-Driving Timing Belt	4
M2055	GP-007144-00	Y-Bearing Bracket (R)	4
M2056	GP-007145-00	Y-Bearing Bracket (L)	4
M2057	16059SC-7113	Hex. Socket Bolt (M6*L20)	16
M2058	13026BR-T121	Needle Bearing (6002Z)	4
M2059	03002700T000	Bearing Collar	8
M2060	03037AF-A001	Driver Screw	16
M2061	04001000 E000	Y-Drive Timing Pulley	4
M2062	04014SC-4517	Hex.Socket Set Screw(M5*L5)	16
M2063	03101100UH00	Y-Bearing Bracket Cover	4
M2064	07035SC-7113	Bracket Screw (M3*L6)	16
M2065	11019SW-9115	Spring Washer (3@)	16
M2066	08011SW-1111	Spring Washer (@3-S)	16
M2067	GP-007148-00	Y-Driving Shaft "A" UH1506D	2
	GP-007148-00	Y-Driving Shaft "A" UH1208D	2
M2070	GP-007516-00	Y-Driving Shaft "B" UH1506D	2
	GP-004159-01	Y-Driving Shaft UH1208D	2
M2073	16059MT-E131	Y Motor (103H89222-5212)	2
M2074	14046SC-7113	Hex.Socket Bolt (M6*L30)	8
M2075	16014SW-4115	Spring Washer (@6)	8
M2076	08057SW-1111	Washer (@6)	8
M2082	GP-004150-00	Y-LM Support Fixing Plate(A)	1
M2083	GP-004150-00	Y-LM Support Fixing Plate(A)	1
M2084	08062SC-7113	Hex. Socket Bolt (M5*L20)	8
M2085	18048SW-3115	Spring Washer (@5)	8
M2086	16018SW-1111	Washer (@5)	8
M2087	03016SC-4113	Hex. Socket Bolt (M5*L15)	4
M2088	18014SW-3115	Spring Washer (@4-No2)	4

M2 Y-Axis Drive System (UH1506D,UH1508D)

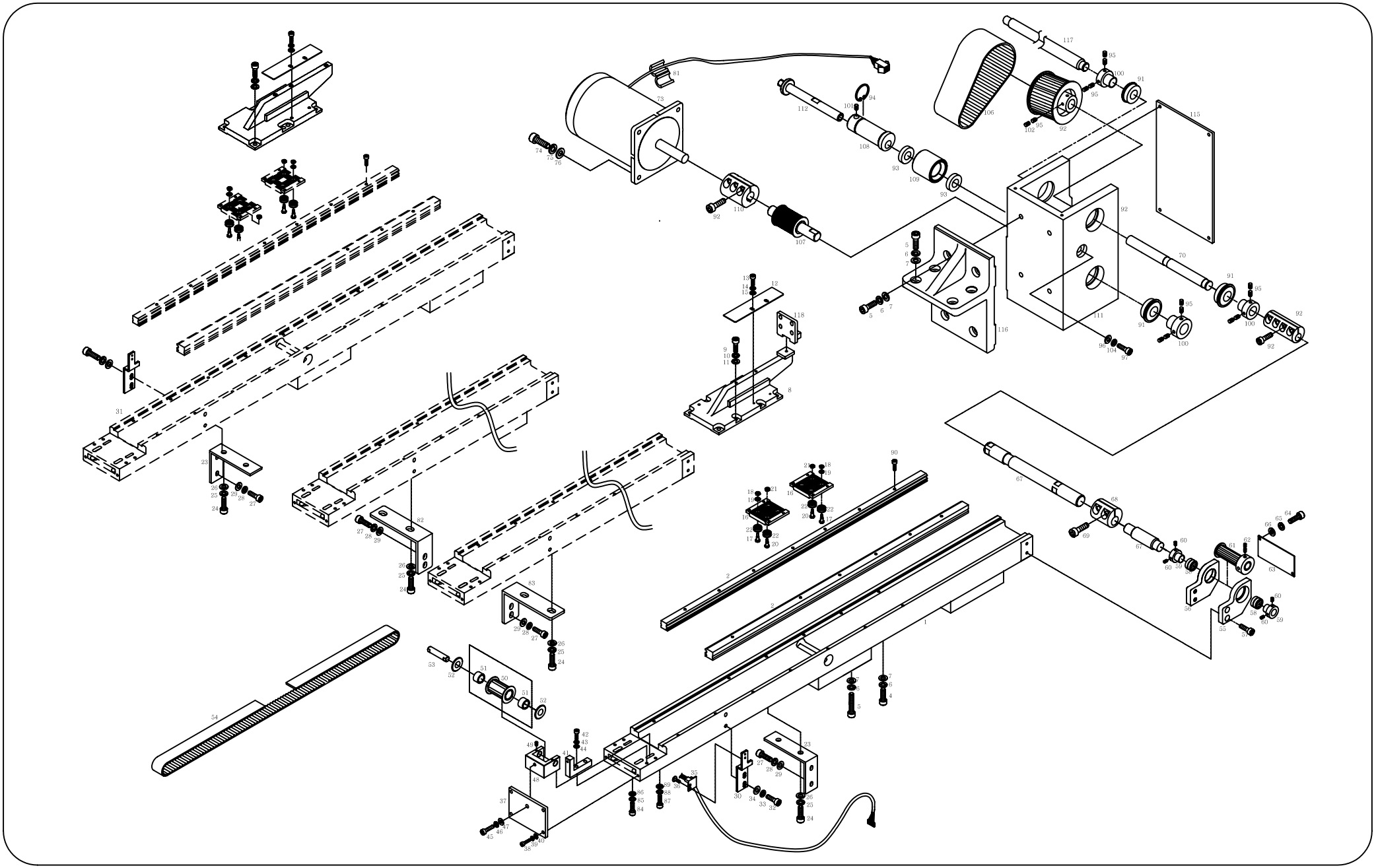

Ref.No	Part No.	Part Names	Q'ty
M2089	18015SW-3111	Washer (4@)	4
M2090	04016MC-4113	CAM ROLLER GUIDE FIXED SCREW	56
M2091	01029BR-A001	Bearing(6004zz)	3
M2092	03200200B000	Lower Shaft Timming Pulley	1
M2093	03200400I000	Roller Bearing	2
M2094	03200700I000	C-Ring	1
M2095	04012AF-A001	Screw(15/64-28)	8
M2096	08057SW-1111	Washer	5
M2097	14002SC-7113	Hex. Socket Bolt (M6*L15)	1
M2098	14005SC-4517	Hex. Socket Bolt (M8*L8)	2
M2099	14046SC-7113	Hex. Socket Bolt (M6*L30)	4
M2100	14058CW--A001	Bearing Stopper Collar	3
M2101	14060AF-4517	Hex. Socket Bolt (M6*L6)	1
M2102	14061AF-4517	Hex. Socket Bolt (M8*L8)	2
M2103	15047MT-E131	X-Driving Motor	1
M2104	16014SW-4115	Spring Washer (@6)	5
M2105	17039SC-4113	Hex. Socket Bolt (M6*L17)	3
M2106	BE-000023-00	Y-Driving Timming Belt	1
M2107	GP-005376-00	Y-Driving Timming Pulley	1
M2108	GP-005378-00	Idler Bush	1
M2109	GP-005379-00	Tension Adjusting Roller	1
M2110	GP-005380-00	Coupling	1
M2111	GP-007511-00	Y-Driving Box	1
M2112	GP-007512-00	Idler Shaft	1
M2113	GP-007515-00	Y-Driving Box Driven Shaft	1
M2114	GP-005021-00	X-Y Connecting Bracket	4
M2115	GP-005374-00	Y-Driving Box CoverA	2
M2116	GP-007513-00	Y-Driving Box Bracket	2
M2117	GP-007517-00	Y-Driving Shaft "C" UH1506D	2
	03100800UH60	Y-Driving Shaft "C" UH1208D	2
M2118	03101500UH00	Bracket for X-Y Sub Connecting	4

Ref. No	Part No.	Part Names	Q'ty

M3 Y-Axis Drive System (UH1512D)

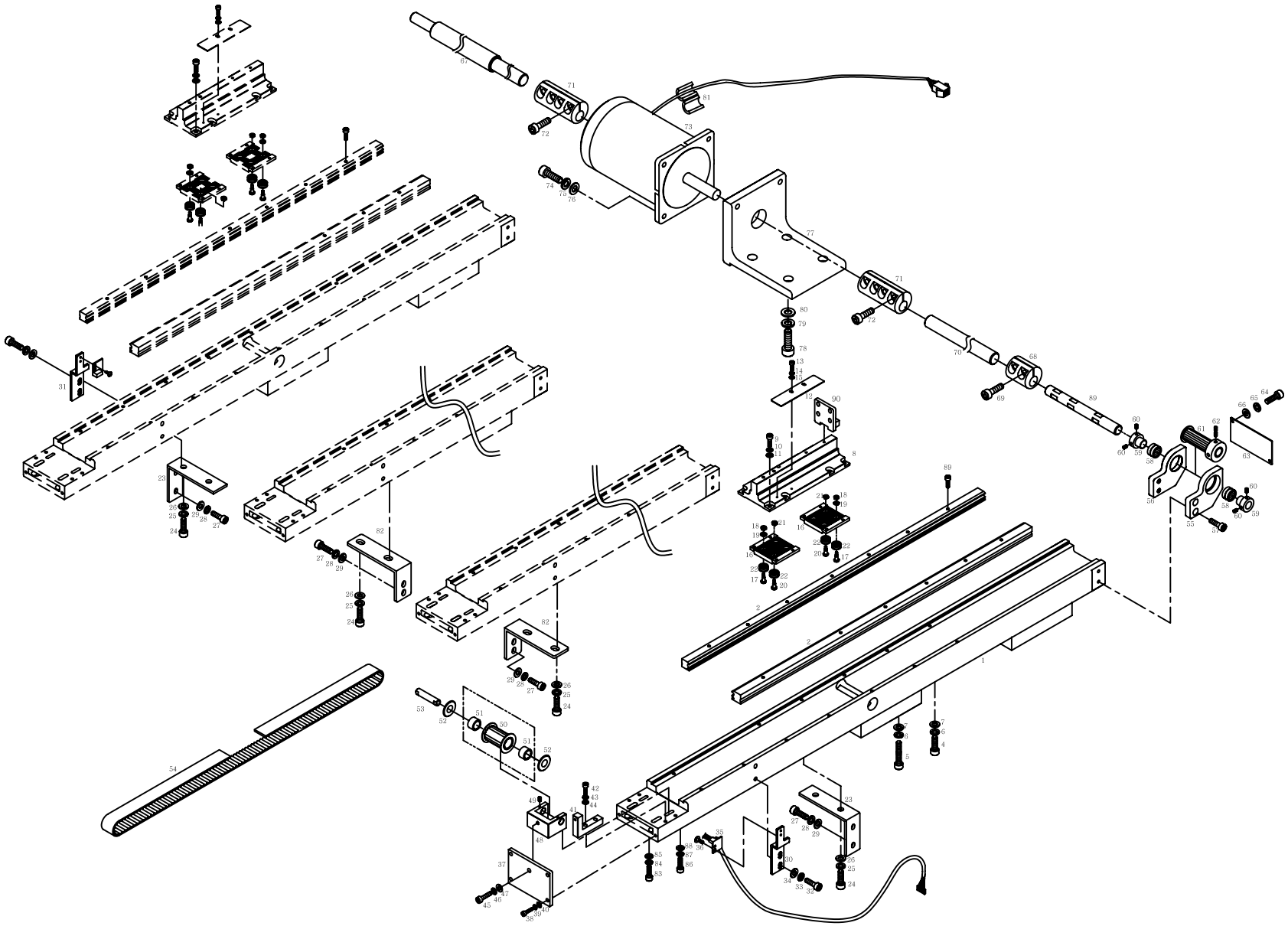

Ref.No	Part No.	Part Names	Q'ty
M3001	GP-004148,00	Y-LM Guide Frame L620	4
M3002	GP-004147,00	Cam Roller Guide Rail (L590)	8
M3003	04016MC-4113	CAM ROLLER GUIDE FIXED SCREW	56
M3004	02033SC-4113	Hex. Socket Bolt	16
M3005	03003SC-4113	Hex. Socket Bolt "B"(M8*L35)	12
M3006	15095SW-3115	Spring Washer (@8)	28
M3007	04029SW-A001	Stud Bolt Washer(S) (@8)	28
M3008	GP-004149,00	Bracker For X-Y Connecting	4
M3009	07016SC-7113	Hex.Socket Bolt (M4*L12)	32
M3010	18014SW-3115	Spring Washer (@4-No2)	32
M3011	05009SW-1111	Washer (@4-L)	32
M3012	03003800UH60	Plate For Y-Sensing	2
M3013	22006SC-7113	Hex. Socket Bolt (M3*L8)	4
M3014	11019SW-9115	Spring Washer (3@)	4
M3015	08011SW-1111	Spring Washer (@3-S)	4
M3016	16104CL-H001	Belt Catcher Plate (Y)	8
M3017	15002CW-B001	Cam Roller Stud (A)	16
M3018	15029SN-3211	Hex. Nut (M4-No2)	16
M3019	02028SW-9115	Spring Washer (@4)	16
M3020	15003CW-B001	Cam Roller Stud (B)	16
M3021	12010SN-1211	Hex.Nut (M5)	16
M3022	15001BR-B001	Cam Roller Baearing	32
M3023	16074PR-UK06	Y-Lm Support Fixing Plate	2
M3024	14002SC-7113	Hex.Socket Bolt (M6*L15)	8
M3025	16014SW-4115	Spring Washer (@6)	8
M3026	08057SW-1111	Washer (@6)	8
M3027	03016SC-4113	Hex. Socket Bolt (M5*L15)	8
M3028	18048SW-3115	Spring Washer (@5)	8
M3029	16018SW-1111	Washer (@5)	8
M3030	03101300UH00	Sensor Bracket	1
M3031	03101300UH00	Sensor Bracket	1
M3032	02015SC-7113	Hex.Socket Bolt(M4*L10)	4
M3033	02028SW-9115	Spring Washer (@4)	4
M3034	05009SW-1111	Washer (@4-L)	4
M3035	02107300UH80	Cable (Sh-73)	2
M3036	06010SC-8118	Plus Screw (M3*L4)	4
M3037	03100600UH00	Tension Adjusting Plate	4
M3038	07016SC-7113	Hex.Socket Bolt (M4*L12)	8
M3039	18014SW-3115	Spring Washer (@4-No2)	8
M3040	18015SW-3111	Washer (4@)	16

Ref. No	Part No.	Part Names	Q'ty
M3041	03100700UH00	Fixed Block	4
M3042	11029SC-4113	Hex. Socket Bolt (M4*L20)	4
M3043	18014SW-3115	Spring Washer (@4-No2)	4
M3044	18015SW-3111	Washer (4@)	4
M3045	15030SC-7113	Hex. Socket Bolt (M5*L30)	4
M3046	18048SW-3115	Spring Washer (@5)	4
M3047	16018SW-1111	Washer (@5)	4
M3048	03100500UH00	Y-Tension Adjusting Bracket	4
M3049	08007SC-4517	Hex. Socket Set Screw (M3*L5)	8
M3050	04001000 E000	Y-Drive Timing Pulley	4
M3051	12018BR-T121	Neddle Bearing Hk1010(Ina)	8
M3052	12019BR-T121	Fiber Washer R-Tw1020	8
M3053	16100CW-UK06	Timing Pulley Shaft (Y)	4
M3054	-	Y-Driving Timing Belt	4
M3055	03101000UH00	Y-Bearing Bracket (R)	4
M3056	03100900UH00	Y-Bearing Bracket (L)	4
M3057	08091SC-7113	Hex. Socket Bolt (M6*L20)	16
M3058	13026BR-T121	Needle Bearing (6002Z)	4
M3059	03002700T000	Bearing Collar	8
M3060	03037AF-A001	Driver Screw	16
M3061	03003500UH60	Y-Drive Timing Pulley	4
M3062	04014SC-4517	Hex.Socket Set Screw(M5*L5)	16
M3063	03101100UH00	Y-Bearing Bracket Cover	4
M3064	07035SC-7113	Bracket Screw (M3*L6)	16
M3065	11019SW-9115	Spring Washer (3@)	16
M3066	08011SW-1111	Spring Washer (@3-S)	16
M3067	GP-007148-00	Y-Driving Shaft "A"	2
M3068	03005100U000	Coupling "A"	4
M3069	03016SC-4113	Hex. Socket Bolt (M5*L15)	8
M3070	GP-005078-01	Y-Driving Shaft UH1512D	4
M3071	03003800B000	Coupling	4
M3072	08091SC-7113	Hex. Socket Bolt (M6*L20)	16
M3073	16059MT-E131	Y Motor (103H89222-5212)	2
M3074	14046SC-7113	Hex.Socket Bolt (M6*L30)	8
M3075	16014SW-4115	Spring Washer (@6)	8
M3076	08057SW-1111	Washer (@6)	8
M3077	03100500UH80	Y-Driving Motor Bracket	2
M3078	14027SC-4113	Hex.Socket Bolt (M8*L30)	8
M3079	15095SW-3115	Spring Washer (@8)	8
M3080	04029SW-A001	Stud Bolt Washer(S) (@8)	8

M3 Y-Axis Drive System (UH1512D)

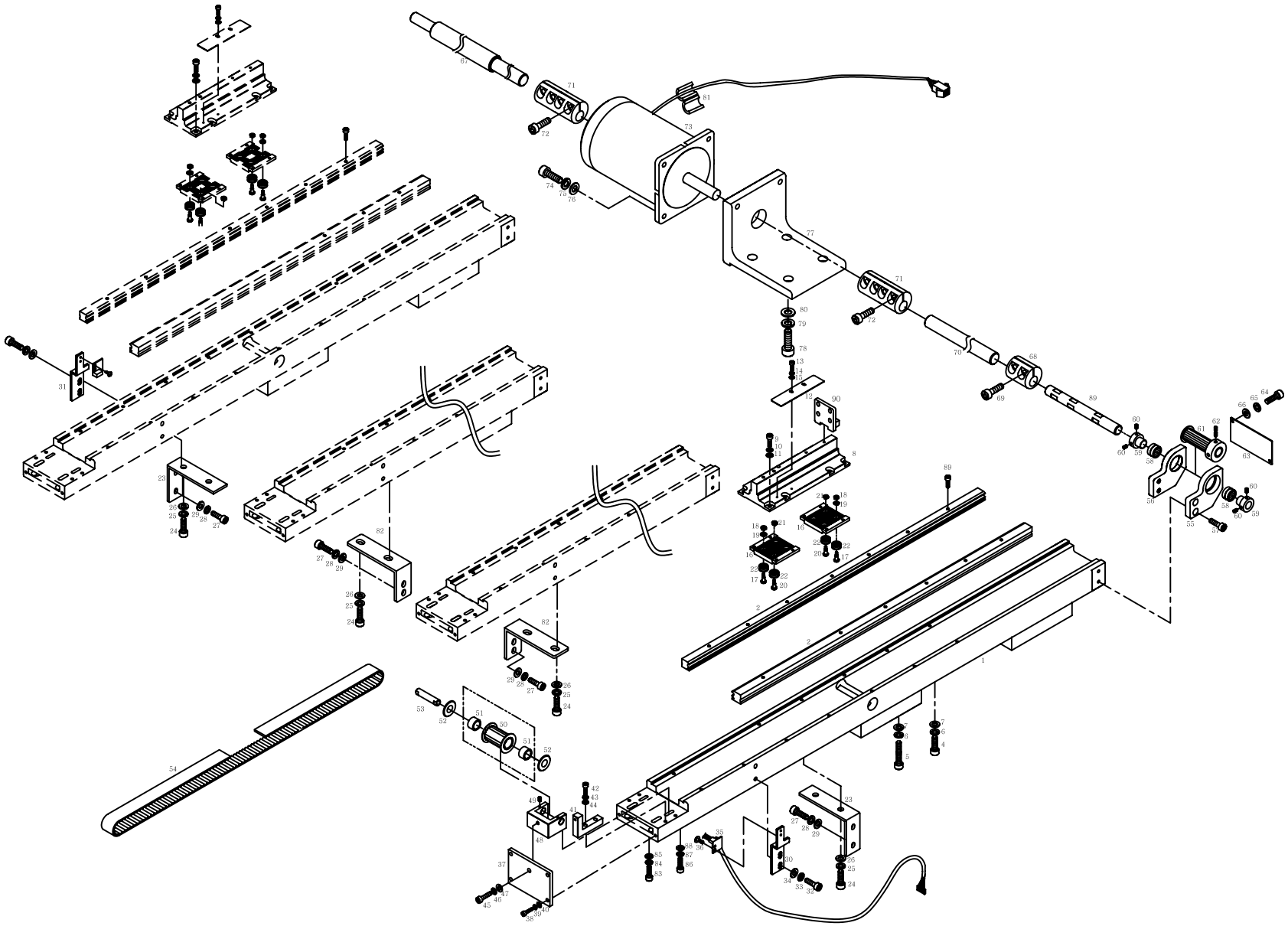

Ref.No	Part No.	Part Names	Q'ty
M3081	15045EL-UK01	Bid (L)	2
M3082	GP-004150,00	Bracket for Y-Sensor	2
M3083	08062SC-7113	Hex. Socket Bolt (M5*L20)	8
M3084	18048SW-3115	Spring Washer (@5)	8
M3085	16018SW-1111	Washer (@5)	8
M3086	03016SC-4113	Hex. Socket Bolt (M5*L15)	4
M3087	18014SW-3115	Spring Washer (@4-No2)	4
M3088	18015SW-3111	Washer (4@)	4
M3089	03100800UH60	Y-Driving Shaft "C"	2
M3090	03101500UH00	Bracket for X-Y Sub Connecting	4

Ref. No	Part No.	Part Names	Q'ty

N1 Tubular Frame (UH1504D)

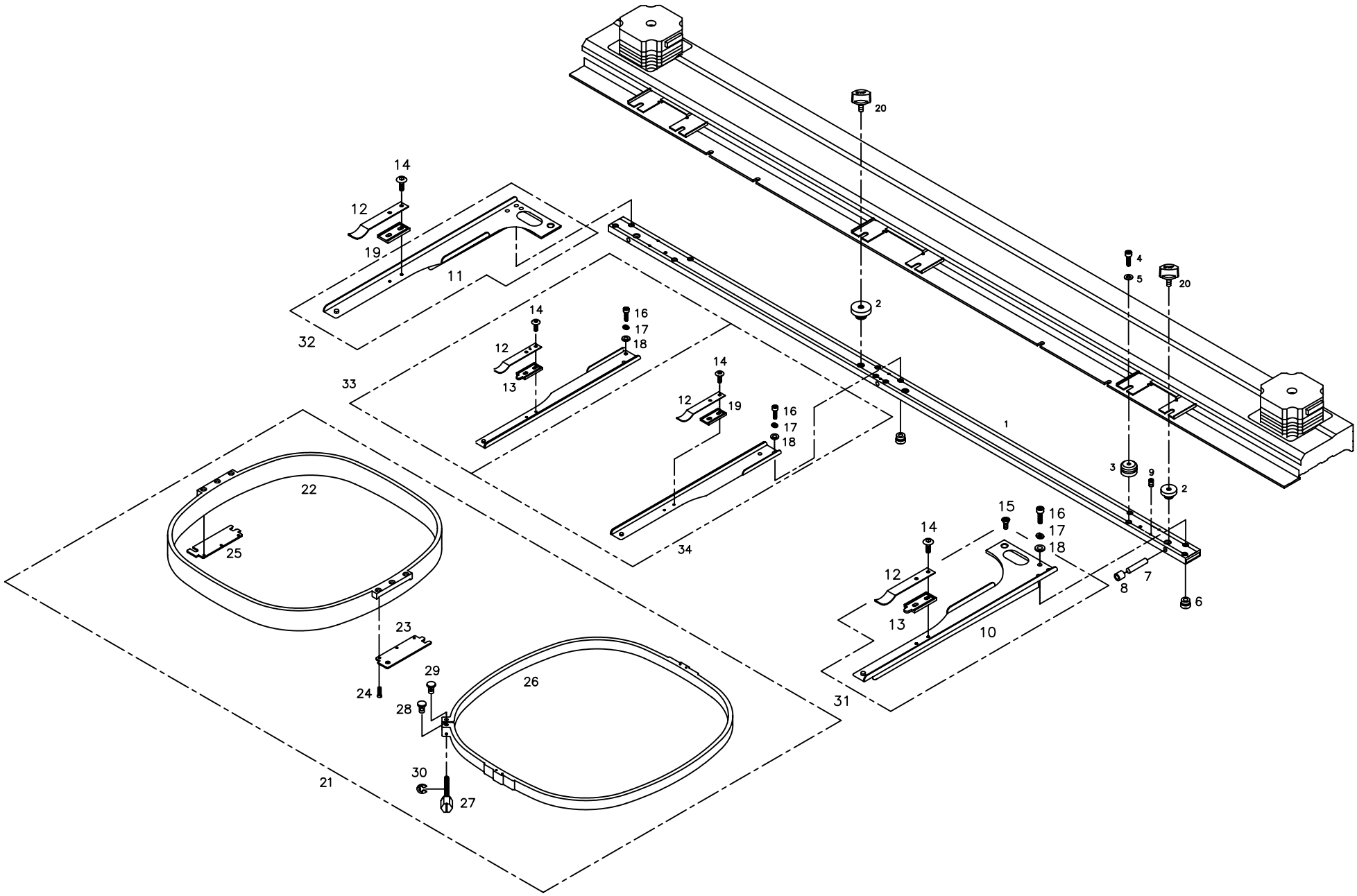

Ref.No	Part No.	Part Names	Q'ty
N1001	GP-004945-00	Tubular Frame	2
N1002	22002CW-UK01	Screw Bush "A"	8
N1003	22003CW-UK01	Location Block	4
N1004	11029SC-4113	Hex. Socket Bolt (M4*L20)	4
N1005	05009SW-1111	Washer (@4-L)	4
N1006	GP-010408-00	SCREW BUSH C	48
N1007	22007BR-UK01	Bearing Pin	6
N1008	22009BR-UK01	Needle Bearing (Taf51010)	6
N1009	03022SC-4517	Hex. Socket Set Screw(M4*L5)	12
N1010	09100100U000	Attachment (R)	2
N1011	09200100U000	Attachment (L)	2
N1012	22005PR-T121	Clip	8
N1013	22004PM-T121	Clip Bracket (R)	56
N1014	09100200U000	Fixed Clip Bracket Screw	16
N1015	02002SC-7119	Pluss Screw (M4*L8)	4
N1016	02015SC-7113	Hex.Socket Bolt(M4*L10)	4
N1017	18014SW-3115	Spring Washer (@4-No2)	16
N1018	18015SW-3111	Washer (4@)	16
N1019	22003PM-T121	Clip Bracket (L)	4
N1020	09000100U000	Tubular Frame Fixing Screw	8
N1021	22038BM-UK01	Tubular Set	8
N1022	22038PM-UK01	Tubular (Inner) 45*44	8
N1023	17014PR-UK01	Tubular Holder "A"	8
N1024	10011SC-8119	Plus Screw (M3*L6)	48
N1025	17015PR-UK01	Tubular Holder "B"	8
N1026	22043PM-UK01	Tubular (Outer) 45*44	8
N1027	22044CW-UK01	Adjusting Bolt	8
N1028	22045CW-UK01	Adjusting Bolt Guide	8
N1029	22046CW-UK01	Adjusting Nut	8
N1030	15159SR-4013	E-Ring (3@)	8
N1031	09100000U000	Attachment (R)	2
N1032	09200000U000	Attachment (L)	2
N1033	09100410U000	Attachment (Set-L)	2
N1034	09100510U000	Attachment (Set-R)	2

Ref. No	Part No.	Part Names	Q'ty

N2 Tubular Frame (UH1506D)

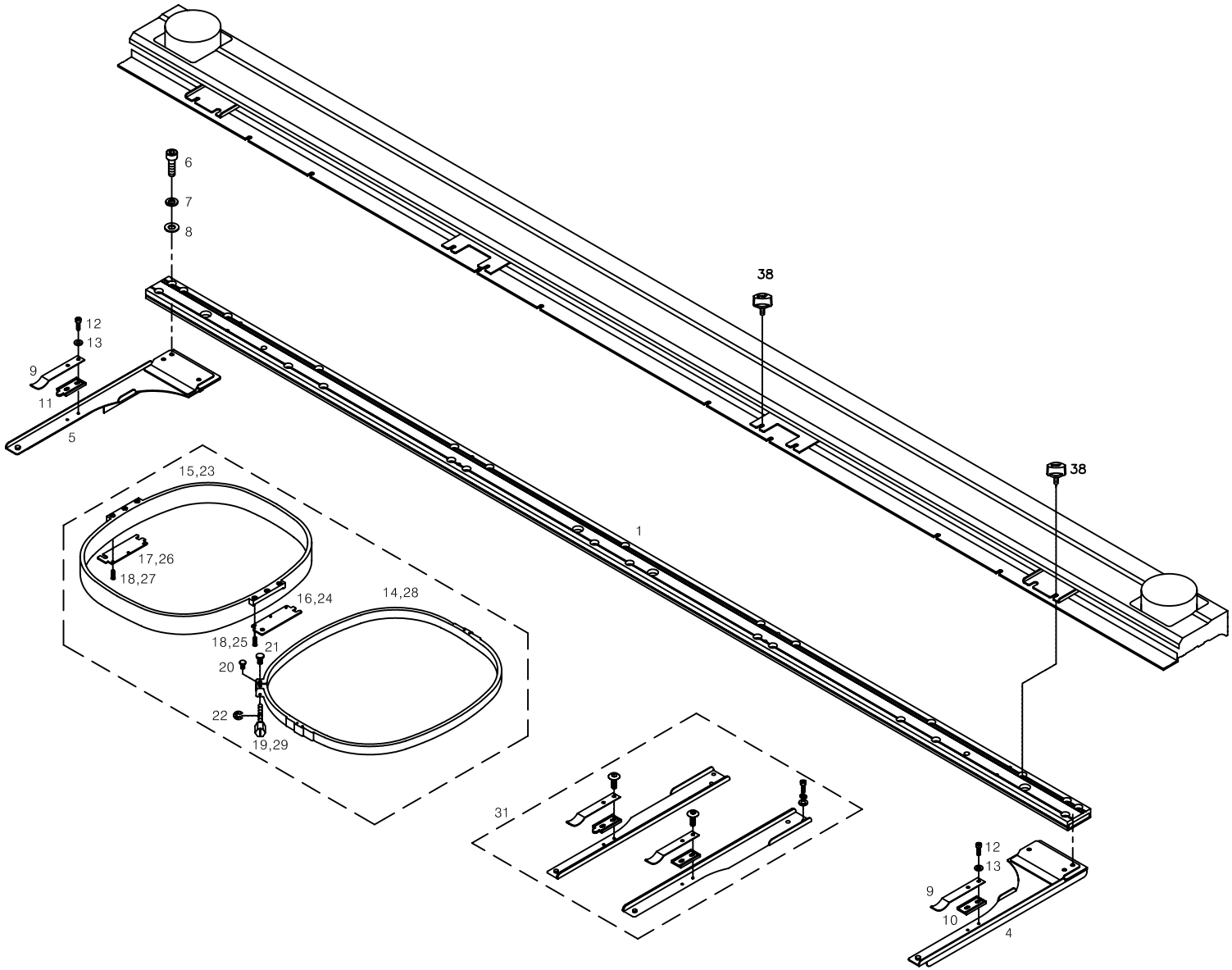

Ref.No	Part No.	Part Names	Q'ty
N2001	GP-007526-00	Tubular Frame	2
N2002	18070CW-A021	Insert Bushing	16
N2003	05012MC-7113	CAP FRAME FIXED SCREW	16
N2004	09100200UHF0	Attachment(R) - Set	6
N2005	09100300UHF0	Attachment(L) - Set	6
N2006	05008SC-4113	Hex.Socket Bolt (M4*L16)	36
N2007	18014SW-3115	Spring Washer (@4-No2)	36
N2008	18015SW-3111	Washer (4@)	36
N2009	22005PR-T121	Clip	12
N2010	22004PM-T121	Clip Bracket (R)	6
N2011	22003PM-T121	Clip Bracket (L)	6
N2012	22006SC-7113	Hex. Socket Bolt (M3*L8)	24
N2013	06011SW-2111	Washer (@3)	24
N2014	08200200UH00	Tubular Frame (320*435)	12
N2015	08200100UH00	Tubular Frame (320*435)	12
N2016	17014PR-UK01	Tubular Holder "A"	12
N2017	17015PR-UK01	Tubular Holder "B"	12
N2018	10011SC-8119	Plus Screw (M3*L6)	36
N2019	22044CW-UK01	Adjusting Bolt	12
N2020	22045CW-UK01	Adjusting Bolt Guide	12
N2021	22046CW-UK01	Adjusting Nut	12
N2022	15159SR-4013	E-Ring (3@)	12
N2023	22017BM-UH16	Sqaure Frame (312*312) Ass'Y	12
N2024	08200300UH00	Tubular Frame Holder (L)	12
N2025	15064AF-A001	C.S Screw (M3*L3.5)	24
N2026	08200400UH00	Tubular Frame Holder (R)	12
N2027	15064AF-A001	C.S Screw (M3*L3.5)	24
N2028	22017BM-UH16	Sqaure Frame (312*312) Ass'Y	12
N2029	22044CW-UK01	Adjusting Bolt	12
N2030	09000100U000	Tubular Frame Fixing Screw	16
N2031	09300000U000	Attachment Set	

Ref. No	Part No.	Part Names	Q'ty

N3 Tubular Frame (UH1208D)

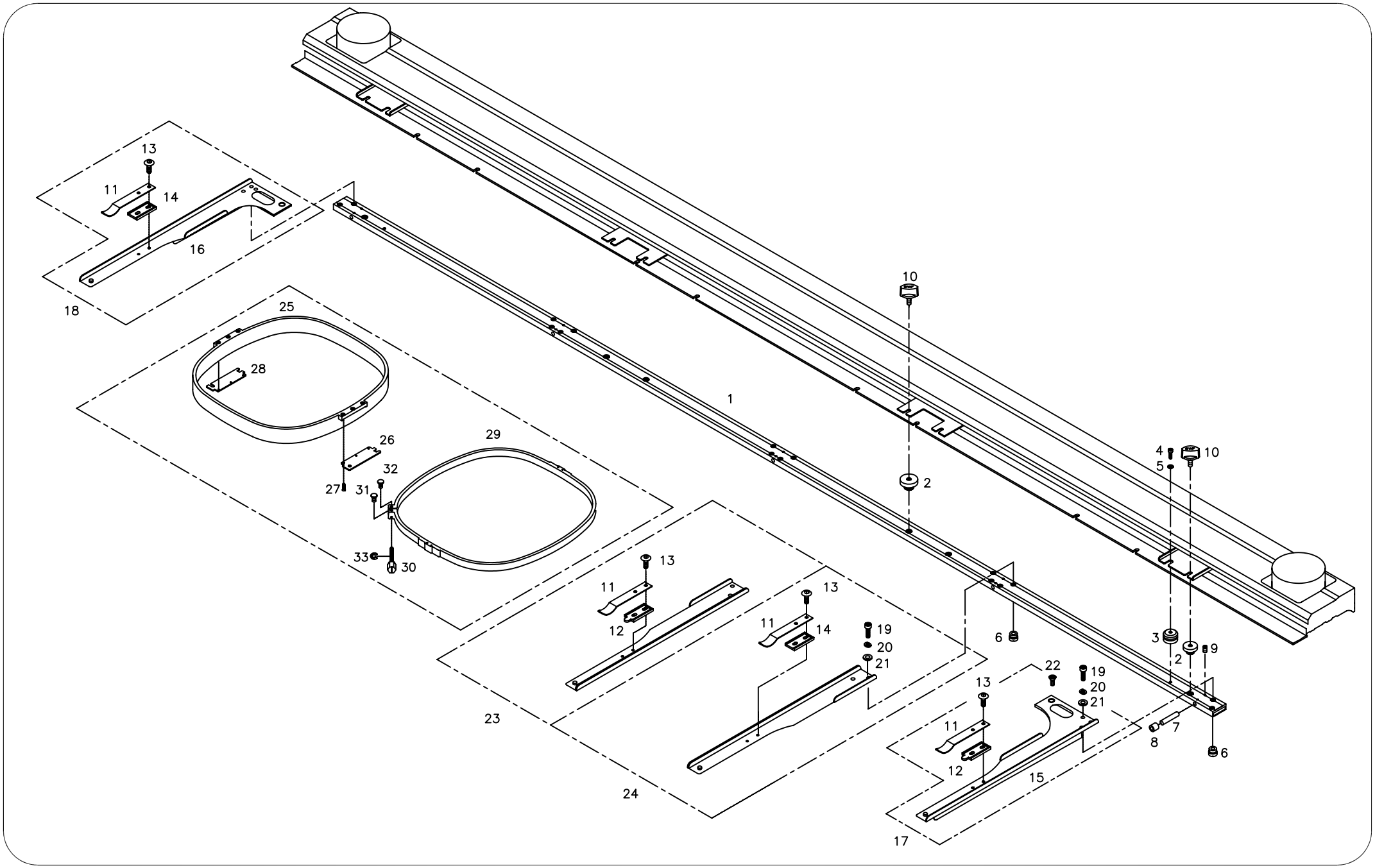

Ref.No	Part No.	Part Names	Q'ty
N3001	GP-004172-00	Tubular Frame	1
N3002	22002CW-UK01	Screw Bush "A"	6
N3003	22003CW-UK01	Location Block	2
N3004	11029SC-4113	Hex. Socket Bolt (M4*L20)	2
N3005	05009SW-1111	Washer (@4-L)	2
N3006	GP-010408-00	SCREW BUSH C	32
N3007	22007BR-UK01	Bearing Pin	5
N3008	22009BR-UK01	Needle Bearing (Taf51010)	5
N3009	03022SC-4517	Hex. Socket Set Screw(M4*L5)	10
N3010	09000100U000	Tubular Frame Fixing Screw	6
N3011	22005PR-T121	Clip	8
N3012	22004PM-T121	Clip Bracket (R)	4
N3013	09100200U000	Fixed Clip Bracket Screw	16
N3014	22003PM-T121	Clip Bracket (L)	4
N3015	09100100U000	Attachment (R)	1
N3016	09200100U000	Attachment (L)	1
N3017	09100000U000	Attachment (R)	1
N3018	09200000U000	Attachment (L)	1
N3019	02015SC-7113	Hex.Socket Bolt(M4*L10)	16
N3020	18014SW-3115	Spring Washer (@4-No2)	16
N3021	18015SW-3111	Washer (4@)	16
N3022	02002SC-7119	Pluss Screw (M4*L8)	2
N3023	09100410U000	Attachment (Set-L)	3
N3024	09100510U000	Attachment (Set-R)	3
N3025	08200100UH00	Tubular (Inner) 45*44	8
N3026	17014PR-UK01	Tubular Holder "A"	8
N3027	10011SC-8119	Plus Screw (M3*L6)	48
N3028	17015PR-UK01	Tubular Holder "B"	8
N3029	08200200UH00	Tubular (Outer) 45*44	8
N3030	22044CW-UK01	Adjusting Bolt	8
N3031	22045CW-UK01	Adjusting Bolt Guide	8
N3032	22046CW-UK01	Adjusting Nut	8
N3033	15159SR-4013	E-Ring (3@)	8

Ref. No	Part No.	Part Names	Q'ty

N4

Tubular Frame (UH1512D)

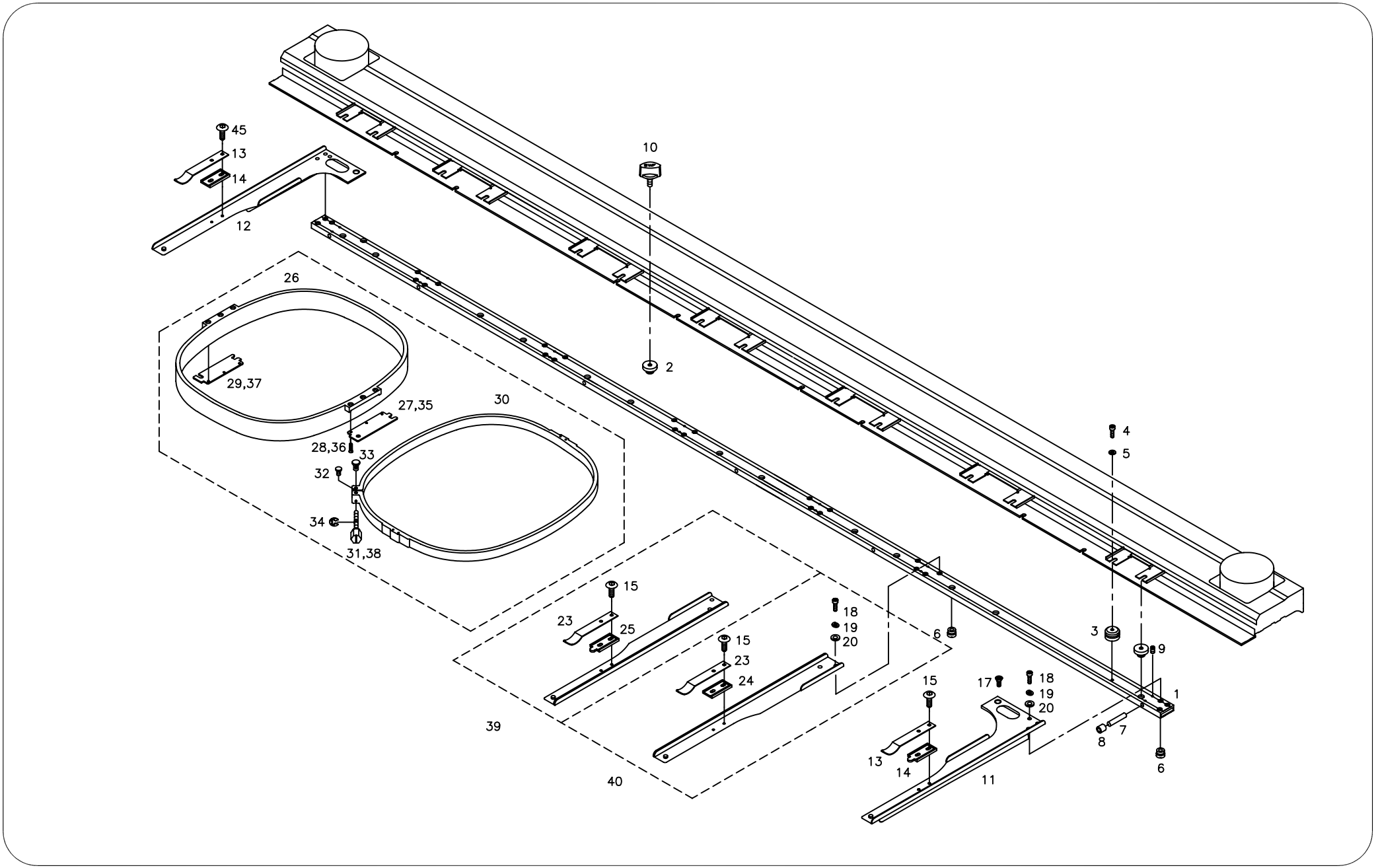

Ref.No	Part No.	Part Names	Q'ty
N4001	08100100UH60	Tubular Frame L2404	1
N4002	22002CW-UK01	Screw Bush "A"	20
N4003	22003CW-UK01	Location Block	4
N4004	11029SC-4113	Hex. Socket Bolt (M4*L20)	4
N4005	05009SW-1111	Washer (@4-L)	4
N4006	10500110B000	SCREW BUSH C (M8*P0.75)	56
N4007	22007BR-UK01	Bearing Pin	14
N4008	22009BR-UK01	Needle Bearing (Taf51010)	14
N4009	03022SC-4517	Hex. Socket Set Screw(M4*L5)	28
N4010	09000100U000	Tubular Frame Fixing Screw	20
N4011	09100100U000	Attachment (R)	2
N4012	09200100U000	Attachment (L)	2
N4013	22005PR-T121	Clip	4
N4014	22004PM-T121	Clip Bracket (R)	2
N4015	09100200U000	Fixed Clip Bracket Screw	48
N4016	17008PR-UK01	Attachment (L)	2
N4017	02002SC-7119	Pluss Screw (M4*L8)	4
N4018	02015SC-7113	Hex.Socket Bolt(M4*L10)	52
N4019	18014SW-3115	Spring Washer (@4-No2)	52
N4020	18015SW-3111	Washer (4@)	52
N4023	22005PR-T121	Clip	20
N4024	22004PM-T121	Clip Bracket (R)	10
N4025	22003PM-T121	Clip Bracket (R)	10
N4026	08200100UH00	Tubular (Inner)	24
N4027	17014PR-UK01	Tubular Holder "A"	24
N4028	10011SC-8119	Plus Screw (M3*L6)	72
N4029	17015PR-UK01	Tubular Holder "B"	24
N4030	08200200UH00	Tubular (Outer)	24
N4031	22044CW-UK01	Adjusting Bolt	24
N4032	22045CW-UK01	Adjusting Bolt Guide	24
N4033	22046CW-UK01	Adjusting Nut	24
N4034	15159SR-4013	E-Ring (3@)	24
N4035	08200300UH00	Tubular Frame Holder (L)	24
N4036	15064AF-A001	C.S Screw (M3*L3.5)	96
N4037	08200400UH00	Tubular Frame Holder (R)	24
N4038	22044CW-UK01	Adjusting Bolt	24
N4039	09100410U000	Attachment (Set-L)	10
N4040	09100510U000	Attachment (Set-R)	10

Ref. No	Part No.	Part Names	Q'ty

01 Boder Frame (UH1504D)

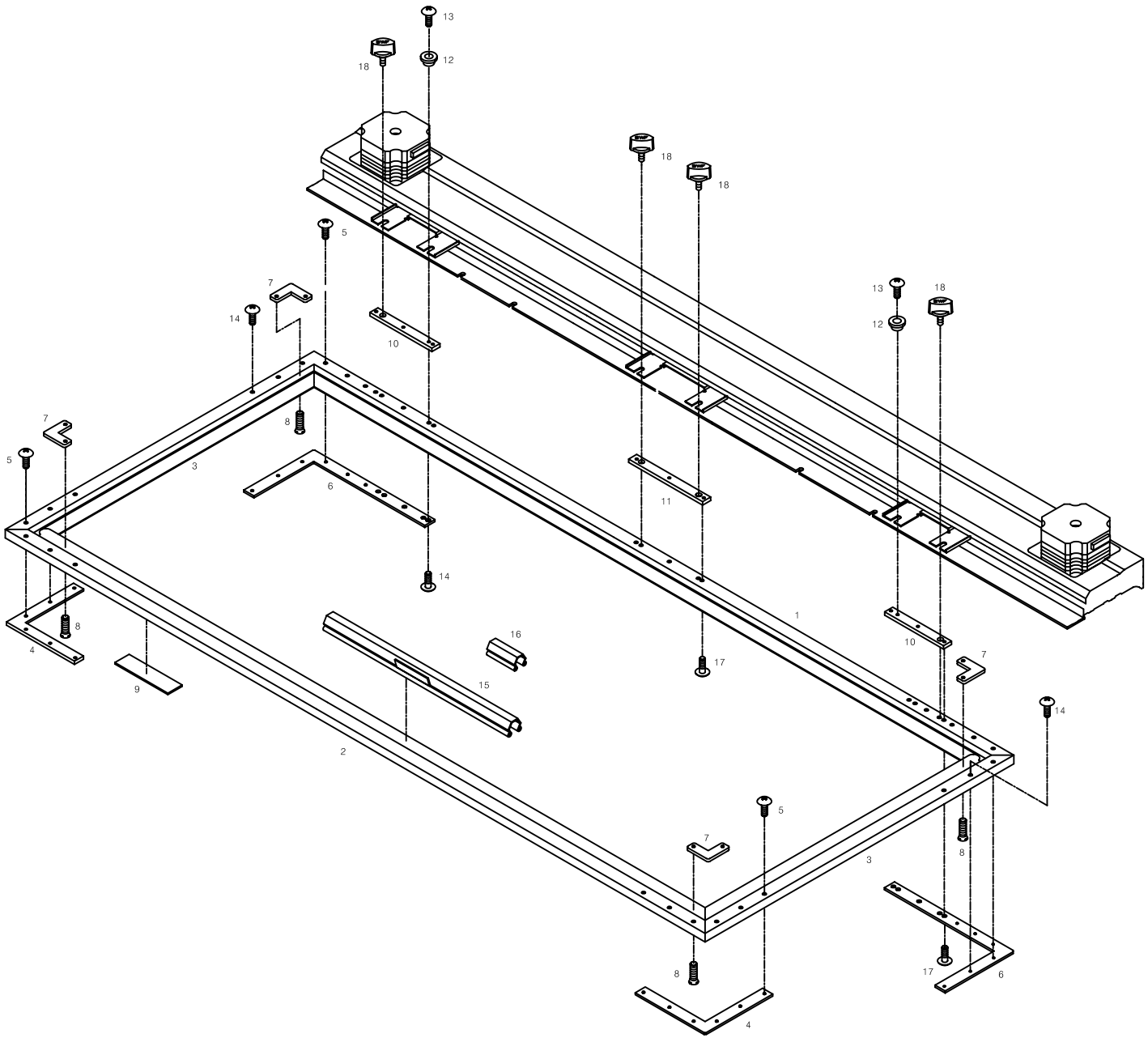

Ref. No	Part No.	Part Names	Q'ty
O1001	GP-004932-00	Square Frame (A)	2
O1002	GP-004933-00	Square Frame (B)	2
O1003	24007AD-UK01	Border Frame Sash L=575	4
O1004	24004PR-UK01	Connecting Plate "F"	4
O1005	02044SC-3123	Truss Screw (M5*L8)	48
O1006	24004PR-UK02	Connecting Plate "E"	4
O1007	24011PR-T121	Connecting Plate "C"	8
O1008	10010SC-8119	Plus Screw (M3*L5)	16
O1009	24016SF-T121	Felt	20
O1010	24008PR-UK02	Square Frame Fixiing Plate A	4
O1011	24011PR-UK02	Square Frame Fixiing Plate B	2
O1012	18025PM-UK01	Location Block	4
O1013	18153SC-3123	Plus Screw (M4*L10)	4
O1014	02010SC-3123	Truss Screw (M4*L8)	12
O1015	18084PR-A001	Embroidery Frame Clip L-300	4
	18085PR-A001	Embroidery Frame Clip L-250	4
	18085PR-T121	Embroidery Frame Clip L-220	8
O1016	18086PR-B001	Frame Clip Support	32
O1017	15042SC-3123	Truss Screw (M4*L6)	12
O1018	09000100U000	Tubular Frame Fixing Screw	8

Ref. No	Part No.	Part Names	Q'ty

02 Boder Frame (UH1506D)

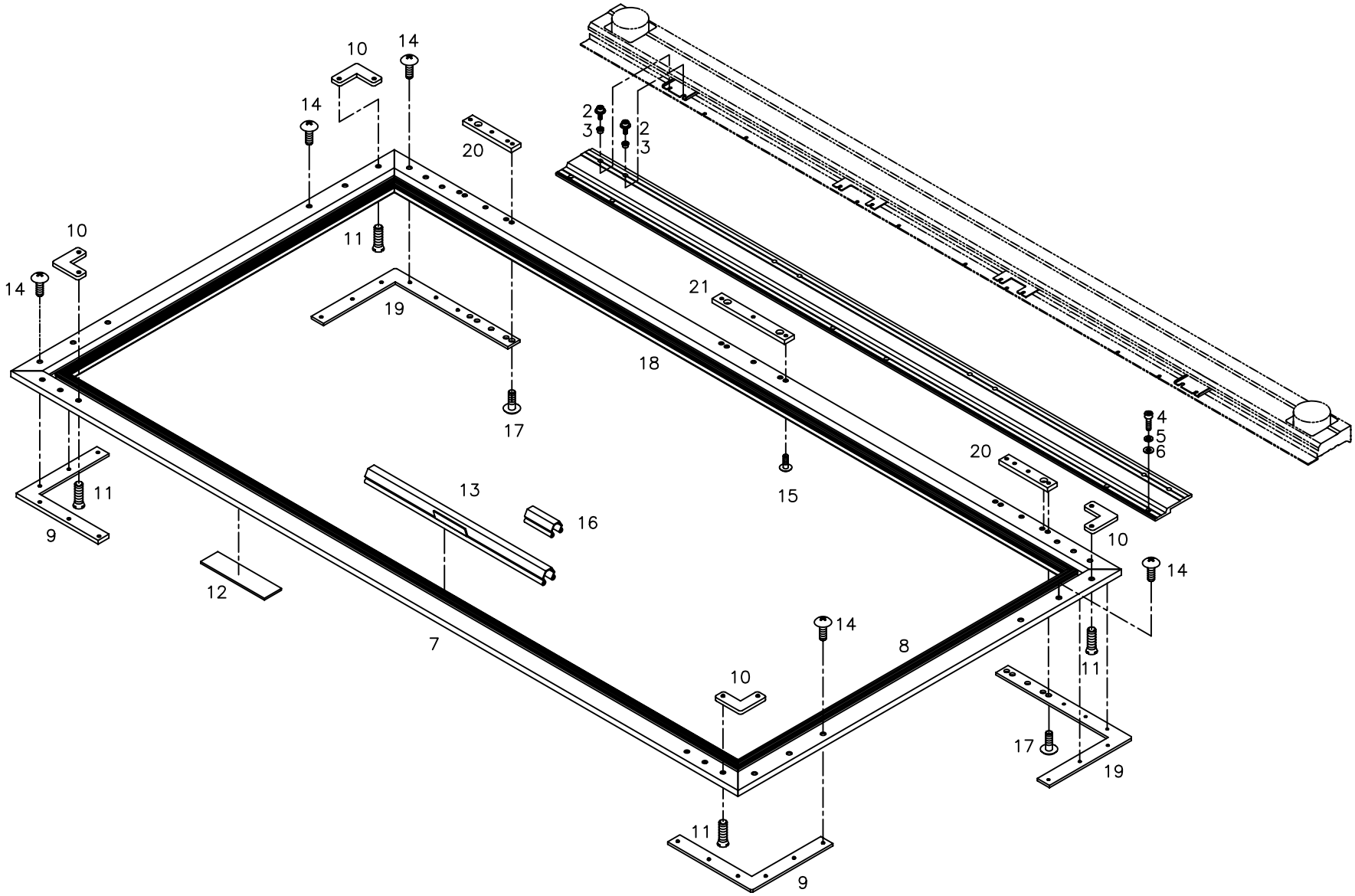

Ref.No	Part No.	PartNames	Q'ty
O2001	09600300UH60	Square Frame Connecting Plate	2
O2002	05012MC-7113	Cap Frame Fixed Screw	21
O2003	18070CW-A021	Insert Bushing	21
O2004	05008SC-4113	Hex.Socket Bolt (M4*L16)	90
O2005	18014SW-3115	Spring Washer (@4-No2)	90
O2006	18015SW-3111	Washer (4@)	90
O2007	GP-008802-00	Front Border Frame Sash L=1344	2
O2008	24007AD-UK01	Border Frame Sash L=575	4
O2009	24004PR-UK01	Connecting Plate "F"	4
O2010	24011PR-T121	Connecting Plate "C"	8
O2011	10010SC-8119	Plus Screw (M3*L5)	16
O2012	24016SF-T121	Felt	19
O2013	18084PR-A001	Embroidery Frame Clip L=300	12
	18085PR-A001	Embroidery Frame Clip L=250	8
	18085PR-T121	Embroidery Frame Clip L=220	8
O2014	02044SC-3123	Truss Screw (M5*L8)	24
O2015	15042SC-3123	Truss Screw (M4*L6)	3
O2016	18086PR-B001	Frame Clip Support	36
O2017	02010SC-3123	Truss Screw (M4*L8)	6
O2018	GP-008801-00	Rear Border Frame Sash L=1344	2
O2019	24004PR-UK02	Connecting Plate "E"	4
O2020	24008PR-UK02	Square Frame Fixiing Plate A	4
O2021	24011PR-UK02	Square Frame Fixiing Plate B	2

Ref. No	Part No.	Part Names	Q'ty

O3 Boder Frame (UH1208D)

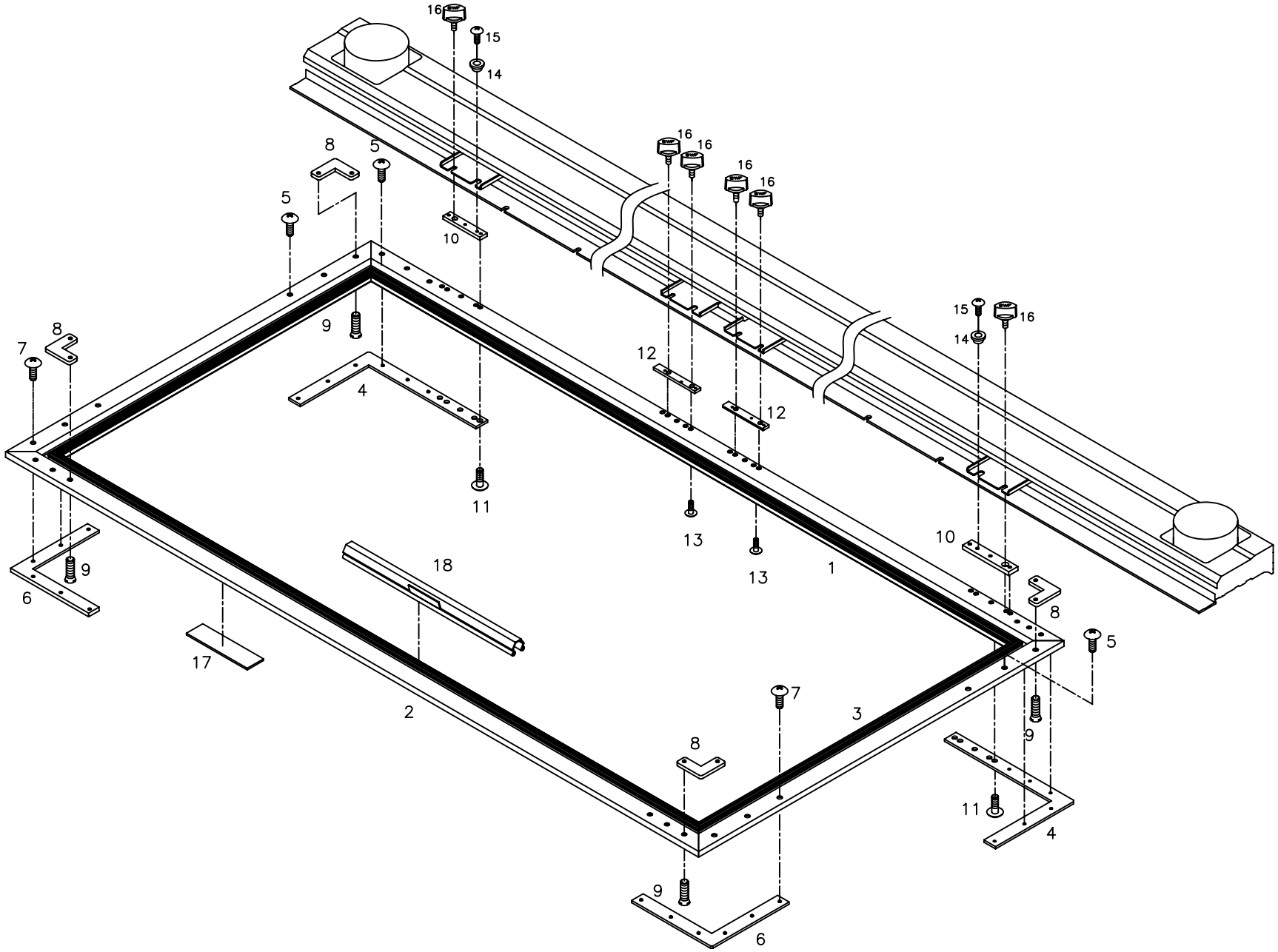

Ref. No	Part No.	Part Names	Q'ty
O3001	GP-004174-00	Front Border Frame Sash L=1744	2
O3002	GP-004175-00	Rear Border Frame Sash L=1744	2
O3003	24007AD-UK01	Border Frame Sash L=575	4
O3004	08300300UH00	Connecting Plate "E"	4
O3005	02044SC-3123	Truss Screw (M5*L8)	24
O3006	24004PR-UK01	Connecting Plate "F"	4
O3007	02044SC-3123	Truss Screw (M5*L8)	24
O3008	24011PR-T121	Connecting Plate "C"	8
O3009	10010SC-8119	Plus Screw (M3*L5)	16
O3010	24008PR-UK02	Square Frame Fixiing Plate A	4
O3011	15042SC-3123	Truss Screw (M4*L6)	12
O3012	24011PR-UK02	Square Frame Fixiing Plate B	8
O3013	15042SC-3123	Truss Screw (M4*L6)	24
O3014	18025PM-UK01	Location Block	4
O3015	18153SC-3123	Plus Screw (M4*L10)	4
O3016	22010PM-UK01	Tubular Frame Fixing Screw	12
O3017	24016SF-T121	Felt	19
O3018	18084PR-A001	Embroidery Frame Clip L=300	18
	18085PR-A001	Embroidery Frame Clip L=250	6
	18085PR-T121	Embroidery Frame Clip L=220	2

Ref. No	Part No.	Part Names	Q'ty

04 Border Frame (UH1512D)

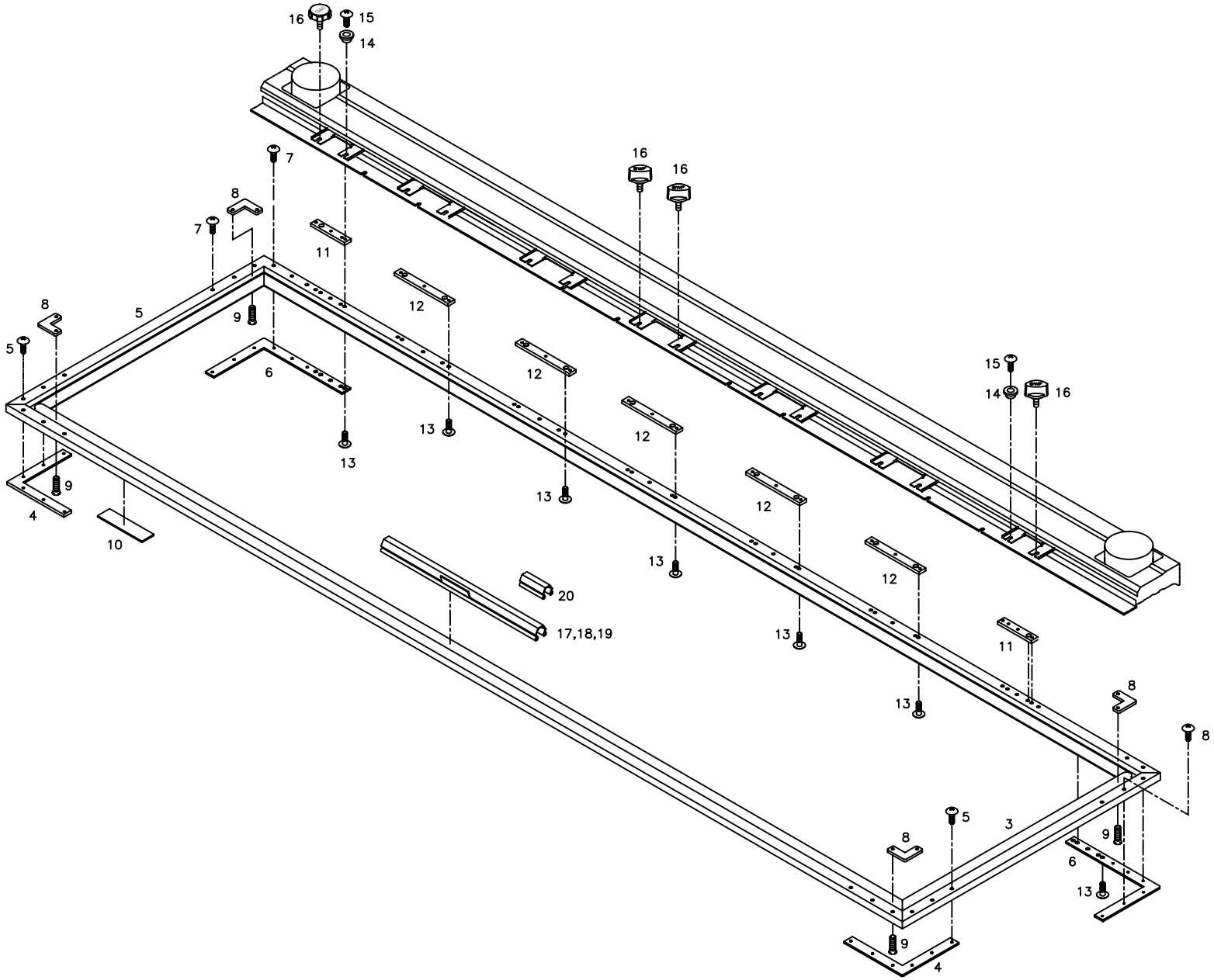

Ref. No	Part No.	Part Names	Q'ty
O4001	08300100UH00	Square Frame "A" L=2544	2
O4002	08300200UH00	Square Frame "B" L=2544	2
O4003	24007AD-UK01	Border Frame Sash L=575	4
O4004	24004PR-UK01	Connecting Plate "F"	4
O4005	02044SC-3123	Truss Screw (M5*L8)	24
O4006	08300300UH00	Connect Plate (E)	4
O4007	02044SC-3123	Truss Screw (M5*L8)	24
O4008	24011PR-T121	Connecting Plate "C"	8
O4009	10010SC-8119	Plus Screw (M3*L5)	16
O4010	24016SF-T121	Felt	38
O4011	24008PR-UK02	Square Frame Fixiing Plate A	4
O4012	24011PR-UK02	Square Frame Fixiing Plate B	8
O4013	15042SC-3123	Truss Screw (M4*L6)	36
O4014	18025PM-UK01	Location Block	4
O4015	18153SC-3123	Plus Screw (M4*L10)	4
O4016	09000100U000	Tubular Frame Fixing Screw	16
O4017	18084PR-A001	Embroidery Frame Clip L-300	32
O4018	18085PR-A001	Embroidery Frame Clip L-250	4
O4019	18085PR-T121	Embroidery Frame Clip L-220	4
O4020	18086PR-B001	Frame Clip Support	72

Ref. No	Part No.	Part Names	Q'ty

P

S/B Switch Unit

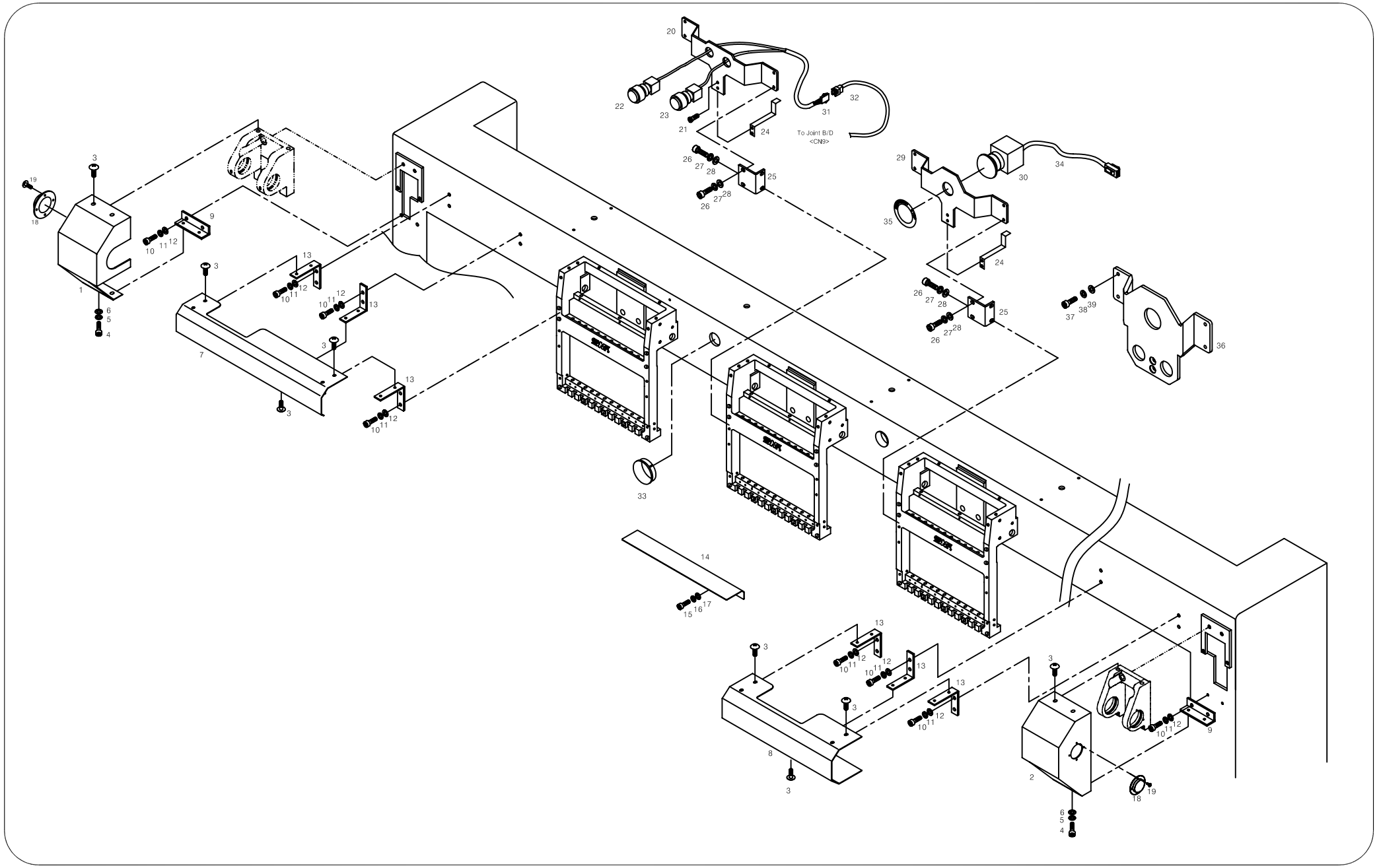

Ref.No	Part No.	Part Names		Q'ty
P-001	01000100UH80	TOP SHAFT PULLEY COVER		1
P-002	01001800UH60	UPPER SHAFT PULLEY COVER (R)		1
P-003	15042SC-3123	TRUSS SCREW (M4*L6)		16
P-004	02023SC-7113	HEX.SOCKET BOLT (M4*L8)		4
P-005	18014SW-3115	SPRING WASHER (@4-NO2)		4
P-006	18015SW-3111	WASHER (4@)		4
P-007	GP-005007-00	TOP SHAFT COVER B-1	UH1504D	1
	GP-014513-00	TOP SHAFT COVER B-1	UH1506D	
	09000503UH60	TOP SHAFT COVER B-1	UH1208D	
	09000503UH60	TOP SHAFT COVER B-1	UH1512D	
P-008	GP-005008-01	TOP SHAFT COVER B-2	UH1504D	1
	GP-005649-01	TOP SHAFT COVER B-2	UH1506D	
	09000603UH60	TOP SHAFT COVER B-2	UH1208D	
	GP-005062-01	TOP SHAFT COVER B-2	UH1512D	
P-009	02031PR-UK02	PULLEY COVER BRACKET		2
P-010	02031SC-7113	HEX. SOCKET SCREW(M5*L10)		16
P-011	18048SW-3115	SPRING WASHER (@5)		16
P-012	16018SW-1111	WASHER (@5)		16
P-013	02025PR-UK02	TOP SHAFT COVER BRACKET		6
P-014	09000415UH00	SURFACE COVER L287		2
P-015	02015SC-7113	HEX.SOCKET BOLT(M4*L10)		4
P-016	02028SW-9115	SPRING WASHER (@4)		4
P-017	05009SW-1111	WASHER (@4-L)		4
P-018	01001100UK00	TOP SHAFT PULLEY COVER B		2
P-019	09005SC-3123	TRUSS SCREW (M3*L6)		8
P-020	04000105UH00	S/B SWITCH BASE		2
P-021	15089SC-7119	C.S SCREW (M4*L10)		3
P-022	02027EL-UK01	S/B SWITCH SET		2
P-023	02026EL-UK01	START SWITCH SET		2
P-024	02062PR-UI12	CABLE HOLDER		5
P-025	04000104UK00	SWITCH BASE HOLDER	UH1204D	4
	04000204UK00	SWITCH BASE HOLDER	UH906D	8
	04000104UK00	SWITCH BASE HOLDER	UH1206D	8
	04000104UK00	SWITCH BASE HOLDER	UH1208D	12
	04000204UK00	SWITCH BASE HOLDER	UH912D	20
P-026	14002SC-7113	HEX.SOCKET BOLT (M6*L15)		40
P-027	16014SW-4115	SPRING WASHER (@6)		40
P-028	08057SW-1111	WASHER (@6)		40
P-029	04000205UH00	EMERGENCY SWITCH BASE		2
P-030	02000800T000	EMERGENCY SWITCH SET		2

Ref. No	Part No.	Part Names		Q'ty
P-031	25032EL-UK01	START STOP SWITCH (4HT-32)		4
P-032	25031EL-UK01	TO JOINT B/D CABLE (4HT-31)		2
P-033	02017PM-A001	CABLE RING		4
P-034	02106400U000	EMEGUNCY S/W CABLE		2
P-035	02103ET-UK01	EMERGENCY SWITCH STICKER		2
P-036	GP-005027-00	Switch Base	UH1504D	2
P-037	15105SC-4113	HEX.SOCKET BOLT (M4*L15)		4
P-038	16014SW-4115	Spring Washer (@4)		4
P-039	08057SW-1111	Washer (@4)		4

Q1 Sub Control Unit & Lamp (UH1504D)

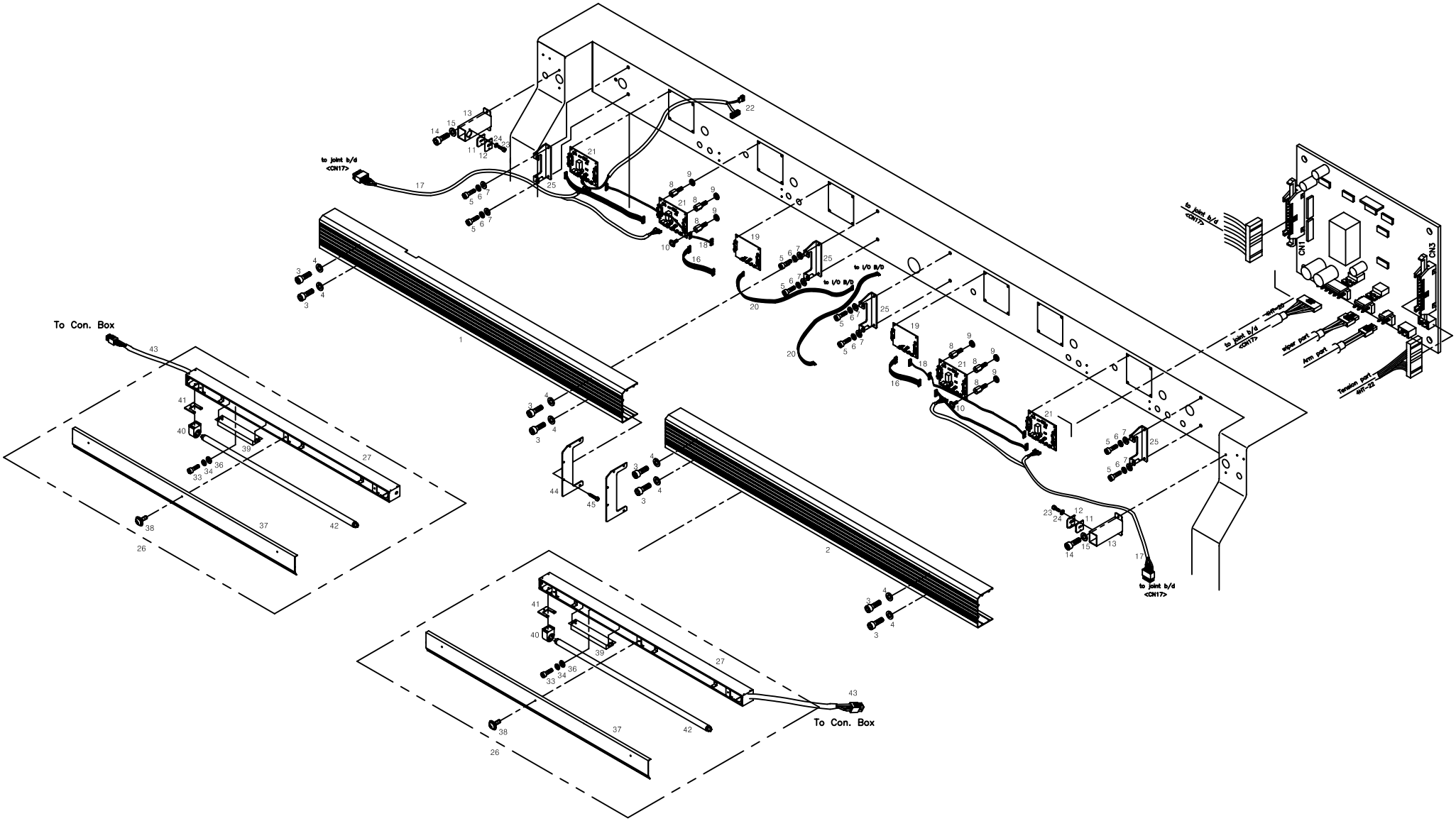

Ref.No	Part No.	Part Names	Q'ty
Q1001	GP-005009-01	Cable Cover A	1
Q1002	GP-005010-01	Cable Cover B	1
Q1003	02031SC-7113	Hex. Socket Screw(M5*L10)	8
Q1004	18049SW-3111	Washer (@5)	8
Q1005	08076SC-7113	Hex. Socket Bolt (M5*L12)	8
Q1006	18048SW-3115	Spring Washer (@5)	8
Q1007	16018SW-1111	Washer (@5)	8
Q1008	11049SC-A001	Board Stud Bolt	16
Q1009	18048SW-3115	Spring Washer (@5)	16
Q1010	18154SC-9134	PLUS SCREW (M3*L8)	16
Q1011	02054RB-UK01	Clamp Rubber	2
Q1012	02053PR-UK01	Cable Clamp	2
Q1013	01002600UH60	X-MOTOR CABLE HOLDER	2
Q1014	08076SC-7113	Hex. Socket Bolt(M5*L12)	4
Q1015	16018SW-1111	Washer (@5)	4
Q1016	02105700U040	Cable (Sh-57-2)	2
Q1017	02105610U040	Sh-56-2	2
Q1018	02106000U040	Cable (Sh-60-2)	2
Q1019	03-0000-HB11	Thread Control Joint Board	2
Q1020	02105900U000	Sh-59	2
Q1021	11093EL-C001	SUB-CONTROL BOARD NC-THS2.3	4
Q1022	25022EL-UK01	To Adjusting Plate (4Ht-22)	4
Q1023	18013AF-7113	Hex. Socket Bolt(M4*L10)	2
Q1024	18049SW-3111	Washer (@5)	2
Q1025	02000400B000	CABLE COVER HOLDER	4
Q1026	09300000B000	Lamp Set	2
Q1027	AS-002753-00	Lamp Ass-Y "A"	2
Q1033	14014SC-7113	Hex.Socket Set Screw(M5*L8)	12
Q1034	18048SW-3115	Spring Washer (@5)	12
Q1036	16018SW-1111	Washer (@5)	12
Q1037	20009PR-A001	Reflecting Cover	2
Q1038	20014SC-9124	Hex. Socket Screw(M4*L8)	6
Q1039	20016EL-A001	Ballast	2
Q1040	20014ET-A001	Lamp Socket	4
Q1041	20012PR-A001	Lamp Socket Fixed Plate	4
Q1042	GP-008907-00	LAMP (32W)	2
Q1043	02105000E040	Cable(Ce4Ht-50)	2
Q1044	GP-004865-00	CABLE COVER PLATE	2
Q1045	02065SC-3328	TAPPING SCREW(M3*L10)	10

Ref. No	Part No.	PartNames	Q'ty

Q2

Sub Control Unit & Lamp (UH1506D)

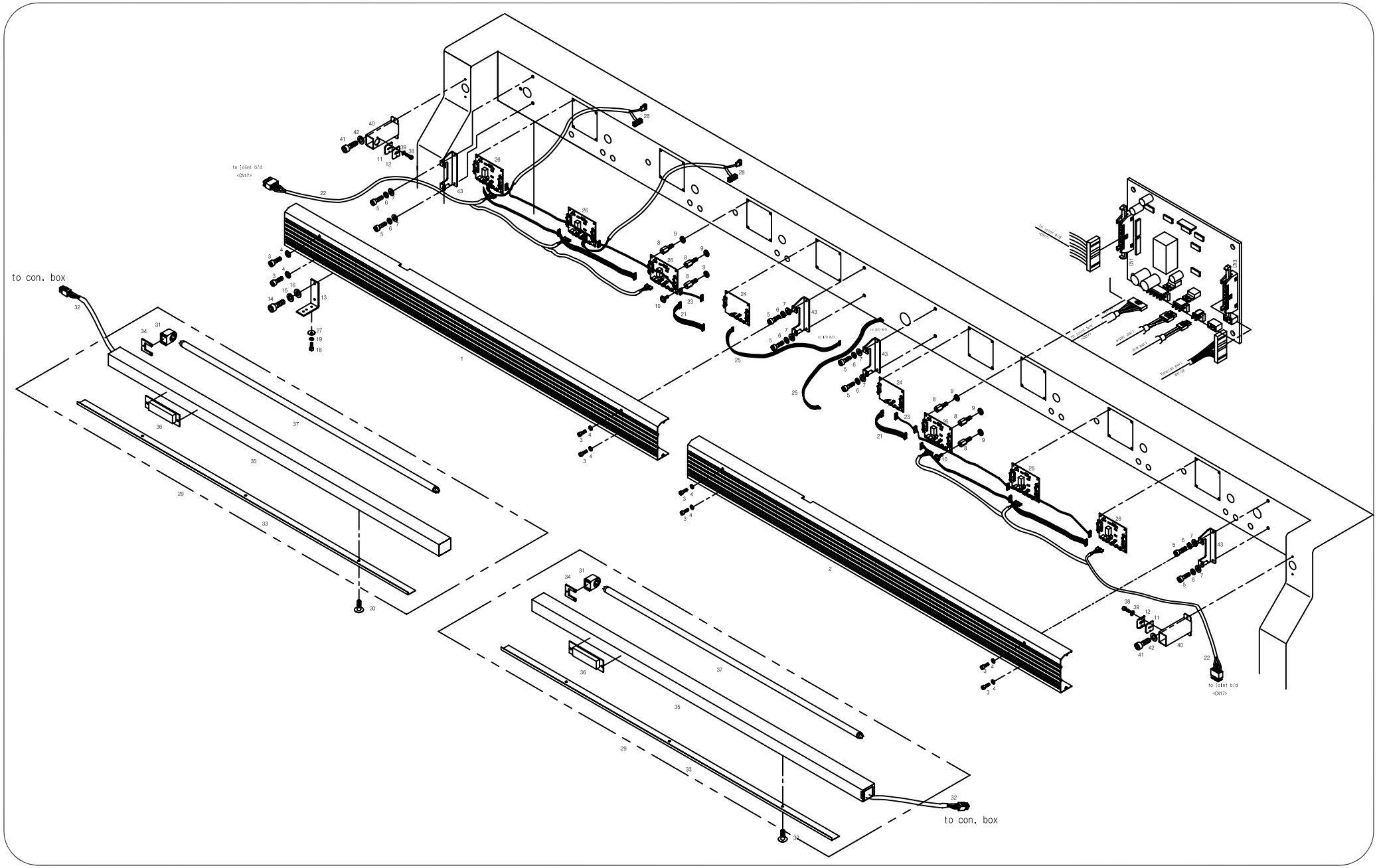

Ref.No	Part No.	Part Names	Q'ty
Q2001	GP-008788-00	Cable Cover A	1
Q2002	GP-008789-01	Cable Cover B	1
Q2003	02031SC-7113	Hex. Socket Screw(M5*L10)	4
Q2004	18049SW-3111	Washer (@5)	4
Q2005	08076SC-7113	Hex. Socket Bolt (M5*L12)	8
Q2006	18048SW-3115	Spring Washer (@5)	8
Q2007	16018SW-1111	Washer (@5)	8
Q2008	11049SC-A001	Board Stud Bolt	24
Q2009	18048SW-3115	Spring Washer (@5)	24
Q2010	18154SC-9134	PLUS SCREW (M3*L8)	24
Q2011	02054RB-UK01	Clamp Rubber	2
Q2012	02053PR-UK01	Cable Clamp	2
Q2013	11000110UH00	LAMP BRACKET	4
Q2014	08091SC-7113	Hex. Socket Bolt (M6*L20)	8
Q2015	16014SW-4115	Spring Washer (@6)	8
Q2016	08057SW-1111	Washer (@6)	8
Q2018	14014SC-7113	Hex.Socket Set Screw(M5*L8)	8
Q2019	18048SW-3115	Spring Washer (@5)	8
Q2021	02105700U040	Cable (Sh-57-2)	2
Q2022	02105610U040	Sh-56-2	2
Q2023	02106000U040	Cable (Sh-60-2)	2
Q2024	03-0000-HB11	Thread Control Joint Board	2
Q2025	02105900U000	Sh-59	2
Q2026	11093EL-C001	SUB-CONTROL BOARD NC-THS2.3	6
Q2027	20038PR-T121	WASHER (@8)	4
Q2028	25022EL-UK01	To Adjusting Plate (4Ht-22)	6
Q2029	20007BM-A001	Lamp Ass-Y "A"	2
Q2030	20014SC-9124	Hex. Socket Screw(M4*L8)	6
Q2031	20014ET-A001	Lamp Socket	4
Q2032	02105000E040	Cable	2
Q2033	32016PR-UH36	RECFLECTING COVER	2
Q2034	32004PR-UK01	Lamp Socket Fixed Plate	4
Q2035	32025PR-UK01	Lamp Structure B	2
Q2036	09000700U000	BALLAST	2
Q2037	20009EL-B001	LAMP (32W)	2
Q2038	18013AF-7113	Hex. Socket Bolt(M4*L10)	2
Q2039	18049SW-3111	Washer (@5)	2
Q2040	01002600UH60	X-MOTOR CABLE HOLDER	2
Q2041	08076SC-7113	Hex. Socket Bolt(M5*L12)	4
Q2042	16018SW-1111	Washer (@5)	4

Ref. No	Part No.	Part Names	Q'ty
Q2043	02000400B000	CABLE COVER HOLDER	4

Q3 Sub Control Unit & Lamp (UH1208D)

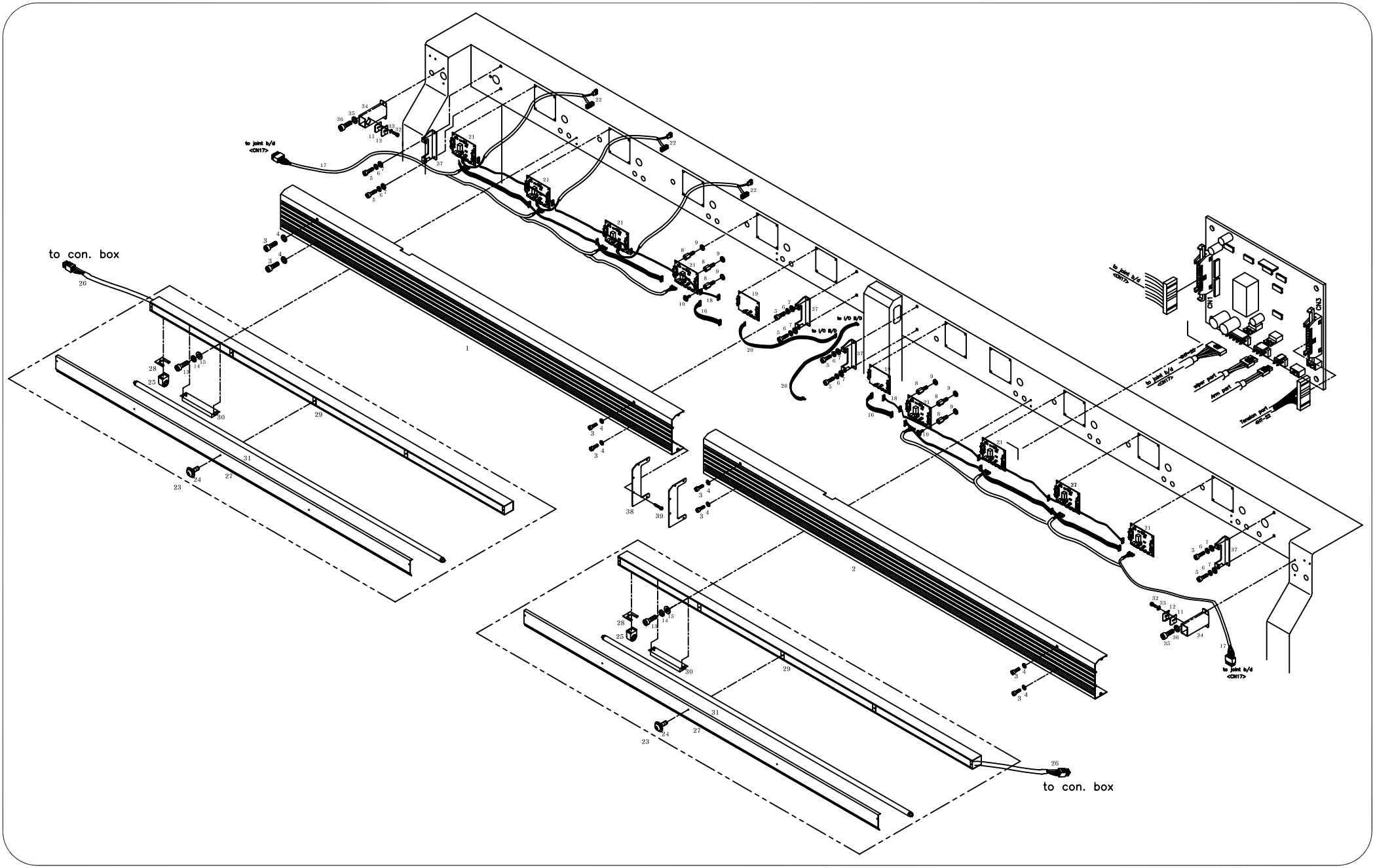

Ref. No	Part No.	Part Names	Q'ty
Q3001	GP-004140-00	Cable Cover A	1
Q3002	GP-004141-00	Cable Cover B	1
Q3003	02031SC-7113	Hex. Socket Screw(M5*L10)	8
Q3004	18049SW-3111	Washer (@5)	8
Q3005	08076SC-7113	Hex. Socket Bolt (M5*L12)	8
Q3006	18048SW-3115	Spring Washer (@5)	8
Q3007	16018SW-1111	Washer (@5)	8
Q3008	11049SC-A001	Board Stud Bolt	32
Q3009	18048SW-3115	Spring Washer (@5)	32
Q3010	18154SC-9134	PLUS SCREW (M3*L8)	32
Q3011	02054RB-UK01	Clamp Rubber	2
Q3012	02053PR-UK01	Cable Clamp	2
Q3013	14014SC-7113	Hex.Socket Set Screw(M5*L8)	8
Q3014	18048SW-3115	Spring Washer (@5)	8
Q3015	16018SW-1111	Washer (@5)	8
Q3016	02105700U040	Cable (Sh-57-2)	2
Q3017	02105610U040	Sh-56-2	2
Q3018	02106000U040	Cable (Sh-60-2)	2
Q3019	03-0000-HB11	Thread Control Joint Board	2
Q3020	02105900U000	Sh-59	2
Q3021	11093EL-C001	SUB-CONTROL BOARD NC-THS2.3	8
Q3022	25022EL-UK01	To Adjusting Plate (4Ht-22)	8
Q3023	20007BM-A001	Lamp Ass-Y "A"	2
Q3024	20014SC-9124	Hex. Socket Screw(M4*L8)	6
Q3025	20014ET-A001	Lamp Socket	4
Q3026	02105000E040	Cable	2
Q3027	32029PR-UK01	Reflecting Cover	2
Q3028	32004PR-UK01	Lamp Socket Fixed Plate	4
Q3029	32025PR-UK01	Lamp Structure B	2
Q3030	09000700U000	BALLAST	2
Q3031	20009EL-B001	LAMP (32W)	2
Q3032	18013AF-7113	Hex. Socket Bolt(M4*L10)	2
Q3033	18049SW-3111	Washer (@5)	2
Q3034	01002600UH60	X-MOTOR CABLE HOLDER	2
Q3035	08076SC-7113	Hex. Socket Bolt(M5*L12)	4
Q3036	16018SW-1111	Washer (@5)	4
Q3037	02000400B000	CABLE COVER HOLDER	4
Q3038	GP-004865-00	CABLE COVER PLATE	2
Q3039	02065SC-3328	TAPPING SCREW(M3*L10)	10

Ref. No	Part No.	Part Names	Q'ty

Q4 Sub Control Unit & Lamp (UH1512D)

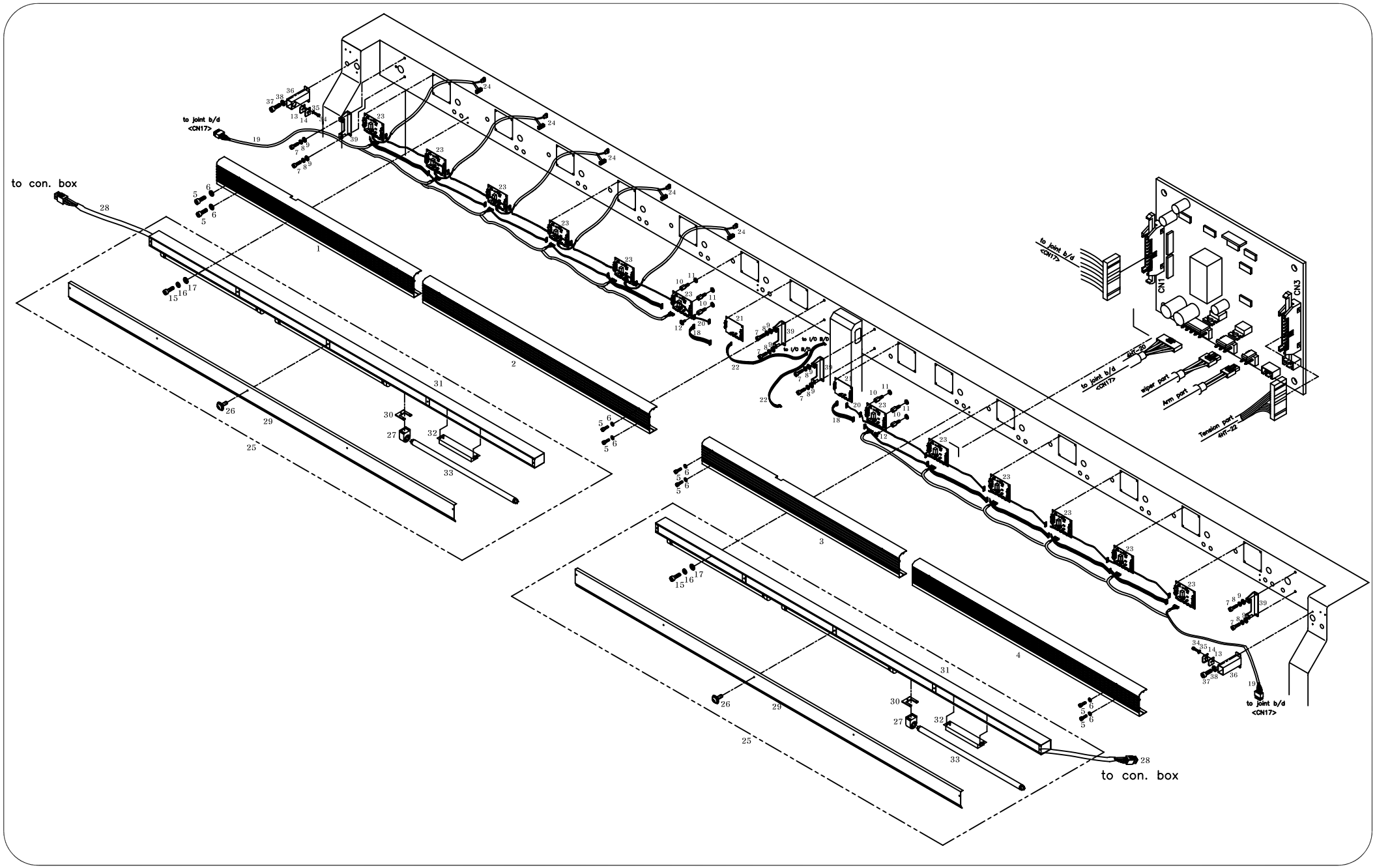

Ref. No	Part No.	Part Names	Q'ty
Q4001	GP-005066-00	Cable Cover A	1
Q4002	GP-005067-00	Cable Cover B	1
Q4003	GP-005068-00	Cable Cover C	1
Q4004	GP-005069-00	Cable Cover D	1
Q4005	02031SC-7113	Hex. Socket Screw(M5*L10)	16
Q4006	18049SW-3111	Washer (@5)	16
Q4007	08076SC-7113	Hex. Socket Bolt (M5*L12)	16
Q4008	18048SW-3115	Spring Washer (@5)	16
Q4009	16018SW-1111	Washer (@5)	16
Q4010	11049SC-A001	Board Stud Bolt	48
Q4011	18048SW-3115	Spring Washer (@5)	48
Q4012	18154SC-9134	PLUS SCREW (M3*L8)	48
Q4013	02054RB-UK01	Clamp Rubber	2
Q4014	02053PR-UK01	Cable Clamp	2
Q4015	14014SC-7113	Hex.Socket Set Screw(M5*L8)	8
Q4016	18048SW-3115	Spring Washer (@5)	8
Q4017	16018SW-1111	Washer (@5)	8
Q4018	02105700U040	Cable (Sh-57-2)	2
Q4019	02105610U040	Sh-56-2	2
Q4020	02106000U040	Cable (Sh-60-2)	2
Q4021	03-0000-HB11	Thread Control Joint Board	2
Q4022	02105900U000	Sh-59	2
Q4023	11093EL-C001	SUB-CONTROL BOARD NC-THS2.3	12
Q4024	25022EL-UK01	To Adjusting Plate (4Ht-22)	8
Q4025	32000BM-UK01	Lamp Set	2
Q4026	20014SC-9124	Hex. Socket Screw(M4*L8)	6
Q4027	20014ET-A001	Lamp Socket	4
Q4028	02105000E040	Cable	2
Q4029	32029PR-UK01	Reflecting Cover	2
Q4030	20012PR-A001	Lamp Socket Fixed Plate	4
Q4031	32025PR-UK01	Lamp Ass'y	2
Q4032	32008EL-UK01	BALLAST	2
Q4033	32020EL-UK01	LAMP (32W)	2
Q4034	18013AF-7113	Hex. Socket Bolt(M4*L10)	2
Q4035	18049SW-3111	Washer (@5)	2
Q4036	01002600UH60	X-MOTOR CABLE HOLDER	2
Q4037	08076SC-7113	Hex. Socket Bolt(M5*L12)	4
Q4038	16018SW-1111	Washer (@5)	4
Q4039	02000400B000	CABLE COVER HOLDER	8

Ref. No	Part No.	Part Names	Q'ty

R

Main Controller

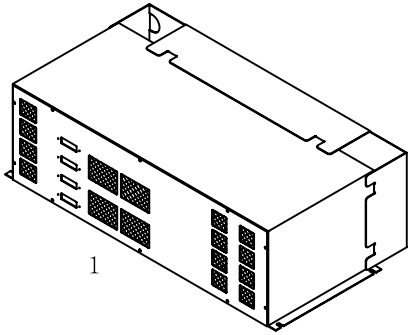
1

4,7,9,11,13,14,16,18
19,20,22,24,26,28,30
32,34,36,38,40,42,44
48

15

29

39

2

8

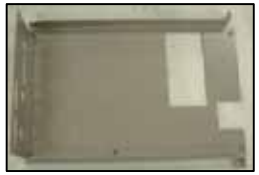
17

43

33

45,46

41

47

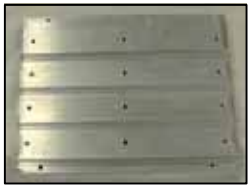
3

10

25

31

35

5

27

37

49

50

51

6

12

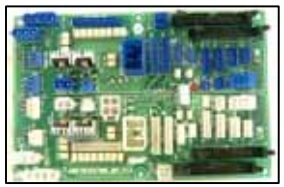
21

23

52

53

Ref.No	Part No.	PartNames		Q'ty
R-001	SWF-DU33-220	Control Box Assy		1
R-002	10-001A-DU33	Contorl Box		1
R-003	11-101A-DU33	Radiator (A)		1
R-004	10-003M-PT01	Screw for NO.3	(M4×L10)	4
R-005	05-002S-SW70	PCB Guide		8
R-006	11-0000-SD00	X-Y Drive Board (Assy)		4
R-007	10-003M-PT01	Screw for NO.6	(M4×L10)	12
R-008	10-003A-DU33	Side Cover		1
R-009	10-003M-PT01	Screw for NO.8	(M4×L10)	4
R-010	01-002A-AT01	FAN		1
R-011	01-002M-AU12	Screw for NO.10	(M4×L35)	4
R-012	12-0000-MD00	Main Board (Assy)		2
R-013	10-002S-SW66	Screw for NO.13	(M3×L8)	5
R-014	08-002M-SW67	Stud	(3-5-10)	5
R-015	01-007A-AT12	Radiator (B)		2
R-016	07-005S-SM5S	Screw for NO.15	(M3×L10)	8
R-017	12-001A-DU33	Bracket for M/B (Assy)		2
R-018	07-004S-SM5S	Screw for NO.17	(M4×L10)	4
R-019	07-004S-SM5S	Screw for IPM	(M4×L10)	4
R-020	01-003S-2070	Screw for diode	(M4×L16)	2
R-021	13-0000-DU33	Joint Board (A)		1
R-022	10-002S-SW66	Screw for NO.21	(M3×L8)	6
R-023	14-0000-DU33	Joint Board (B)		1
R-024	10-002S-SW66	Screw for NO.23	(M3×L8)	6
R-025	14-001A-DU33	Bracket for Joint Board (Assy)		1
R-026	07-004S-SM5S	Screw for NO.25	(M4×L10)	4
R-027	-	Condenser		4
R-028	07-004S-SM5S	Screw for NO.27	(M4×L10)	4
R-029	GP-007473-00	SMPS		1
R-030	07-004S-SM5S	Screw for NO.29	(M4×L10)	2
R-031	15-001A-DU33	Bracket for SMPS (A)		1
R-032	07-004S-SM5S	Screw for NO.31	(M4×L10)	4
R-033	01-005A-SQ40	SMPS (B)		2
R-034	01-001S-SQ40	Screw for NO.33	(M4×L6)	4
R-035	16-002A-DU33	Transformer		2
R-036	07-004S-SM5S	Screw for NO.35	(M4×L10)	8
R-037	16-001A-DU33	Bracket for Transformer		2
R-038	07-004S-SM5S	Screw for NO.37	(M4×L10)	8
R-039	10-002A-DU33	Front Cover		1
R-040	10-003M-PT01	Screw for NO.39	(M4×L8)	10

Ref. No	Part No.	Part Names		Q'ty
R-041	10-005A-DU33	Earth Plate		1
R-042	07-004S-SM5S	Screw for NO.41	(M4×L10)	2
R-043	10-004A-DU33	Cable Cover		1
R-044	07-004S-SM5S	Screw for NO.43	(M4×L8)	6
R-045	04-005A-AU12	Vibration Device Rubber (L)		1
R-046	04-006A-AU12	Vibration Device Rubber (R)		1
R-047	02-001B-SW67	Switch Cover		4
R-048	10-002S-SW66	Screw for NO.47	(M3×L8)	8
R-049	09-023C-SC53	QC Sticker		1
R-050	-	CE Sticker		1
R-051	04-003S-AU10	Warning Sticker (A)		1
R-052	04-004S-AU10	Warning Sticker (B)		1
R-053	10-021B-DU33	X-Y DRIVE STICKER		8

S

Main Controller Cable

Main Board

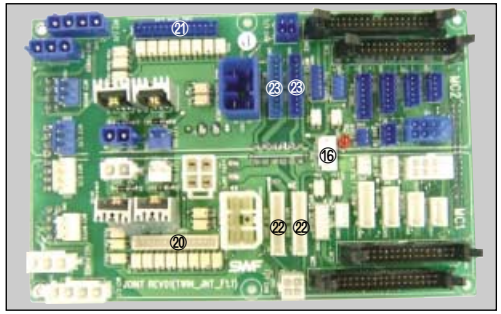

Joint Board (A)

Joint Board (B)

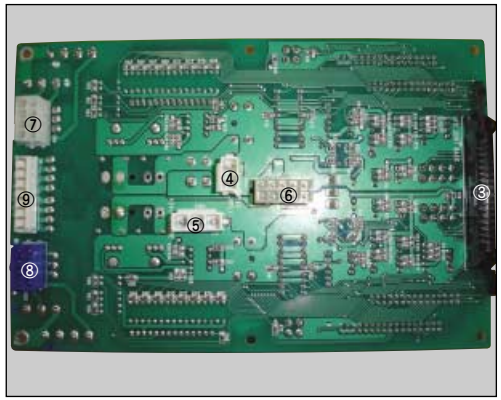

Joint Board (A)

SMPS(A)

SMPS(A)

SMPS(B)

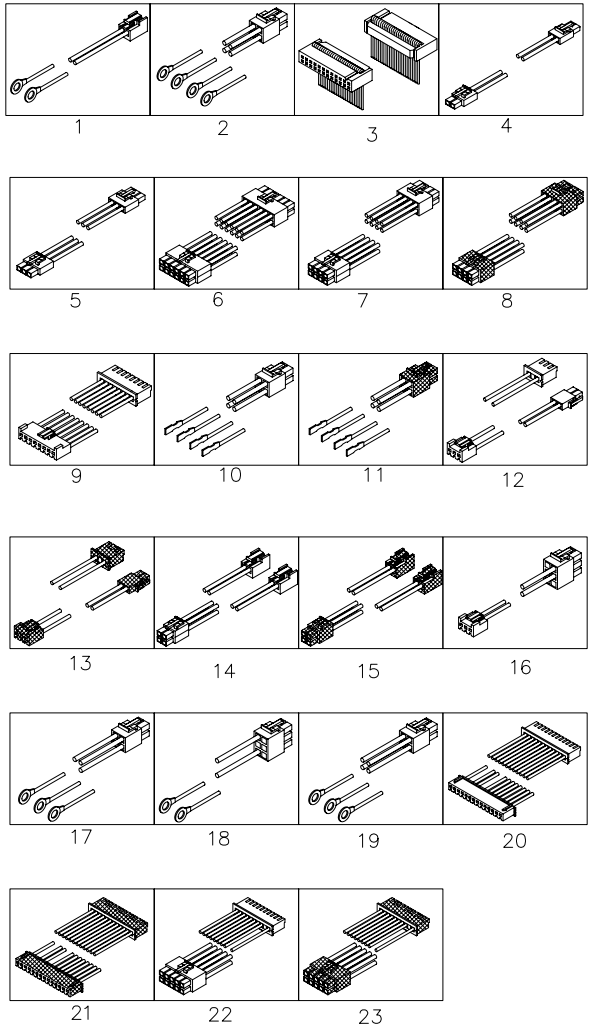

Ref. No	Part No.	Part Names	Q'ty
S-001	10-001B-DU33	To Fan Cable from +24V SMPS BOX	1
S-002	10-002B-DU33	Joint Board +24V From SMPS	1
S-003	10-003B-DU33	Joint_Back Board Connection 34P from Joint_Front Board	1
S-004	10-004B-DU33	Joint_Back Board +24V Supply from Joint_Front Board	1
S-005	10-005B-DU33	Joint_Back Board +24V Receive from Joint_Front Board	1
S-006	10-006B-DU33	Joint_Back Board Power Connection from Joint_Front Board	1
S-007	10-007B-DU33	[MC_LEFT] Wiper & C/C on Joint_Back from Joint_Front	1
S-008	10-007C-DU33	[MC_RIGHT] Wiper & C/C on Joint_Back from Joint_Front	1
S-009	10-008B-DU33	Joint_Back C/C Connection from Joint_Front	1
S-010	10-009B-DU33	Wiper Starting Condenser from Jiont_Back Board [White]	1
S-011	10-009C-DU33	Wiper Starting Condenser from Jiont_Back Board [Blue]	1
S-012	10-011B-DU33	[MC_LEFT] Lamp & Wiper Power from Joint_Back Board	1
S-013	10-011C-DU33	[MC_RIGHT] Lamp & Wiper Power from Joint_Back Board	1
S-014	10-012B-DU33	[MC_LEFT] Boost Transformer from Joint_Back Board	1
S-015	10-012C-DU33	[MC_RIGHT] Boost Transformer from Joint_Back Board	1
S-016	10-014B-DU33	Power on Joint Front Board from Digital SMPS	1
S-017	10-016B-DU33	Digital SMPS Box from AC Power	1
S-018	10-017B-DU33	Cable Inside Digital SMPS Box	1
S-019	10-018B-DU33	AC Cable Inside Digital SMPS	1
S-020	10-019B-DU33	Main Motor Signal Cable (Main Driver from Joint Board) (300-White)	1
S-021	10-019C-DU33	Main Motor Signal Cable (Main Driver from Joint Board) (300-Blue)	1
S-022	10-020B-DU33	X-Y Driver Digital Power & Signal from Joint Board (600-White)	2
S-023	10-020C-DU33	X-Y Driver Digital Power & Signal from Joint Board (600-Blue)	2
S-024	TTS-12-01	I/O Board to Joint Front Board (Left)	1
S-025	TTS-12-02	I/O Board to Joint Front Board (Right)	1

Ref. No	Part No.	Part Names	Q'ty

T

Operation Unit

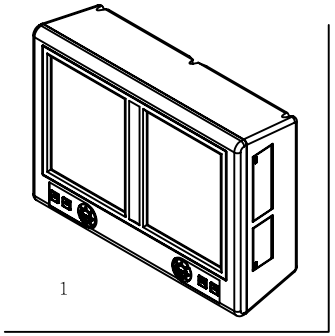
1

2

3

4

5

6

9

10

12

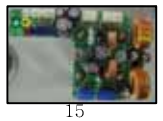
15

14

16

19

22

24

28

26

79

38

41

42

44

45

40

56

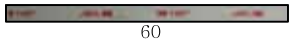
60

35

34

27

50

52

58

59

61

62

7,8,11,13,15,17,18,20,21
23,25,30,32,33,37,39,43
46,51,53,55,57,64,66,67
69,80

31

36

91

96

84,87
92

47

81,85
88,93

82,86
89,94

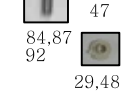
29,48

54

68

73

75

78

63

65

77

74

76

71

70

97

83

98

90

Ref.No	Part No.	PartNames		Q'ty
T-001	SWF-OB-DUAL	Operation Box (Set)		1
T-002	01-007A-DU33	Baseplate		1
T-003	20-006A-SW70	10.4 inch LCD		2
T-004	20-001B-SW70	Protection Sponge for LCD		2
T-005	01-012A-DU33	LCD Fixing Bracket A		2
T-006	01-013A-DU33	LCD Fixing Bracket B		2
T-007	20-001C-SW70	Screw Ass'y For LCD	(M2×L6)	8
T-008	10-072S-SW70	SCREW FOR FDD PROTECTOR	(M3×L12)	8
T-009	01-011A-DU33	LCD Pressing Plate		2
T-010	20-002B-SW70	LCD Pressing Plate Sponge		2
T-011	10-028S-SC53	Screw Ass'y For LCD Pressing Plate	(M3×L7)	4
T-012	22027EL-A001	LCD Inverter		2
T-013	10-072S-SW70	SCREW FOR FDD PROTECTOR	(M3×L12)	4
T-014	01-001R-DU33	LCD Cable Sponge		2
T-015	02-0000-DU33	DDC Board		1
T-016	02-101A-DU33	DDC Board Radiator		1
T-017	10-073S-SW70	Screw Ass'y For DDC Board Radiator	(M3×L12)	4
T-018	10-028S-SC53	Screw Ass'y For switching regulator	(M3×L7)	4
T-019	04-005A-SW64	CPU Fan		1
T-020	10-072S-SW70	Screw Ass'y For CPU Fan	(M3xL12)	4
T-021	10-042M-AU10	Screw Ass'y For DDC Board Radiator	(M4×L16)	2
T-022	01-016A-DU33	Speaker		2
T-023	10-028S-SC53	Screw For Speaker	(M3×L8)	4
T-024	08-0000-DU33	Connector Board		1
T-025	10-028S-SC53	Screw Ass'y For Connector Board	(M3×L7)	2
T-026	10-004A-AT10	FDD		1
T-027	01-019A-DU33	FDD Bracket		1
T-028	10-004M-PT01	INSULATOR PLATE FOR FDD		2
T-029	01-101B-OT10	OP Box insulation Bushing (B)		4
T-030	10-020M-SW66	Screw Ass'y For FDD	(M3xL12)	4
T-031	01-018A-DU33	FDD Support		1
T-032	10-002S-SW66	Screw Ass'y For FDD Support	(M3×L8)	4
T-033	10-028S-SC53	Screw Ass'y For FDD Bracket	(M3×L7)	4
T-034	01-009A-DU33	FDD Fixing Bracket		1
T-035	01-005A-BT01	Middle Fan		1
T-036	01-017C-DU33	Screw For Middle Fan	(M4×L25)	2
T-037	01-004S-2070	COVER SCREW SET		4
T-038	01-010A-DU33	FDD Front Bracket		1
T-039	10-028S-SC53	Screw Ass'y For FDD Front Bracket	(M3×L7)	3
T-040	09-0000-DU33	CPU Board		2

Ref. No	Part No.	Part Names		Q'ty
T-041	09-002A-DU33	CPU Board Bracket A		1
T-042	01-020A-DU33	CPU Board Insulated Plate A		1
T-043	10-020M-SW66	Screw Ass'y For CPU Board Bracket A	(M3xL12)	4
T-044	09-003A-DU33	CPU Board Bracket B		1
T-045	01-021A-DU33	CPU Board Insulated Plate B		1
T-046	10-020M-SW66	Screw Ass'y For CPU Board Bracket B	(M3xL12)	4
T-047	10-001C-AT10	BUSHING-C		20
T-048	01-102B-OT10	OP BOXINSULATOR BUSHING (B)		20
T-049	01-012B-DU33	STUD (A)	3-5-30	12
T-050	04-0000-DU33	I/O Board(R)		1
T-051	10-028S-SC53	Screw Ass'y For I/O Board(R)	(M3×L7)	6
T-052	03-0000-DU33	I/O Board(L)		1
T-053	10-028S-SC53	Screw Ass'y For I/O Board(L)	(M3×L7)	6
T-054	01-008A-DU33	Chassis		1
T-055	01-004S-2070	COVER SCREW SET		12
T-056	01-014A-DU33	OP Fixing Bracket A		1
T-057	07-004S-SM5S	Screw Ass'y For OP Fixing Bracket A	(M4×L10)	9
T-058	01-001A-DU33	Front Cover		1
T-059	09-001A-DU33	Touch Panel		2
T-060	-	Fixing Tape For Touch Panel		-
T-061	01-005A-DU33	Function Button A		1
T-062	01-006A-DU33	Function Button B		1
T-063	06-0000-DU33	Keyboard A		1
T-064	10-024M-SW66	NAIL FOR (3*6)		4
T-065	07-0000-DU33	Keyboard B		1
T-066	10-024M-SW66	NAIL FOR (3*6)		4
T-067	01-004S-2070	COVER SCREW SET		12
T-068	01-002A-DU33	Rear Cover		1
T-069	01-004S-2070	COVER SCREW SET		5
T-070	01-003A-DU33	FDD Cover		1
T-071	01-004A-DU33	Connector Cover		1
T-073	01-013C-DU33	M/C 1 Sticker - A		1
T-074	01-015C-DU33	M/C 1 Sticker - B		4
T-075	01-014C-DU33	M/C 2 Sticker - A		1
T-076	01-016C-DU33	M/C 2 Sticker - B		4
T-077	01-003B-SW63	Push Latch		2
T-078	01-012C-DU33	Wire Saddle	(DAWS-2NA)	10
T-079	09000500UH60	FIXING BRACKET B FOR OP		1
T-080	14002SC-7113	HEX.SOCKET BOLT (M6*L15)		4
T-081	03026SW-9115	Spring Washer For OP Fixing Bracket B	(Φ6)	4

T

Operation Unit

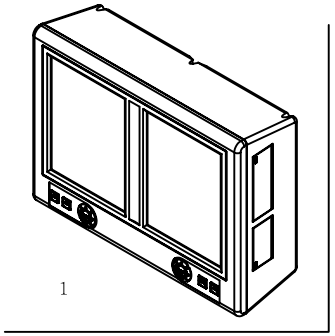
1

2

3

4

5

6

9

10

12

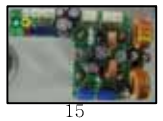
15

14

16

19

22

24

28

26

79

38

41

42

44

45

40

56

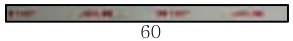
60

35

34

27

50

52

58

59

61

62

7,8,11,13,15,17,18,20,21
23,25,30,32,33,37,39,43
46,51,53,55,57,64,66,67
69,80

31

36

91

96

84,87
92

47

81,85
88,93

82,86
89,94

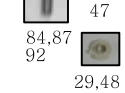
29,48

54

68

73

75

78

63

65

77

74

76

71

70

97

83

98

90

Ref.No	Part No.	PartNames		Q'ty
T-082	08057SW-1111	Washer For OP Fixing Bracket B	(Φ6)	4
T-083	09000400UH60	OP Box Holder		1
T-084	14006SC-7113	HEX.SOCKET SET SCREW(M8*L15)		2
T-085	15095SW-4115	Spring Washer	(Φ8)	2
T-086	15077SW-2111	Washer	(Φ8)	2
T-087	18047SC-7113	Screw	(M5×L15)	2
T-088	16019SW-4115	Spring Washer	(Φ5)	2
T-089	16018SW-1111	Washer	(Φ5)	2
T-090	09000300UH60	OP Box Support		1
T-091	14060AF-4517	Screw For OP Box Holder	(M6×L5)	2
T-092	08020MC-7113	Screw For OP Box Support	(M8×L20)	4
T-093	15095SW-4115	Spring Washer For OP Box Support	(Φ8)	4
T-094	15077SW-2111	Washer For OP Box Support	(Φ8)	4
T-096	02015SC-7113	Screw For OP Box Support Cable Cover	(M4×L10)	4
T-097	GP-008747-00	OP HOLD FILM A		1
T-098	GP-008748-00	OP HOLD FILM B		1

Ref. No	Part No.	Part Names	Q'ty

U Operation Unit Cable

I/O Board (L)

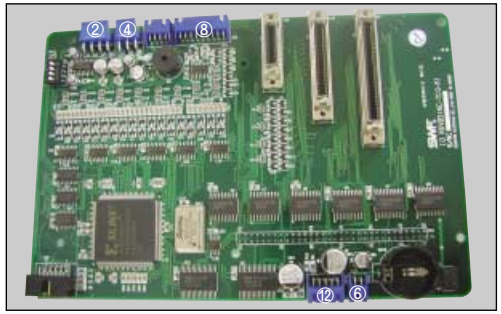

I/O Board (R)

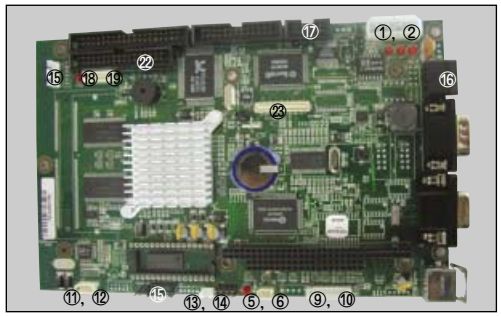

CPU Board

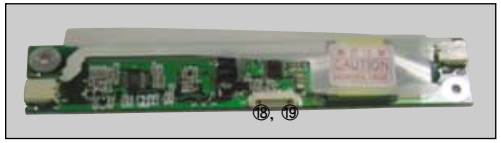

LCD Inverter

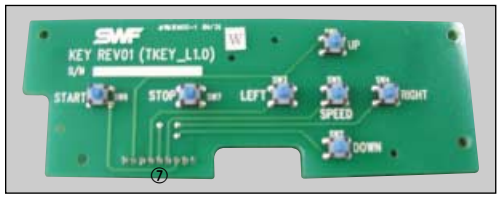

Key Board (A)

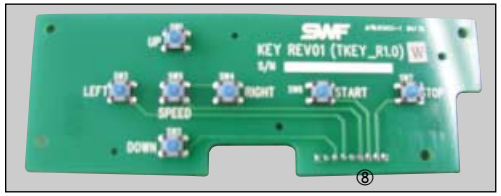

Key Board (B)

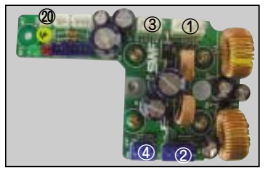

DDC Board

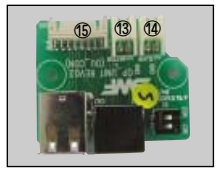

Connector Board

FDD

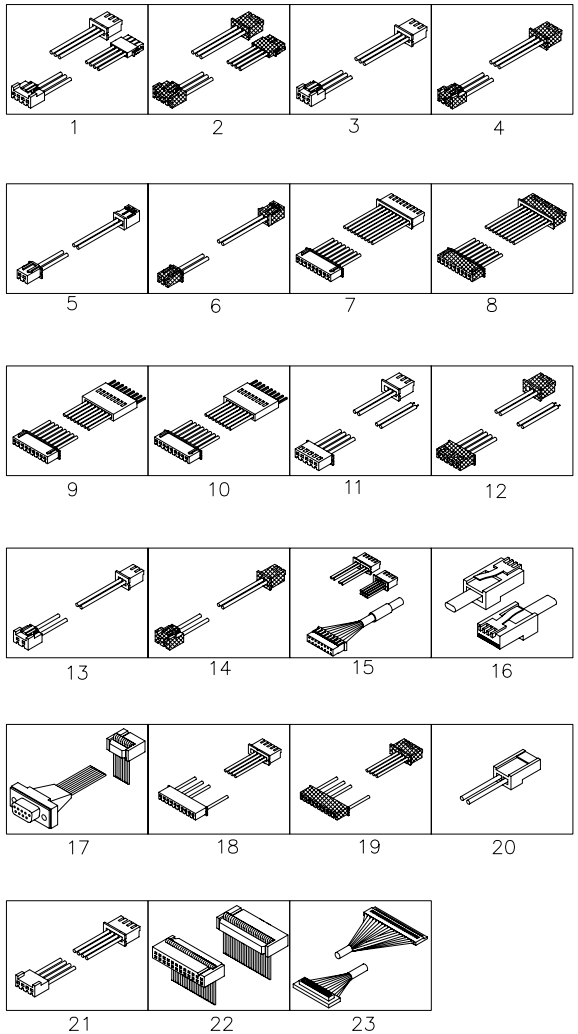

Ref. No	Part No.	Part Names	Q'ty
U-001	01-001B-DU33	MC1 I/O Board & CPU Board Power from DDC Board(White)	1
U-002	01-001C-DU33	MC2 I/O Board & CPU Board Power from DDC Board(Blue)	1
U-003	01-002B-DU33	DDC +24V Input from I/O Board(White)	1
U-004	01-002C-DU33	DDC +24V Input from I/O Board(Blue)	1
U-005	01-003B-DU33	Battery to CPU Board(White)	1
U-006	01-003C-DU33	Battery to CPU Board(Blue)	1
U-007	01-004B-DU33	Key Board from I/O Board(White)	1
U-008	01-004C-DU33	Key Board from I/O Board(Blue)	1
U-009	01-005B-DU33	MC1 Touch Panel Connection Cable	1
U-010	01-005C-DU33	MC2 Touch Panel Connection Cable	1
U-011	01-006B-DU33	AMP Input & Speaker Output from MC1 CPU Board(White)	1
U-012	01-006C-DU33	AMP Input & Speaker Output from MC2 CPU Board(Blue)	1
U-013	01-007B-DU33	Sub Connector Board to CPU1 Board Cable(White)	1
U-014	01-007C-DU33	Sub Connector Board to CPU1 Board Cable(Blue)	1
U-015	01-008B-DU33	Connector Board to MC1 CPU Board	1
U-016	01-009B-DU33	CPU1 Lan Port to CPU2 Lan Port	1
U-017	01-010B-DU33	CPU1 Board to Serial Port Output	1
U-018	01-011B-DU33	LCD Brightness Control Cable for MC1(White)	1
U-019	01-011C-DU33	LCD Brightness Control Cable for MC2(Blue)	1
U-020	01-012B-DU33	Connect to Middle Fan	1
U-021	01-013B-DU33	FDD Power to MC1 I/O Board	1
U-022	10-010A-5030	CABLE (5030-002)	1
U-023	09-004A-DU33	Dual LCD Cable	2
U-024	TTS-13-01	I/O Board to Thread Control J/B (Left)	1
U-025	TTS-13-02	I/O Board to Thread Control J/B (Right)	1

Ref. No	Part No.	Part Names	Q'ty

V

Bobbin Winder

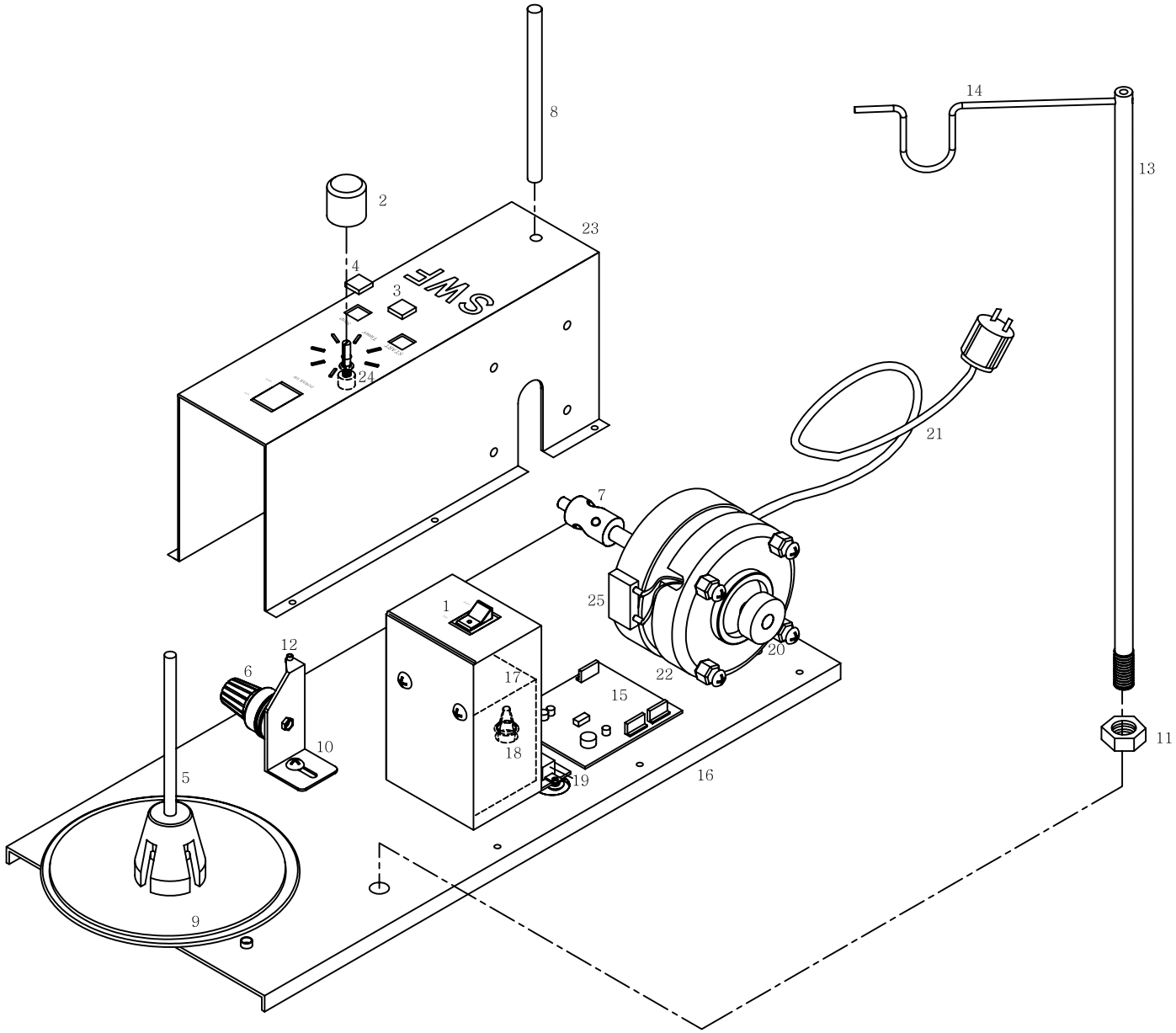

Ref.No	Part No.	Part Names	Q'ty
V-001	23001EL-B001	ON/OFF SWITCH	1
V-002	23002EL-B001	Timer	1
V-003	23003EL-B001	Start Switch	1
V-004	23004EL-B001	Stop Switch	1
V-005	23005BM-B001	Spool Post	1
V-006	23008BM-B001	Tension Adjusting Set	1
V-007	23009CW-B001	Bobbin Shaft	1
V-008	02026SC-A001	Bobbin Stand	1
V-009	23002BM-B001	Bobbin Winder	1
V-010	23019PR-B001	Tension Adjustment Holder	1
V-011	23043SN-B001	Antenna Bar Nut	1
V-012	23044CN-B001	Ceramic Ring	1
V-013	23007SH-B001	Antenna Bar	1
V-014	23006SH-B001	Antenna Bar Hanger	1
V-015	23010EL-B001	Control Board	1
V-016	23023ET-A001	Base	1
V-017	23014EL-B001	Transformer	1
V-018	23012EL-B001	Fuse Box	1
V-019	23025ET-B001	Transformation Switch	1
V-020	23005PU-A001	Aluminium Ring	1
V-021	23045ET-B001	AC Cord	1
V-022	23015MT-B001	Motor	1
V-023	230209R-A001	Cover	1
V-024	23027ET-B001	Variable Resistance	1
V-025	23028ET-B001	Condenser	1

Ref. No	Part No.	Part Names	Q'ty