PARTS BOOK

15-HEAD AUTOMATIC EMBROIDERY MACHINE (CYLINDER BRIDGE TYPE)

SWF®

PME-050530

SUNSTAR PRECISION CO., LTD.

Machine Layout

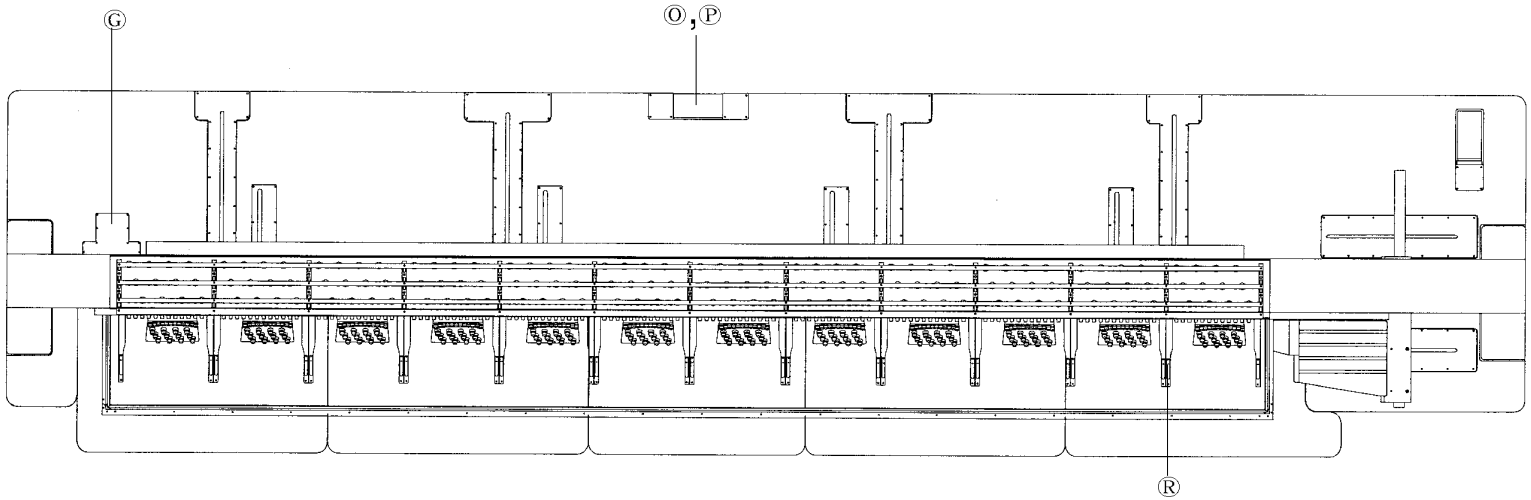

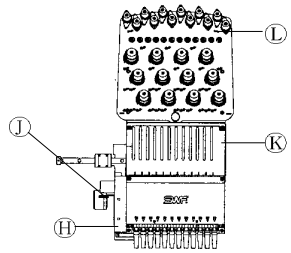

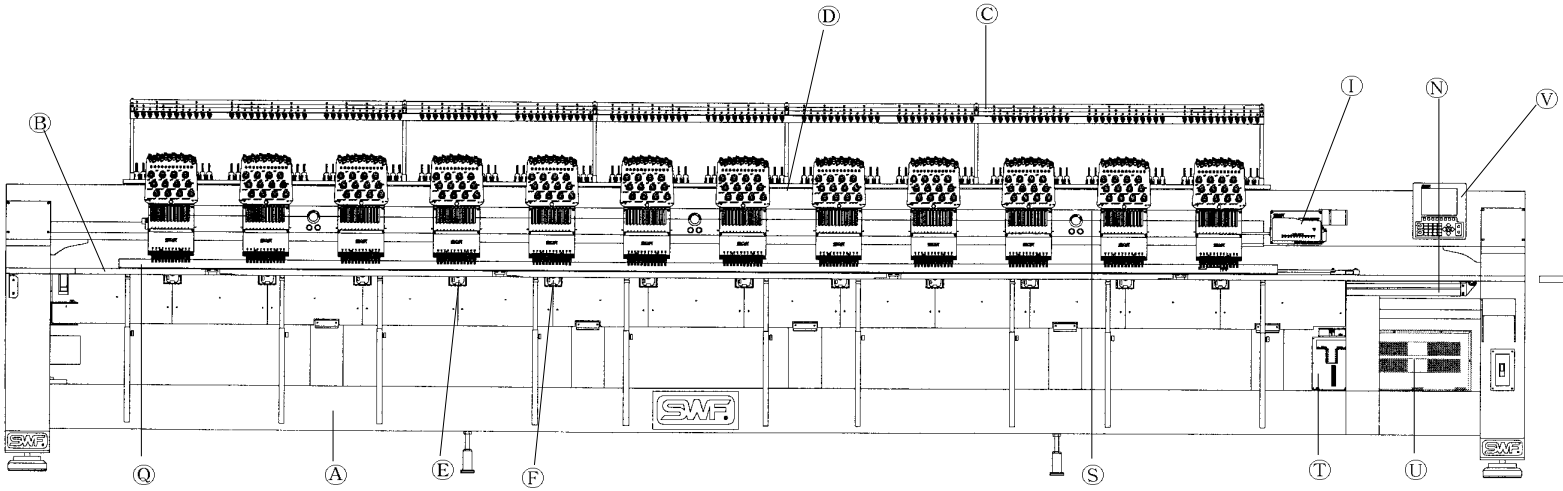

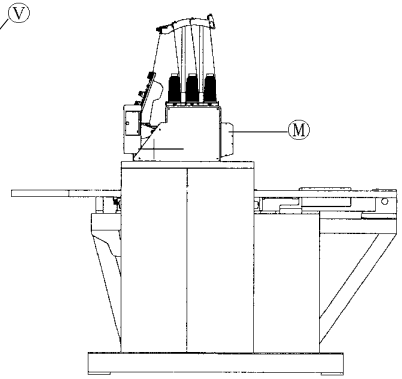

SWF®

CONTENT

A	Machine Body Ass' y	7
B	Work Table	9
C	Spool Stand	11
D	Main Drive System	13
E	Bed Ⅰ	17
F	Bed Ⅱ	19
G	Thread Cutting Drive System	21
H	Arm Ⅰ	23
H1	Arm Ⅱ	27
I	Color Change Set	29
J	Upper Thread Catcher Set	31
K	Head	35
L	Thread Tension Unit	39
M	Sub - Control	41
N	X - Axis Drive Set	43
O	Y - Axis Drive Set Ⅰ	45
P	Y - Axis Drive Set Ⅱ	49
Q	Frame	51
Q1	Border Frame (Option)	53
R	Tubular Frame	55
S	S/B Switch	57
T	X - Y Driver	59
U	Main Controller	61
V	Operation Box	63
W	Bobbin Winder	65
X	Lubrication	67

※ 본책자는 파트북으로 제작되었으므로 메뉴얼로 사용불가합니다.
(This is a parts book. It cannot be used as a manual.)

A

Machine Body Ass'y

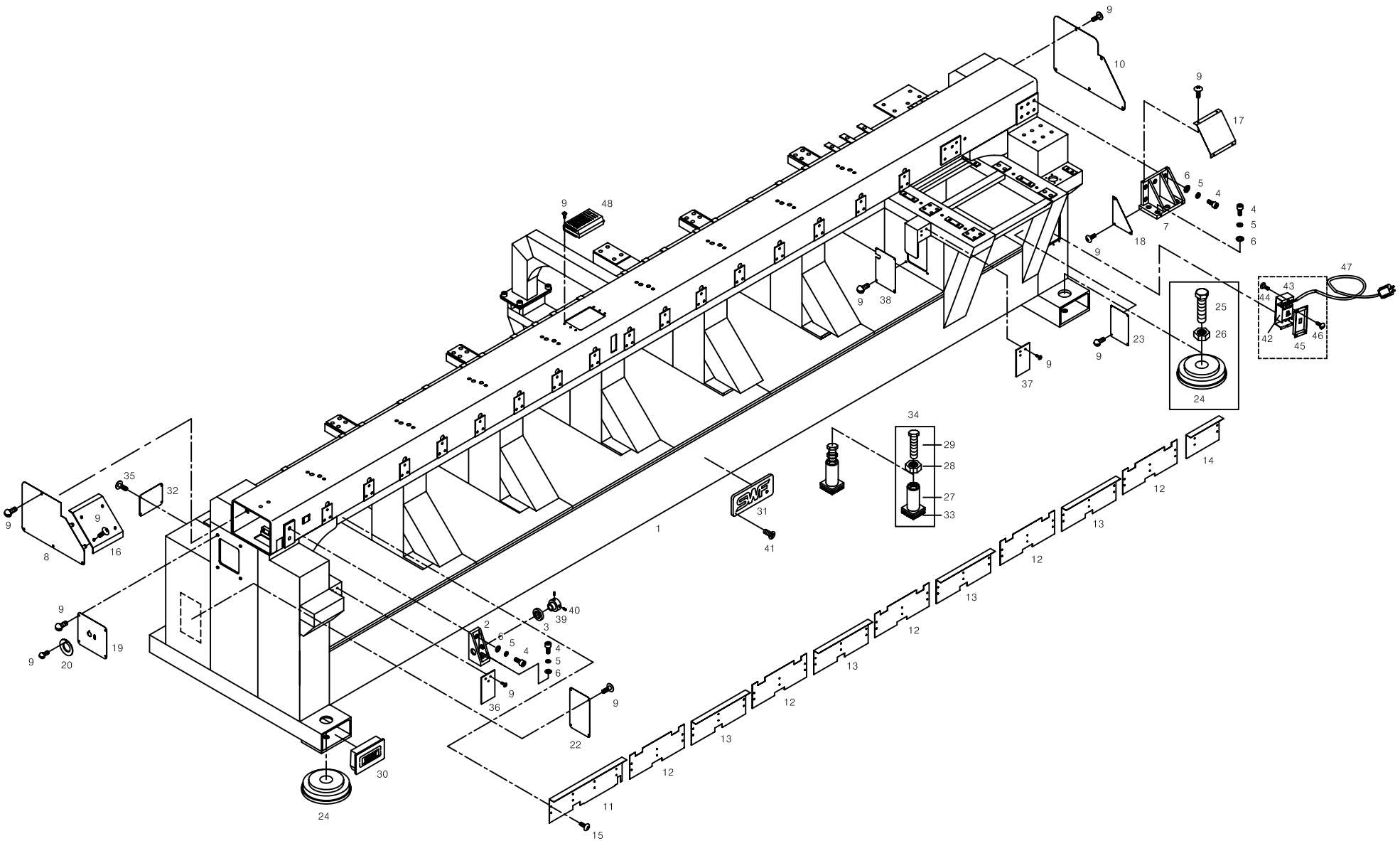

Ref.No	Part No.	Part Names	Q'ty
A-001	01000105UHF1	Beam and Body(Ass'y)	1
	01000104UIC1	Beam and Body(Ass'y) (UI1212)	
A-002	01000310H000	Beam Front Bracket(L)	1
A-003	01001100H000	Ball Bearing (6005Zz)	1
A-004	01006SC-4113	Hex.Socket Bolt(M10*L50)	16
A-005	01008SW-9115	Spring Washer(@10)	16
A-006	01007SW-1111	Washer (10@)	16
A-007	01000200B000	Beam Front Bracket (R)	1
A-008	12000400UHF0	Beam Cover (L) Uh1515	1
A-009	02044SC-3123	Truss Screw (M5*L8)	28
A-010	02055PR-A001	Beam Cover(R)	1
A-011	12000700UHF0	Body Front Cover (A) (UH1515)	1
A-012	12000800UHF0	Body Front Cover (B) (UH1515)	5
A-013	12000900UHF0	Body Front Cover (C) (UH1515)	4
A-014	12001000UHF0	Body Front Cover (D) (UH1515)	1
A-015	02044SC-3123	Truss Screw (M5*L8)	66
A-016	12100500H000	Front Bracket(L) Cover	1
A-017	02043PR-UI12	Beam Bracket Cover (R)	1
A-018	12100700B000	Beam Bracket Side Cover	1
A-019	12000300UHF0	Body Side Cover (A)	1
A-020	02054PR-A001	Main Motor Pulley Cover	1
A-022	12000500UHF0	Body Cover (L) Uh1515	1
A-023	12000600UHF0	Body Cover (R) (UH1515)	1
	12000600UHF0	Body Cover (R) (UI1212)	
A-024	02033CW-A001	Leveling Base Ass'Y	4
A-025	02035SC-A001	Hex. Bolt (M20*L90)	4
A-026	02036SN-1211	Hex. Nut (M20-No2)	4
A-027	02322CW-A001	Body Support Stand Pipe (1")	4
A-028	02321SN-A001	Hex. Nut (M16)	4
A-029	02326SC-UI12	Hex. Bolt (M16*L120)	4
A-030	12000100H000	Rubber For Body Support	4
A-031	02001DC-A001	Brand Marke	1
A-032	02097ET-B001	Model Name Plate	1
A-033	02324RB-A001	Body Support Stand Rubber	4
A-034	02032BM-UI12	Body Support Stand Ass'Y	4
A-035	02010SC-3123	Truss Screw (M4*L8)	4
A-036	12001100UHF0	Cover (A) Uh1515	1
A-037	12001200UHF0	Cover (B) Uh1515	1
A-038	02031PR-UI12	Body Inside Cover	1
A-039	03005210H000	Collar "A"	1
A-040	14060SC-4517	Hex.Socket Set Screw (M6*L6)	2

Ref. No	Part No.	Part Names	Q'ty
A-041	02002SC-7119	Pluss Screw (M4*L8)	4
A-042	24029ET-A001	Main Power S/W (Abe53B-30A)	1
A-043	02037PR-A001	Main Power S/W Bracket	1
A-044	02038SC-9131	Plus Screw (M5*L10)	2
A-045	02043PR-A001	Main Power S/W Cover	1
A-046	02044SC-3123	Truss Screw (M5*L8)	4
A-047	25001EL-A001	3@ Main Cable(25-1)	1
A-048	03006300H000	MAIN MOTOR COVER	1

B

Work Table

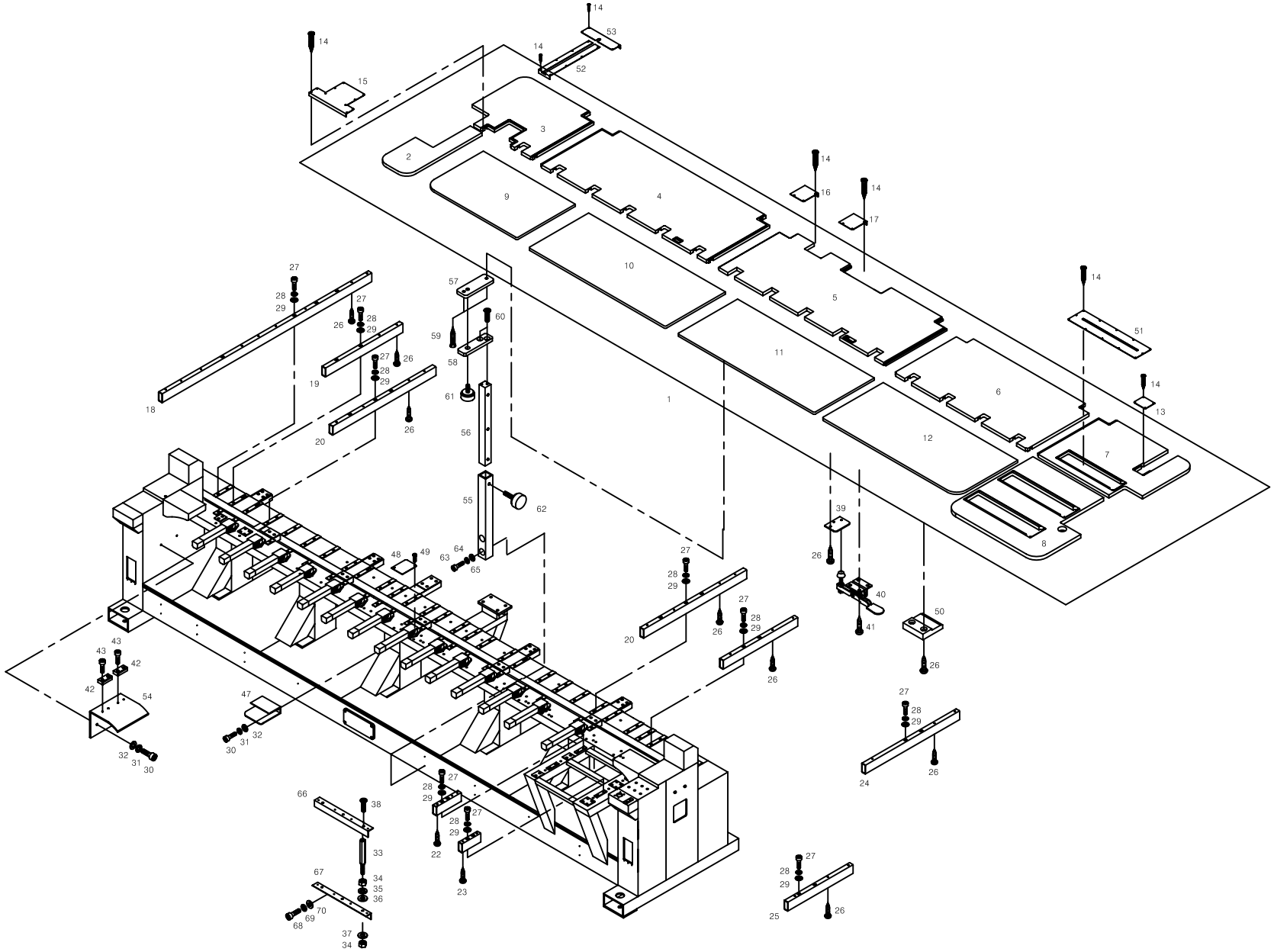
14
53
14
52
14
15
3
2
14
16
14
17
9
4
10
5
14
51
27
28
29
57
27
28
29
26
60
59
58
27
28
29
26
19
61
1
14
13
18
20
26
56
6
12
7
55
62
39
8
48
49
64
63
65
27
28
29
26
40
27
28
29
41
50
20
26
26
43
43
42
42
54
47
32
31
30
32
31
30
27
28
29
24
26
27
28
29
66
38
22
27
28
29
33
23
67
34
35
36
27
28
29
25
26
70
69
68
37
34

Ref.No	Part No.	Part Names		Q'ty
B-001	06100000UHF0	Table (Set)	(UH1515)	1
	06100000UIC1	Table(set)	(UI1212)	
B-002	06000100UHF0	Fixing Table (A)		1
B-003	GP-008736-01	Fixing Table (B)		1
B-004	GP-008737-01	Fixing Table (C)		1
B-005	GP-008738-01	Fixing Table (D)		1
B-006	GP-008739-01	Fixing Table (E)		1
B-007	GP-008740-02	Fixing Table (F)		1
B-008	06000700UHF0	Fixing Table (G)		1
B-009	06000800UHF0	Moving Table (A)	(UH1515)	1
	06000810UIC0	Moving Table (A)	(UI1212)	
B-010	06000800THF0	Moving Table (B)	(UH1515)	1
	06000910UIC0	Moving Table (B)	(UI1212)	
B-011	06000800THF0	Moving Table (B)	(UH1515)	1
	06001010UIC0	Moving Table (C)	(UI1212)	
B-012	06000900UHF0	Moving Table (D)	(UH1515)	1
	06001110UIC0	Moving Table (D)	(UI1212)	
B-013	06001000UHF0	X-Motor Coupling Cover		1
B-014	08101SC-8329	Tapping Screw (M3*L16)		159
B-015	17019PR-UI12	Mes Cam Driving Box Cover		1
B-016	16037LA-A001	Coupling Cover C (L)		1
B-017	16038LA-A001	Coupling Cover C (R)		1
B-018	06001300UHF0	Table Supporter (A) L1500		1
B-019	06001400UHF0	Table Supporter (B) L450		1
B-020	GP-008742-01	Table Supporter (C) L605		18
B-021	06001600UHF0	Table Supporter (D) L400		3
B-022	06001700UHF0	Table Supporter (E) L310		2
B-023	06001800UHF0	Table Supporter (F) L200		2
B-024	06001900UHF0	Table Supporter (G) L500		3
B-025	06002000UHF0	Table Supporter (H) L385		2
B-026	16009SC-8330	Tapping Screw (M6*L20)		90
B-027	16027SC-4113	Hex. Socket Bolt (M10*L30)		46
B-028	16029SW-3115	Spring Washer (10@)		46
B-029	01007SW-1111	Washer (10@)		46
B-030	03016SC-4113	Hex. Socket Bolt (M5*L15)		20
B-031	18048SW-3115	Spring Washer (@5)		44
B-032	18049SW-3111	Washer (@5)		44
B-033	16021CW-A001	Table Support Stud		6
B-034	04032SN-A001	Hex. Nut (M8-No2)		12
B-035	15095SW-3115	Spring Washer (@8)		6
B-036	04030SW-A001	Stud Bolt Washer(L) (@8)		6

Ref. No	Part No.	Part Names		Q'ty
B-037	04029SW-A001	Stud Bolt Washer(S) (@8)		6
B-038	17012SC-8329	Hex. Socket Set Screw(M4*L16)		20
B-039	16065PR-UK01	Clamp Plate	(UH1515)	12
	16065PR-UK01	Clamp Plate	(UI1212)	10
B-040	16067ET-UK01	Table Toggle Clamp		12
B-041	19002SC-1330	Tapping Screw (4*L16-No1)		40
B-042	17085PM-UK01	Positioning Block		4
B-043	02015SC-7113	Hex.Socket Bolt(M4*L10)		8
B-047	01001900TH00	Table Supporter		5
B-048	16016PR-UK01	Gear Cover		12
B-049	02030SC-T121	Bed Cover Screw(9/64" 40)		24
B-050	16063PM-UK01	Table Holding Block		15
B-051	06001400TH00	X-Cam Roller Cover (A)	(UH1515)	3
	06001410UHF0	X-CAM ROLLER COVER (A)	(UI1212)	
B-052	GP-008741-01	Table Connecting Cover (A)		4
B-053	06001200TH08	Table Connecting Cover (B)		4
B-054	01001700UHF0	Moving Table Supporter (B)		2
B-055	17066AD-UI12	TABLE SUPPORT GUIDE		10
B-056	17071AD-UI12	TABLE SUPPORT		10
B-057	16061PR-UK01	TABLE SUPPORT PLATE (A)		10
B-058	16058AD-UK01	TABLE SUPPORT PLATE (B)		10
B-059	17012SC-8329	HEX. SOCKET SET SCREW(M4*L16)		6
B-060	15089SC-7119	C.S SCREW (M4*L10)		6
B-061	17062SC-UK01	TABLE SUPPORT STOPPER SCREW		3
B-062	17063SC-UK01	TABLE SUPPORT STOPPER SCREW		3
B-063	02015SC-7113	HEX.SOCKET BOLT(M4*L10)		14
B-064	02028SW-9115	SPRING WASHER (@4)		6
B-065	05009SW-1111	WASHER (@4-L)		6
B-066	01001700TH08	TABLE SUPPORTER (I) L500		1
B-067	01001800TH08	TABLE SUPPORTER (I) BRACKET		1
B-068	14046SC-7113	HEX.SOCKET BOLT (M6*L30)		3
B-069	16014SW-4115	SPRING WASHER (@6)		3
B-070	08057SW-1111	WASHER (@6)		3

C

Spool Stand

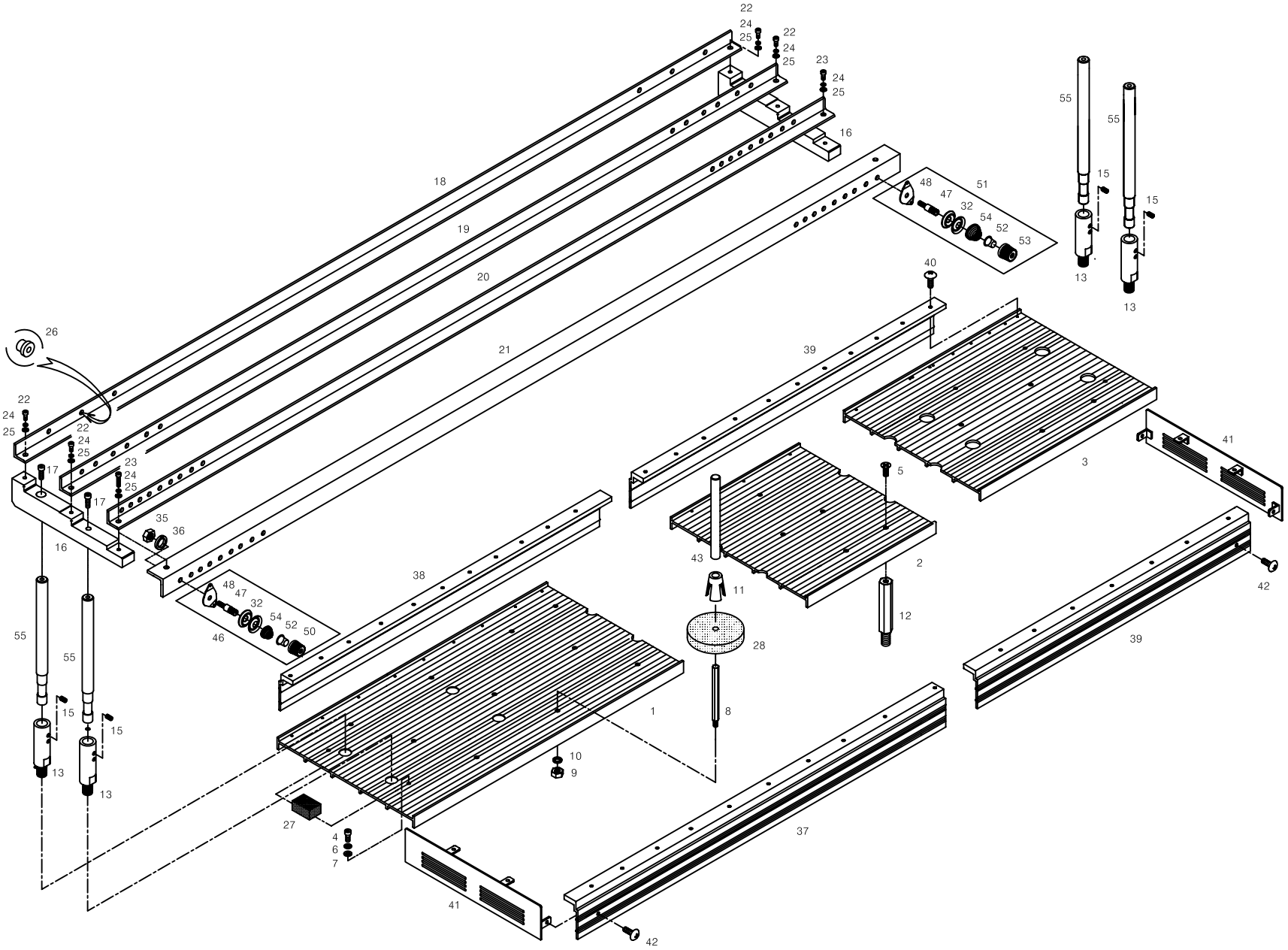

Ref. No	Part No.	Part Names		Q'ty
C-001	10700105UHF0	Spool Plate A (L2840)	(UH1515)	1
	10700104UIC0	Spool Plate A (2190)	(UI1212)	
C-002	10700205UHF0	Spool Plate B (L800)	(UH1515)	1
	10700204UIC0	Spool Plate B(860) UI1212	(UI1212)	
C-003	10700305UHF0	Spool Plate C (L2440)	(UH1515)	1
	10700304UIC0	Spool Plate C (L2190)	(UI1212)	
C-004	02010SC-3123	TRUSS SCREW (M4*L8)		10
C-005	15089SC-7119	C.S Screw (M4*L10)		8
C-006	18014SW-3115	Spring Washer (@4-No2)		10
C-007	18015SW-3111	Washer (4@)		10
C-008	12009SC-A001	Spool Post		180
C-009	12010SN-1211	Hex.Nut (M5)		225
C-010	18048SW-3115	Spring Washer (@5)		180
C-011	12012PM-A001	Spool Holder		225
C-012	10000110H000	Spool Plate Fixing Bolt (L60.5)	(UH1515)	22
	10000110H000	Spool Plate Fixing Bolt (L60.5)	(UI1212)	20
C-013	01000500H000	Spool Stand Stud Bolt (L113)	(UH1515)	18
	01000500H000	Spool Stand Stud Bolt (L113)	(UI1212)	16
C-015	04014SC-4517	Hex.Socket Set Screw(M5*L5)		28
C-016	10600100H000	Thread Angle Frame		7
C-017	03016SC-4113	Hex. Socket Bolt (M5*L15)		14
C-018	10600105UHF0	Angle (A) L=6020		1
	10600214UIC0	Angle A(5180) UI1212		
C-019	10600205UHF0	Angle (B) L=6020		1
	10600314UIC0	Angle B(5180) UI1212		
C-020	10600305UHF0	Angle (C) L=6020		1
	10600414UIC0	Angle C(5180) UI1212		
C-021	10600405UHF0	Angle (D) L=6020		1
	10600514UIC0	Angle D(5180) UI1212		
C-022	02015SC-7113	Hex.Socket Bolt(M4*L10)		7
C-023	05008SC-4113	Hex.Socket Bolt (M4*L16)		7
C-024	02028SW-9115	Spring Washer (@4)		21
C-025	06003SW-2111	Washer (@4)		21
C-026	12042PM-A001	Eyelet		450
C-027	12049SF-A001	Felt		2
C-028	12052SF-A001	Spool Sponge		225
C-032	11153PR-B001	Tension Disc @22		450
C-035	03031SN-A001	Pin. Nut (11/64,N=40)		225
C-036	18048SW-3115	Spring Washer (@5)		225
C-037	10600500UHF0	Spool Plate Cover	(UH1515)	1
	10600500UIC0	Spool Plate Cover A (L=2414)	(UI1212)	

Ref. No	Part No.	Part Names		Q'ty
C-038	10600600UHF0	Spool Plate Cover		1
	10600600UIC0	Spool Plate Cover B(2114) UI1212		
C-039	10600700UHF0	Spool Plate Cover		1
	10600700UIC0	Spool Plate Cover C(2114) UI1212		
C-040	18153SC-3123	Plus Screw (M4*L10)		44
C-041	10000600H000	Spool Plate Side Cover		2
C-042	18153SC-3123	Plus Screw (M4*L10)		8
C-043	10600800UHF0	Spool Plate Cover		1
	10600800UIC0	Spool Plate Cover D(2114) UI1212		
C-046	10600110B000	Sub Tension Adjusting Set(New)		210
C-047	08301000A000	Tension Adjusting Stud		225
C-048	11162PR-A001	Tension Plate (New)		225
C-050	08300600A000	Sub Tension Adjusting Nut(A)		210
C-051	10600210B000	SUB TENSION ADJUSTING SET	(black)	15
C-052	11088PM-A001	TENSION SPRING STOPPER		225
C-053	10600610A000	SUB TENSION ADJUSTING NUT B	(black)	15
C-054	08301100A000	Tension Spring		225
C-055	01001500H000	SPOOL STAND (L=280)	(UH1515)	18
	01001500H000	SPOOL STAND (L=280)	(UI1212)	14

D

Main Drive System

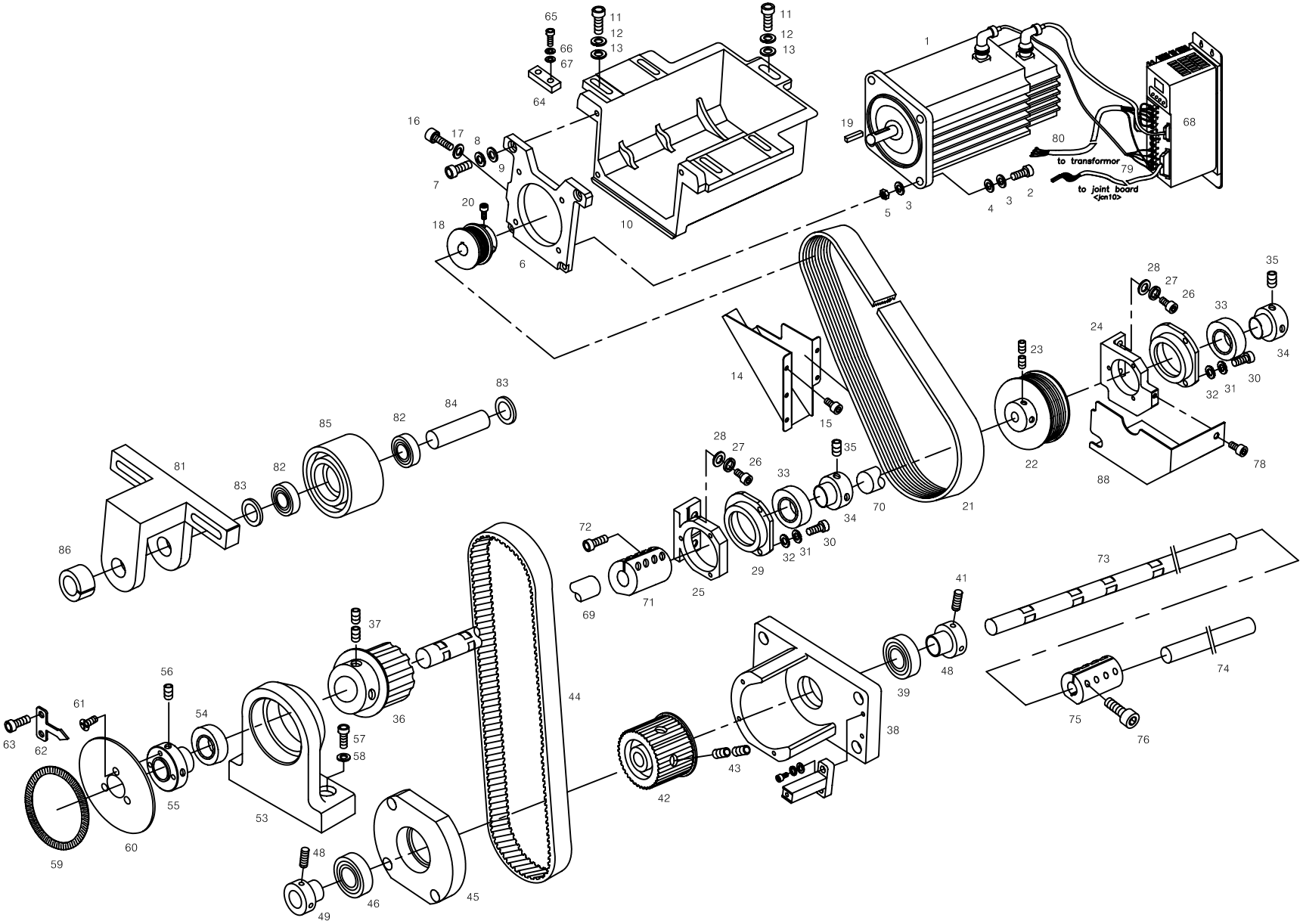

Ref.No	Part No.	Part Names	Q'ty
D-001	14026AF-B001	Main Motor (Sanyo, 1Kw)	1
D-002	15019SC-4113	Hex. Socket Bolt (M8*L40)	4
D-003	15095SW-3115	Spring Washer (@8)	8
D-004	04029SW-A001	Stud Bolt Washer(S) (@8)	4
D-005	04032SN-A001	Hex. Nut (M8-No2)	4
D-006	03100510H000	Bracket	1
D-007	14027SC-4113	Hex.Socket Bolt (M8*L30)	4
D-008	15095SW-3115	Spring Washer (@8)	4
D-009	04029SW-A001	Stud Bolt Washer(S) (@8)	4
D-010	03100210H000	Main Motor Bracket	1
D-011	14027SC-4113	Hex.Socket Bolt (M8*L30)	5
D-012	15095SW-3115	Spring Washer (@8)	5
D-013	04029SW-A001	Stud Bolt Washer(S) (@8)	5
D-014	12000720H000	Top Shaft Driving Belt Cover	1
D-015	05008SC-4113	Hex.Socket Bolt (M4*L16)	5
D-016	15020SC-4113	Hex,Socket Bolt (M8*L50)	1
D-017	04029SW-A001	Stud Bolt Washer(S) (@8)	1
D-018	03100400H000	Main Motor Pulley	1
D-020	03016SC-4113	Hex. Socket Bolt (M5*L15)	3
D-021	03100700H000	Main Driving Belt 290J*10R	1
D-022	03005010H000	Top Shaft Drive Pulley	1
D-023	14061AF-4517	Hex.Socket Screw(M8*L8)	4
D-024	03005110H000	Top Shaft Bracket "A"	1
D-025	03008400H000	Top Shaft Bracket "C"	1
D-026	08087SC-7113	Hex. Socket Bolt (M8*L25)	4
D-027	15095SW-3115	Spring Washer (@8)	4
D-028	04029SW-A001	Stud Bolt Washer(S) (@8)	4
D-029	03008500H000	Top Shaft Bearing Case "B"	2
D-030	03016SC-4113	Hex. Socket Bolt (M5*L15)	6
D-031	18048SW-3115	Spring Washer (5@)	6
D-032	18049SW-3111	Washer (@5)	6
D-033	01000100H000	Hex. Bolt (M16*L60)	2
D-034	03005210H000	Collar "A"	2
D-035	14060AF-4517	Hex.Socket Screw(M6*L6)	4
D-036	03005300UHF0	Timing Pulley 38-S5M-040-Bf	1
D-037	14061AF-4517	Hex.Socket Screw(M8*L8)	4
D-038	14024CA-UI12	Timing Pulley Housing	1
D-039	01029BR-A001	Ball Bearing (6004Zz)	1
D-040	14058CW-A001	Collar "A"	1
D-041	14060AF-4517	Hex.Socket Screw(M6*L6)	2

Ref. No	Part No.	Part Names	Q'ty
D-042	03200220H000	Low Shaft Timing Pulley	1
D-043	14061AF-4517	Hex.Socket Screw(M8*L8)	4
D-044	03200300UHF0	Timing Belt (40C-S5M-950-F)	1
D-045	14028CW-UI12	Housing Cover	1
D-046	01029BR-A001	Ball Bearing (6004Zz)	1
D-047	14058CW-A001	Collar "A"	1
D-048	14060AF-4517	Hex.Socket Screw(M6*L6)	2
D-049	14002SC-7113	Hex.Socket Bolt (M6*L15)	4
D-053	03005410H000	Top Shaft Bracket "B"	1
D-054	01001100H000	Ball Bearing (6005Zz)	1
D-055	03005510H000	Collar "B" @20	1
D-056	14060AF-4517	Hex.Socket Screw(M6*L6)	2
D-057	08091SC-7113	Hex. Socket Bolt (M6*L20)	2
D-058	16014SW-4115	Spring Washer (@6)	2
D-059	03005600H000	Angle Disk	1
D-060	03005710H000	Angle Plate Base @20	1
D-061	21002SC-8119	Plus Screw (M3-L8)	3
D-062	03005800H000	Indicator	1
D-063	02023SC-7113	Hex.Socket Bolt (M4*L8)	2
D-064	03100600H000	Main Motor Guide	2
D-065	05008SC-4113	Hex.Socket Bolt (M4*L16)	4
D-066	18014SW-3115	Spring Washer (@4-No2)	4
D-067	18015SW-3111	Washer (4@)	4
D-068	24031AF-B001	Main Motor Drive (Sanyo,1Kw)	1
D-069	03000300UHF0	Upper Shaft "A" (@20,L1784)	1
D-070	03000400UHF0	Upper Shaft "B" (@20,L1100)	1
	03000500UHF0	Upper Shaft "C" (@20,L800)	1
	03000600UHF0	Upper Shaft "E" (@20,L1600)	1
D-071	03006710HDK0	Coupling @20	4
D-072	08091SC-7113	Hex. Socket Bolt (M6*L20)	16
D-073	03000700UHF0	Lower Shaft "A" (@15,L363)	1
D-074	03000800UHF0	Lower Shaft "B" (@15,L1935)	3
D-075	03007500H000	Low Coupling (High-Speed)	3
D-076	08091SC-7113	Hex. Socket Bolt (M6*L20)	12
D-078	18033SC-3123	Truss Screw (M5*L6)	2
D-079	02100500HDK2	Main Power Driver To J/B	1
D-080	02100600HDK2	Main Motor Power Cable	1
D-081	14037CA-UI12	Idler Bracket	1
D-082	01029BR-A001	Ball Bearing (6004Zz)	2
D-083	14042PR-UI12	Idler Shaft Space	2

D

Main Drive System

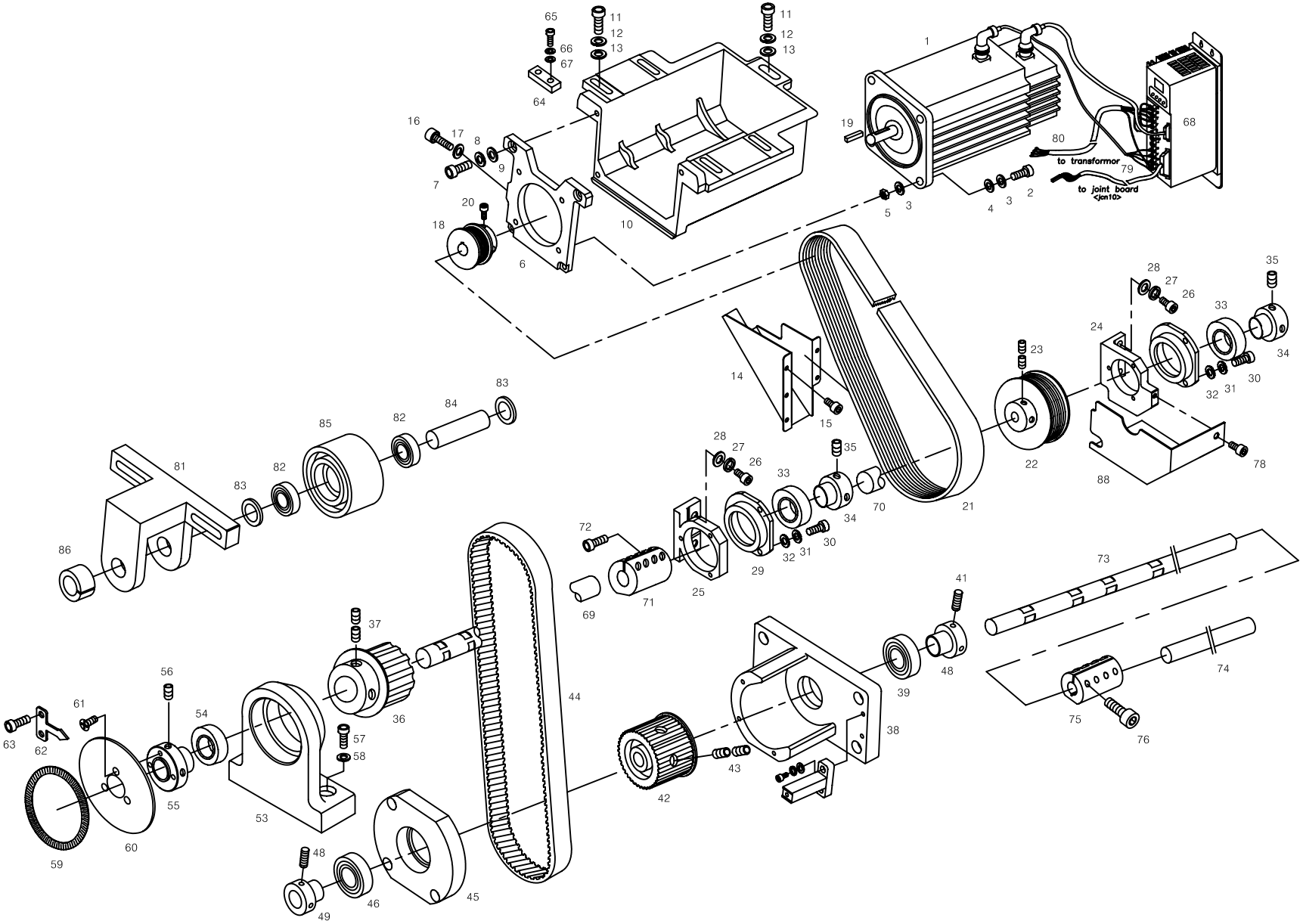

Ref.No		Part Names	Q'ty
D-084	14041CW-UI12	Idler Shaft	1
D-085	14045CW-UI12	Idler	1
D-086	14042PR-UI12	Idler Shaft Space	2
D-088	03006410H000	TOP SHAFT DRIVING PULLEY COVER	1

Ref. No	Part No.	Part Names	Q'ty

E

Bed I

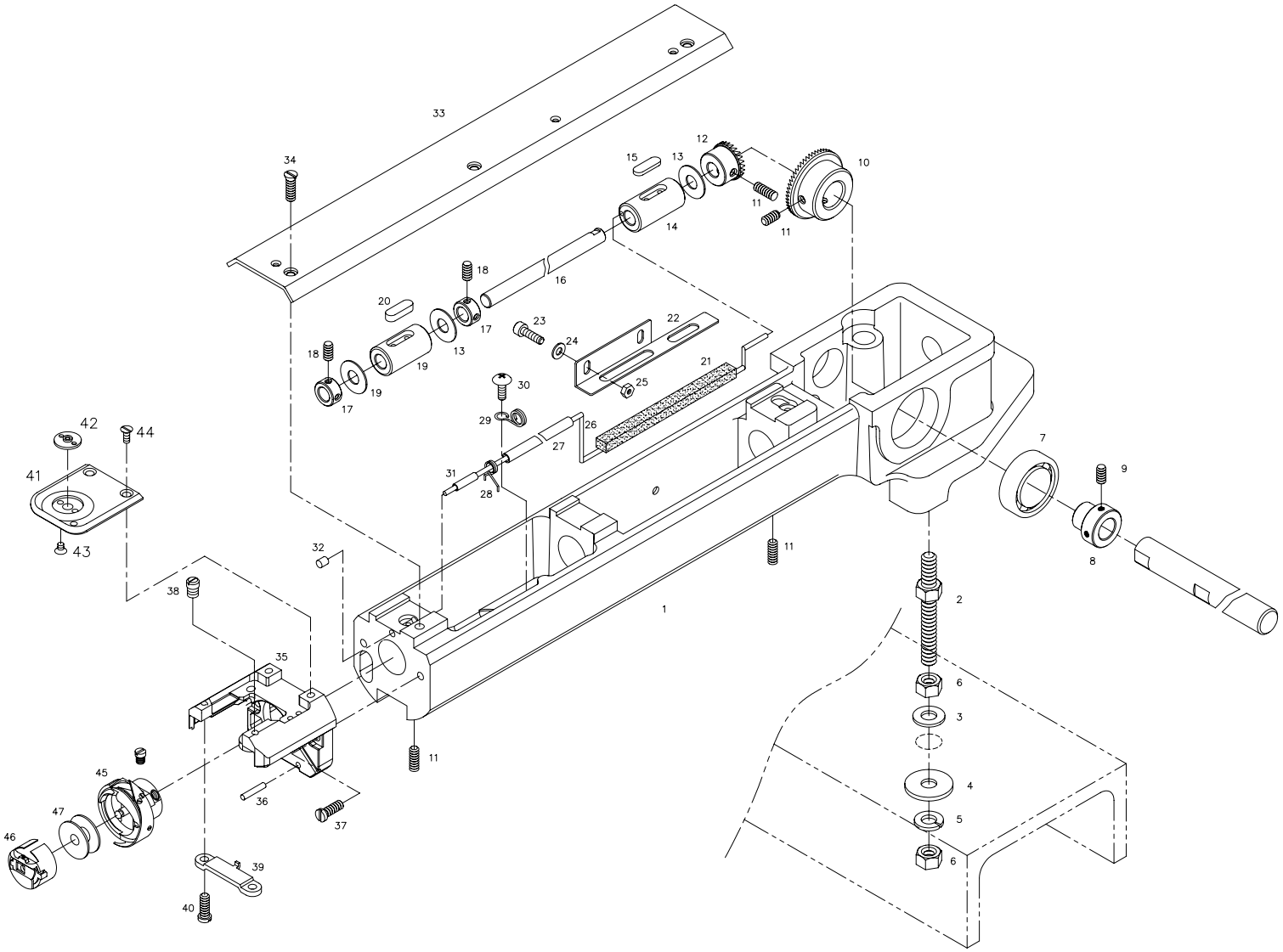
33
34
15
13
12
10
11
14
18
16
20
17
23
22
24
18
19
13
21
19
25
17
30
29
26
27
42
44
41
31
28
7
9
43
32
11
8
38
1
2
35
6
3
11
45
4
36
47
37
5
46
39
6
40

Ref.No	Part No.	Part Names	Q'ty
E-001	GP-005355-00	Bed "A"	15
E-002	04028SC-UK01	STUD BOLT (M10*P1.25*L69)	45
E-003	04013PR-B001	WASHER (3.2T,@10)	90
E-004	04014PR-B001	WASHER (2T,@10)	45
E-005	01008SW-9115	SPRING WASHER(@10)	45
E-006	04032SN-UK01	HEX. NUT (M10*P1.25)	90
E-007	04026BR-A001	Ball Bearing 6003Z	15
E-008	01102000B000	Bearing Bushing	15
E-009	04016AF-A001	Cam Collar Screw	30
E-010	01101700U000	LOW SHAFT GEAR	15
E-011	04012AF-A001	Hook Shaft Bush Screw	30
E-012	01101900U000	Hook Shaft Gear	15
E-013	02004BR-T121	Hook Shaft Bearing Washer	30
E-014	01102200U000	Hook Shaft Rear Bushing	15
E-015	18039SF-UK01	Felt	15
E-016	02100300U000	Hook Shaft	15
E-017	03707300A000	Solenoid Collar	15
E-018	08113SC-A001	Collar Screw	30
E-019	02000300T000	Hook Shaft Front Bushing	15
E-020	32043SF-T121	Front Bushing Felt	15
E-021	18041SF-UK01	Bed Felt	15
E-022	32040PR-T121	Bed Felt Cover	15
E-023	02023SC-7113	Hex. Socket Bolt (M4*L8)	30
E-024	02063SW-1111	Washer(@4)	30
E-025	15029SN-3122	Hex.Nut (M4)	30
E-026	18044ET-UK01	Wick	15
E-027	18045ET-UK01	Oil Tube	15
E-028	32046SP-T121	Holder For Oil Hose	15
E-029	32021SP-T121	Needle Bar Hose Holder "A"	15
E-030	28021SC-3123	Truss Screw (M3*L4)	15
E-031	32045CW-T121	Oil Hose Pin A	15
E-032	32047RB-T121	Oil Rubber Cap	15
E-033	GP-005359-00	Bed Cover	15
E-034	02030SC-T121	Bed Cover Screw(9/64" 40)	46
E-035	GP-005357-01	Needle Plate Bracket	15
E-036	02008SC-4122	NEEDLE PLATE BRACKET SCREW	30
E-037	02009PI-T121	Spring Pin	30
E-038	04026SC-T121	Needle Plate Pin	15
E-039	GP-005358-01	Rotary Hook Support	15
E-040	02011SC-3125	Rotary Hook Support Screw	30

Ref. No	Part No.	Part Names	Q'ty
E-041	02019PR-T121	Needle Plate(Cap)	15
E-042	02022CW-T121	NEEDLE GUIDE PLATE(FLAT)	15
	GP-010385-00	NEEDLE GUIDE PLATE(FLAT Sequin)	15
E-043	02022SC-T121	Cushion Cover Screw (M3*L3)	30
E-044	04004AF-A001	Needle Plate Screw	30
E-045	04033AF-D002	Rotary Hook Set	15
E-046	04034AF-A001	Bobbin Case Set	15
E-047	04035AF-A001	Bobbin	15

Bed II

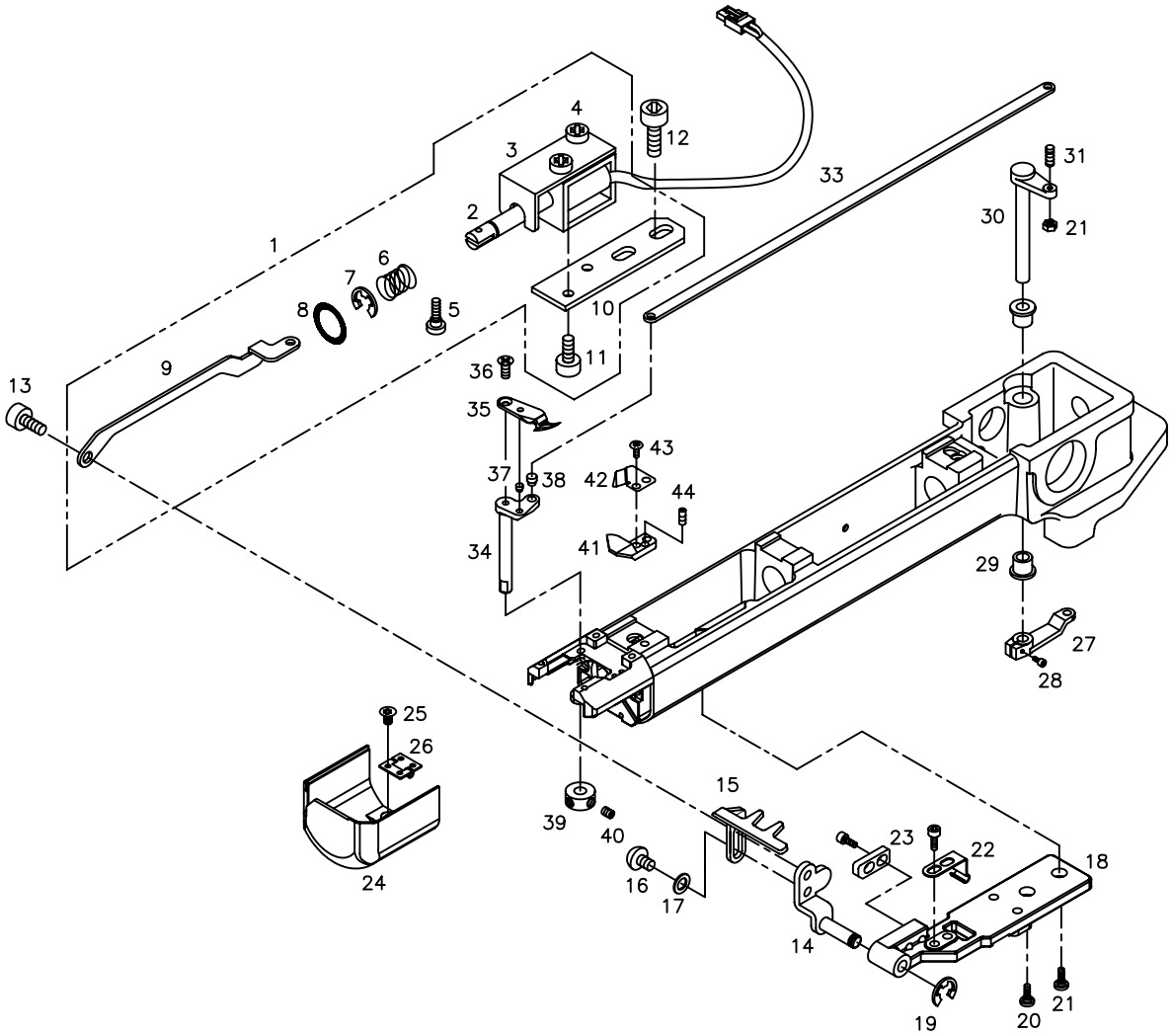
1
2
3
4
5
6
7
8
9
10
11
12
13
14
15
16
17
18
19
20
21
22
23
24
25
26
27
28
29
30
31
33
34
35
36
37
38
39
40
41
42
43
44

Ref.No	Part No.	Part Names	Q'ty
F-001	AS-002025-00	Picker Sol. Set	15
F-002	10009EL-T121	Picker Sol.	15
F-003	01-012A-AT10	Picker Sol. Cover	15
F-004	28021SC-3123	Truss Screw (M3*L4)	30
F-005	10021SC-A001	Sol. Stud Screw	15
F-006	10011SP-A001	Sol. Spring	15
F-007	13044SR-4013	E-Ring (@4)	15
F-008	10012RB-A001	Cushion Washer	15
F-009	GP-005370-00	Connecting Plate	15
F-010	01-013A-AT10	Picker Sol. Base	15
F-011	06010AF-8118	Plus Screw(M3*L4)	30
F-012	02015SC-7113	Hex.Socket Bolt(M4*L10)	30
F-013	08012CW-T121	Connecting Plate Stud Screw	15
F-014	AS-001429-00	Picker Base Ass'Y	15
F-015	GP-005368-00	Picker	15
F-016	07018SC-8118	Plus Screw (M3*L8)	30
F-017	WS-000085-00	Washer for Picker Base	15
F-018	GP-005366-00	Picker Bracket	15
F-019	15159SR-4013	E-Ring (3@)	15
F-020	08016SC-T121	Plus Screw(15/64*N28)	15
F-021	116410S-8118	Driver Screw 11/64-40,L10	15
F-022	GP-005362-00	Hook Cover Holder	15
F-023	GP-005369-00	Picker Stopper	15
F-024	GP-005360-01	Hook Cover	15
F-025	08014AF-A001	Plus Screw (M3*L8)	30
F-026	HG-000001-00	Hook Cover Hinge	15
F-027	02100400U000	Mes Driving Lever	15
F-028	02015SC-7113	Hex.Socket Bolt(M4*L10)	15
F-029	07021MP-T121	Lever Shaft Bush	30
F-030	03001100U000	Mes Driving Lever Shaft "A"	15
F-031	07023CW-T121	Lever Pin "A"	15
F-032	02029SN-9311	Hex. Nut (M4-No2)	15
F-033	07006LA-UK01	Mes Connecting Link	15
F-034	GP-006638-00	Moving Mes Shaft	15
F-035	07028PR-T121	Moving Mes	15
F-036	08014SC-A001	Plus Screw (M3*L8)	15
F-037	08122CW-A001	MES PIN	15
F-038	08123CW-T121	MOVING MES CONNECTING LINK PIN	15
F-039	13003000T000	Mes Shaft Collar	15
F-040	03022SC-4517	Hex. Socket Set Screw(M4*L5)	30

Ref. No	Part No.	PartNames	Q'ty
F-041	07032CL-T121	Fixed Mes	15
F-042	07033PR-T121	Under Thread Presser	15
F-043	07018SC-8118	Plus Screw (M3*L8)	30
F-044	03050SC-4517	Hex. Socket Set Screw (M3*L3)	15

G

Thread Cutting Drive System

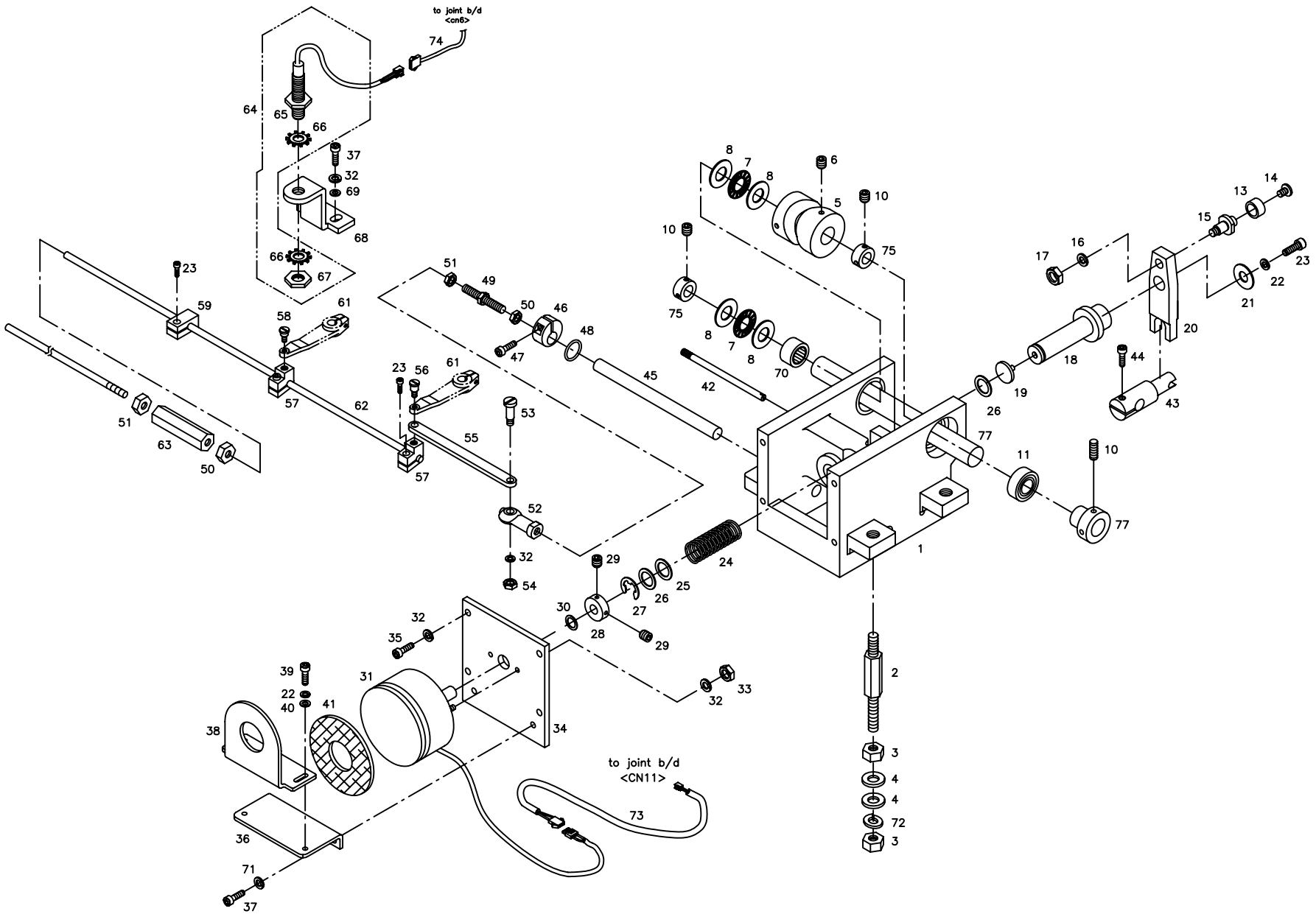

Ref.No	Part No.	PartNames	Q'ty
G-001	08032CS-UI12	Mes Cam Driving Box	1
G-002	08033CW-UI12	Box Stud Bolt (M10*P1.25*L69	4
G-003	26032SN-1211	Hex. Nut (M10-No2)	8
G-004	04013PR-B001	Washer (3.2T,@10)	4
G-005	08037CM-UI12	Mes Cam	1
G-006	08038SC-UI12	Hex.Socket Set Screw	3
G-007	08027BR-A001	Thrust Bearing (Ntb 1528)	2
G-008	08028BR-A001	Thrust Washer (As 1528)	4
G-010	04016AF-A001	Cam Collar Screw	6
G-011	04026BR-A001	Ball Bearing 6003Z	1
G-012	04020CW-A001	Bearing Bushing	1
G-013	08046CW-UI12	Cam Roller	1
G-014	08047SC-UI12	Cam Roller Screw	1
G-015	08048CW-UI12	Cam Collar Pin	1
G-016	16014SW-4115	Spring Washer (@6)	1
G-017	08058SN-1311	Hex. Nut (M6-No3)	1
G-018	08047CW-A001	Lever Support Pin	1
G-019	08052RB-A001	Lever Support Pin Cushion	1
G-020	08053CL-UI12	Mes Cam Lever	1
G-021	08053PR-A001	Lever Washer	1
G-022	02028SW-9115	Spring Washer (@4)	3
G-023	02015SC-7113	Hex.Socket Bolt(M4*L10)	48
G-024	08057SP-UI12	Lever Return Spring	1
G-025	08050SW-A001	Lever Stopper Pin Washer	1
G-026	08049RB-A001	Cushion Washer (T1)	2
G-027	08051SR-4013	E-Ring (@12)	1
G-028	08073CW-A001	Solenoid Collar	1
G-029	08113SC-A001	Collar Screw	2
G-030	08072RB-A001	Cushion Rubber	1
G-031	08068EL-A001	Thread Trimming Solenoid Ass'	1
G-032	18048SW-3115	Spring Washer (@5)	9
G-033	12010SN-1211	Hex. Nut (M5-No3)	2
G-034	08068PR-UI12	Solenoid Base Plate	1
G-035	08076SC-7113	Hex. Socket Bolt (M5*L12)	4
G-036	08071PR-UI12	Attach Plate "A"	1
G-037	02031SC-7113	Hex. Socket Screw(M5*L10)	4
G-038	08074PR-UI12	Attach Plate "B"	1
G-039	02023SC-7113	Hex. Socket Bolt (M4*L8)	2
G-040	02063SW-1111	Washer(@4)	2
G-041	08071SF-A001	Solenoid Cushion	3

Ref. No	Part No.	Part Names	Q'ty
G-042	08079CW-UI12	Mes Driving Guide Shaft	1
G-043	08080CW-UI12	Lever Driver Pin	1
G-044	08062SC-7113	Hex. Socket Bolt (M5*L20)	1
G-045	08028CW-UI12	Mes Driving Shaft	1
G-046	08065CW-A001	Stopper Collar	1
G-047	03016SC-4113	Hex. Socket Bolt (M5*L15)	1
G-048	08067RB-A001	O-Ring (@10)	1
G-049	08025CW-UI12	Adjusting Bolt	1
G-050	13042SN-1111	Hex.Nut (M6*T5-R)	4
G-051	17053SN-1111	Hex. Nut(L) (M6*T5-L)	3
G-052	08024BR-UI12	Rod End Bearing (Thk Nhs6Tl)	1
G-053	08021CW-UI12	Link Stud Bolt "B"	1
G-054	12010SN-1211	Hex. Nut (M5-No3)	1
G-055	03000700TH00	Thread Lever Connect Link	1
G-056	08016CW-UK01	Link Stud Bolt	1
G-057	08023CL-UK01	Mes Shaft Cramp	12
G-058	08019CW-UK01	Clamp Stud Bolt	11
G-059	08023CW-A001	Mes Shaft Cramp	1
G-061	02100400U000	Mes Driving Lever	12
G-062	03001000UHF0	Mes Driving Shaft "A"(L1865)	1
	03001100UHF0	Mes Driving Shaft "B"(L1865)	1
	03001200UHF0	Mes Driving Shaft "C"(L1865)	1
G-063	17051SN-A001	Mes Priving Shaft Joint	3
G-064	08102EL-A001	Zero Point Sensor Ass'Y	1
G-068	08070PR-UK01	Sensor Bracket	1
G-069	16018SW-1111	Washer (@5)	2
G-070	04027BR-A001	Needle Bearing (Hmk1515)	1
G-071	18048SW-3115	Spring Washer (@5)	2
G-072	01008SW-9115	Spring Washer(@10)	4
G-073	25023EL-UI12	Cable (12Ht-28)	1
G-074	25035EL-UI12	Cable (12Ht-35)	1
G-075	03704900A000	Cam Shaft Collar	2
G-077	14060SH-UI12	LOW SHAFT "A" (@15,L187)	1

H

Arm I

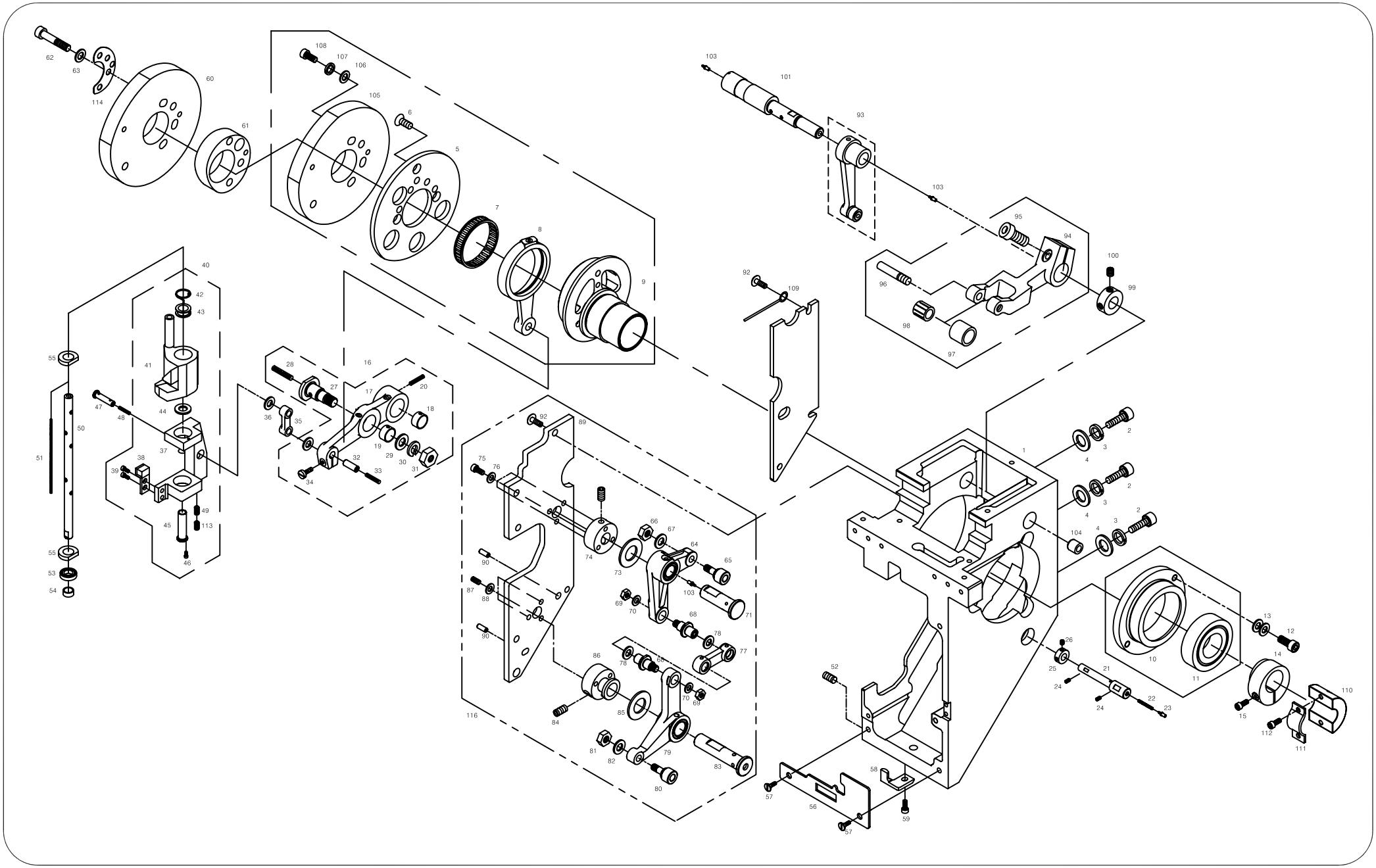
62
63
114
60
61
108
107
106
105
6
5
7
8
9
103
101
93
103
95
94
100
99
96
98
97
92
109
40
42
43
41
55
47
48
44
50
51
37
38
39
49
113
45
46
55
53
54
28
27
16
17
20
18
36
35
19
29
30
31
32
33
34
92
89
75
76
74
73
66
67
64
65
103
71
90
87
88
69
70
68
78
77
90
86
76
68
70
69
85
84
116
81
82
79
83
80
1
2
3
4
2
3
4
2
3
4
104
13
12
14
10
11
26
25
21
24
24
22
23
15
112
111
110
52
58
57
56
59
57

Ref.No	Part No.	PartNames	Q'ty
H-001	GP-009407-00	ARM	15
H-002	03003SC-4113	Hex. Socket Bolt	45
H-003	15095SW-3115	Spring Washer (@8)	45
H-004	04029SW-A001	Stud Bolt Washer(S) (@8)	45
H-005	GP-005992-00	CAM BASE	15
H-006	03007SC-A001	Cam Base Screw	45
H-007	03302900H000	NEEDLE CASE (KT-42469)	15
H-008	03303000H000	Connecting Rod	15
H-009	GP-005990-00	NEEDLE BAR DRIVING CAM	15
H-010	03303100H000	Bearing Case A @20	15
H-011	01001100H000	Ball Bearing (6005Zz)	15
H-012	02031SC-7113	Hex. Socket Screw(M5*L10)	15
H-013	02030SW-B001	Washer (5@)	90
H-014	03000110H000	Cam Tightening Collar (@20)	15
H-015	03016SC-4113	Hex. Socket Bolt (M5*L15)	15
H-016	03313200I000	NEEDLE BAR DRIVE LEVER(SET)	15
H-017	03000600I000	NEEDLE BAR DRIVE LEVER	15
H-018	03307200A000	Needle Driving Lever Bushing	15
H-019	03307300A000	Needle Driving Lever Bushing	15
H-020	32003ET-T121	Wick	15
H-021	03300500H000	NEEDLE BAR DRIVE PIN	15
H-022	32003ET-T121	Wick	15
H-023	01301600H000	Hook Oil Supply Nipple	30
H-024	03020SC-A001	Drive Pin Screw 11/64,N40,L8	15
H-025	01101300A000	Hook Shaft Collar	30
H-026	04012AF-A001	Hook Shaft Bush Screw	15
H-027	03023SC-A001	Connecting Rod Stud	15
H-028	32003ET-T121	Wick	15
H-029	03025SW-1211	Washer (@6)	15
H-030	03026SW-9115	Spring Washer (@6)	15
H-031	03027SN-A001	Stud Nut	15
H-032	03303300H000	Lever Pin	15
H-033	32003ET-T121	Wick	15
H-034	02015SC-7113	Screw(M4*L10)	15
H-035	03003200A000	Needle Bar Drive Rink	15
H-036	03034SW-A001	Reciprocator Washer	15
H-037	03600100I000	Needle Bar Driving Shaft Driver	15
H-038	03047PM-CT01	Stopper-A'ssy	15
H-039	26006MC-8118	Stopper Screw (M2.6*L6)	30
H-040	03600000I000	Needle Bar Reciprocator A'ssy	15

Ref. No	Part No.	Part Names	Q'ty
H-041	03600200I000	Needle Bar Reciprocator	15
H-042	03045SP-B001	Jump Spring	15
H-043	03046CW-B001	Jump Spring Guide	15
H-044	03048SW-A001	Reciprocator Washer	15
H-045	03304710A000	NEEDLE BAR DRIVING SHAFT BUSH	15
H-046	09005SC-3123	Truss Screw (M3*L6)	15
H-047	03033CW-A001	Driver Pin	15
H-048	32003ET-T121	Wick	15
H-049	03020SC-A001	Drive Pin Screw 11/64,N40,L8	15
H-050	03007900H000	Needle Bar Driving Shaft	15
H-051	32003ET-T121	Wick	15
H-052	03020SC-A001	Drive Pin Screw 11/64,N40,L8	15
H-053	03008000H000	Ball Bearing 6800	15
H-054	03008100K000	Needle Bar Drive Bearing Bush	15
H-055	03042SF-T121	FELT "A"	30
H-056	03302600I000	Arm Bearing Guide Plate	15
H-057	05062SC-A001	Bolt (9/64" n=40)	30
H-058	03056CL-B001	Head Rail Holder	15
H-059	03057SC-A001	Head Rail Holder Screw	15
H-060	GP-005991-00	PRESSER FOOT DRIVING CAM	15
H-061	03301000I000	Csm Spacer	15
H-062	SC-000284-00	SCREW FOR DRIVING LEVER	45
H-063	WS-000082-00	PRESSER FOOT DRIVING CAMWASHER	45
H-064	AS-001608-01	PRESSER FOOT DRIVING LEVER A SET	15
H-065	AS-000392-00	Presser Foot Driving Roller Hinge Pin Assy'	15
H-066	15029SN-3211	Nut (@4)	15
H-067	18015SW-3111	Washer (@4)	15
H-068	03800300I000	Presser Foot Driving Lever Pin (C)	15
H-069	03031SN-A001	Nut (11/64" n=40)	15
H-070	18048SW-3115	Washer	15
H-071	PN-000152-00	PRESSER FOOT DRIVING LEVER PIN A	15
H-072	14060AF-4517	Hex. Socket Bolt (M6*L6)	15
H-073	16014SW-4115	Washer	15
H-074	03800500I000	Presser Foot Driving Lever Bracket (A)	15
H-075	03071SC-7113	HEX. SOCKET BOLT (M3*L10)	45
H-076	11019SW-9115	Washer (@3)	45
H-077	03800600I000	Presser Foot Drving Lever Connecting Link	15
H-078	03034SW-A001	Washer	30
H-079	AS-002051-01	PRESSER FOOT DRIVING LEVER B SET	15
H-080	03800800I000	Presser Foot Stopper Roller Hinge Pin (C) Assy'	15

H

Arm I

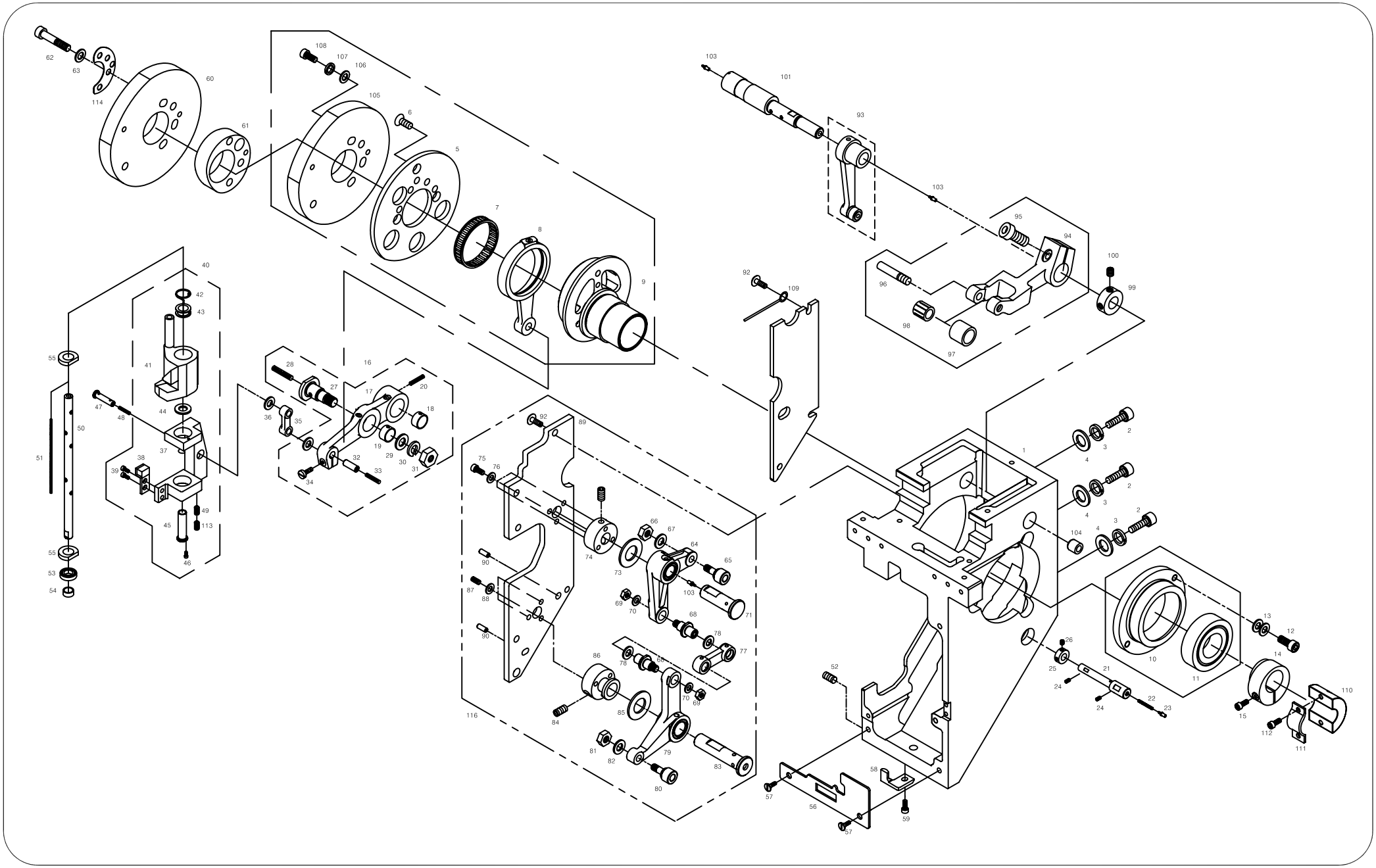
62
63
114
60
61
108
107
106
105
6
5
7
8
9
103
101
93
103
95
94
100
99
96
98
97
92
109
40
42
43
41
55
47
48
44
50
51
37
38
39
49
113
45
46
55
53
54
28
27
16
17
20
18
36
35
19
29
30
31
32
33
34
92
89
75
76
74
73
66
67
64
65
103
71
90
87
88
69
70
68
78
77
90
86
76
68
70
69
85
84
116
81
82
79
83
80
1
2
3
4
2
3
4
2
3
4
104
13
12
14
10
11
26
25
21
24
24
22
23
15
112
111
110
52
58
57
56
59
57

Ref.No	Part No.	Part Names	Q'ty
H-081	15029SN-3211	Nut (@4)	15
H-082	18015SW-3111	Washer (@4)	15
H-083	PN-000153-00	PRESSER FOOT DRIVING LEVER PIN B	15
H-084	14060AF-4517	Hex. Socket Bolt (M6*L6)	15
H-085	02004BR-T121	Washer	15
H-086	03801000I000	Presser Foot Driving Lever Bracket (B)	15
H-087	03071SC-7113	HEX. SOCKET BOLT (M3*L10)	45
H-088	06011SW-2111	Washer (@3)	45
H-089	03302200I000	ARM SIDE COVER A	15
H-090	03302300I000	Base Pin for Arm Side Cover	30
H-091	03302310H000	ARM SIDE COVER B	15
H-092	02010SC-A001	SCREW (9/64,N40,L8)	30
H-093	03314100A000	Take-Up Driving Lever "A"	15
H-094	07018CA-UK01	Take-Up Driving Lever "B"	15
H-095	07016SC-7113	Hex.Socket Bolt(M4*L12)	15
H-096	04019CW-T121	Pin Stud Screw	15
H-097	04020AF-T121	Roller for Take-Up Lever B	15
H-098	04021BR-T121	Needle Bearing (KT367N IKO)	15
H-099	03302100A000	Pin Collar	15
H-100	03022SC-4517	Hex.Socket Set Screw(M4*L5)	30
H-101	PN-000154-00	TAKE-UP LEVER PIN	15
H-102	32003ET-T121	Wick	15
H-103	01301600H000	Hook Oil Supply Nipple	45
H-104	03301200A000	Bushing	15
H-105	03300700I000	Take-Up Lever Driving Cam	15
H-106	06003SW-2111	Washer (@4)	15
H-107	06003SW-2111	Washer (@4)	30
H-108	02023SC-7113	Hex. Socket Bolt (M4*L8)	30
H-109	03062ET-A001	Cable Fastener	15
H-110	03008700H000	Balunce Cam	15
H-111	03008800H000	Balunce Cam Bracket	15
H-112	18047SC-7113	Hex. Socket Bolt (M5*L15)	30
H-113	08113SC-A001	COLLAR SCREW 11/64,N=40,L6	15
H-114	WS-000081-00	PRESSER FOOT DRIVING CAM WASHE	15
H-116	AS-002145-02	Arm Side Cover Ass'y	20

Ref. No	Part No.	Part Names	Q'ty

H1

Arm II

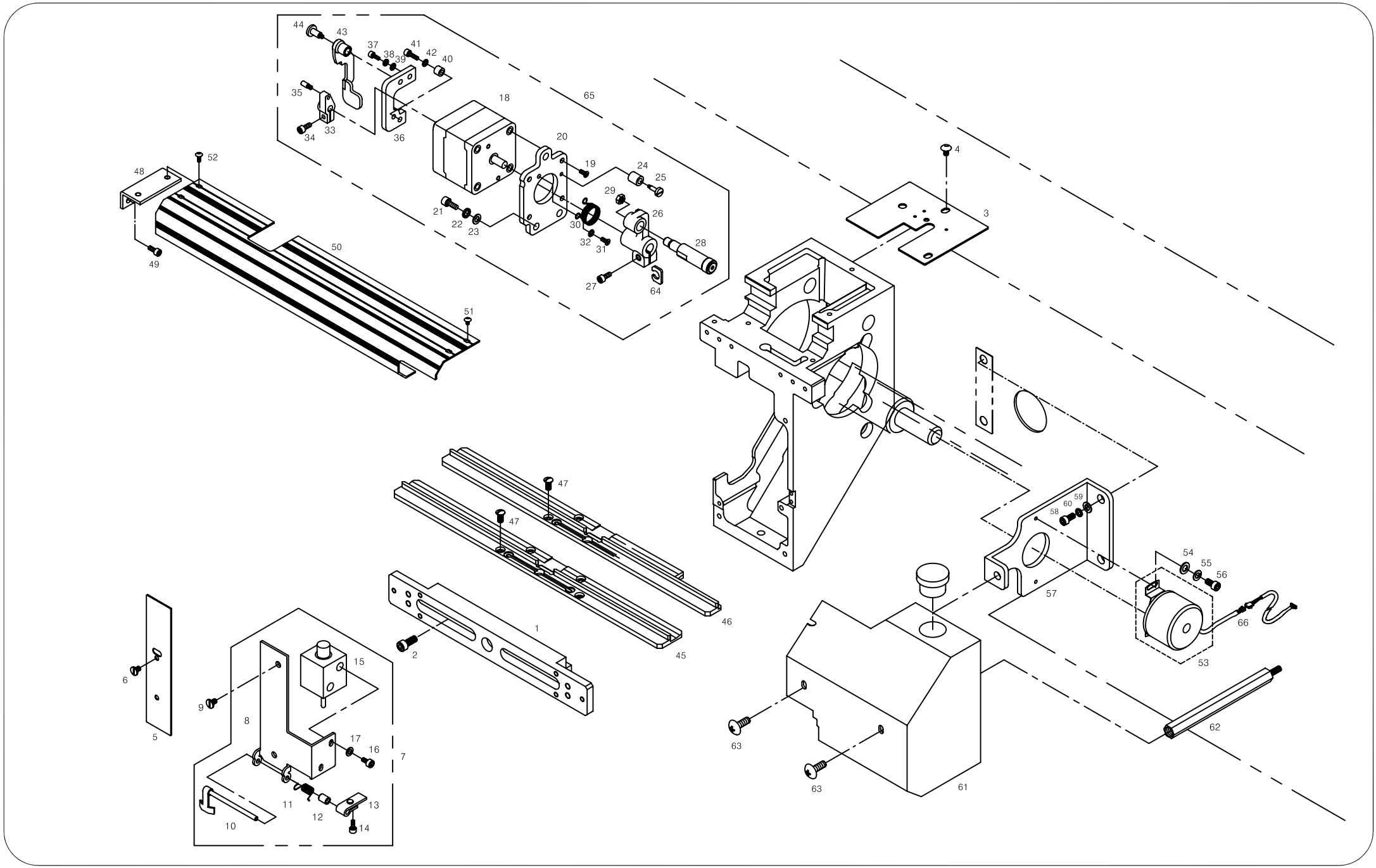
44
43
37
38
39
41
42
40
35
33
34
36
65
18
20
19
24
25
29
26
21
22
23
30
32
31
28
27
64
52
48
49
50
51
4
3
47
47
46
45
1
2
6
5
9
8
15
17
16
7
11
12
13
14
10
63
63
61
59
60
58
57
54
55
56
53
66
62

Ref.No	Part No.	Part Names		Q'ty
H1001	03068LM-BB00	Head L/M Guide Ass'y	UI1212	12
	03068LM-H003	Head L/M Guide Ass'y	UH1515	15
H1002	03071SC-A001	Hex.Scoket Bolt (M3*L15)		80
H1003	GP-007248-00	ARM TOP COVER		15
H1004	18033SC-3123	Truss Screw (M5*L6)		15
H1005	03008200H000	Arm Guard Plate "L" @20		15
H1006	03065SC-A001	Guard Plate Screw		60
H1007	AS-000858-00	UPPER THREAD HOLDING SET		15
H1008	03303800I000	Arm Guard Plate(R)		15
H1009	03065SC-A001	Guard Plate Screw		15
H1010	03304100I000	Thread Holding Lever Ass'y		15
H1011	03304200I000	Lever Spring		15
H1012	03304300I000	Lever Spring Bush.		15
H1013	03304400I000	Thread Holding Push Plate		15
H1014	07035SC-7113	Hex.Scoket Bolt (M3*L6)		15
H1015	10009EL-A002	UPPER THREAD CATCHER SOL.		15
H1016	05007SC-7113	Hex.Scoket Bolt (M3*L5)		30
H1017	06011SW-2111	Washer (@3)		30
H1018	03410200H000	Jump Motor		15
H1019	02002SC-7119	Pluss Screw (M4*L8)		60
H1020	03410100I000	Jump Motor Base		15
H1021	07016SC-7113	Hex.Scoket Bolt (M4*L10)		30
H1022	18014SW-3115	Spring Washer (@4)		30
H1023	06003SW-2111	Washer (@4)		30
H1024	03410300H000	Jump Crank Stopper		30
H1025	03411400H000	Stud for Jump Crank Stopper		15
H1026	GP-008769-00	Jump Driving Crank		15
H1027	05028SC-4113	HOLDER SCREW (9/64-L8)		15
H1028	03411810I000	Jump Crank Roller Ass'y		15
H1029	03031SN-A001	Pin. Nut (11/64,N=40)		15
H1030	03410800I000	Jump Retrun Spring		15
H1031	08006SC-8118	Plus Screw (M3*L5)		15
H1032	06011SW-2111	Washer (@3)		15
H1033	03410900H000	Jump Driving Clutch		15
H1034	02023SC-7113	Hex. Socket Bolt (M4*L8)		15
H1035	03411000H000	Jump Clutch Pin		15
H1036	03411100I000	Jump Clutch Base		15
H1037	22006SC-7113	Hex.Scoket Bolt (M3*L8)		15
H1038	11019SW-9115	Spring Washer (3@)		15
H1039	06011SW-2111	Washer (@3)		15

Ref. No	Part No.	Part Names		Q'ty
H1040	03304900H000	Jump Clutch Lever Stopper		15
H1041	04010MC-7113	Hex.Scoket Bolt (M4*L10)		15
H1042	06011SW-2111	Washer (@3)		15
H1043	03411200I000	Jump Driving Clutch Lever		15
H1044	03411300H000	Stud for Jump Clutch Lever		15
H1045	01300105U000	TAKE-UP GUIDE RAIL (L)	UH1515	1
	01300205U000	TAKE-UP GUIDE RAIL (M)	UH1515	12
	01400105U000	TAKE-UP GUIDE RAIL (R)	UH1515	1
	07025AD-AB00	TAKE-UP GUIDE RAIL	UI1212	11
H1046	03000200UHF0	Take-Up Guide Rail (M) L=399	UH1515	1
	03300614H000	Take-up Guade Rail (B)	UI1212	
H1047	05041SC-A001	Guide Rail Serew		60
H1048	12000510H000	Cover Bracket		1
H1049	02023SC-7113	Hex. Socket Bolt (M4*L8)		2
H1050	GP-009713-00	Top Shaft Cover "D" (L462.5)	UH1515	1
	GP-009714-00	Top Shaft Cover (D)	UI1212	
H1051	02009SC-A001	Side Cover Screw		2
H1052	18033SC-3123	Truss Screw (M5*L6)		2
H1053	03013EL-T121	ENCODER		1
H1054	06011SW-2111	Washer (@3)		2
H1055	08011SW-1111	Spring Washer (@3-S)		2
H1056	07035SC-7113	Bracket Screw (M3*L6)		2
H1057	GP-008536-00	Encoder Base		1
H1058	08076SC-7113	Hex. Socket Bolt (M5*L12)		4
H1059	16018SW-1111	Washer (@5)		2
H1060	18048SW-3115	Spring Washer (@5)		2
H1061	05000210H000	Encoder Cover		1
H1062	18036CW-UK06	Oil Tank Cover Support		1
H1063	02044SC-3123	Truss Screw (M5*L8)		2
H1064	08201100H000	PRESSER FOOT SPACER		15
H1065	AS-000861-00	JUMP SET		15
H1066	25103ET-B001	Encoder Connector		1

I

Color Change Set

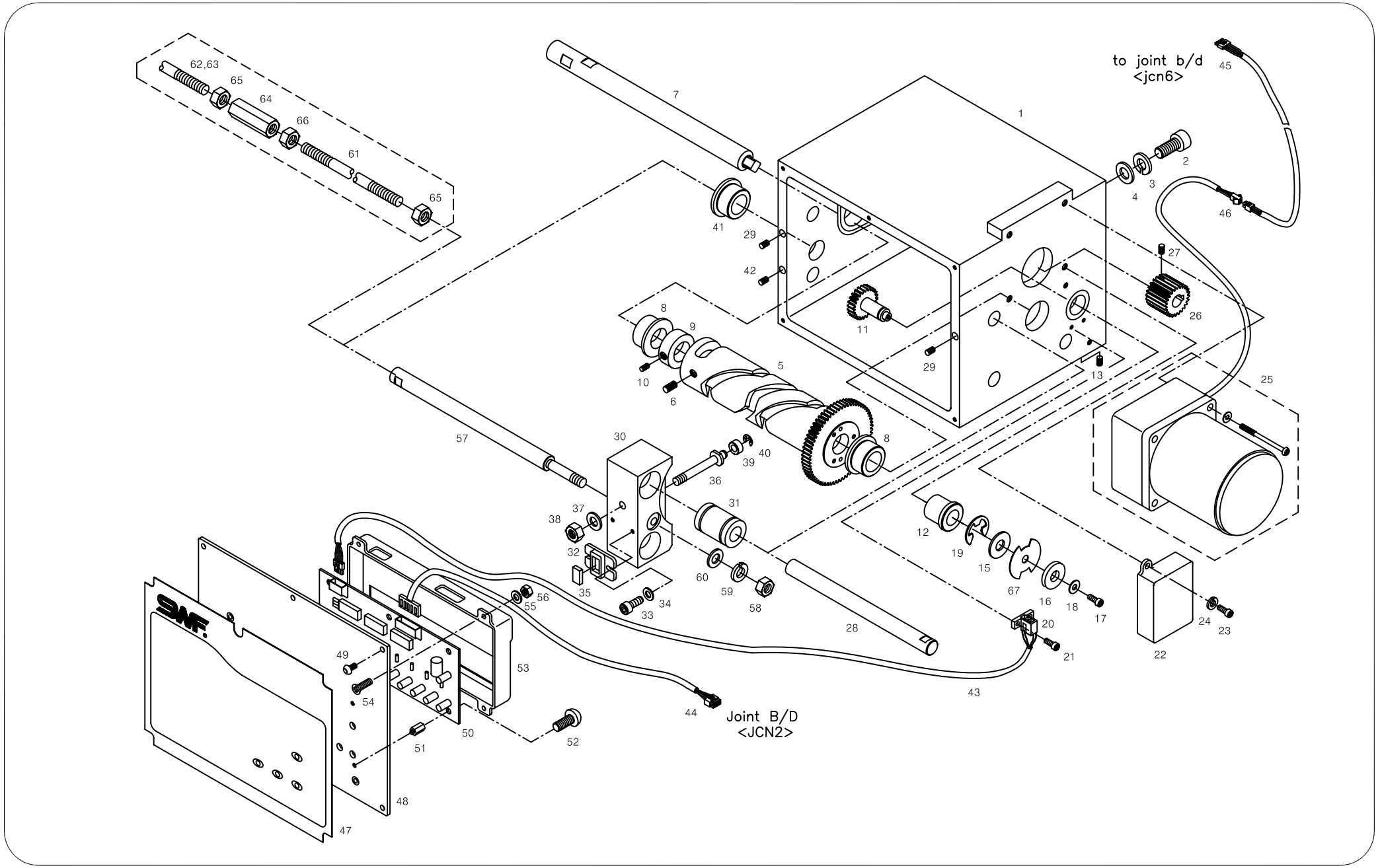

Ref.No	Part No.	Part Names		Q'ty
I-001	GP-005256-01	Color Change Box 15C	(UH1515)	1
	GP-005255-01	Color Change Box	(UI1212)	
I-002	03003SC-4113	Hex. Socket Bolt "B"(M8*L35)		4
I-003	15095SW-3115	Spring Washer (@8)		4
I-004	04029SW-A001	Stud Bolt Washer(S) (@8)		4
I-005	08110005B000	Color Change Cam Ass'Y	(UH1515)	1
	13006BM-AB00	Color Change Cam Ass'y	(UI1212)	
I-006	08037SC-4517	Hex. Socket Set Screw (M6*L10		2
I-007	08100305B000	Cam Shaft	(UH1515)	1
	13009SF-AB00	Cam Shaft	(UI1212)	
I-008	08101100B000	Cam Bushing		2
I-009	13012CW-A001	Cam Collar		1
I-010	04016AF-A001	Cam Collar Screw		2
I-011	13014GA-A001	Half Turn Gear		1
I-012	08101500B000	Half Turn Bushing		1
I-013	03020SC-A001	Drive Pin Screw 11/64,N40,L8		1
I-015	13018PR-A001	Half Turn Film Washer (T2.3)		1
I-016	13019PR-A001	Half Turm Film Washer (T1.0)		1
I-017	13020SC-A001	Hex.Socket Bolt(M3*L7)		1
I-018	06011SW-2111	Washer (@3)		1
I-019	08044SR-4013	E-Ring (@8)		1
I-020	08102300B000	Half Turn Sensor (Gp1S51V)		1
I-021	03071SC-A001	Hex.Scoket Bolt (M3*L15)		2
I-022	13025PM-A001	Sensor Cover		1
I-023	02015SC-7113	Hex.Socket Bolt(M4*L10)		2
I-024	08200601F000	Take-Up Lever Shaft 3C		2
I-025	13028MT-A001	Color Change Motor Unit		1
I-026	13029GA-A001	Motor Gear		1
I-027	13030SC-4517	Hex. Socket Set Screw (M4*L8)		1
I-028	08100405B000	Guide Shaft	(UH1515)	2
	13031SH-AB00	Guide Shaft	(UI1212)	1
I-029	03020SC-A001	Drive Pin Screw 11/64,N40,L8		2
I-030	13034AD-A001	Color Change Block		1
I-031	13035BR-A001	Guide Bushing		2
I-032	13036PR-A001	Magnet Holder		1
I-033	22006SC-7113	Hex. Socket Bolt (M3*L8)		1
I-034	06011SW-2111	Washer (@3)		1
I-035	10-027C-SC53	Magnet		1
I-036	13040CW-A001	Roller Shaft		1
I-037	08200301F000	Presser Foot (Afc)		1

Ref. No	Part No.	Part Names		Q'ty
I-038	13042SN-1111	Hex.Nut (M6*T5-R)		1
I-039	13043CW-A001	Roller		1
I-040	13044SR-4013	E-Ring (@4)		1
I-041	08101500B000	Half Turn Bushing		1
I-042	03020SC-A001	Drive Pin Screw 11/64,N40,L8		1
I-043	25073EL-A001	Half Turn Sensor Cable (25-73)		1
I-044	25015EL-A001	Color Change-Joint B/D (25-15)		1
I-045	25015EL-A001	Color Change-Joint B/D (25-15)		1
I-046	25101ET-B001	Color Change Connector		1
I-047	GP-009715-00	Membrance Switch	(UH1515)	1
	GP-009716-00	Membrance Switch	(UI1212)	
I-048	09100105B000	Membrane Switch Cover	(UH1515)	1
	13052PR-AB00	Membrance Switch Cover	(UI1212)	
I-049	13054SC-3123	Plus Screw (M3*L8)		5
I-050	15-001A-UIC0	Color Change Board Pcb	(UH1515)	1
	04-001A-SW60	Color Change Board PCB	(UI1212)	
I-051	13057SC-A001	Stud Bolt		6
I-052	06010SC-8118	Plus Screw (M3*L4)		6
I-053	09100205B000	Board Cover	(UH1515)	1
	13059ET-AB00	Board Cover	(UI1212)	
I-054	13061SC-8119	Plus Screw (M3*L10)		4
I-055	11019SW-9115	Spring Washer (3@)		4
I-056	05057SN-3211	Hex. Nut (M3-No2)		4
I-057	08000205B000	COLOR CHANGE SHAFT "A"(L286.2)	(UH1515)	1
	17054SH-AB00	COLOR CHANGE SHAFT "A" (L233.7)	(UI1212)	
I-058	13042SN-1111	Hex.Nut (M6*T5-R)		2
I-059	03026SW-9115	Spring Washer (@6)		1
I-060	03025SW-1211	Washer (@6)		1
I-061	17032SH-AC01	COLOR CHANGE SHAFT "B" (L1967)	(UH1515)	1
	14068SH-UI12	COLOR CHANGE SHAFT "C" (L1299)	(UI1212)	
I-062	17040SH-A001	MES DRIVING SHAFT "B"(L2000)	(UH1515)	1
	08000600UIC0	COLOR CHANGE SHAFT "D"(L2064)	(UI1212)	
I-063	17068SH-A004	COLOR CHANGE SHAFT "D"(L1915)	(UH1515)	1
	08000500UIC0	COLOR CHANGE SHAFT "B"(L1632)	(UI1212)	
I-064	17051SN-A001	Mes Priving Shaft Joint		2
I-065	13042SN-1111	Hex.Nut (M6*T5-R)		3
I-066	17053SN-1111	Hex. Nut(L) (M6*T5-L)		2
I-067	08101700B000	HALF TURN FLIM		1

J

Upper Thread Catcher Set

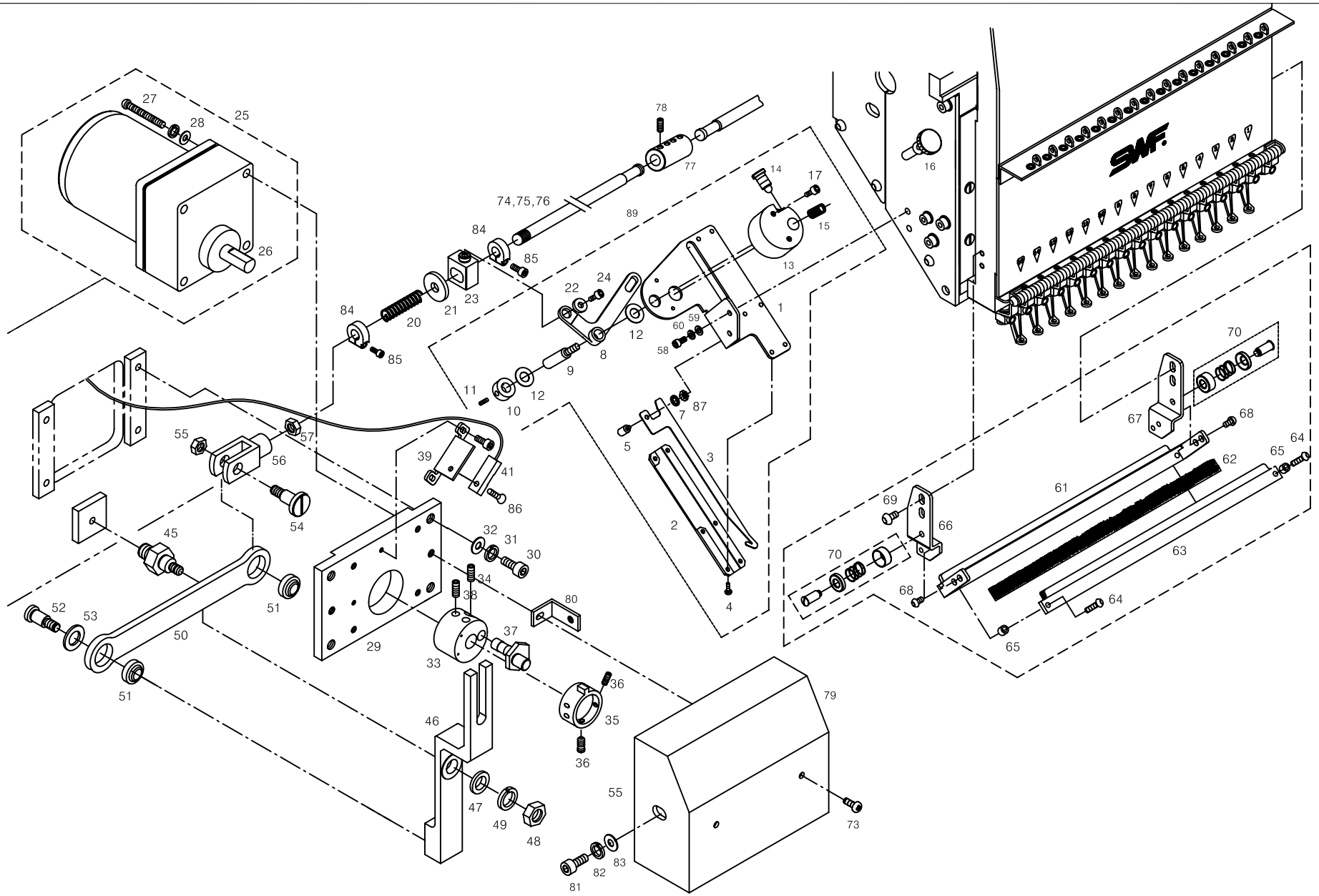

Ref.No	Part No.	PartNames	Q'ty
J-001	03500110H000	Upper Thread Catcher Base	15
J-002	03500210H000	Upper Thread Hook Base Cover	15
J-003	03500310H000	Upper Thread Hook	15
J-004	09005SC-3123	Truss Screw (M3*L6)	90
J-005	03500400H000	Upper Catcher Connect Pin	15
J-007	11019SW-9115	Spring Washer (3@)	15
J-008	03500500H000	Upper Catcher Driving Lever	15
J-009	03500600H000	Driving Lever Pin	15
J-010	03500700H000	Driving Lever Pin Collar	15
J-011	04014SC-4517	Hex.Socket Set Screw(M5*L5)	30
J-012	03500800H000	Driving Lever Pin Washer	30
J-013	03500900H000	Clutch Block	15
J-014	03501000H000	Clutch Stud Screw	15
J-015	03501100H000	Clutch Spring	15
J-016	03501200H000	Clutch Dial	15
J-017	11029SC-4113	Hex. Socket Bolt (M4*L20)	30
J-020	03002700H000	Return Spring	15
J-021	03002800H000	Return Spring Stopper Washer	15
J-022	03002900H000	Return Spring Fix Pin Washer	15
J-023	03003000H000	Return Spring Fix Pin	15
J-024	02015SC-7113	Hex.Socket Bolt(M4*L10)	15
J-025	03003100H000	Upper Thread Hook Motor Unit	1
J-026	03003100H000	Upper Thread Hook Motor Unit	1
J-029	03003210H000	Motor Base	1
J-030	06025MC-7113	Hex.Socket Bolt(M6*L25)	4
J-031	16014SW-4115	Spring Washer (@6)	4
J-032	08057SW-1111	Washer (@6)	4
J-033	03003300H000	Cam Shaft Fixing Block	1
J-034	05008MC-4517	Hex.Socket Bolt(M5*L8)	2
J-035	GP-005184-01	SENSOR SENSING ADJUSTING RING	1
J-036	04014SC-4517	Hex.Socket Set Screw(M5*L5)	2
J-037	03003500H000	Motor Driving Cam Shaft	1
J-038	04014SC-4517	Hex.Socket Set Screw(M5*L5)	1
J-039	GP-005180-00	UPPER THREAD HOOK SENSOR BASE	1
J-040	07035SC-7113	Bracket Screw (M3*L6)	2
J-041	15-027A-2070	SENSOR	1
J-045	03003800H000	Stud Bolt For Driving Plate	1
J-046	03003910H000	Upper Thread Driving Plate	1
J-047	03004000H000	Stud Bolt Washer	1
J-048	13042SN-1111	Hex.Nut (M6*T5-R)	1

Ref. No	Part No.	Part Names	Q'ty
J-049	16014SW-4115	Spring Washer (@6)	1
J-050	03004200HH00	Motor Driving Connect Plate	1
J-051	03004400H000	Motor Driving Connect Bearing	2
J-052	03008300H000	Connecting Plate Stud Screw A	1
J-053	03004500H000	Connecting Plate Pin Washer	1
J-054	03004700H000	Connecting Plate Stud Screw	1
J-055	13042SN-1111	Hex.Nut (M6*T5-R)	1
J-056	03004800H000	Connecting Plate Knuckle	1
J-057	04032SN-A001	Hex. Nut (M8-No2)	1
J-058	02023SC-7113	Hex.Socket Bolt (M4*L8)	30
J-059	18015SW-3111	Washer (4@)	30
J-060	18014SW-3115	Spring Washer (@4-No2)	30
J-061	09052PR-T151	Upper Thread Presser Base	15
	09052PR-T151	Upper Thread Presser Base	
J-062	09027ET-T151	Velcro (15,C) (15C)	30
	09027ET-AB00	Velcro (12C)	2/H
J-063	09029PR-T151	Presser Base Cover 15 (15C)	15
	09029PR-AB00	Presser Base Cover (12C)	1/H
J-064	07018SC-8118	Plus Screw (M3*L8)	30
J-065	09038CW-A001	Thread Presser Space	30
J-066	09040PR-A001	Bracket (L)	15
J-067	09041PR-A001	Bracket (R)	15
J-068	06010SC-8118	Plus Screw (M3*L4)	60
J-069	02009SC-A001	Side Cover Screw	60
J-070	09044PR-A001	Upper Thread Holder Disk Set	30
J-073	02010AF-3123	Truss Screw (M4*L8)	2
J-074	03007000HEK0	Upper Thread Driving Shaft A	1
J-075	03007100HEK0	Upper Thread Driving Shaft B	1
J-076	03007200HEI0	Upper Thread Driving Shaft C	1
J-077	03007300H000	Upper Thread Shaft Coupling	2
J-078	08113SC-A001	Collar Screw	8
J-079	12001910H000	Upper Thread Hook Motor Cover	1
J-080	03008600H000	Motor Cover Fixing Bracket	2
J-081	02023SC-7113	Hex.Socket Bolt (M4*L8)	2
J-082	18014SW-3115	Spring Washer (@4-No2)	2
J-083	18015SW-3111	Washer (4@)	2
J-084	03002610H000	Return Spring Stopper	30
J-085	05008SC-4113	Hex.Socket Bolt (M4*L16)	30
J-086	13061SC-8119	Plus Screw (M3*L10)	1
J-087	11014SN-1211	Hex.Nut (M3-No2)	15

J

Upper Thread Catcher Set

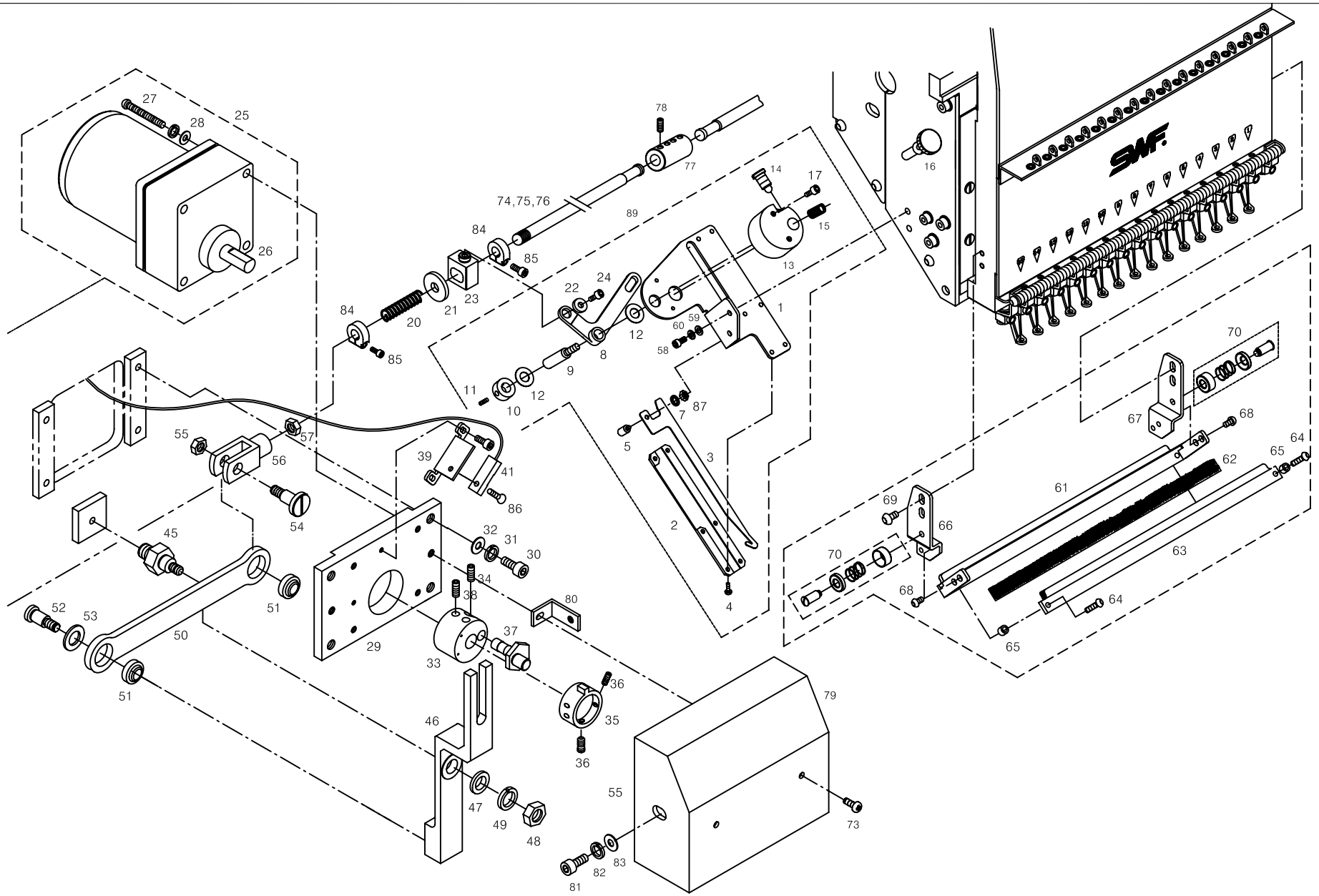

Ref. No	Part No.	Part Names	Q'ty
J-088	08600005B000	Upper Thread Presser Set 15C	15
	08600004B000	Upper Thread Presser Set 12C	12
J-089	08500000H000	UPPER THREAD CATCHER SET	15

Ref. No	Part No.	Part Names	Q'ty

K

Head

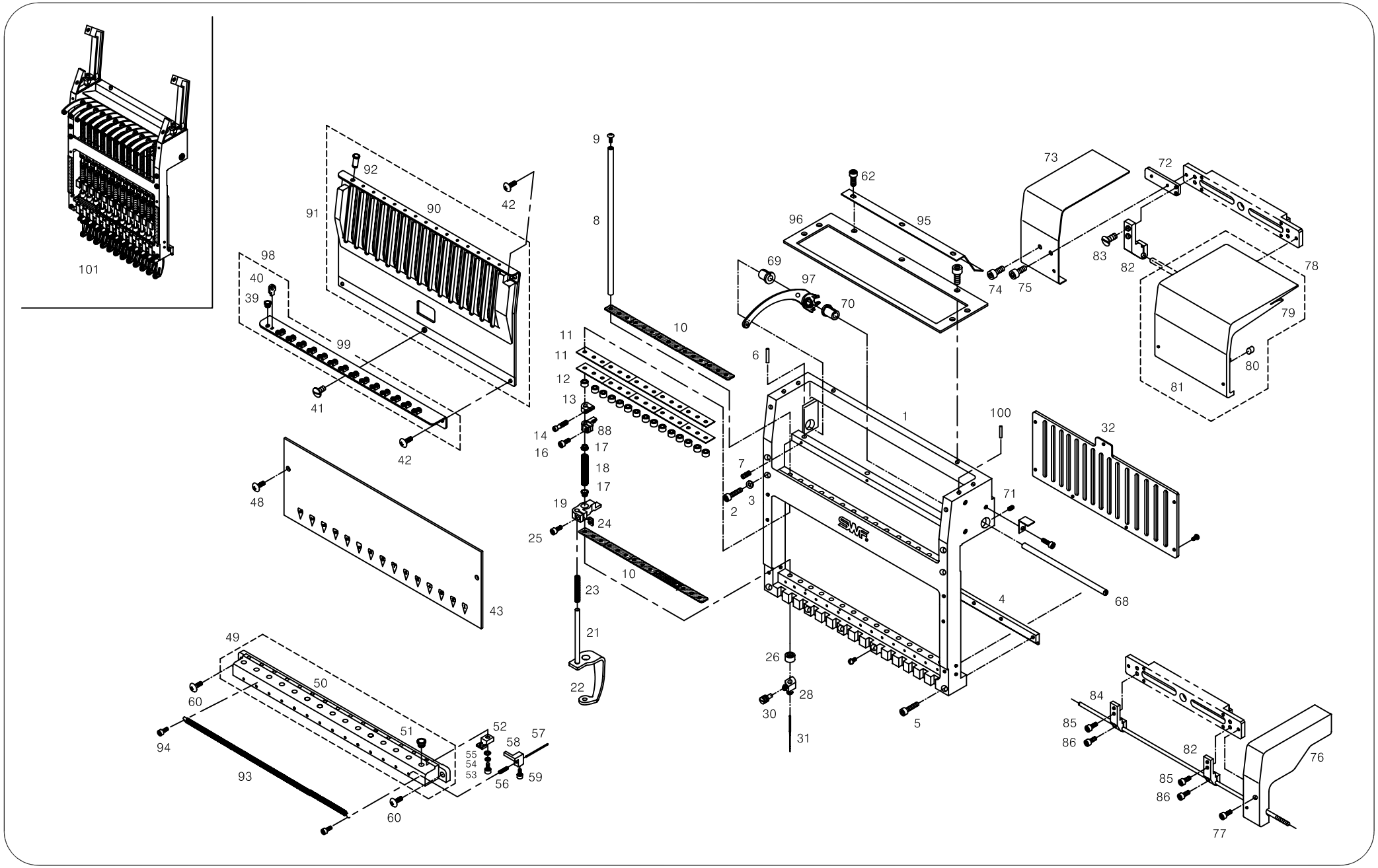
101
92
91
90
42
98
40
39
99
41
42
48
43
9
8
10
11
11
12
13
14
88
16
17
18
17
19
24
25
10
23
21
22
62
96
95
73
72
69
97
70
74
75
83
82
78
79
80
81
6
1
100
32
7
3
2
71
68
4
26
28
30
31
5
49
50
60
94
93
51
52
58
57
55
54
53
56
59
60
84
85
86
82
85
86
76
77

Ref.No	Part No.	PartNames		Q'ty
K-001	08200105U000	Head 15C (Tubular)		15
	08200114H000	Head	UI1212	12
K-002	05008SC-4113	Hex.Socket Bolt (M4*L16)		60
K-003	06003SW-2111	Washer (@4)		60
K-004	08201305H000	Head Rail 15C		15
	08201304H000	Head Rail	UI1212	12
K-005	05014SC-7113	Hex. Socket Bolt (M4*L25)		60
K-006	05015CW-A001	Head Base Pin(@5*L15)		30
K-007	03022SC-4517	Hex. Socket Set Screw(M4*L5)		30
K-008	05018CW-A001	Needle Bar		225
K-009	05019SC-A001	Needle Bar Cover Screw (M5*L6)		225
K-010	08200700H000	Needle Bar Felt		225
K-011	05023RB-A001	Needle Bar Cushion Rubber "A"		225
K-012	05024RB-A001	Needle Bar Cushion Rubber "B"		225
K-013	11101200T000	Upper Dead Point Stopper		225
K-014	05026SC-4113	Stopper Screw (9/64-11.5)		225
K-016	05028SC-4113	Holder Screw (9/64-L8)		225
K-017	05021PM-H001	Presser Foot Spring Guide		450
K-018	08200800H000	Needle Bar Return Spring		225
K-019	08200900H000	Presser Foot Holder (Set) Hb		225
K-020	08200510H000	Presser Foot (Hight Speed)		225
K-023	08201000H000	Presser Foot Return Spring		225
K-024	08201100H000	Presser Foot Spacer		225
K-025	05026SC-H001	Presser Foot Holder Screw		225
K-026	08201200H000	Presser Foot Cushion Rubber A		225
K-028	05036CW-A001	Needle Fixed Holder		225
K-030	05363SC-A001	Needle Fixed Screw (A/S)		225
K-031	05037DB-A001	Needle (Db-K5, #11)		225
K-032	05038PM-H003	Needle Bar Guide Rail (15C)		15
	05038PM-AB00	Heedle Bar Guide Rail	UI1212	12
K-039	05452CM-A001	Eyelet "A"		225
K-040	05483CM-A001	Eyelet "B"		225
K-041	05062SC-A001	Thread Guide (L) Screw		15
K-042	05070SC-3123	Head Face Plate (U) Screw		60
K-043	12001705H000	Head Face Plate (L) (15C)		15
K-048	05070SC-3123	Head Face Plate (U) Screw		30
	12001704H000	Head Face Plate (L)	UI1212	1/H
K-049	10900015H000	Upper Thread Holder Apron Set		15
	10900014H000	Upper Thread Holder Apron : Set	UI1212	12
K-050	10900105H000	Upper Thread Holder Apron 15C		15
	10900104H000	Upper Thread Holder Apron	UI1212	12

Ref. No	Part No.	Part Names		Q'ty
K-051	05452CM-A001	Eyelet "A"		225
K-052	10900200H000	Upper Thread Holder Block		225
K-053	03010MC-4135	Holder Block Screw		225
K-054	11019SW-9115	Spring Washer (3@)		225
K-055	06011SW-2111	Washer (@3)		225
K-056	10900300H000	Upper Thread Holder Spring		225
K-057	10900400H000	Upper Thread Holder Pin		225
K-058	10900500H000	Upper Thread Holder Clamp		225
K-059	03006MC-4535	Thread Holder Clamp Screw		225
K-060	05070SC-3123	Head Face Plate (U) Screw		225
K-062	02023SC-7113	Hex. Socket Bolt (M4*L8)		30
K-068	07004SF-T151	Take-Up Lever Shaft 15C		15
	08200404A000	Take-Up Leaver Shaft	UI1212	12
K-069	08203000A000	Take-Up Lever Shaft Bush(L)		15
K-070	08200800A000	Take-Up Lever Shaft Bush(R)		15
K-071	07009SC-4517	Hex.Socket Set Screw (M5*L6)		30
K-072	02011PR-A001	Top Shaft Cover (L) Bracket		1
K-073	AS-001503-00	TOP SHAFT COVER(L)SET		1
K-074	02014SC-7113	Hex. Socket Bolt (M4*L5)		1
K-075	02015SC-7113	Hex.Socket Bolt(M4*L10)		1
K-076	AS-001504-00	TOP SHAFT COVER(R)SET		1
K-077	02014SC-7113	Hex. Socket Bolt (M4*L5)		14
K-078	02019PM-AF01	Top Shaft Cover "A" (L191)		8
K-080	02023ET-A001	Top Shaft Cover Magnet		29
K-081	02023ET-A001	Top Shaft Cover Magnet		29
K-082	08004700A000	Color Change Bracket "A"		1
K-083	13048SC-A001	Bracket "A" Screw		2
K-084	08004900A000	Color Change Bracket "B"		29
K-085	02031SC-7113	Hex. Socket Screw(M5*L10)		58
K-086	02015SC-7113	Hex.Socket Bolt(M4*L10)		30
K-088	08201400H000	Needle Bar Holder		225
K-089	10200105B000	Head Face Plate (U) 15C		15
K-090	10200104B000	Head Face Plate (U)	UI1212	12
K-091	10200015H000	Thread Guide (U) Set 15C		15
	10200014H000	Thread Guide (U) Set	UI1212	12
K-092	10200100H000	Eyelet "A-1"		225
K-093	10800505H000	THREAD GUIDE SPRING 15C		15
K-094	03004MC-7113	HEX. SOCKET BOLT (M3*L4)		30
K-095	11046PR-H003	CABLE SUPPORT PLATE 15C		15
K-096	08000135H000	OIL PROTECTING COVER	(UH1515)	15
	08000134H000	OIL PROTECTING COVER	(UI1212)	12

K

Head

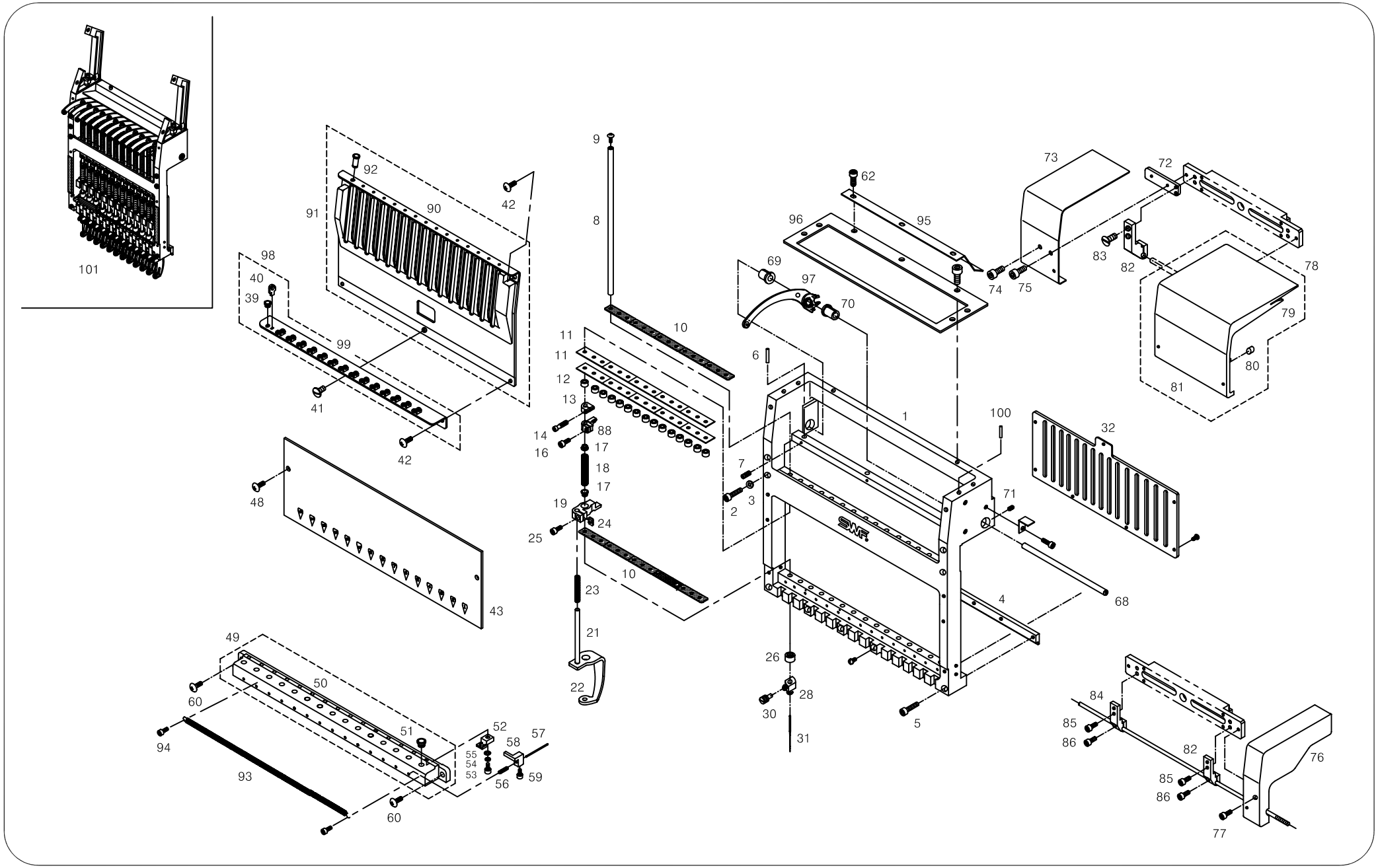
101
92
91
90
42
98
40
39
99
41
42
48
43
9
8
10
11
11
12
13
14
88
16
17
18
17
19
24
25
10
23
21
22
62
96
95
73
72
69
97
70
74
75
83
82
78
79
80
81
6
1
100
32
7
3
2
71
68
4
26
28
30
31
5
49
50
60
94
93
51
52
58
57
55
54
53
56
59
60
84
85
86
82
85
86
76
77

Ref. No	Part No.	Part Names		Q'ty
K-097	07005BM-B002	TAKE-UP LEVER SET		225
K-098	10300005A000	Thread Guide (M) Set	(UH1515)	15
	10300004A000	Thread Guide (M) Set	(UI1212)	12
K-099	10300115A000	Thread Guide (M)	(UH1515)	15
	10300114A000	Thread Guide (M)	(UI1212)	12
K-100	01303700H000	TENSION PLATE PIN		30
K-101	08200015U000	HEAD SET	(UH1515)	15
	08200014U000	HEAD SET	(UI1212)	12

Ref. No	Part No.	Part Names	Q'ty

L

Thread Tension Unit

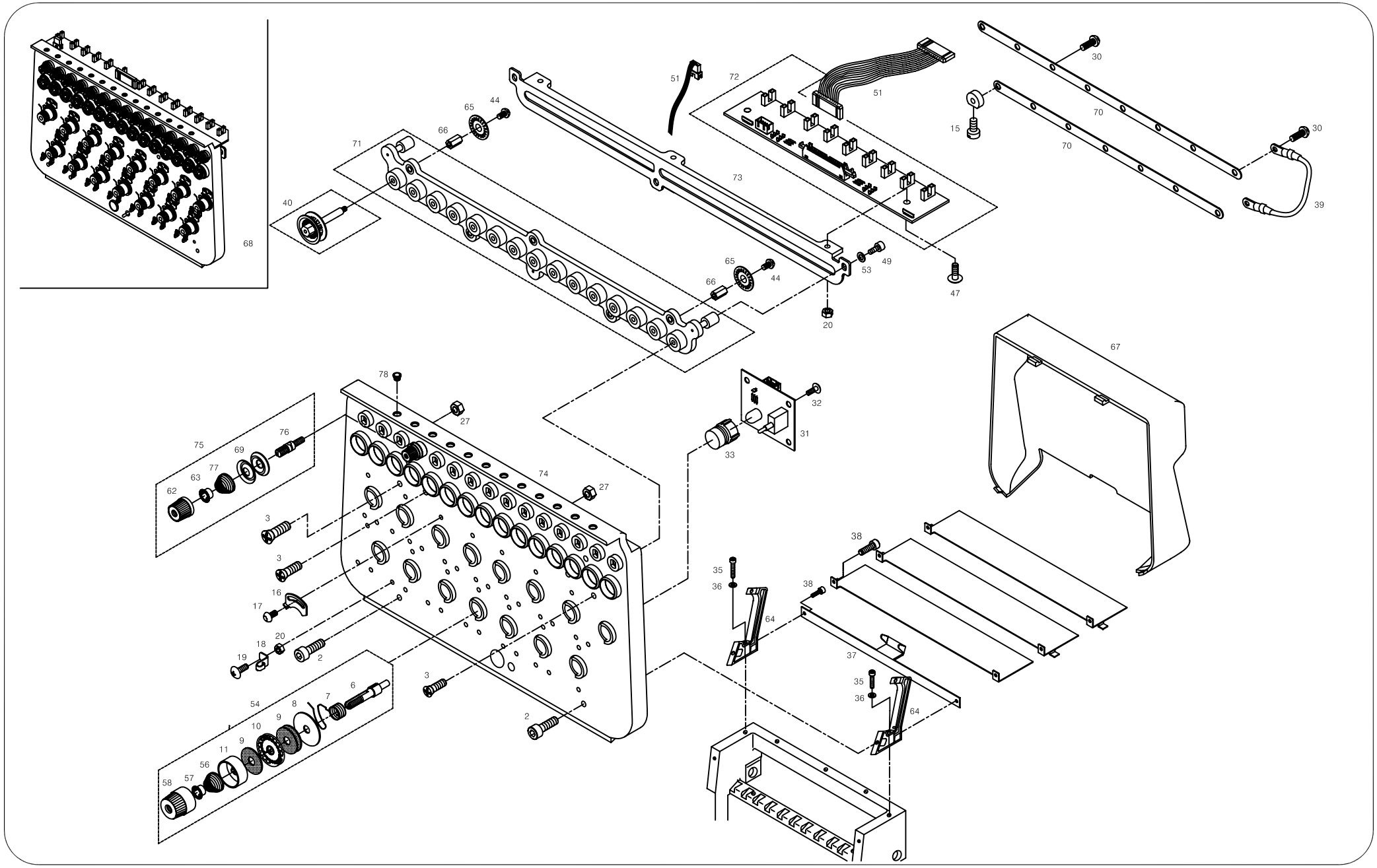

Ref. No	Part No.	Part Names	Q'ty
L-002	15089SC-7119	C.S Screw (M4*L10)	30
L-003	04010MC-7113	Hex.Socket Bolt (M4*L10)	30
L-006	11081CW-A001	THREAD TENSION ADJUSTING STUD	225
L-007	11082AF-A001	Thread Take-Up Spring	225
L-008	11083PM-A001	Disc Plate	225
L-009	11084AF-A001	Felt	675
L-010	11085AF-A001	Rotary Tension Disc	225
L-011	11086PM-A001	Tension Spring Collar	225
L-015	11009SC-A001	Stud Screw	225
L-016	11009PR-B001	Thread Breakage Detecting Plat	225
L-017	09005SC-3123	Truss Screw (M3*L6)	225
L-018	11012PR-B001	Thread Guide (New)	675
L-019	09005SC-3123	Truss Screw (M3*L6)	675
L-020	11014SN-1211	Hex.Nut (M3-No2)	675
L-027	03031SN-A001	Pin. Nut (11/64,N=40)	225
L-030	09005SC-3123	Truss Screw (M3*L6)	225
L-031	02-0000-EMB1	Head On/Off S/W Board 9C,15C	15
L-032	09005SC-3123	Truss Screw (M3*L6)	60
L-033	08300400A000	Lamp Cover	15
L-035	11021SC-4113	Hex. Socket Bolt (M4*L35)	30
L-036	18015SW-3111	Washer (4@)	30
L-037	08000105UHF0	COVER SUPPORT PLATE	13
	08000205UHF0	COVER SUPPORT PLATE (L)	1
	08000305UHF0	COVER SUPPORT PLATE (R)	1
L-038	02023SC-7113	Hex. Socket Bolt (M4*L8)	30
L-039	25124EL-B001	Wheel Earth 15C	15
	02103903H000	Wheel Earth 6,9,12C UI1212	1/H
L-040	11075PM-B001	Thread Sensor Roller(B1)Set	225
L-042	02002SC-7119	Pluss Screw (M4*L8)	75
L-044	08011SC-8118	Screw (M2*L4)	225
L-047	02010SC-3123	Truss Screw (M4*L8)	45
L-049	02023SC-7113	Hex.Socket Bolt (M4*L8)	45
L-051	02101800B000	Plate Led S/W Board Cable	15
L-053	06003SW-2111	Washer (@4)	45
L-054	08310000B000	TENSION ADJUSTING SET	225
L-056	08300800A000	TENSION ADJUSTING SPRING	225
L-057	08300700A000	TENSION SPRING STOPPER	225
L-058	08300500A000	TENSION ADJUSTING NUT	225
L-062	08300600A000	SUB TENSION ADJUSTING NUT(A)	225
L-063	11088PM-A001	TENSION SPRING STOPPER	225

Ref. No	Part No.	Part Names	Q'ty
L-064	11020PM-B001	TENSION PLATE HOLDER (UH1515)	30
	08202000A000	TENSION PLATE HOLDER (UI1212)	24
L-065	GP-005179-00	THREAD BREAKAGE DETECTING WHEEL	225
L-066	11083CW-B001	Thread Detecting Wheel Stud (UH1515)	225
	08308300B000	Thread Detecting Wheel Stud (UI1212)	
L-067	06004PM-UK14	TENSION PLATE COVER 15C	15
L-068	083000041000	TENSINO UNIT SET (UI1212)	12
	083000051000	TENSINO UNIT SET (UH1515)	15
L-069	083012001000	TENSION DISC	225
L-070	083003041000	CONNECTION PLATE (UI1212)	24
	083003051000	CONNECTION PLATE "A" (UH1515)	15
	083004051000	CONNECTION PLATE "B" (UH1515)	15
L-071	083007041000	ROLLER BASE (UI1212)	12
	083007051000	ROLLER BASE (UH1515)	15
L-072	20009EL-WH12	WHEEL SENSOR BOARD (UI1212)	12
	20009EL-WH15	WHEEL SENSOR BOARD (UH1515)	15
L-073	083002041000	BOARD BASE (UI1212)	12
	083002051000	BOARD BASE (UH1515)	15
L-074	083001041000	TENSION UNIT PLATE (UI1212)	12
	083001051000	TENSION UNIT PLATE (UH1515)	15
L-075	083200001000	SUB TENSION ADJUSTING SET	225
L-076	083010001000	TENSION ADJUSTING STUD	225
L-077	083011001000	TENSION SPRING	225
L-078	05452CM-A001	EYELET "A"	225

M

Sub-Control

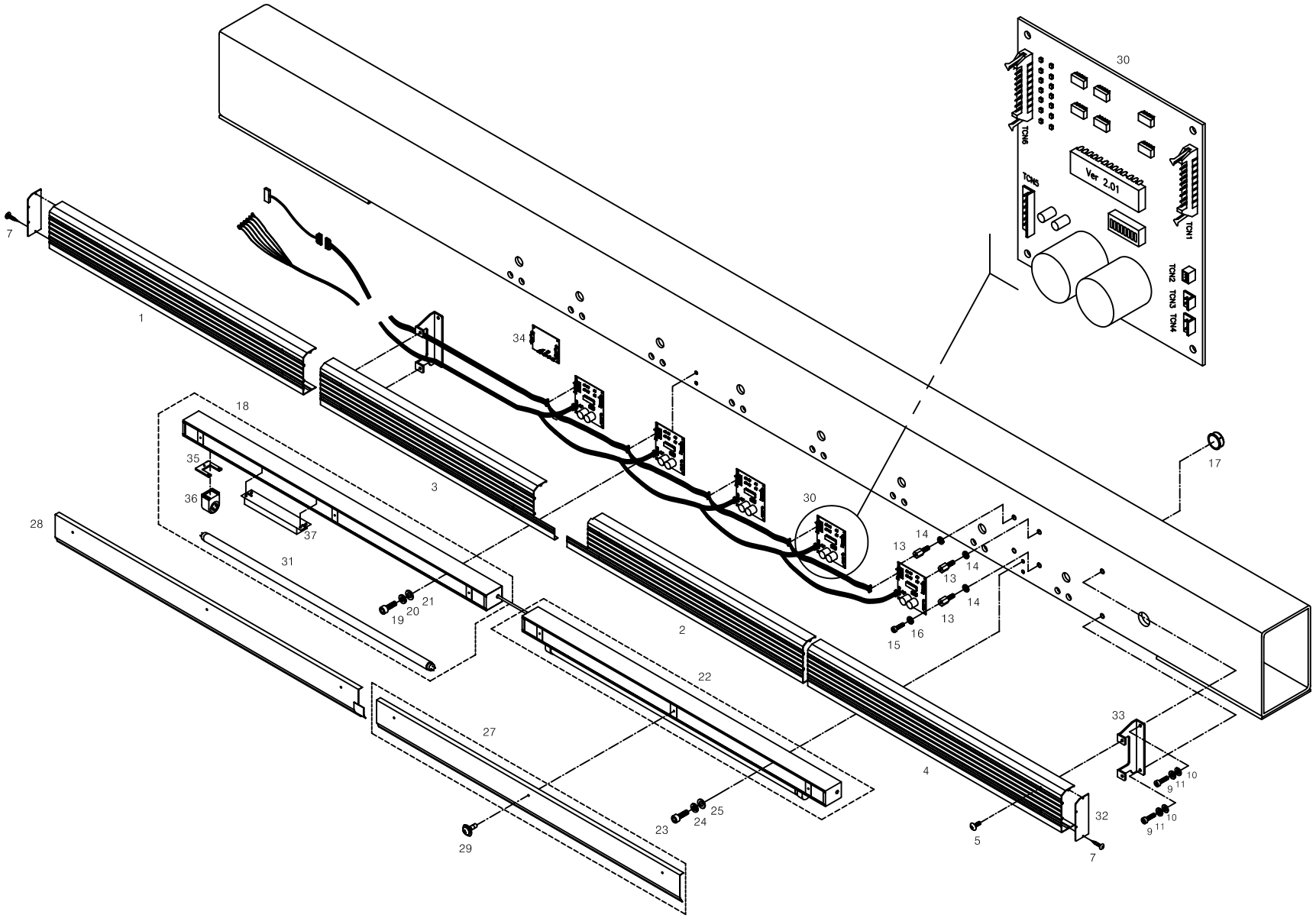

Ref.No	Part No.	PartNames		Q'ty
M-001	12001300UHF0	Cable Cover "A" (L=2295)	UH1515	1
	12001300UIC0	Cable Cover "A" (L=1298)	UH1212	
M-002	12001400UHF0	Cable Cover "B" (L=614.5)	UH1515	1
	12001400UIC0	Cable Cover "B" (L=1440)	UH1212	
M-003	12001500UHF0	Cable Cover "C" (L=1808.5)	UH1515	1
	12001500UIC0	Cable Cover "C" (L=1534)	UH1212	
M-004	02061AD-AE00	Cable Cover (L=1679)	UH1515	1
	12001600UIC0	Cable Cover "D" (L=1433.5)	UH1212	
M-005	02044SC-3123	Truss Screw (M5*L8)		16
M-007	02065SC-3328	Tapping Screw (M3*L10)		8
M-009	08076SC-7113	Hex. Socket Bolt (M5*L12)		16
M-010	16018SW-1111	Washer (@5)		16
M-011	18048SW-3115	Spring Washer (@5)		16
M-013	11049SC-A001	Board Stud Bolt		60
M-014	18048SW-3115	Spring Washer (@5)		60
M-015	18154SC-9134	PLUS SCREW (M3*L8)		60
M-016	11019SW-9115	Spring Washer (3@)		60
M-017	02017PM-A001	Cable Ring		30
M-018	AS-001185-00	Lamp Ass,Y "A"		2
M-019	02031SC-7113	Hex. Socket Screw(M5*L10)		8
M-020	18048SW-3115	Spring Washer (@5)		8
M-021	16018SW-1111	Washer (@5)		8
M-022	AS-001186-00	Lamp Ass,Y "B"		2
M-023	02031SC-7113	Hex. Socket Screw(M5*L10)		8
M-024	18048SW-3115	Spring Washer (@5)		8
M-025	16018SW-1111	Washer (@5)		8
M-027	20011PR-A001	Reflecting		2
M-028	20009PR-A001	Reflecting		2
M-029	22025SC-9134	Screw (M4*L10)		24
M-030	11093EL-C001	SUB-CONTROL BOARD NC-THS2.3		15
M-031	20009EL-B001	LAMP (32W)		4
M-032	12000200B000	CABLE COVER PLATE		2
M-033	02000400B000	CABLE COVER HOLDER		8
M-034	04-0000-SW71	THREAD CONTROL JOINT BOARD		1
M-035	GP-009003-00	Lamp Socket Fixed Plate		3
M-036	20014ET-A001	Lamp Socket		3
M-037	09000900B000	Ballast		1

Ref. No	Part No.	Part Names	Q'ty

N

X-Axis Drive System

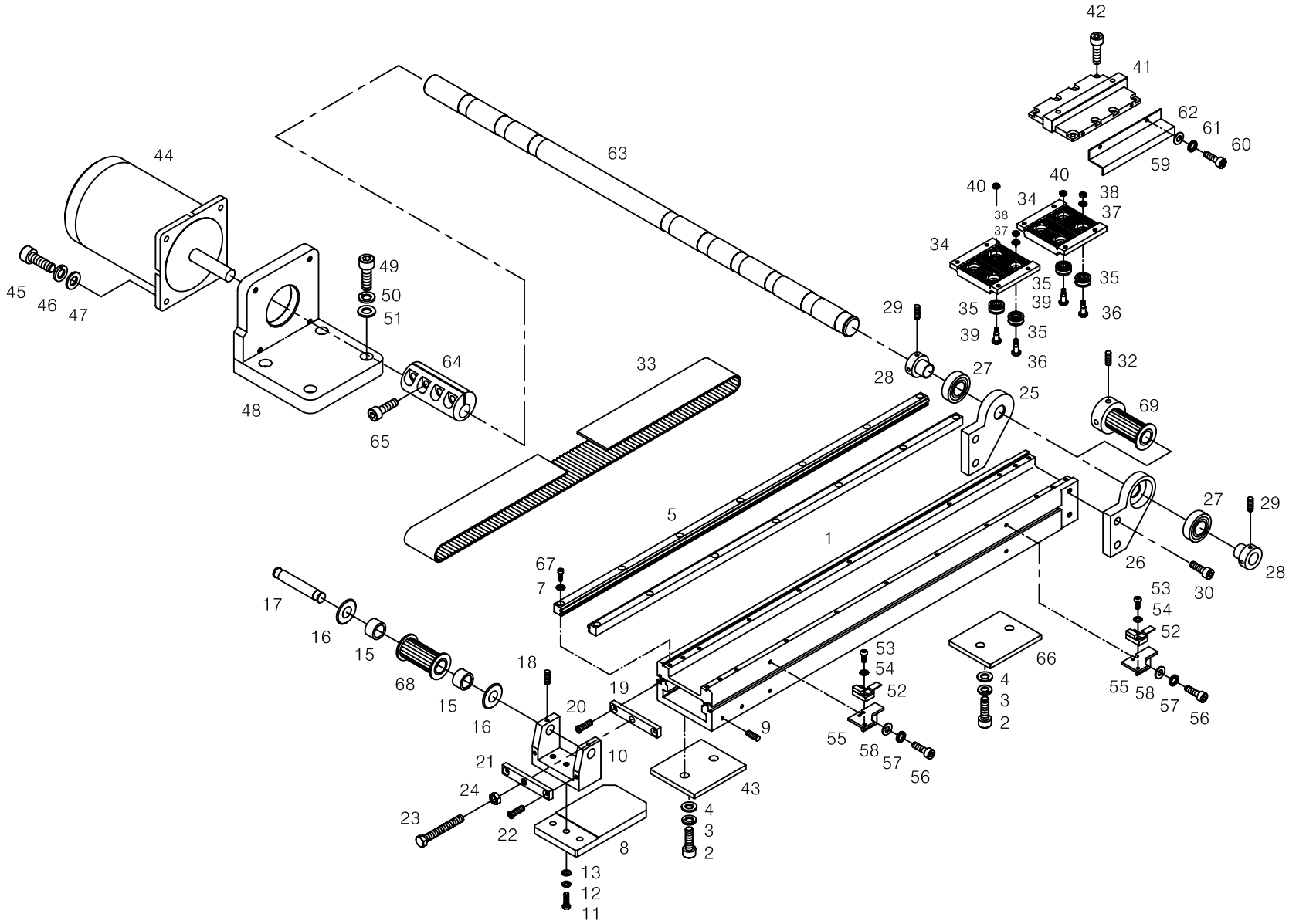

Ref.No	Part No.	Part Names	Q'ty
N-001	04100100TH00	X-Cam Roller Guide Bracketr	3
N-002	15019SC-4113	Hex. Socket Bolt (M8*L40)	12
N-003	15095SW-3115	Spring Washer (@8)	12
N-004	04029SW-A001	Stud Bolt Washer(S) (@8)	12
N-005	04100200TH00	X-Cam Roller Guide Rail Th1215	6
N-007	18014SW-3115	Spring Washer (@4-No2)	36
N-008	04202400B000	Timing Pulley Tension Base(N)	3
N-009	14060AF-4517	Hex.Socket Screw(M6*L6)	12
N-011	15028SC-1111	Hex. Bolt (M6*L20)	9
N-012	16014SW-4115	Spring Washer (@6)	9
N-013	08057SW-1111	Washer (@6)	9
N-015	15042BR-A001	Needle Bearing (1210Zz)	6
N-016	15046RB-A001	Driving Pin Washer (Tw1225)	6
N-017	04104400B000	Timing Pulley Driving Pin	3
N-018	03022SC-4517	Hex. Socket Set Screw(M4*L5)	6
N-019	15055PR-A001	Tension Rivet Plate (W) W:48	3
N-020	15089SC-7119	C.S Screw (M4*L12)	6
N-021	15056PR-A001	Tension Plate (W) (Belt:48)	3
N-022	15089SC-7119	C.S Screw (M4*L12)	6
N-023	15058SC-1211	Hex. Bolt (M6*L58)	3
N-024	14064SN-7311	Hex.Nut (M6-No3)	3
N-025	04103100B000	Timing Pulley Bracket (L)	3
N-026	04103200B000	Timing Pulley Bracket (R)	3
N-027	14065BR-A001	Needle Bearing (Nk18/16A)	6
N-028	04003500B000	Needle Bearing Collar	6
N-029	04014SC-4517	Hex.Socket Set Screw(M5*L5)	12
N-030	14002SC-7113	Hex.Socket Bolt (M6*L15)	12
N-032	14060AF-4517	Hex.Socket Screw(M6*L6)	12
N-033	04000100TH00	X-Drive Timing Belt L1205	3
N-034	16103CL-H001	Belt Catcher Plate (X,Y)	6
N-035	15001BR-B001	Cam Roller Baearing	24
N-036	15002CW-B001	Cam Roller Stud (A)	12
N-037	18014SW-3115	Spring Washer (@4-No2)	12
N-038	15029SN-3211	Hex. Nut (M4-No2)	12
N-039	15003CW-B001	Cam Roller Stud (B)	12
N-040	12010SN-1211	Hex.Nut (M5)	12
N-041	04000200TH00	X - Moving Plate Th1215	3
N-042	02023SC-7113	Hex.Socket Bolt (M4*L8)	24
N-043	04000300TH00	X-Camroller Guide Spacer	6
N-044	15027MT-UI12	X Driving Motor(103H89223-5243	1

Ref. No	Part No.	Part Names	Q'ty
N-045	14046SC-7113	Hex.Socket Bolt (M6*L30)	4
N-046	16014SW-4115	Spring Washer (@6)	4
N-047	08057SW-1111	Washer (@6)	4
N-048	15028CA-UI12	X-Axis Motor Bracket	1
N-049	14027SC-4113	Hex.Socket Bolt (M8*L30)	4
N-050	15095SW-3115	Spring Washer (@8)	4
N-051	04029SW-A001	Stud Bolt Washer(S) (@8)	4
N-052	15046EL-CT01	Xy-Sensor Assy	2
N-053	15115SC-8118	Plus Screw (M3*L12)	2
N-054	18014SW-3115	Spring Washer (@4-No2)	2
N-055	04002100TH00	Sensor Bracket (X,Y) Th1215	2
N-056	15120SC-A001	Position Adjusting Screw	4
N-057	06011SW-2111	Washer (@3)	4
N-058	15121PR-A001	Square Washer	4
N-059	04002200TH00	Sensor Perecption Plate Th1215	1
N-060	22006SC-7113	Hex. Socket Bolt (M3*L8)	2
N-061	11019SW-9115	Spring Washer (3@)	2
N-062	06011SW-2111	Washer (@3)	2
N-063	GP-009091-00	X-Driving Shaft (@15,L1245)	1
N-064	03003800B000	Coupling	1
N-065	08091SC-7113	Hex. Socket Bolt (M6*L20)	4
N-066	04000100UHF0	X-CAMROLLER GUIDE B/K SPACER A	3
N-067	04016MC-4113	CAM ROLLER GUIDE FIXED SCREW	36
N-068	04002600H000	TIMING PULLEY(16-S5M-32F)	3
N-069	04002700H000	TIMING PULLEY(16-S5M-32F)	3

Y-Axis Drive System I

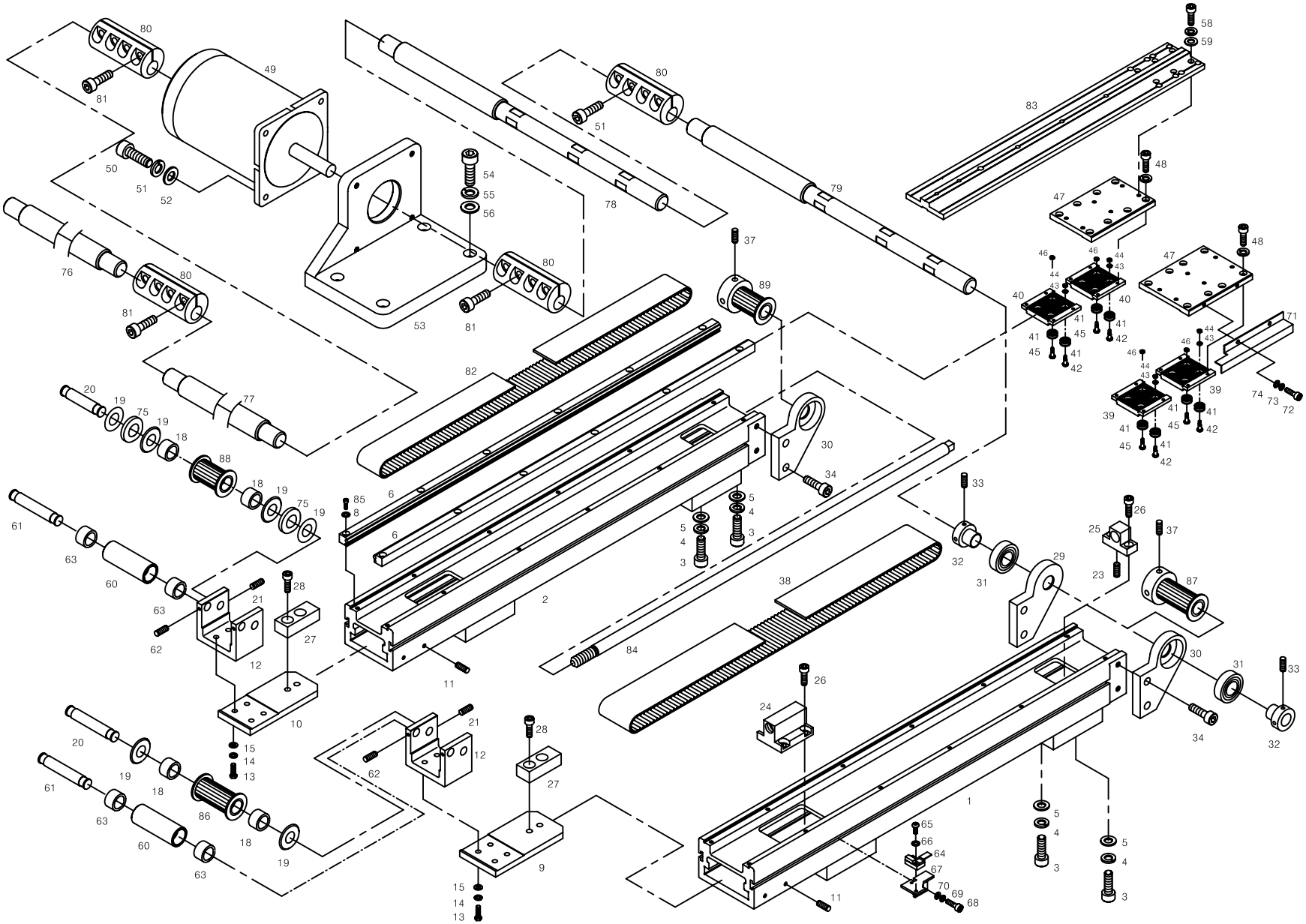

Ref.No	Part No.	Part Names	Q'ty
O-001	GP-008731-01	Y Cam Roller Guide Bracket A	2
O-002	GP-008732-01	Y Cam Roller Guide Bracket B	2
O-003	15019SC-4113	Hex. Socket Bolt (M8*L40)	16
O-004	15095SW-3115	Spring Washer (@8)	16
O-005	04029SW-A001	Stud Bolt Washer(S) (@8)	16
O-006	GP-008733-01	Y Cam Roller Guide Rail L=575	8
O-008	18014SW-3115	Spring Washer (@4-No2)	56
O-009	04200300TH00	Timing Pulley Tension Base Double breadth)	2
O-010	04300300TH00	Timing Pulley Tension Base (Single breadth)	2
O-011	14060AF-4517	Hex.Socket Screw(M6*L6)	16
O-012	04200400TH00	Pulley Bracket (C) Y	4
O-013	15028SC-1111	Hex. Bolt (M6*L20)	16
O-014	03026SW-9115	Spring Washer (@6)	16
O-015	08057SW-1111	Washer (@6)	16
O-018	15042BR-A001	Needle Bearing (1210Zz)	8
O-019	15046RB-A001	Driving Pin Washer (Tw1225)	12
O-020	04104400B000	Timing Pulley Driving Pin	4
O-021	03022SC-4517	Hex. Socket Set Screw(M4*L5)	16
O-023	14061AF-4517	Hex.Socket Screw(M8*L8)	4
O-024	04202400B000	Y Adjusting Shaft Guide (A)	4
O-025	04200500B000	Y Adjusting Shaft Guide (B)	4
O-026	16059SC-7113	Hex.Socket Bolt (M6*L12)	24
O-027	15006CL-B001	Adjusting Shaft Stopper	4
O-028	14006SC-7113	Hex.Socket Set Screw(M8*L15)	8
O-029	04103100B000	Timing Pulley Bracket (L)	4
O-030	04103200B000	Timing Pulley Bracket (R)	4
O-031	14065BR-A001	Needle Bearing (Nk18/16A)	8
O-032	04003500B000	Needle Bearing Collar	8
O-033	04014SC-4517	Hex.Socket Set Screw(M5*L5)	16
O-034	14002SC-7113	Hex.Socket Bolt (M6*L15)	16
O-037	14060AF-4517	Hex.Socket Screw(M6*L6)	8
O-038	04000300UHF1	Y-Drive Timing Belt (W:48)	2
O-039	16103CL-H001	Belt Catcher Plate (X,Y)	4
O-040	16104CL-H001	Belt Catcher Plate (Y)	4
O-041	15001BR-B001	Cam Roller Baearing	32
O-042	15002CW-B001	Cam Roller Stud (A)	16
O-043	18014SW-3115	Spring Washer (@4-No2)	16
O-044	15029SN-3211	Hex. Nut (M4-No2)	16
O-045	15003CW-B001	Cam Roller Stud (B)	16
O-046	12010SN-1211	Hex.Nut (M5)	16

Ref. No	Part No.	Part Names	Q'ty
O-047	04000500TH00	Y - Moving Plate	4
O-048	02023SC-7113	Hex.Socket Bolt (M4*L8)	32
O-049	15047MT-UI12	Y Motor (103H89223-5214)	1
O-050	14046SC-7113	Hex.Socket Bolt (M6*L30)	4
O-051	03026SW-9115	Spring Washer (@6)	4
O-052	08057SW-1111	Washer (@6)	4
O-053	16087CA-UI12	Y-Axis Motor Bracket	1
O-054	14027SC-4113	Hex.Socket Bolt (M8*L30)	4
O-055	15095SW-3115	Spring Washer (@8)	4
O-056	04029SW-A001	Stud Bolt Washer(S) (@8)	4
O-058	02023SC-7113	Hex.Socket Bolt (M4*L8)	24
O-059	18014SW-3115	Spring Washer (@4-No2)	24
O-060	04001700TH00	Roller For X-Frame Support	4
O-061	04104400B000	Timing Pulley Driving Pin	4
O-062	03022SC-4517	Hex. Socket Set Screw(M4*L5)	8
O-063	04002000TH00	Bearing Hk1220	8
O-064	15046EL-CT01	Xy-Sensor Assy	1
O-065	15120SC-A001	Position Adjusting Screw	1
O-066	18014SW-3115	Spring Washer (@4-No2)	1
O-067	04002100TH00	Sensor Bracket (X,Y) Th1215	1
O-068	15120SC-A001	Position Adjusting Screw	2
O-069	06011SW-2111	Washer (@3)	2
O-070	15121PR-A001	Square Washer	2
O-071	04002300TH00	Sensor Perecption Plate (Y)	1
O-072	22006SC-7113	Hex. Socket Bolt (M3*L8)	2
O-073	11019SW-9115	Spring Washer (3@)	2
O-074	06011SW-2111	Washer (@3)	2
O-075	04002400TH00	Pulley Washer Th1215	4
O-076	04002600THF0	Y-Driving Shaft (A) L1966	1
O-077	04002700THF0	Y-Driving Shaft (B) L948	1
O-078	04002700THF0	Y-Driving Shaft (B) L948	1
O-079	04002900THF0	Y-Driving Shaft (D) L1566	1
O-080	03003800B000	Coupling	4
O-081	08091SC-7113	Hex. Socket Bolt (M6*L20)	2
O-082	04000500UHF1	Y-Drive Timing Belt (W:35)	2
O-083	GP-008735-01	FRAME CONNECTING PLATE	4
O-084	15033CW-B051	BELT TENSION ADJUSTING SHAFT	2
O-085	04016MC-4113	CAM ROLLER GUIDE FIXED SCREW	56
O-086	04002600H000	TIMING PULLEY(16-S5M-32F)	2
O-087	04002700H000	TIMING PULLEY(16-S5M-32F)	2

Y-Axis Drive System I

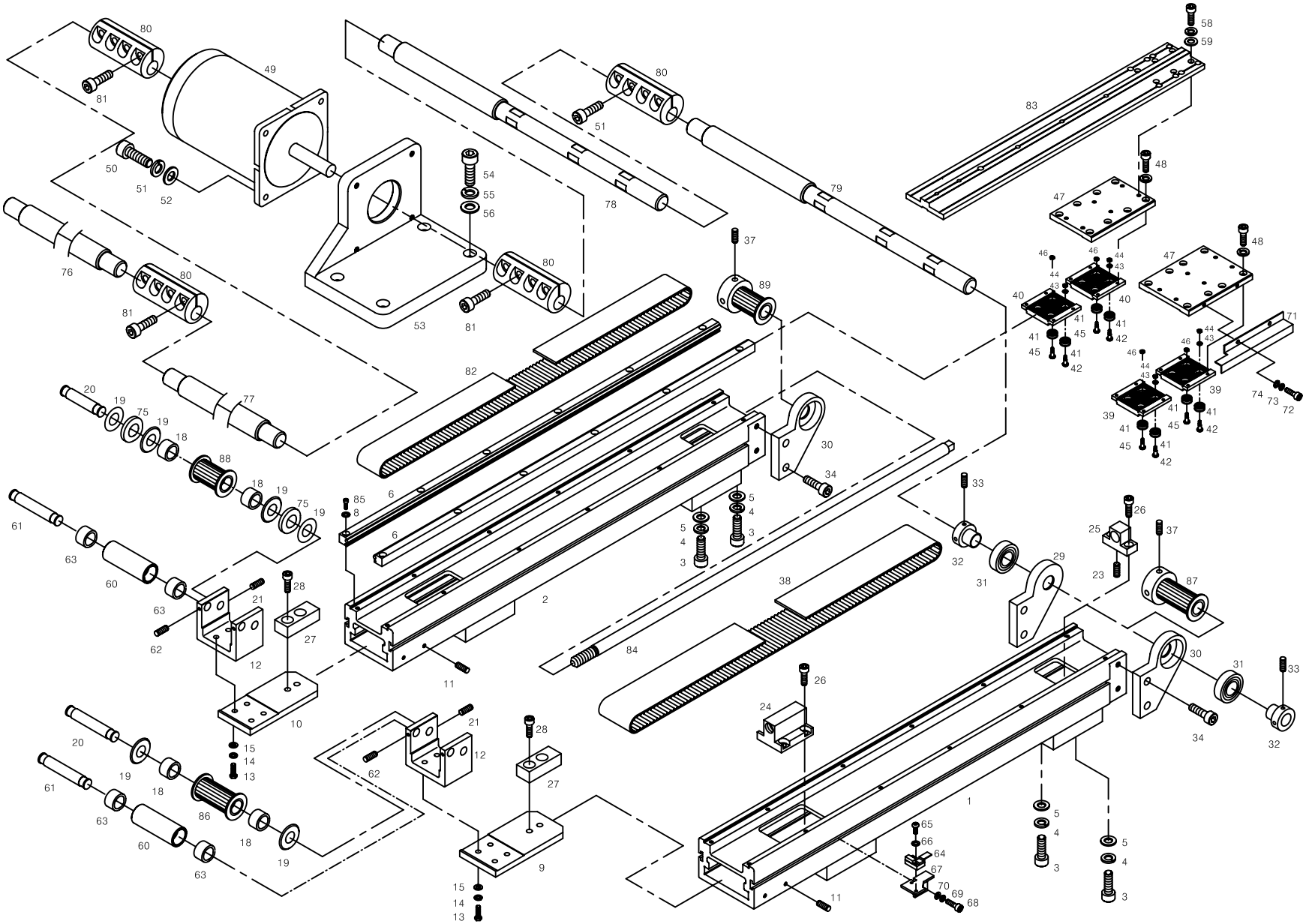

Ref. No	Part No.	Part Names	Q'ty
O-088	04500100E000	TIMMING PULLEY(16-S5M-32F)	2
O-089	04001000E000	TIMMING PULLEY(16-S5M-32F)	2

Ref. No	Part No.	Part Names	Q'ty

P

Y-Axis Drive System II

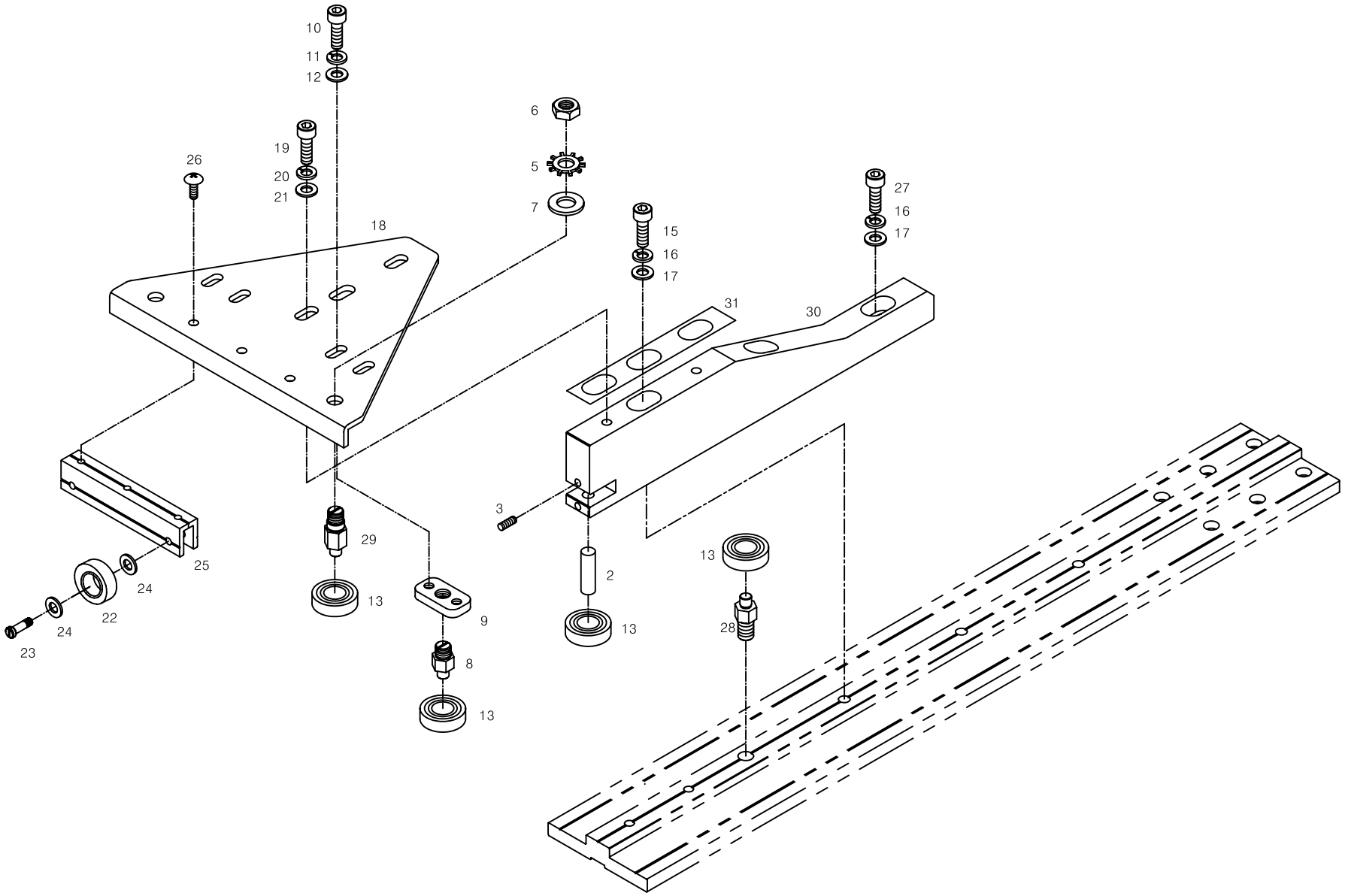

Ref. No	Part No.	Part Names	Q'ty
P-002	04000800TH00	Bearing Pin (B) Th1215	4
P-003	03022SC-4517	Hex. Socket Set Screw(M4*L5)	8
P-005	15077SW-2111	Washer (8@-S)	8
P-006	04032SN-A001	Hex. Nut (M8-No2)	8
P-007	04029SW-A001	Stud Bolt Washer(S) (@8)	8
P-008	04001000TH00	Bearing Pin (D) Th1215	8
P-009	04001100TH00	Bearing Pin (D) Bracket Th1215	8
P-010	08076SC-7113	Hex. Socket Bolt (M5*L12)	16
P-011	18048SW-3115	Spring Washer (@5)	16
P-012	16018SW-1111	Washer (@5)	16
P-013	15077BR-B001	Ball Bearing (Lr606Nppu)	24
P-015	14046SC-7113	Hex.Socket Bolt (M6*L30)	8
P-016	16014SW-4115	Spring Washer (@6)	12
P-017	08057SW-1111	Washer (@6)	12
P-018	04001300TH00	Connecting Plate For Bearing	4
P-019	08091SC-7113	Hex. Socket Bolt (M6*L20)	8
P-020	16014SW-4115	Spring Washer (@6)	8
P-021	08057SW-1111	Washer (@6)	8
P-022	04001400TH00	Bearing (Lr 604 Nppu)	8
P-023	04001500TH00	Bearing Pin Th1215	8
P-024	18015SW-3111	Washer (4@)	16
P-025	04001600TH00	Bracket Th1215	4
P-026	15042SC-3123	Truss Screw (M4*L6)	12
P-027	08091SC-7113	Hex.Socket Bolt (M6*L30)	4
P-028	04000710TH00	BEARING PIN (A)	4
P-029	04000910TH00	BRARING PIN (C)	8
P-030	04001210TH00	X-FRAME SUB. SUPPORTER	4
P-031	04003100THF0	X-FRAME SUB SUPPORT SPACER 0.5	4
	04003200THF0	X-FRAME SUB SUPPORT SPACER 0.3	4

Ref. No	Part No.	Part Names	Q'ty

Q

Frame

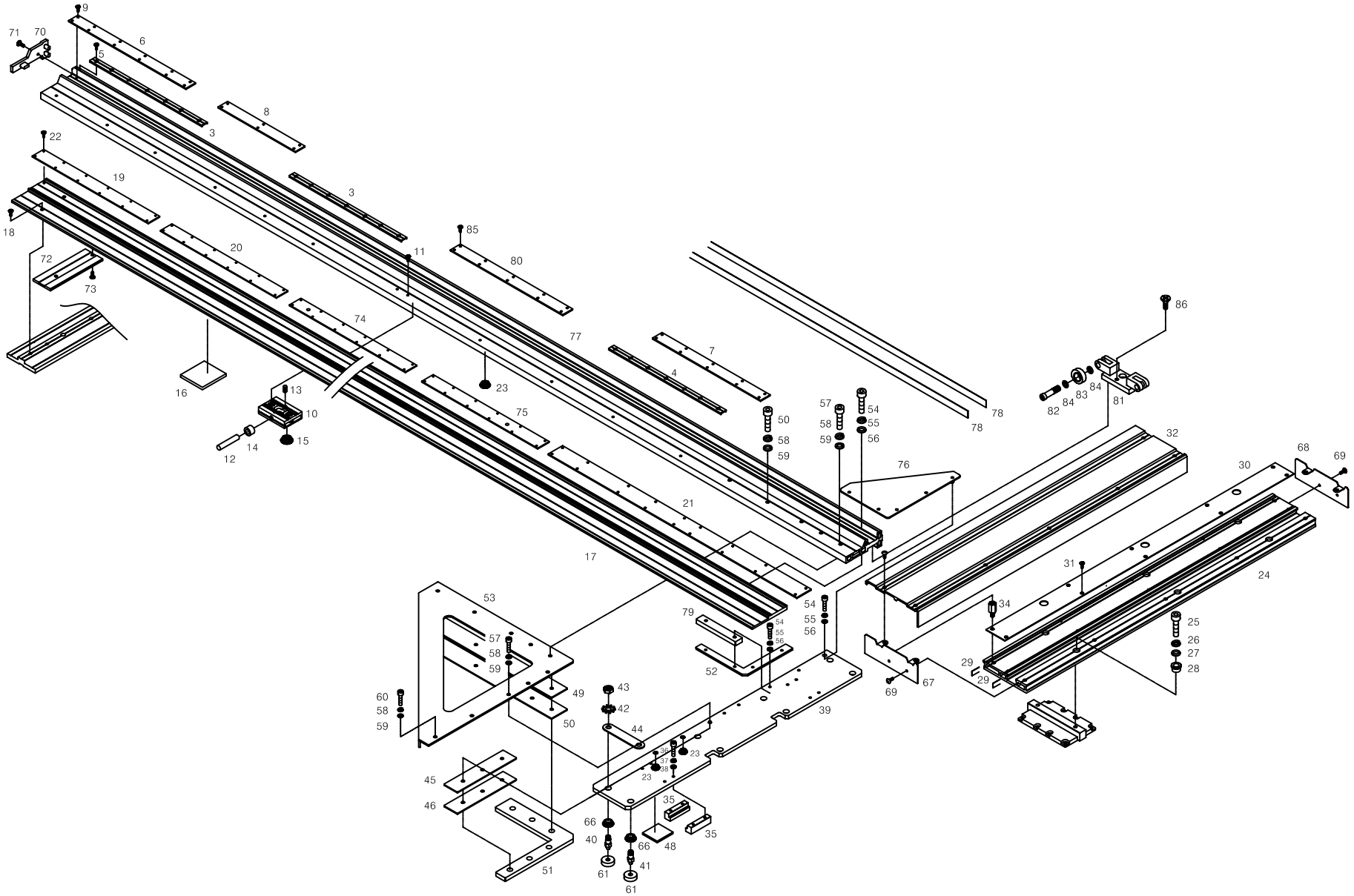
9
71
70
6
5
8
3
22
19
3
18
85
20
11
80
72
73
74
77
7
4
86
16
13
10
23
75
50
58
59
57
58
59
54
55
56
78
78
82
84
83
84
81
12
14
15
76
32
68
69
30
21
17
31
24
53
79
54
55
56
34
25
26
27
28
57
58
59
52
29
29
60
58
59
49
43
42
50
44
69
67
39
23
38
37
38
23
45
46
35
66
40
66
48
35
51
61
41
61

Ref.No	Part No.	Part Names	Q'ty
Q-003	06100300THF0	X- Frame Rail Plate Cap Th1215	14
Q-004	06100400THF0	X- Frame Rail Plate Cap Th1215	2
Q-005	10011SC-8119	Plus Screw (M3*L6)	80
Q-006	06100500THF0	Rail Plate (A) L799	6
Q-007	06100600THF0	Rail Plate (B) L399	2
Q-008	06100700THF0	Rail Plate (C) L721	1
Q-009	10011SC-8119	Plus Screw (M3*L6)	94
Q-010	06100800TH00	Frame Bearing Block Th1215	5
Q-011	15089SC-7119	C.S Screw (M4*L10)	10
Q-012	22007BR-UK01	Bearing Pin	5
Q-013	03022SC-4517	Hex. Socket Set Screw(M4*L5)	10
Q-014	22009BR-UK01	Needle Bearing (Taf51010)	5
Q-015	18045SC-A001	Screw Bush (M4*P0.7)	10
Q-016	06100900TH00	X-Frame Felt Th1215	6
Q-017	06101000TH00	X-Frame Rail Base Th1215	1
	06101000UIC0	X-Frame Rail Base UI1212	
Q-018	27018SC-8119	Plus Screw (M5*L15)	10
Q-019	06101100TH00	X-Frame Rail Base Plate (A)	1
Q-020	06101200TH00	X-Frame Rail Base Plate (B)	1
Q-021	06101300TH00	X-Frame Rail Base Plate (C)	1
Q-022	10011SC-8119	Plus Screw (M3*L6)	60
Q-023	22002CW-UK01	Screw Bush "A"	36
Q-024	GP-008743-01	Z- Frame Uh1515	1
Q-025	08091SC-7113	Hex. Socket Bolt (M6*L20)	6
Q-026	16014SW-4115	Spring Washer (@6)	6
Q-027	08057SW-1111	Washer (@6)	6
Q-028	18070CW-A021	Insert Bushing	6
Q-029	GP-008744-01	Z- Frame Rail Plate Uh1515	2
Q-030	GP-008745-01	Z- Frame Surface Rail Plate	1
Q-031	10011SC-8119	Plus Screw (M3*L6)	12
Q-032	GP-008746-01	Z- Frame Cover Uh1515	1
Q-033	02044SC-3123	Truss Screw (M5*L8)	9
Q-034	06002000TH00	Z- Frame Cover Stud Th1215	7
Q-035	06002100TH00	Z- Frame Float Preventive	4
Q-036	11029SC-4113	Hex. Socket Bolt (M4*L20)	8
Q-038	18015SW-3111	Washer (4@)	8
Q-039	06100800UHF0	Y- Frame Uh1515	1
Q-040	06002300TH00	Bearing Pin (E) Th1215	4
Q-041	06002400TH00	Bearing Pin (F) Th1215	4
Q-042	15077SW-2111	Washer (8@-S)	6
Q-043	04032SN-A001	Hex. Nut (M8-No2)	6

Ref. No	Part No.	Part Names	Q'ty
Q-044	06002500TH00	Bearing Pin Space Th1215	6
Q-045	06002600TH00	Y-Frame Connecting Spacer T1.0	1
Q-046	06004000TH00	Y-Frame Connecting Spacer T0.8	1
Q-049	06002800TH00	X-Frame Connecting Spacer F-A	1
Q-050	06004100TH00	X-Frame Connecting Spacer T0.8	1
Q-051	06003000TH00	Frame Connecting Block (F)	1
Q-052	06101100UHF0	Frame Connecting Block (L)	1
Q-053	06003200TH00	Z-Frame Connecting Cover (A)	1
Q-054	08062SC-7113	Hex. Socket Bolt (M5*L20)	3
Q-055	18048SW-3115	Spring Washer (5@)	3
Q-056	18049SW-3111	Washer (@5)	3
Q-057	08062SC-7113	Hex. Socket Bolt (M5*L20)	6
Q-058	18048SW-3115	Spring Washer (5@)	10
Q-059	18049SW-3111	Washer (@5)	10
Q-060	18047SC-7113	Hex/ Socket Bolt (M5*L15)	4
Q-061	15077BR-B001	Ball Bearing (Lr606Nppu)	8
Q-066	06003400TH00	Y-Frame Bush Th1215	6
Q-067	06003600TH00	Z-Frame Side Cover (F) Th1215	1
Q-068	06003700TH00	Z-Frame Side Cover (R) Th1215	1
Q-069	09005SC-3123	Truss Screw (M3*L6)	4
Q-070	06003800TH00	X-Frame Side Cap Th1215	1
Q-071	09005SC-3123	Truss Screw (M3*L6)	1
Q-072	06004200TH00	Rail Slide Block	15
Q-073	10011SC-8119	Plus Screw (M3*L6)	30
Q-074	06101400TH00	X-Frame Rail Base Plate (D)	1
Q-075	06101500TH00	X-Frame Rail Base Plate (E)	1
Q-076	06101200UHF0	Z-Frame Connecting Cover (B)	1
Q-077	06100110UHF0	X - FRAME L6429 UH1515	1
	06100110UIC0	X - FRAME L5609 UI1212	1
Q-078	06100210UHF0	X - FRAME RAIL PLATE UH1515	4
	06100210UIC0	X - FRAME RAIL PLATE L5455	4
Q-079	06100910UHF0	Y-FRAME CONNECTING SPACER (L)	1
Q-080	06101600TH00	RISE PREVENSION RAIL PLATE D	4
	06101600UIC0	RAIL PLATE (C) L523	4
Q-081	04003000THF0	RISE PREVENSION BRACKET (LOW)	4
Q-082	04003300THF0	RISE PREVENSION BEARING PIN	4
Q-083	04001400TH00	BEARING (LR 604 NPPU)	8
Q-084	18015SW-3111	WASHER (4@)	16
Q-085	10011SC-8119	PLUS SCREW (M3*L6)	40
Q-086	15089SC-7119	C.S SCREW (M4*L10)	4

Q1 Border Frame (OPTION)

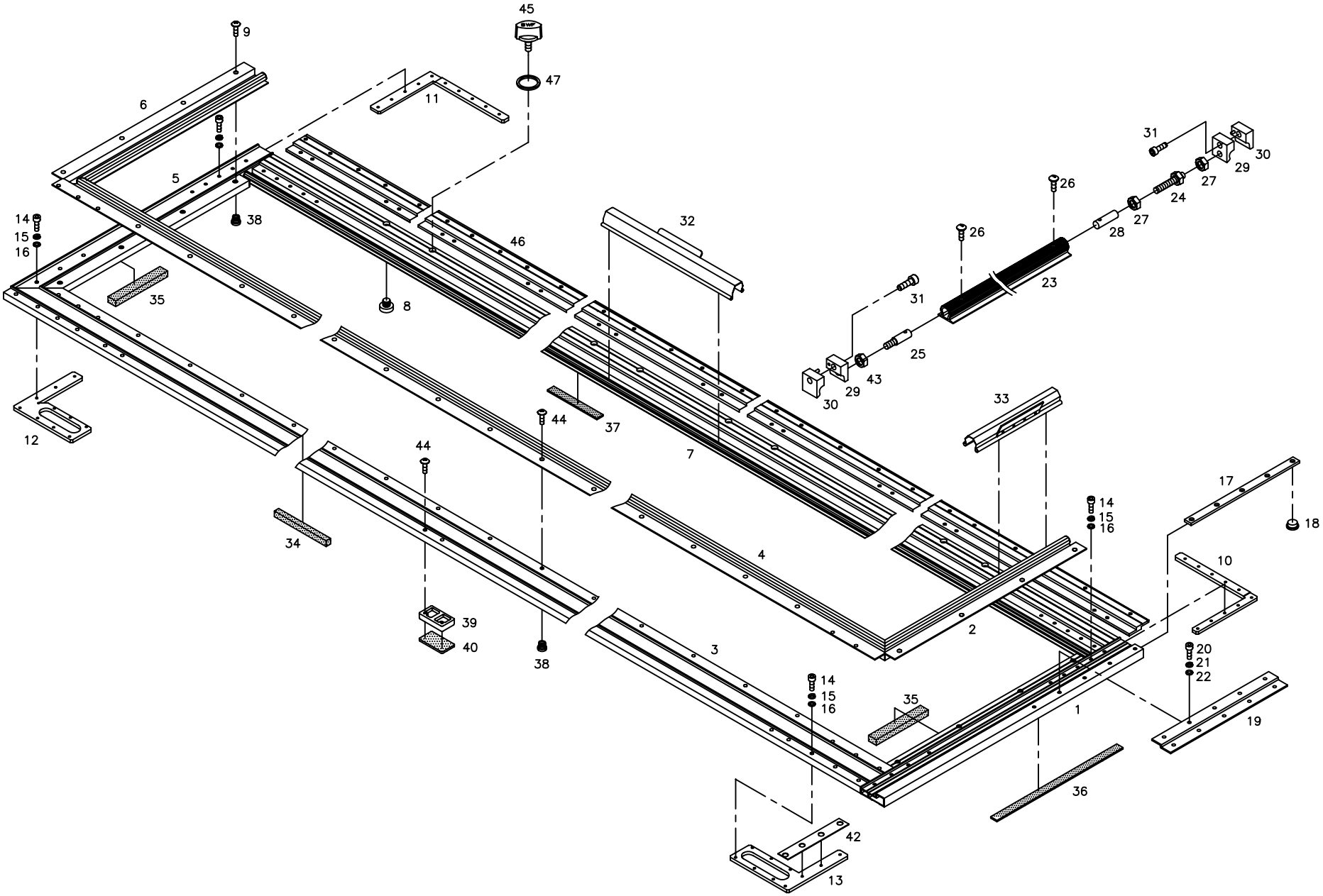

Ref. No	Part No.	Part Names		Q'ty
Q1001	10800100UHF0	BORDER FRAME (A) L=616	(UH1515)	1
	24001AD-UI12	BORDER FRAME (A) L=616	(UI1212)	
Q1002	24002AD-UI12	BORDER FRAME (A-1)		1
Q1003	10800200UHF0	BORDER FRAME (B) L=6138	(UH1515)	1
	24003AD-UI12	BORDER FRAME (B) L=5318	(UI1212)	
Q1004	10800300UHF0	BORDER FRAME (B-1) L=6088	(UH1515)	1
	24004AD-UI12	BORDER FRAME (B-1)	(UI1212)	
Q1005	24005AD-UI12	BORDER FRAME (C) L=587		1
Q1006	24006AD-UI12	BORDER FRAME (C-1)		1
Q1007	10800400UHF0	BORDER FRAME (D) L=6128	(UH1515)	1
	24007AD-UI12	BORDER FRAME (D) L=5288	(UI1212)	
Q1008	22002CW-UK01	SCREW BUSH "A"		16
Q1010	24010PR-UI12	BORDER FRAME GUIDE (A)		1
Q1011	24011PR-UI12	BORDER FRAME GUIDE (B)		1
Q1012	18016PR-A001	LEFT CORNER GUIDE (B)		1
Q1013	18025PR-A001	RIGHT CORNER GUIDE (F)		1
Q1014	02015SC-7113	HEX.SOCKET BOLT(M4*L10)		40
Q1015	18014SW-3115	SPRING WASHER (@4-NO2)		40
Q1016	18015SW-3111	WASHER (4@)		40
Q1017	24017AD-UI12	BORDER FRAME CNNECTING BLOCK	(UI1212)	1
Q1018	18015CW-UK01	CONNECTING BLOCK BUSH		5
Q1019	24019AD-UI12	BORDER FRAME FIXING PLATE	(UI1212)	1
Q1020	08076SC-7113	HEX. SOCKET BOLT (M5*L12)		10
Q1021	18048SW-3115	SPRING WASHER (5@)		10
Q1022	18049SW-3111	WASHER (@5)		10
Q1023	24023AD-UI12	BORDER FRAME SUPPORTER		5
Q1024	30004CW-A001	CONNECTING BOLT (A)		5
Q1025	30005CW-A001	CONNECTING BOLT (B)		5
Q1026	05062SC-A001	C.S SCREW		10
Q1027	13042SN-1111	HEX.NUT (M6*T5-R)		10
Q1028	30006CW-A001	BORDER FRAME BUSHING NUT		5
Q1029	30002AD-A001	BORDER FRAME JOINT (A)		10
Q1030	30003AD-A001	BORDER FRAME JOINT (B)		10
Q1031	11029SC-4113	HEX. SOCKET BOLT (M4*L20)		10
Q1032	18085PR-A001	EMBROIDERY FRAME CLIP L=250	(UH1515)	26
	18085PR-A001	EMBROIDERY FRAME CLIP L=250	(UI1212)	36
Q1033	24034PR-UI12	EMBROIDERY FRAME CLIP L=200		4
Q1034	18069SF-AA00	FRONT FELT (2) (L=135)		12
Q1035	18071SF-A001	REAR FELT (1) (L=135)		8
Q1036	18062SF-A001	Y-AXIS SASH (L) FELT		1
Q1037	24016SF-T121	FELT		10

Ref. No	Part No.	Part Names		Q'ty
Q1038	18044SC-A001	SCREW BUSH (M5*P0.8)		35
Q1039	18059PM-A001	FELT ATTACHMENT		10
Q1040	18061SF-A001	FRONT FELT (A)		10
Q1042	18011PR-A001	X-AXIS SASH PLATE (A) (1T)	(UI1212)	1
Q1043	17053SN-1111	HEX. NUT(L) (M6*T5-L)		5
Q1044	02010SC-3123	TRUSS SCREW (M4*L8)		35
Q1045	09000100U000	TUBULAR FRAME FIXING SCREW		16
Q1046	10800600UHF0	BORDER FRAME CONNECTING PLATE	(UH1515)	5
	10800500UIC0	BORDER FRAME CONNECTING PLATE A	(UI1212)	1
	10800600UIC0	BORDER FRAME CONNECTING PLATE B	(UI1212)	1
	10800700UIC0	BORDER FRAME CONNECTING PLATE C	(UI1212)	1
	10800800UIC0	BORDER FRAME CONNECTING PLATE D	(UI1212)	1
Q1047	10000800I000	INSURT BUSH WASHER		20

R

Tubular Frame

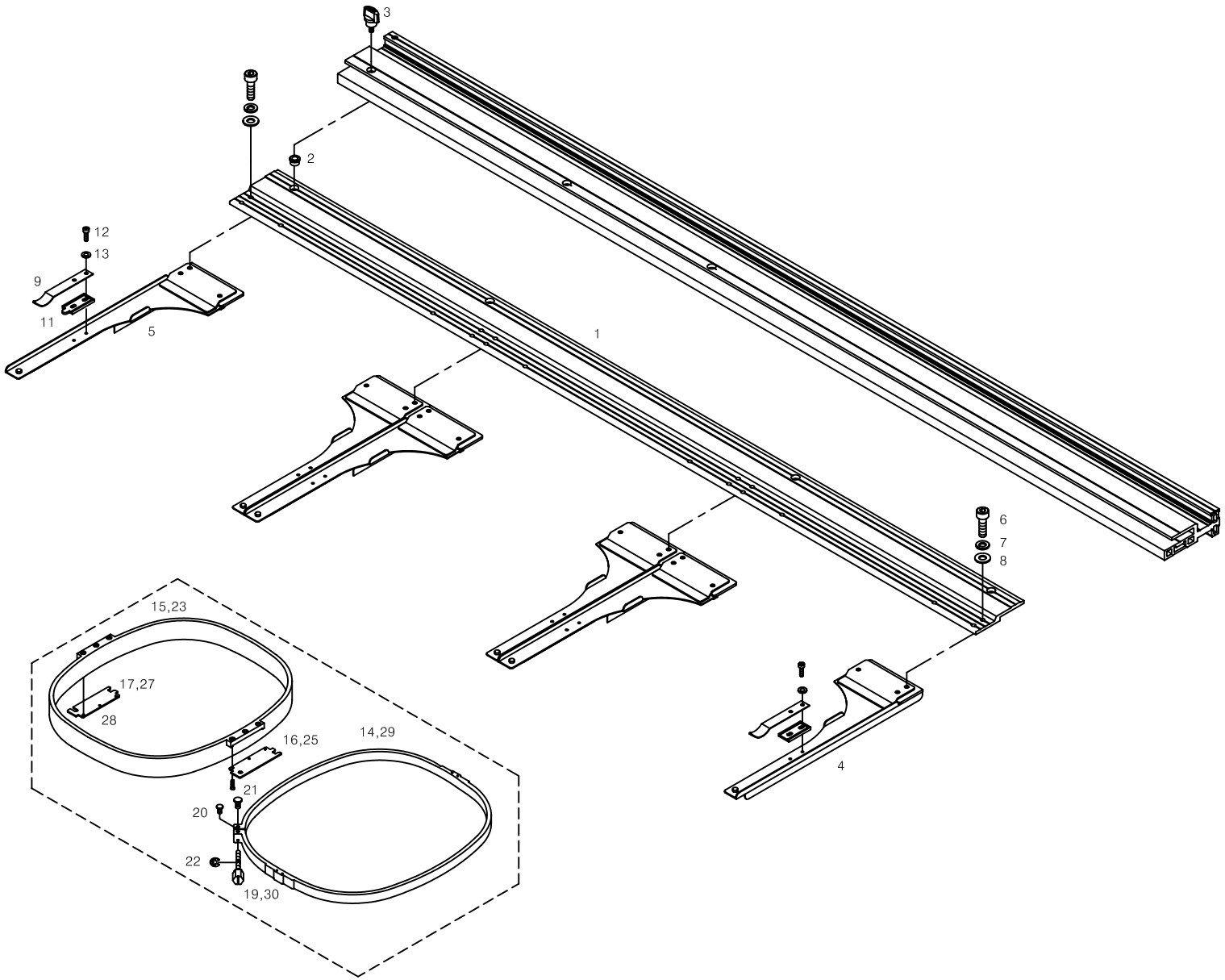

Ref. No	Part No.	Part Names	Q'ty
R-001	09100100UHF0	Tubular Frame Uh1515	5
	09100100UIC0	Tubular Frame UI1212	4
R-002	18070CW-A021	Insert Bushing	21
R-003	09100200TH00	Tubular Frame Fixing Screw	21
R-004	09100200UHF0	Attachment(L) - Set	15
R-005	09100300UHF0	Attachment(L) - Set	15
R-006	05008SC-4113	Hex.Socket Bolt (M4*L16)	90
R-007	18014SW-3115	Spring Washer (@4-No2)	90
R-008	18015SW-3111	Washer (4@)	90
R-009	22005PR-T121	Clip	30
R-010	22004PM-T121	Clip Bracket (R)	15
R-011	22003PM-T121	Clip Bracket (L)	15
R-012	22006SC-7113	Hex. Socket Bolt (M3*L8)	60
R-013	06011SW-2111	Washer (@3)	60
R-014	08200200UH00	Tubular (Outer)	30
R-015	08200100UH00	Tubular (Inner)	30
R-016	17014PR-UK01	Tubular Holder "A"	30
R-017	17015PR-UK01	Tubular Holder "B"	30
R-018	10011SC-8119	Plus Screw (M3*L6)	80
R-019	22044CW-UK01	Adjusting Bolt	30
R-020	22045CW-UK01	Adjusting Bolt Guide	30
R-021	22046CW-UK01	Adjusting Nut	30
R-022	15159SR-4013	E-Ring (3@)	30
R-023	22017BM-UH16	Sqaure Frame 30*30 Ass'Y	30
R-025	08200300UH00	Tubular Frame Holder (L)	30
R-026	15064AF-A001	C.S Screw (M3*L3.5)	60
R-027	08200400UH00	Tubular Frame Holder (R)	30
R-028	15064AF-A001	C.S Screw (M3*L3.5)	60
R-030	22044CW-UK01	Adjusting Bolt	30

Ref. No	Part No.	Part Names	Q'ty

S/B Switch

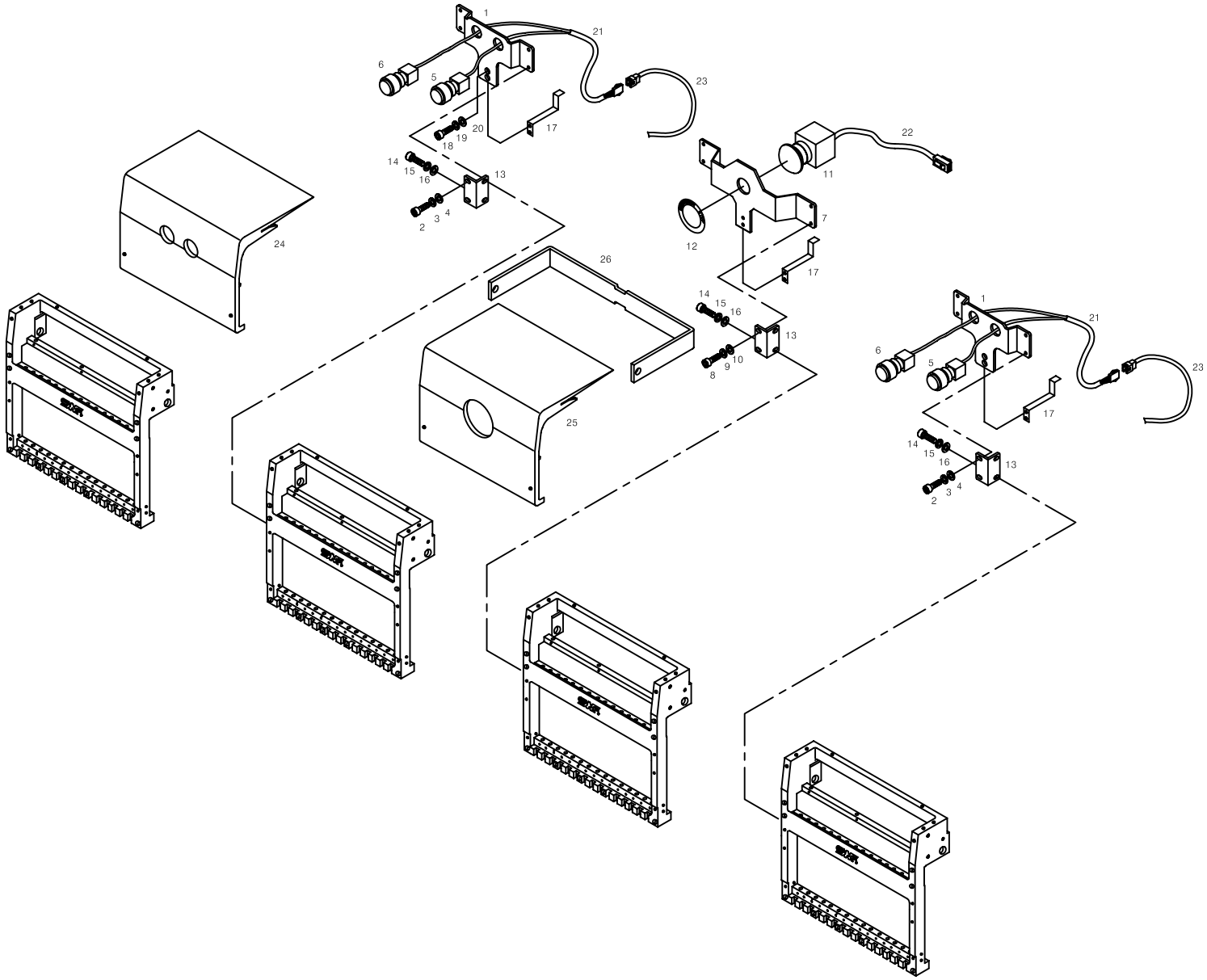

Ref. No	Part No.	Part Names	Q'ty
S-001	02024LA-UK14	S/B Switch Base	4
S-002	18014SC-7113	Truss Screw (M4*L9)	16
S-003	18014SW-3115	Spring Washer (@4-No2)	16
S-004	18015SW-3111	Washer (4@)	16
S-005	02026EL-UK01	Start Switch Set	4
S-006	02027EL-UK01	S/B Switch Set	4
S-007	04000105UH00	S/B Switch Base	2
S-008	18014SC-7113	Truss Screw (M4*L9)	8
S-009	18014SW-3115	Spring Washer (@4-No2)	8
S-010	18015SW-3111	Washer (4@)	8
S-011	02036EL-UK01	Emergency Switch Set	2
S-012	02103ET-UK01	Emergency Switch Sticker	2
S-013	04000104UK00	Switch Base Holder	12
S-014	02023SC-7113	Hex.Socket Bolt (M4*L8)	24
S-015	18014SW-3115	Spring Washer (@4-No2)	24
S-016	18015SW-3111	Washer (4@)	24
S-017	02062PR-UI12	Cable Holder	6
S-018	02023SC-7113	Hex.Socket Bolt (M4*L8)	12
S-019	18014SW-3115	Spring Washer (@4-No2)	12
S-020	18015SW-3111	Washer (4@)	12
S-021	25023EL-UK01	Cable (25-23)	1
S-022	02106400U000	Emeguncy S/W Cable	1
S-024	09000105UH00	Top Shaft Cover "A" (L146)	4
S-025	09000205UH00	Top Shaft Cover "B" (L146)	2
S-026	12001600UHF0	Cable Holder (B)	1

Ref. No	Part No.	Part Names	Q'ty

X-Y Driver

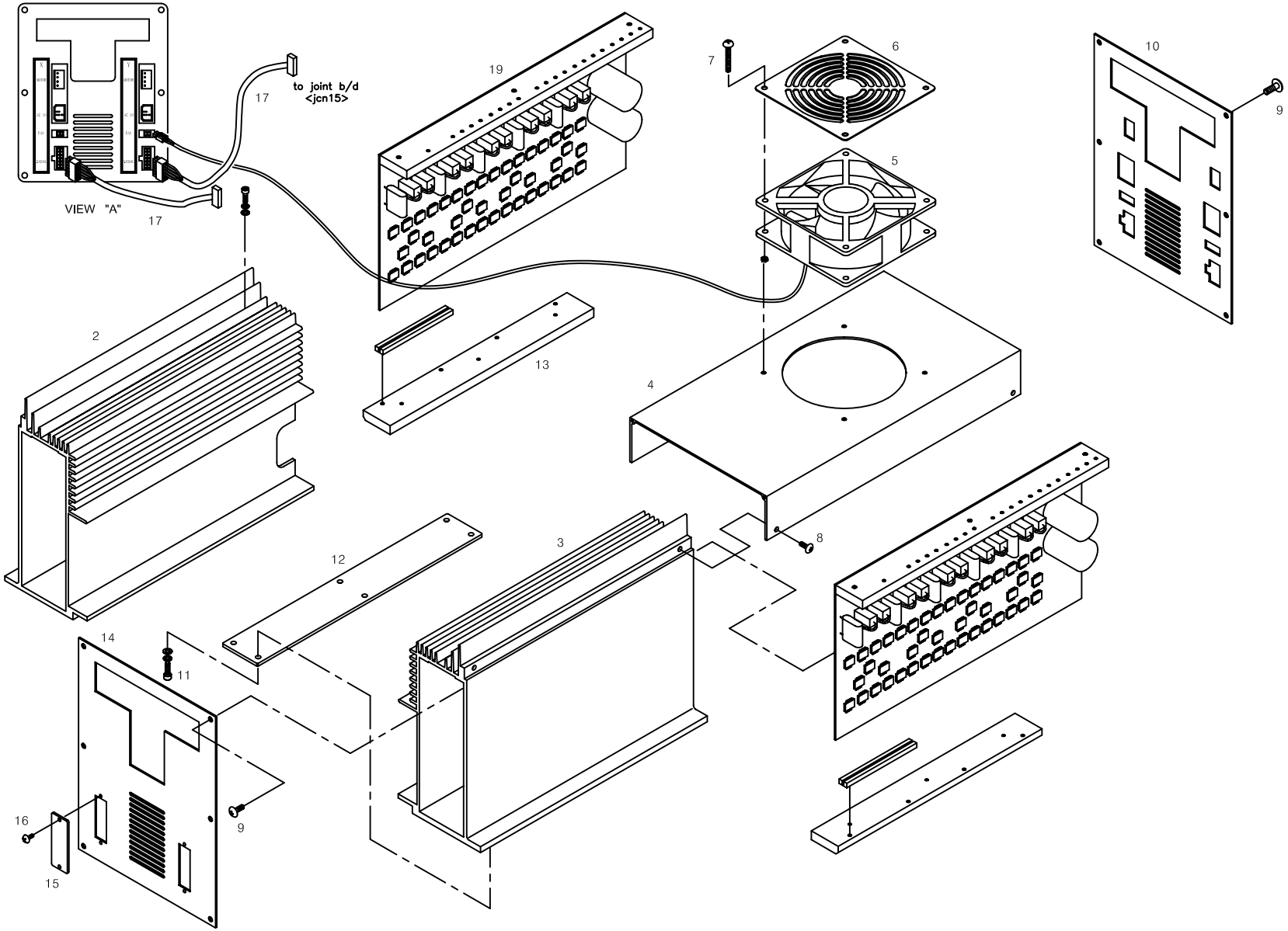

Ref. No	Part No.	Part Names	Q'ty
T-001	01-0000-SW70	Step P.C.B. Ass'Y	2
T-002	01-103A-SW70	Drive Box (L)	1
T-003	01-104A-SW70	Drive Box (R)	1
T-004	01-005A-SW70	Top Cover	1
T-005	03-002A-SW70	Pluse Trans 16Mh(Pt1012)	1
T-006	03-003A-SW67	Fan Cover	1
T-007	10-017M-SW66	Fan Screw (M4*L50)	1
T-008	10-014M-SW66	Screw (M4*L12)	4
T-009	10-040M-SW66	Cover Screw (M4*L6)	12
T-010	01-006A-SW70	Front Cover	1
T-011	10-018M-SW66	Screw (M4*L10)	4
T-012	01-009A-SW70	Box Connecting Plate	1
T-013	01-006A-SW70	Front Cover	1
T-014	01-008A-SW70	Rear Cover	1
T-015	02-001B-SW67	Switch Cover	2
T-016	10-015M-SW66	Screw (M3*L6)	4
T-017	25009EL-UI12	X-Y Driver Power & Signal J/B	2
T-019	10-0000-SW70	NEW AMP BOARD	1

Ref. No	Part No.	Part Names	Q'ty

Main Controller

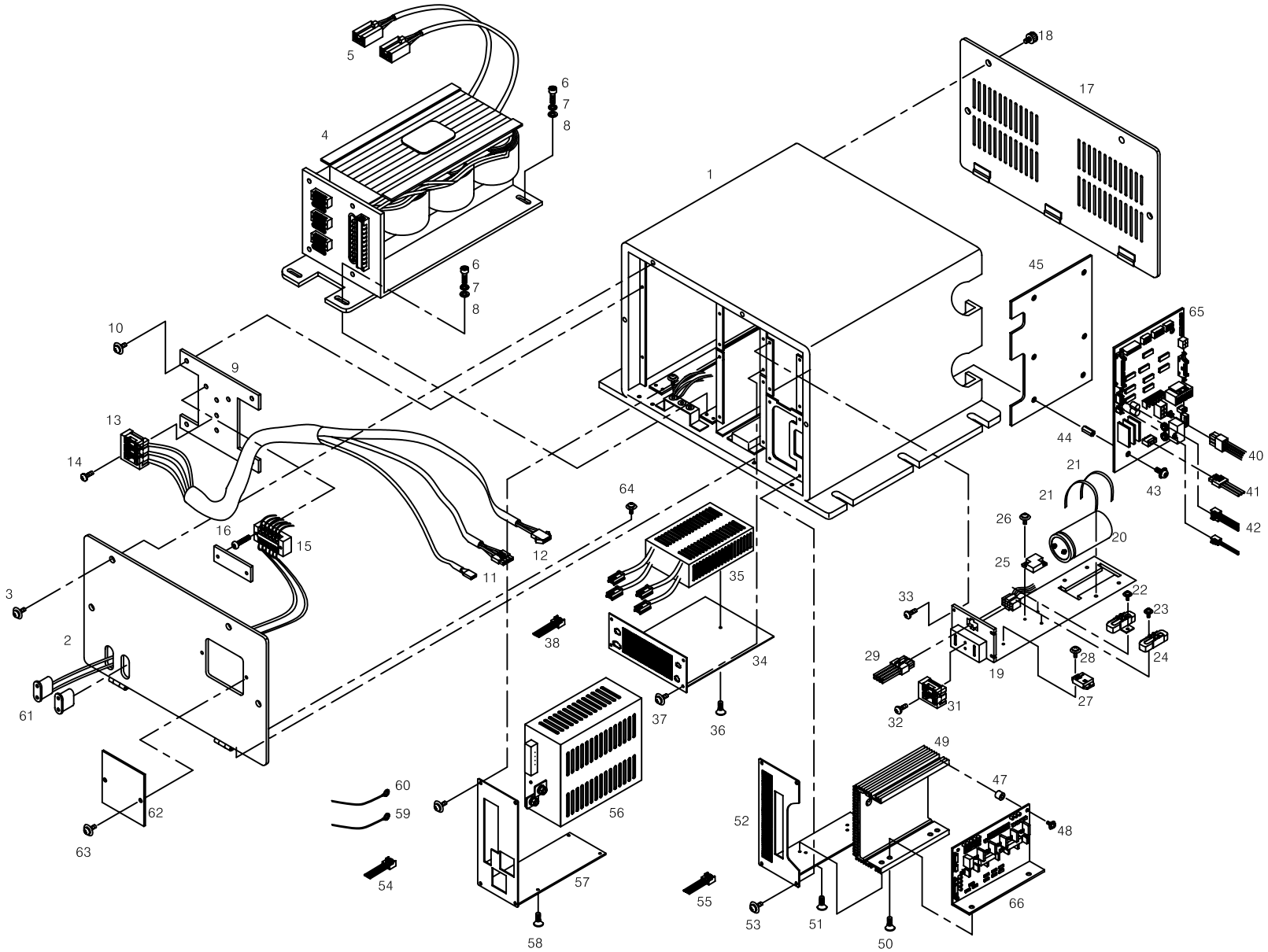

Ref. No	Part No.	Part Names	Q'ty
U-001	03-001A-SW66	Control Box	1
U-003	02-002C-SW66	Fixing Screw	4
U-004	06-013A-SW66	Transformer	1
U-005	01-001A-SW66	X-Y Power Input Cable (25-3)	2
U-006	10-016M-SW66	Wrench Screw (M6*L12)	4
U-007	10-003S-SW66	Spring Washer (6@)	1
U-008	10-004S-SW66	Washer (6@)	1
U-009	03-013A-SW66	Fuse Fixed Plate	1
U-010	07-004S-SM5S	Encoder Fixing Screw (M4*L8)	3
U-011	06-007B-SM66	Color Change Motor Cable	1
U-012	06-004B-SW66	Lamp Cable 25-18	1
U-013	03-005B-SW62	Fuse Holder	1
U-015	05-004B-SW65	Terminal Block Cover	1
U-016	10-018M-SW66	Screw (M4*L10)	4
U-017	03-016A-SW66	Con.Box Rear Cover	2
U-019	03-014A-SW66	Condencer Fixed Plate	1
U-020	05-002A-SW65	Condencer 33,000Uf	1
U-021	06-018C-SW66	Cable Tie	4
U-022	05-001A-SW65	5/150W	1
U-023	10-021M-SW66	Screw	2
U-024	09-007A-SC53	Resistor	2
U-025	05-010A-SW65	S20Vt80	1
U-026	10-021M-SW66	Screw	2
U-027	05-004A-SW65	Dieod S30Vt60	1
U-028	07-005S-SM5S	Screw For Fdd (M3*L10)	2
U-029	01-019M-SW66	Power Connect	2
U-030	06-005C-SW66	Power Input Cable	1
U-031	05-003B-SW65	Huse Holder	2
U-032	10-021M-SW66	Screw	2
U-034	03-007A-SW66	Smps Bracket	1
U-035	06-025A-SW66	Smps	1
U-037	07-004S-SM5S	Encoder Fixing Screw (M4*L8)	4
U-039	02-001A-SW61	Joint Board Ass'Y	1
U-040	06-009B-SW66	Joint Connecting Cable (25-17)	1
U-041	06-003B-SW66	C/C Connecting Cable (25-7)	1
U-042	06-013B-SW66	Joint Card Con. Cable (25-69)	1
U-043	10-028S-SC53	Pedal Pcb Fixing Screw	6
U-044	08-003M-SW67	Stud Bolt	6
U-047	10-006M-PT10	Insulator Bushing For Cpu	2
U-048	07-005S-SM5S	Screw For Fdd (M3*L10)	2

Ref. No	Part No.	Part Names	Q'ty
U-049	01-101A-SW67	Heat Sink (T)	4
U-053	10-018M-SW66	Screw (M4*L10)	4
U-056	06-025A-SW66	Smps	1
U-057	03-007A-SW66	Smps Bracket	1
U-060	06-013B-SW66	Joint Card Con. Cable (25-69)	1
U-063	10-040M-SW67	Truss Screw (M4*L8)	1
U-064	10-022M-SW66	FIXED SCREW 4*8	4
U-065	01-0000-UI15	JOINT BOARD ASS'Y	1
U-066	14-0000-HB10	THREAD CONTROL JOINT BOARD	1

V

Operation Box

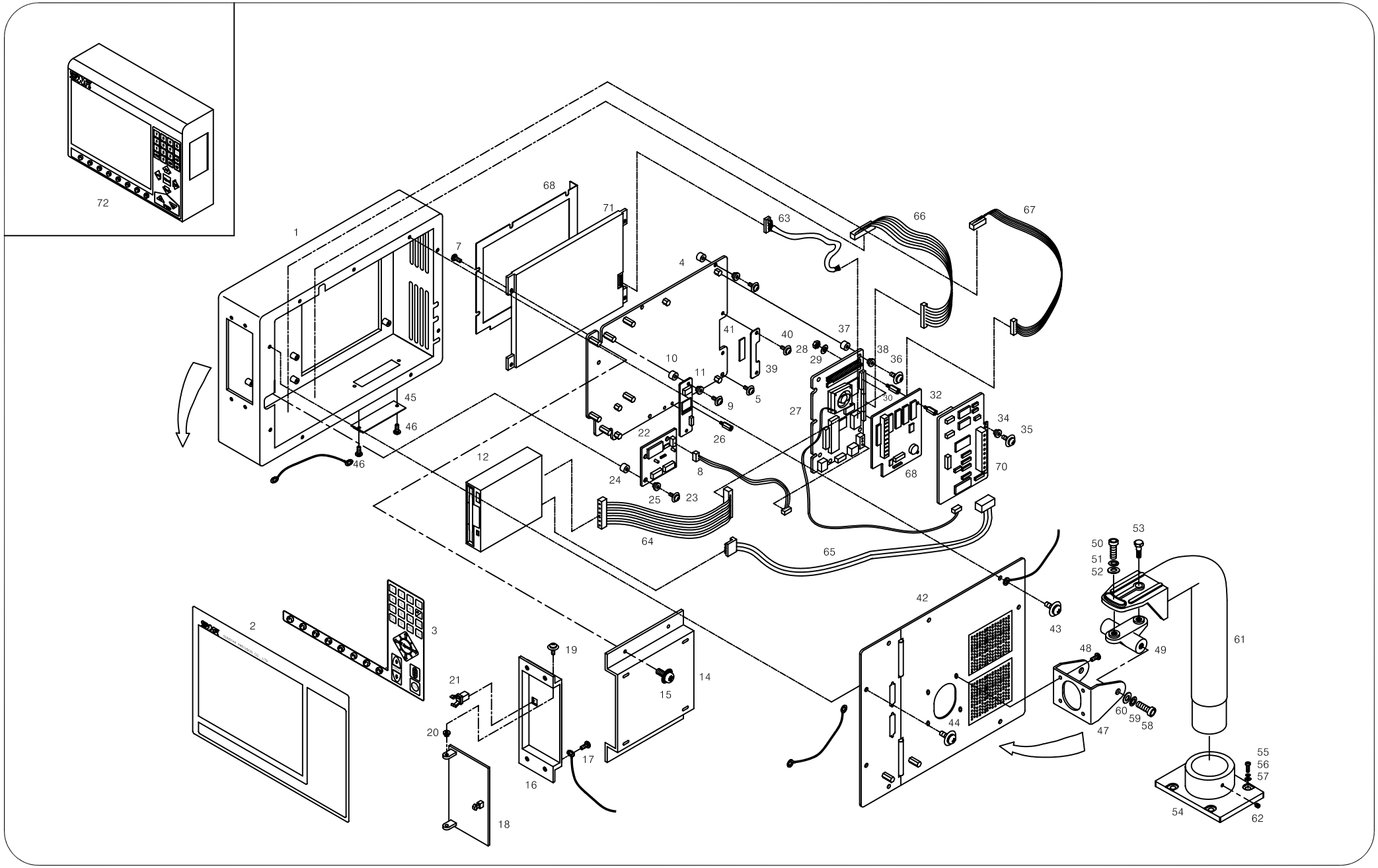

Ref.No	Part No.	PartNames	Q'ty
V-001	01-111A-OT10	Option OP Box-NCT(500)	1
V-002	01-004A-OT10	LCD Protected Plate	1
V-003	01-003A-OT10	Option Membrance S/W	1
V-004	01-116A-OT10	Option BasePlate	1
V-005	10-021M-SW66	Screw	6
V-007	10-003M-SW66	Screw	4
V-008	22026EL-A001	Inverter	1
V-009	10-001A-SW66	Screw	2
V-010	10-001C-AT10	Bushing-C	2
V-011	10-109C-3701	Bushing	2
V-012	10-004A-AT10	Fdd	1
V-013	22027SC-9134	Screw M3*L12	4
V-014	01-005A-OT10	Fdd Beacket (B) Option	1
V-015	10-028S-SC53	Pedal Pcb Fixing Screw	4
V-016	01-103A-OT10	Fdd Bracket (A)	1
V-017	11018SC-9134	Plus Screw (M3*L10)	4
V-018	01-002B-SW63	Fdd Protcetor	1
V-019	10-019M-SW66	Screw (M3*L10)	2
V-020	10-109C-3701	Bushing	2
V-021	01-003B-SW63	Push Lathy	1
V-022	16-001A-SW61	Key Board	1
V-023	10-021M-SW66	Screw	4
V-024	10-001C-AT10	Bushing-C	8
V-025	10-109C-3701	Bushing	8
V-026	10-022B-SW70	Screw Support	1
V-027	10-100A-HB10	CPU Card Ass'y (UI1215)	1
V-028	—	Hex.Nut	2
V-029	—	Washer	2
V-030	—	Memory Card Stud	2
V-032	01-019M-SW67	Stud Bolt	2
V-034	10-109C-3701	Bushing	2
V-035	10-028S-SC53	Pedal Pcb Fixing Screw	2
V-036	07-005S-SM5S	Screw For MR sensor	4
V-037	10-001C-AT10	Bushing-C	3
V-038	10-109C-3701	Bushing	3
V-039	01-002B-OT10	Connector Plate	1
V-040	10-021M-SW66	Screw	1
V-041	04-003B-OT84	Connector Pross Rubbor	1
V-042	01-102A-OT10	Option OP Box Cover	1
V-043	10-040M-SW67	Screw For Box Cover	4

Ref. No	Part No.	Part Names	Q'ty
V-044	10-023M-SW66	Cover Screw (M4*L8)	3
V-045	04-001B-OT84	Connect Cover	1
V-046	10-004M-SW66	Screw (M3*L8)	2
V-047	19033PR-T121	Option Operation Box Hinge Bracket	1
V-048	22033SC-7134	Plus Screw (M5*L12)	4
V-049	19035CA-T121	Hinged Block	1
V-050	08087SC-7113	Hex.Socket Bolt (M8*L25)	1
V-051	15095SW-3115	Spring Washer (@8)	1
V-052	08041SW-1111	Washer (@8-S)	1
V-053	19039CW-T121	Adjusting Bolt	1
V-054	05000100TH00	O/P Holder Fixing Bracket	1
V-055	18153SC-3123	Plus Screw (M4*L10)	4
V-056	18014SW-3115	Spring Washer (@4-No2)	4
V-057	06011SW-2111	Washer (@3)	4
V-058	08087SC-7113	Hex.Socket Bolt (M8*L25)	2
V-059	15095SW-3115	Spring Washer (@8)	2
V-060	08041SW-1111	Washer (@8-S)	2
V-061	05000200TH00	Operation Box Holder	1
V-062	14060SC-4517	Hex.Socket Set Screw (M6*L6)	2
V-063	10-001A-AF01	Lcd Monitor Cable (10.4)	1
V-064	06-016B-SW66	Fdd-Cpu Cable (25-81)	1
V-065	05-002B-OT84	Fdd Power Cable (84-2)	1
V-066	01-108A-OT10	Paraller Port Cable (84-6-1)	1
V-067	01-107A-OT10	Serial Port (84-5-1)	1
V-068	06-600A-SW64	Flash Memory Ass'y (UI1215)	1
V-070	02-0000-MHS1	MHS I/O Board Ass'y	1
V-071	20-006A-SW70	LCD MONITOR (10.4")-LB104V3	1
V-072	SWF-OB-D	OP BOX SET	1

W

Bobbin Winder

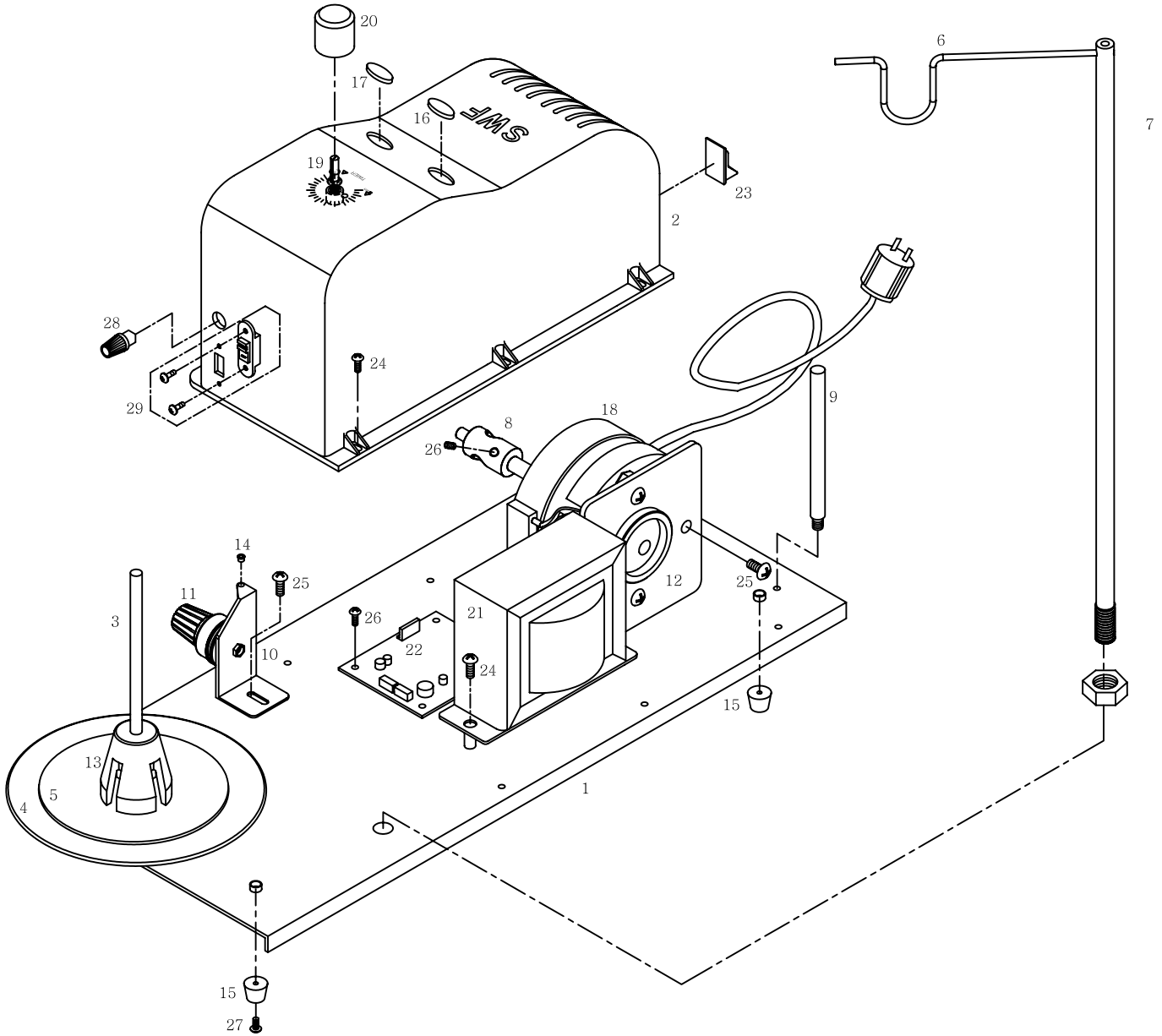

Ref.No	Part No.	Part Names	Q'ty
W-001	GP-014870-00	Base	1
W-002	GP-014869-01	Cover	1
W-003	GP-014366-00	Spool Post	1
W-004	GP-014363-00	Spool Support Base	1
W-005	GP-014365-00	Spool Support Base Sponge	1
W-006	GP-014369-00	Antenna Bar Hanger	2
W-007	GP-014368-00	Antenna Bar	1
W-008	GP-014354-00	Bobbin Shaft	1
W-009	02026SC-A001	Stand	1
W-010	GP-014370-00	Tension Control Holder	1
W-011	AS-003951-00	Thread Control Device Ass'y	1
W-012	GP-014871-00	Motor Bracket	1
W-013	12012-PM-A001	Spool Holder	1
W-014	05452CM-A001	Thread Guide Bushing	1
W-015	GP-014346-00	Rubber For Support Base	4
W-016	EP-000080-00	Push Switch (Start)	1
W-017	EP-000081-00	Push Switch (Stop)	1
W-018	MO-000029-00	Motor Ass'y	1
W-019	GP-014677-00	VR Knob	1
W-020	EP-000083-00	VR	1
W-021	EP-000078-00	Transformer A'ssy	1
W-022	EP-000095-00	PCB (DW-BW01)	1
W-023	EP-000079-00	On / Off Switch	1
W-024	18153SC-3123	Truss Screw (M4*L12)	8
W-025	15042SC-3123	Truss Screw (M4*L6)	9
W-026	SC-000173-00	Set Screw (M5*L4)	1
W-027	13054SC-3123	Truss Screw (M3*L8)	4
W-028	GP-014678-00	Fuse Holder	1
W-029	EP-000082-00	Switch (Select)	1

Ref. No	Part No.	Part Names	Q'ty

Lubrication

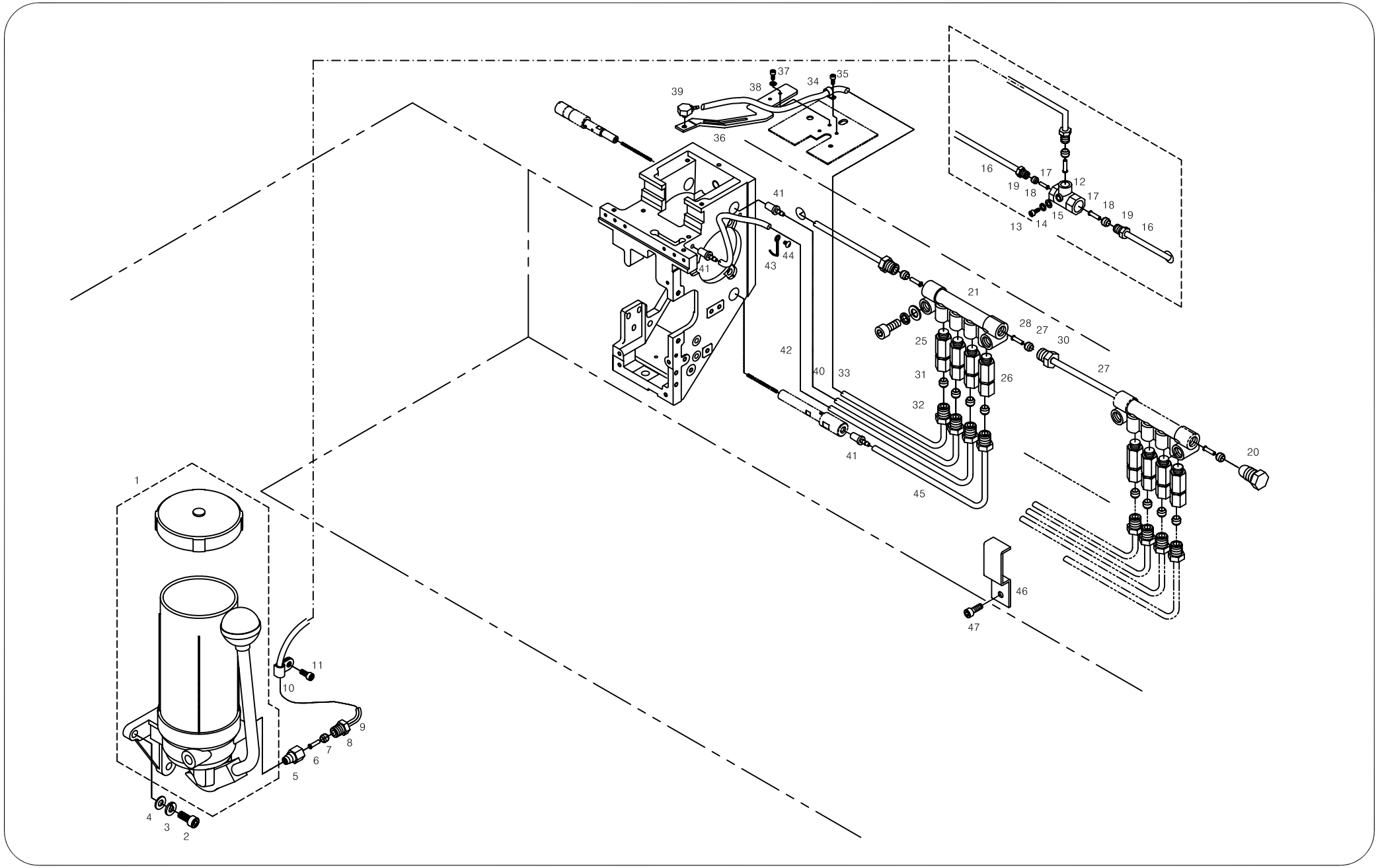

Ref. No	Part No.	Part Names	Q'ty
X-001	01300100H000	Oil Pump Set	1
X-002	14046SC-7113	Hex.Socket Bolt (M6*L30)	3
X-003	03026SW-9115	Spring Washer (@6)	3
X-004	03025SW-1211	Washer (@6)	3
X-005	01300200H000	Oil Pump Adapter	1
X-006	01300300H000	Oil Pump Hose Insert	1
X-007	01300400H000	Oil Pump Compression Sleeve	1
X-008	01300500H000	Oil Pump Compression Bushing	1
X-009	01300600H000	Oil Pump Hose (@4)	1
X-010	15046ET-T121	Wire Holder	2
X-011	02023SC-7113	Hex. Socket Bolt (M4*L8)	2
X-012	01303900H000	Oil Distribution Junction	1
X-013	14046SC-7113	Hex.Socket Bolt (M6*L30)	1
X-014	03026SW-9115	Spring Washer (@6)	1
X-015	03025SW-1211	Washer (@6)	1
X-016	01303800H000	Hose (@4)	2
X-017	01300300H000	Oil Pump Hose Insert	3
X-018	01300400H000	Oil Pump Compression Sleeve	3
X-019	01300500H000	Oil Pump Compression Bushing	3
X-020	01301900H000	Close Plug (M8*1.0)	3
X-021	01302700U000	Mos Metering Valve Junction	15
X-022	14046SC-7113	Hex.Socket Bolt (M6*L30)	30
X-023	03026SW-9115	Spring Washer (@6)	30
X-024	03025SW-1211	Washer (@6)	30
X-025	01300900H000	Mos Metering Valve	15
X-026	01302000H000	Mos Metering Valve (Mos-1)	45
X-028	01300300H000	Oil Pump Hose Insert	28
X-029	01300400H000	Oil Pump Compression Sleeve	28
X-030	01300500H000	Oil Pump Compression Bushing	28
X-031	01301300H000	Bed Oil Compression Sleeve	60
X-032	01301400H000	Bed Oil Compression Bushing	60
X-033	01302900H000	Needle Bar Supply Hose	15
X-034	01303600H000	Needle Bar Oil Hose Holder	15
X-035	05007SC-7113	Hex. Socket Bolt (M3*L5)	15
X-036	01303010H000	Head Oil Hose Guide	15
X-037	05007SC-7113	Hex. Socket Bolt (M3*L5)	30
X-039	01303110H000	Elbow Tube End (E*0.3*2.4)	15
X-040	01303200H000	Take-Up Lever Oil Supply Hose	15
X-041	01301600H000	Hook Oil Supply Nipple	15
X-042	01303300H000	Needle Bar Driving Shaft Hose	15

Ref. No	Part No.	Part Names	Q'ty
X-043	03062ET-A001	Code Clip	
X-044	18033SC-3123	Truss Screw (M5*L6)	
X-045	01303500H000	Neeldle Bar Pin Supply Hose	
X-046	18033PR-UK01	Oil Tube Guide	
X-047	02023SC-7113	Hex. Socket Bolt (M4*L8)	