TTD-97.1004
1/22/97

PARTS LIST

TME-DC

(TYPE D2)

TAJIMA

(9612)

P-CD201-E

Table of Contents

- TME-DC FRAME CD-1
- TME-DC TABLE CD-2-1
- TME-DC AUTO SUB TABLE CD-2-2
- TME-DC MAIN SHAFT DRIVE SYSTEM CD-3
- TME-DC COLOR CHANGE SYSTEM CD-4
- TME-DC ARM I CD-5-1
- TME-DC ARM II CD-5-2
- TME-DC NEEDLE BAR CASE CD-6
- TME-DC KNIFE DRIVE SET & PICKER SET CD-7
- TME-DC UPPER THREAD HOLDER SET CD-8
- TME-DC CAM DRIVE SYSTEM SET CD-9
- TME-DC X-AXIS DRIVE SYSTEM 1 ..... CD-10-1
- TME-DC X-AXIS DRIVE SYSTEM 2 ..... CD-10-2
- TME-DC Y-AXIS DRIVE SYSTEM 1 ..... CD-11-1
- TME-DC Y-AXIS DRIVE SYSTEM 2 ..... CD-11-2
- TME-DC INDIVIDUAL TENSION BASE CD-12
- TME-DC THREAD STAND CD-13
- TME-DC EMBROIDERY FRAME CD-14
- TME-DC POWER SUPPLY BOX CD-15
- TME-DC DRIVER BOX CD-16
- TME-DC CONTROLLER BOX CD-17
- TME-DC MAIN SHAFT MOTOR ASSEMBLY CD-18

[Explanation of Marks #'s and ⁎'s at End of Part No.]

◇ Please specify, in the following manner, your machine model, manufacturing number and embroidery space when you order us with the parts having ⁎⁎⁎⁎⁎ at the end of the part No. :

Ex. : TMFD-612	(450 X 275)S,	No.01234
[Model]	[Emb. Space]	[Mfg.No.]

◇ Please specify the number of needles on your machine's head in your parts order by changing the marks # # # # into one of the 4-digit numbers below:

Ex. : The part Number, EF012345# # # #

4-digit Numbers	Machine Type
0300	3-needle machine
0400	4-needle machine
0600	6-needle machine
0900	9-needle machine
1200	12-needle machine

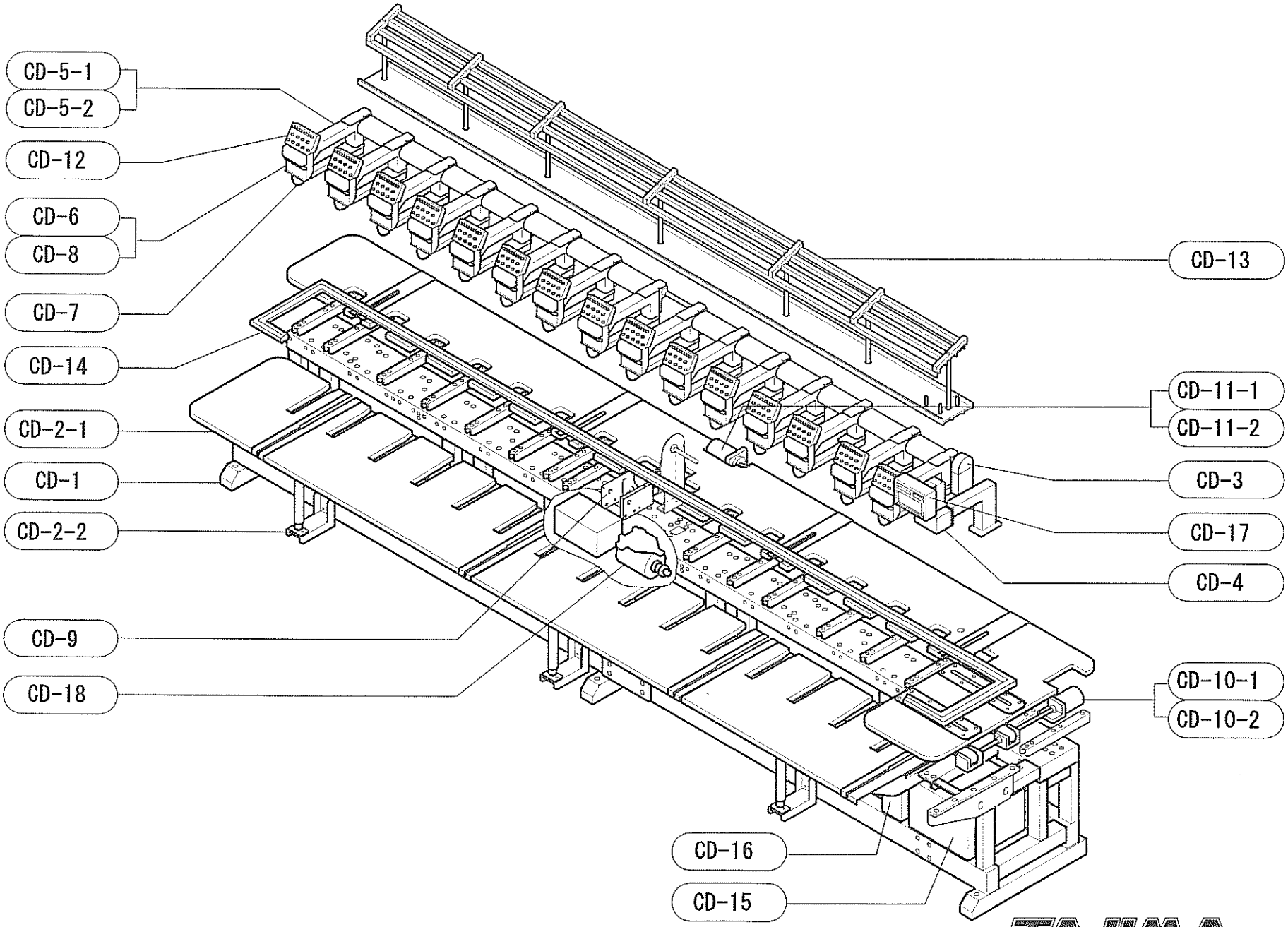
CD-5-1
CD-5-2
CD-12
CD-6
CD-8
CD-7
CD-14
CD-2-1
CD-1
CD-2-2
CD-9
CD-18
CD-13
CD-11-1
CD-11-2
CD-3
CD-17
CD-4
CD-10-1
CD-10-2
CD-16
CD-15

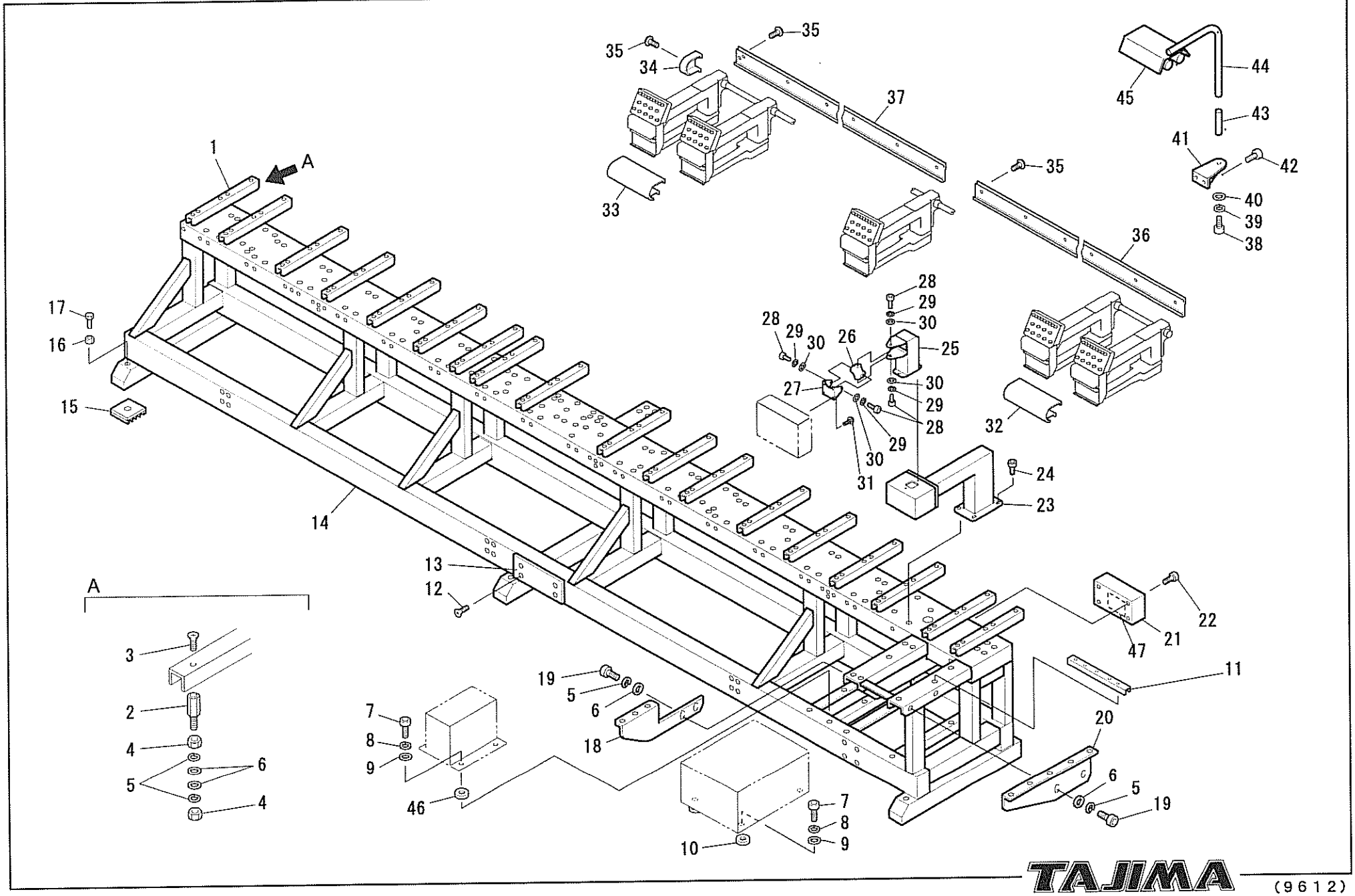
1
A
35
34
37
44
45
43
41
42
40
39
38
36
33
17
16
15
28
29
30
26
25
27
32
24
23
14
13
12
22
21
47
11
20
A
3
2
4
5
6
7
8
9
46
19
18
10

TME-DC FRAME

Ref. No.	Description	Part No.	Remark	Ref. No.	Description	Part No.	Remark
1	No.1 Table Support	CD0A250000000		31	Truss Head Screw	SS0105120SD0	M5*12
2	Table Support Stud	EF1001000000		32	Shaft Cover A	CD0A20A0*****	
3	Countersunk Head Screw	SS1106150SC0	M6*15	33	Shaft Cover C	CD0A20C0*****	
4	Hexagon Nut	SSN008SC0000	M8	34	Arm Shaft Side Cover	CD0A2100000	
5	Spring Washer	WSS080000KC0	M8	35	Truss Head Screw	SS0104050SD0	M4*5
6	Plain Washer	WSP08J016SC0	M8	36	Cover Base A	CD0A19A0*****	
7	Hexagon Socket Head Cap Screw	SS6206250TN0	M6*25	37	Cover Base B	CD0A19B0*****	
8	Plain Washer	WSP06D010SC0	M6	38	High-tensile Hexagon Bolt	SS9310400TN0	M10*40
9	Vibration-preventive Rubber B	EF0833B00000		39	Spring Washer	WSS100000KC0	M10
10	Vibration-preventive Rubber A	EF0833A00000		40	Plain Washer	WSP10S032SC0	M10
11	No.5 Table Support	CD0A5300*****		41	Fluorescent Lamp Pipe Base	ME08100A0000	
12	Countersunk Head Screw	SS1105080SD0	M5*8	42	Hexagon Socket Head Cap Screw	SS6206200TN0	M6*20
13	Model Name Plate	CT0825010000		43	Fluorescent Lamp Pipe Support	EF0813000000	
14	Stand	CD0A0100*****		44	Fluorescent Lamp Stand Pipe	EF0812 0A0000	
15	Vibration-preventive Base	EF0810000000		45	Fluorescent Lamp	EF7401D00000	2-light type
16	Hexagon Nut	SSN020SC0000	M20	45	Fluorescent Lamp	EF7401E00000	1-light type
17	Adjusting Bolt	ME0819000000		45	Fluorescent Lamp	EF7401F00000	3-light type
18	No.3 Table Support	CD0A2700000		45	Fluorescent Lamp	EF7401J00000	4-light type
19	Hexagon Socket Head Cap Screw	SS6208200TN0	M8*20	46	Vibration-preventive Rubber C	FH0833000000	
20	No.2 Table Support	CD0A2600000		47	TC Joint 4 Card	ED7201000000	
21	TC Joint Box	MD7201A10000					
22	Screw with Washer	SSA0051200 00	M5*12				
23	Change Attaching Bracket	CD0D0200####					
24	Hexagon Socket Head Cap Screw	SS6208400TN0	M8*40				
25	Controller Pipe	CD0A0600000					
26	Cross Joint	CX08150A0000					
27	Operation Panel Attaching Arm	EG0104 0A0000					
28	Hexagon Socket Head Cap Screw	SS6208150SD0	M8*15				
29	Spring Washer	WSS080000KD0	M8				
30	Plain Washer	WSP08J016SD0	M8				

Note: As for parts with marks # or *, please follow our instructions on Table of Contents in your parts order.

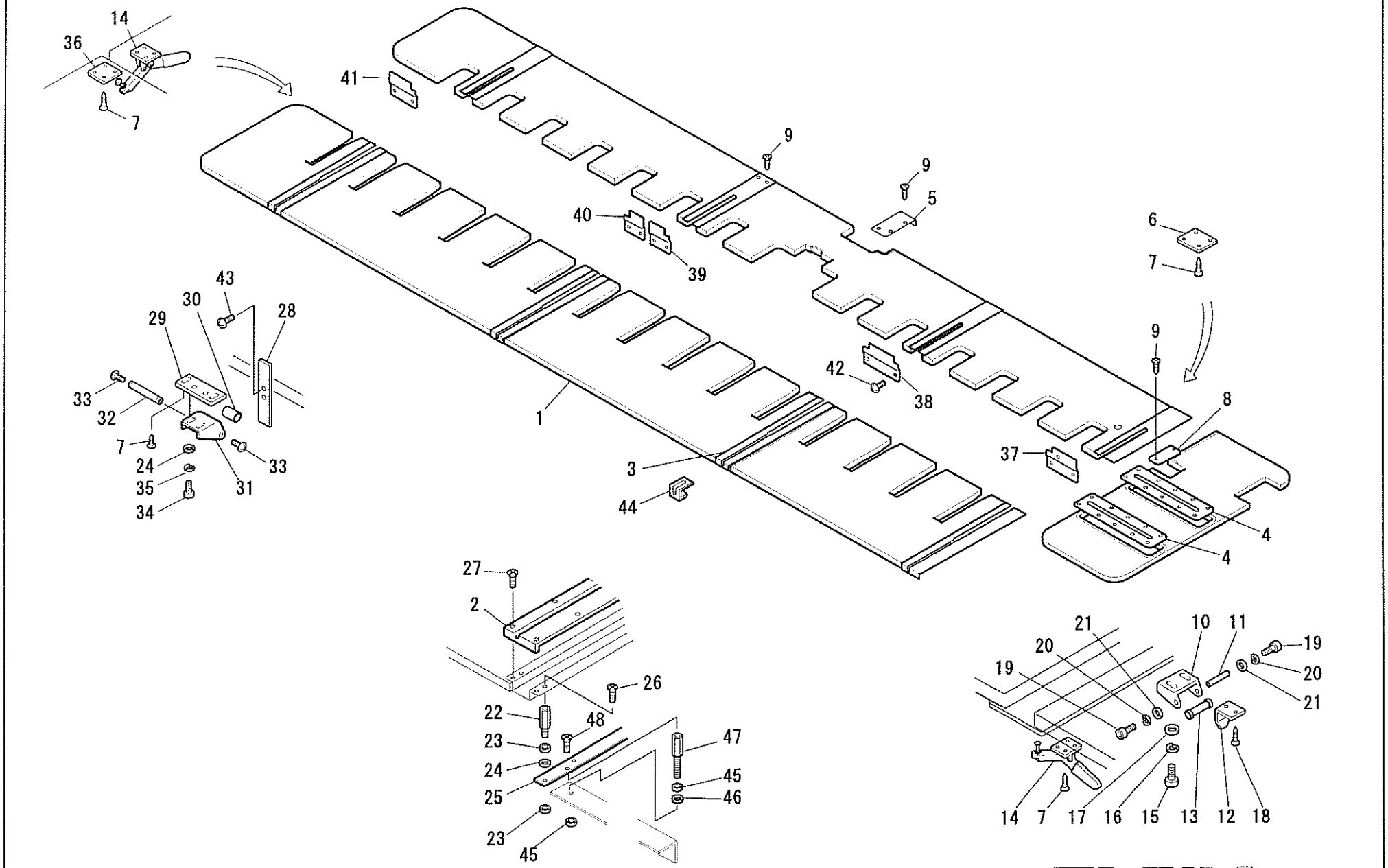
14
36
7
41
9
9
5
40
39
6
7
43
30
28
29
33
32
7
24
35
34
31
33
42
38
9
8
1
37
3
44
4
4
27
2
26
22
48
23
24
25
47
45
46
23
45
21
10
11
19
20
19
20
21
14
7
17
16
15
13
12
18

TME-DC TABLE

Ref. No.	Description	Part No.	Remark	Ref. No.	Description	Part No.	Remark
1	Table	CD0A0200＊＊＊＊		31	Shaft Holder	EF0720020000	
2	No.1 Table Lid A	CD0A07A00000		32	Roller Pin	EF0723010000	
3	No.1 Table Lid B	CD0A07B00000		33	Truss Head Screw	SS0103080SD0	M3＊8
4	No.2 Table Lid	CD0A0800＊＊＊＊		34	Hexagon Socket Head Cap Screw	SS6204060TN0	M4＊6
5	Joint Cover	CT0834000000		35	Spring Washer	WSS040000KC0	M4
6	Table Joint Plate	TC0217000000		36	Clamp Rivet Plate	CM0816000000	
7	Round Head Wood Screw		4.5P＊20	37	Stand Front Cover A	CD0A29A0＊＊＊＊	
8	Table Lid C	CD0A07C00000		38	Stand Front Cover B	CD0A29B0＊＊＊＊	
9	Countersunk Head Wood Screw		3.1P＊16	39	Stand Front Cover C	CD0A29C0＊＊＊＊	
10	Shaft Holder	FC0733000000		40	Stand Front Cover D	CD0A29D0＊＊＊＊	
11	Roller Pin	FC0735000000		41	Stand Front Cover E	CD0A29E0＊＊＊＊	
12	Anti-vibration Plate	XC0526000000		42	Truss Head Screw	SS0105060SD0	M5＊6
13	Roller	FC0734000000		43	Pan Head Screw	SS4105080SD0	M5＊8
14	Toggle Clamp	BPGY1000000		44	Bearing Stopper	FC0841000003T	Right Side
15	Hexagon Socket Head Cap Screw	SS6205100TN0	M5＊10	44	Bearing Stopper	FC0841000006T	
16	Spring Washer	WSS050000KC0	M5	45	Hexagon Nut	SSN008SC0000	M8
17	Plain Washer	WSP05C008SC0	M5	46	Plain Washer	WSP08J016SC0	M8
18	Round Head Wood Screw		5.1P＊25	47	Patch Plate Stud	CD0A490000000	
19	Hexagon Socket Head Cap Screw	SS6203100TN0	M3＊10	48	Countersunk Head Screw	SS1108120SD0	M8＊12
20	Spring Washer	WSS030000KC0	M3				
21	Plain Washer	WSP038005SC0	M3				
22	Reinforcing Stud	CD0B21000000					
23	Hexagon Nut	SSN004SC0000	M4				
24	Plain Washer	WSP04A008SC0	M4				
25	Table Pad	CD0A30000000					
26	Countersunk Head Screw	SS1104080SD0	M4＊8				
27	Countersunk Head Screw	SS1103050SD0	M3＊5				
28	Table Guide Plate	FC0515020000					
29	Anti-bend Base	FC0711000000					
30	Roller	EF0722000000					

Note: As for parts with marks # or ＊, please follow our instructions on Table of Contents in your parts order.

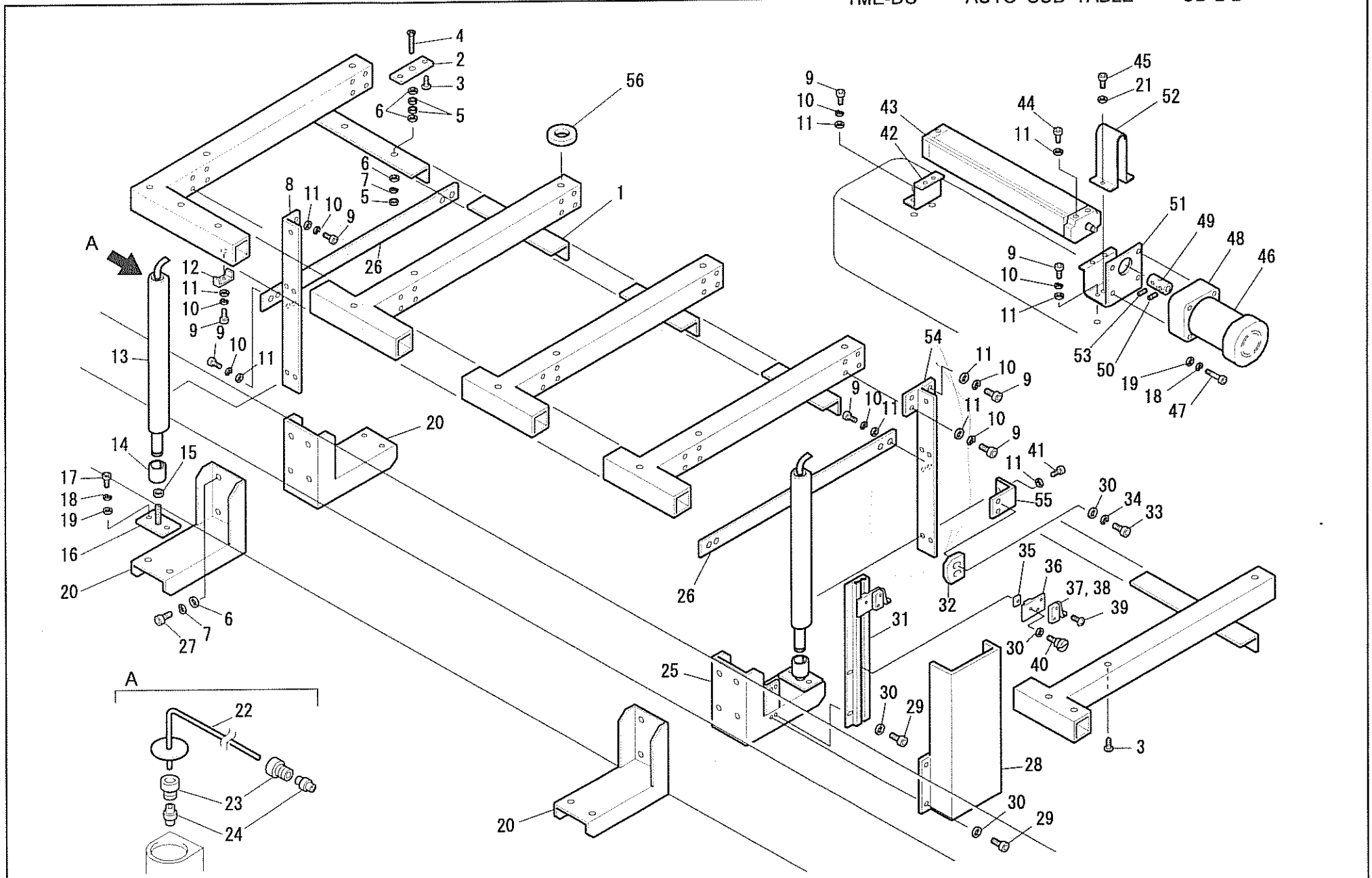
A
A
1
2
3
4
5
6
7
8
9
10
11
12
13
14
15
16
17
18
19
20
21
22
23
24
25
26
27
28
29
30
31
32
33
34
35
36
37, 38
39
40
41
42
43
44
45
46
47
48
49
50
51
52
53
54
55
56

TME-DC AUTO SUB TABLE

Ref. No.	Description	Part No.	Remark	Ref. No.	Description	Part No.	Remark
1	Table Attaching Base	CD0A0300＊＊＊＊		30	Plain Washer	WSP04A008SC0	M4
2	Front Table Holder	FC0523000000		31	Auto Sub Table Switch Base	CD0A170000000	
3	Round Head Wood Screw		5.1P＊25	32	Switch Dog	XC0523000000	
4	Countersunk Head Screw	SS1108700TN0	M8＊70	33	Hexagon Socket Head Cap Screw	SS6204150TN0	M4＊15
5	Hexagon Nut	SSN008SC0000	M8	34	Spring Washer	WSS040000KC0	M4
6	Plain Washer	WSP08J016SC0	M8	35	Fixing Base	EG0730000000	
7	Spring Washer	WSS080000KC0	M8	36	Limit Switch Base A	EG0727A10000	
8	Cylinder Support C	HC0851CA0000		37	Limit Switch	PB001000SP00	
9	Hexagon Socket Head Cap Screw	SS6205150TN0	M5＊15	38	Actuator	MS6602000000	
10	Spring Washer	WSS050000KC0	M5	39	Pan Head Screw	SS4103140SD0	M3＊14
11	Plain Washer	WSP05C008SC0	M5	40	Adjusting Knob	EG0731000000	
12	Pipe Clamp	XC05080A0000		41	Hexagon Socket Head Cap Screw	SS6205120TN0	M5＊12
13	Hydraulic Cylinder	BP1312020000		42	Pump Base B	XC05100A0000	
14	Bolt Cover	XC0525000000		43	Pump	BP1312010000	4-Cylinders
15	Hexagon Nut	SSN010SC0000		43	Pump	BP1312030000	6-Cylinders
16	Cylinder Adjusting Bolt	XC05040A0000		44	Hexagon Socket Head Cap Screw	SS6205550TN0	M5＊55
17	Hexagon Socket Head Cap Screw	SS6206150TN0	M6＊15	45	Hexagon Socket Head Cap Screw	SS6203060TN0	M3＊6
18	Spring Washer	WSS060000KC0	M6	46	Auto Sub Table Motor	PB000400BC00	
19	Plain Washer	WSP06D010SC0	M6	47	Hexagon Socket Head Cap Screw	SS6206800TN1	M6＊80
20	Cylinder Holder A	CD0A15A00000		48	Gear Head	BP5GU125KB00	
21	Plain Washer	WSP038005SC0	M3	49	Joint	XC05110100000	
22	HD Pipe	BPM046251000	4-Cylinders	50	Hexagon Socket Head Set Screw	SS8205100TN0	M5＊10
22	HD Pipe	BPM066251000	6-Cylinders	51	Pump Base A	XC05090A0000	
23	Connecting Screw	BP1315080000		52	Joint Cover	XC05120A0000	
24	Clamping Ring	BP1315100000		53	Hexagon Socket Head Set Screw	SS8205120TN0	M5＊12
25	Cylinder Holder B	CD0A15B00000		54	Cylinder Support A	HC0851AA0000	
26	Cylinder Joint	CD0A18000000		55	Switch Dog Base	HC08310A0000	
27	Hexagon Socket Head Cap Screw	SS6208200TN0	M8＊20	56	Table Spacer	CD0A24000000	
28	Switch Cover	CD0A16000000					
29	Hexagon Socket Head Cap Screw	SS6204080TN0	M4＊8				

Note: As for parts with marks # or ＊, please follow our instructions on Table of Contents in your parts order.

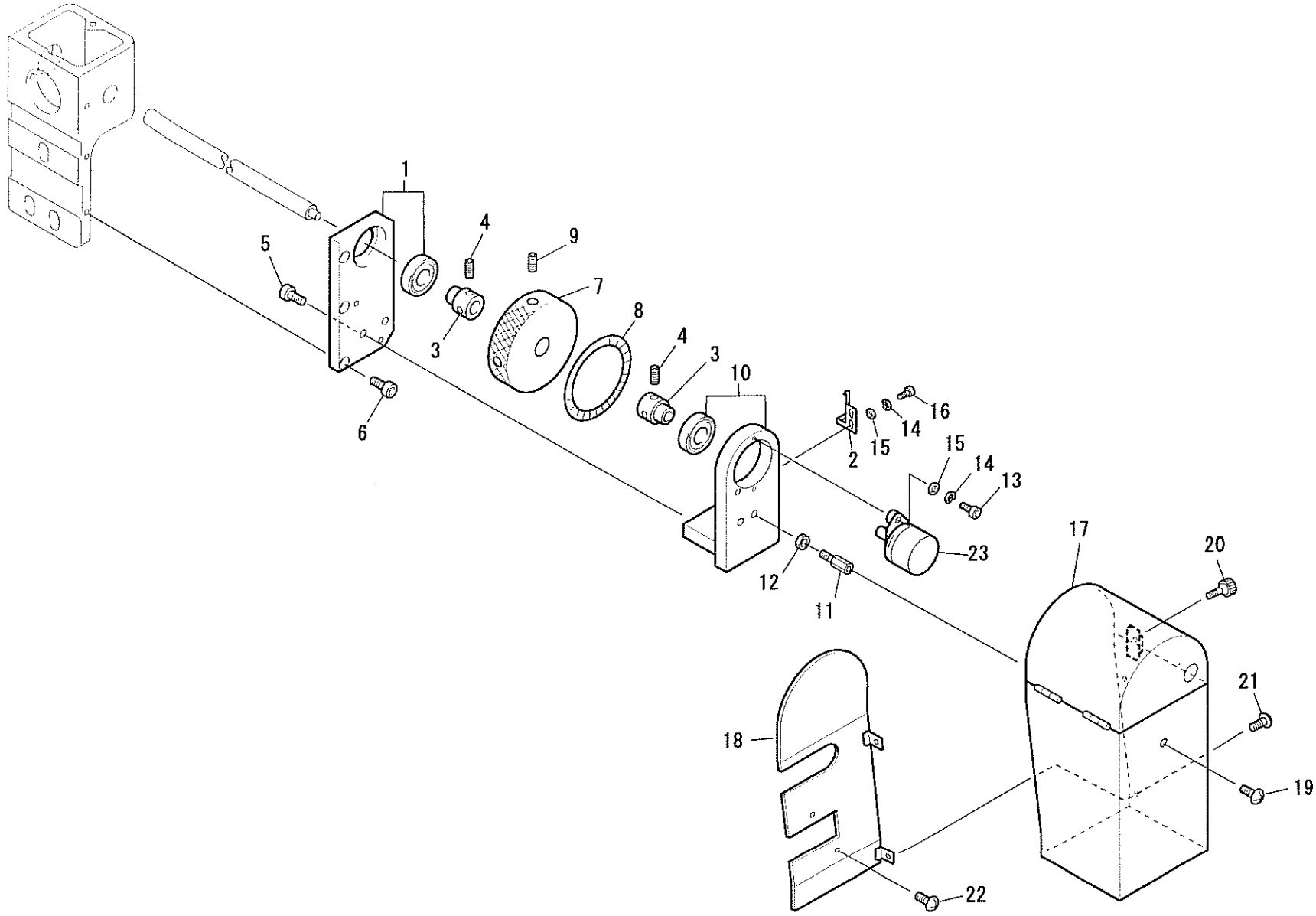
1
2
3
4
5
6
7
8
9
10
11
12
13
14
15
16
17
18
19
20
21
22
23

TME-DC MAIN SHAFT DRIVE SYSTEM

Ref. No.	Description	Part No.	Remark	Ref. No.	Description	Part No.	Remark
1	Bearing Case Plate	CD0A430000000					
2	Angle Pointer	CD0A330000000					
3	Bearing Bushing	ME0203000000					
4	Hexagon Socket Head Set Screw	SS820608 0TN0	M6*8				
5	Hexagon Socket Head Cap Screw	SS6206120TN0	M6*12				
6	Hexagon Socket Head Cap Screw	SS6206100TN0	M6*10				
7	Angle Pointer Plate Pulley	CD0A350000000					
8	Angle Indicator Plate	CD0A360000000					
9	Hexagon Socket Head Set Screw	SS820808 0TN0	M8*8				
10	Bearing Case Arm	CD0A320000000					
11	Pulley Cover Stud	ME0205000000					
12	Hexagon Nut	SSN006SC0000	M6				
13	Hexagon Socket Head Cap Screw	SS6203100TN0	M3*10				
14	Spring Washer	WSS030000KC0	M3				
15	Plain Washer	WSP038005SC0	M3				
16	Hexagon Socket Head Cap Screw	SS6203080TN0	M3*8				
17	Angle Pointer Plate Cover A	CD0A40A00000					
18	Angle Pointer Plate Cover B	CD0A40B00000					
19	Truss Head Screw	SS0105080SD0	M5*8				
20	Cover Fixing Knurled Screw	EF0306000000					
21	Truss Head Screw	SS0104050SD0	M4*5				
22	Truss Head Screw	SS0105100SD0	M5*10				
23	Rotary Encoder	EF6600000000					

Note: As for parts with marks # or *, please follow our instructions on Table of Contents in your parts order.

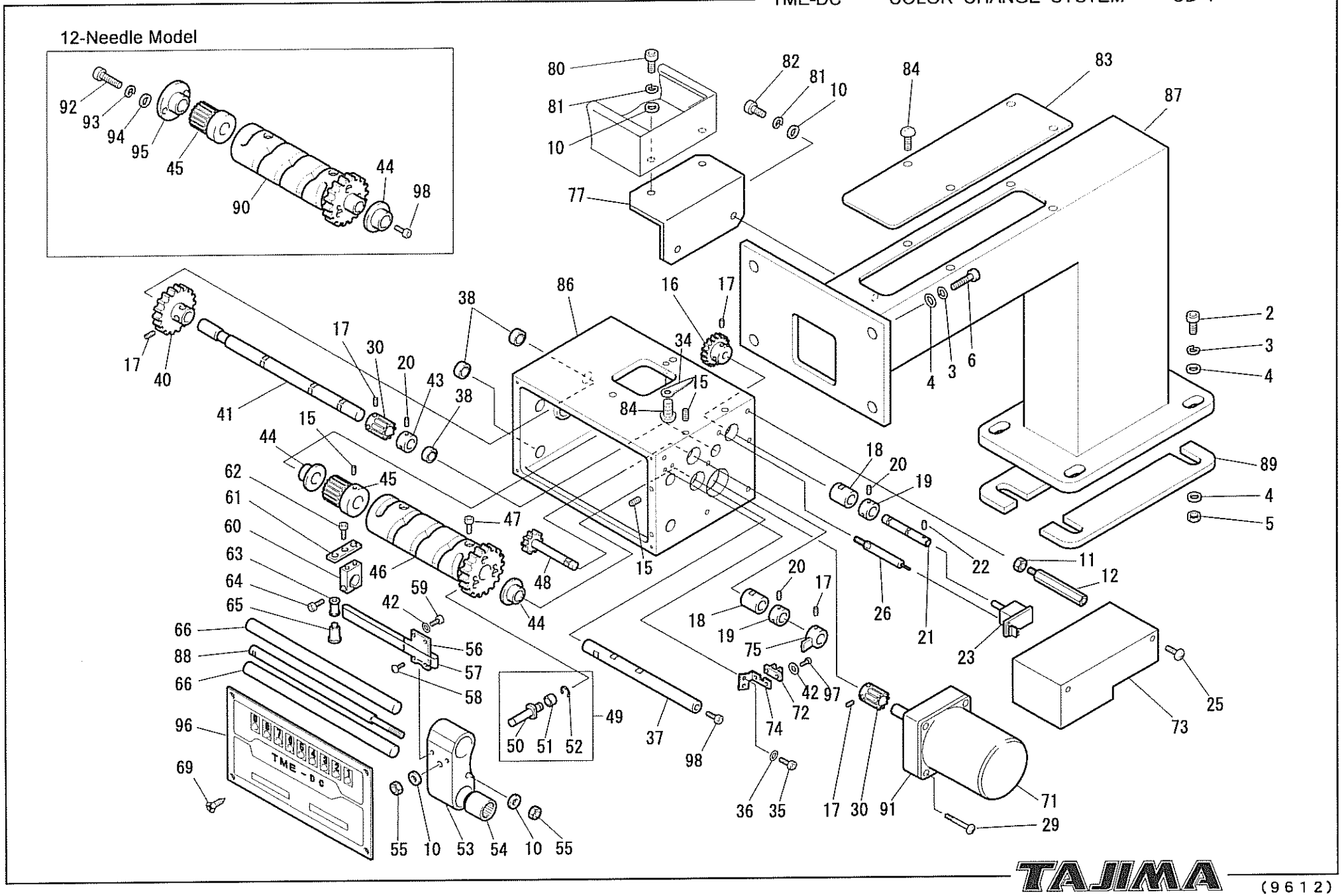
12-Needle Model
TME-DC

TME-DC COLOR CHANGE SYSTEM

Ref. No.	Description	Part No.	Remark	Ref. No.	Description	Part No.	Remark
2	Hexagon Socket Head Cap Screw	SS620830 0TN0	M8*30	44	Cam Shaft Bushing	EF0407000000	
3	Spring Washer	WSS080000KC0	M8	45	Middle Gear A	MS0410000000	
4	Plain Washer	WSP08J016SC0	M8	46	Color Change Cam Set	EF040501####	
5	Hexagon Nut	SSN008SC0000	M8	47	Hexagon Socket Head Cap Screw	SS620608 0TN0	M6*8
6	Hexagon Socket Head Cap Screw	SS620825 0TN0	M8*25	48	Half-turn Gear	EF0414000000	
10	Plain Washer	WSP06D01SC00	M6	49	Cam Roller Set	EF0404S00000	
11	Hexagon Nut	SSN005SC0000	M5	50	Cam Pin	EF0403000000	
12	Change Cover Stud	MS0414000000		51	Cam Roller	EF0404000000	
15	Hexagon Socket Head Set Screw	SS820406 0TN0	M4*6	52	E-ring	BPE3000000000	
16	Rotary Switch Gear	MS0408000000		53	Slide Boss	EF0402010000	
17	Hexagon Socket Head Set Screw	SS820506 0TN0	M5*6	54	Slide Bearing	BPLME1222322	
18	Half-turn Gear Bushing	EF0415000000		55	Hexagon Nut	SSN006SC0000	M6
19	8mm Dia. Collar	EF0418000000		56	Belt Joint Plate	EF0429000000	
20	Hexagon Socket Head Set Screw	SS820405 0TN0	M4*5	57	Needle Position Indicating Belt	EF0426 10####	
21	Rotary Switch Pin	MS0407000000		58	Pan Head Screw	SS410406 0SD0	M4*6
22	Hexagon Socket Head Set Screw	SS820305 0TN0	M3*5	59	Hexagon Socket Head Cap Screw	SS620304 0TN0	M3*4
23	Rotary Switch	MS7102010000		60	Base Split Collar	EF0430000000	
25	Truss Head Screw	SM010905SA00	9/64*40*5	61	Roller Base	EF0427000000	
26	Rotary Switch Stay	MS0409000000		62	Hexagon Socket Head Cap Screw	SS620306 0TN0	M3*6
29	Pan Head Screw	SS410550 0SD1	M5*50	63	Roller	EF0425000000	
30	Motor Gear	EF0410000000		64	Hexagon Socket Head Cap Screw	SS620315 0TN0	M3*15
34	Coated Clip	PB002200EB00		65	Roller Pin	EF0428000000	
35	Hexagon Socket Head Cap Screw	SS620408 0TN0	M4*8	66	Guide Shaft	EF040800####	
36	Plain Washer	WSP04A008SC0	M4	69	Round Countersunk Head Screw	SM200906SA00	9/64*40*6
37	Cam Shaft	MS040200####		71	Color Change Motor	EG7101003R15	
38	Dry Bearing	BPMB1010DU00		72	Photo-interrupter	EG7102000000	
40	Middle Gear B	MS0411000000		73	Change Cover	MC04010A0000	
41	Middle Shaft	FX040200####		74	Photo-interrupter Base	EG0402000000	
42	Plain Washer	WSP038005SC0	M3	75	One-rotation Switch Collar	EG0401010000	
43	10mm Dia. Collar	EF0924000000		77	Wiring Duct Bracket	EH0905 0A0000	

Note: As for parts with marks # or *, please follow our instructions on Table of Contents in your parts order.

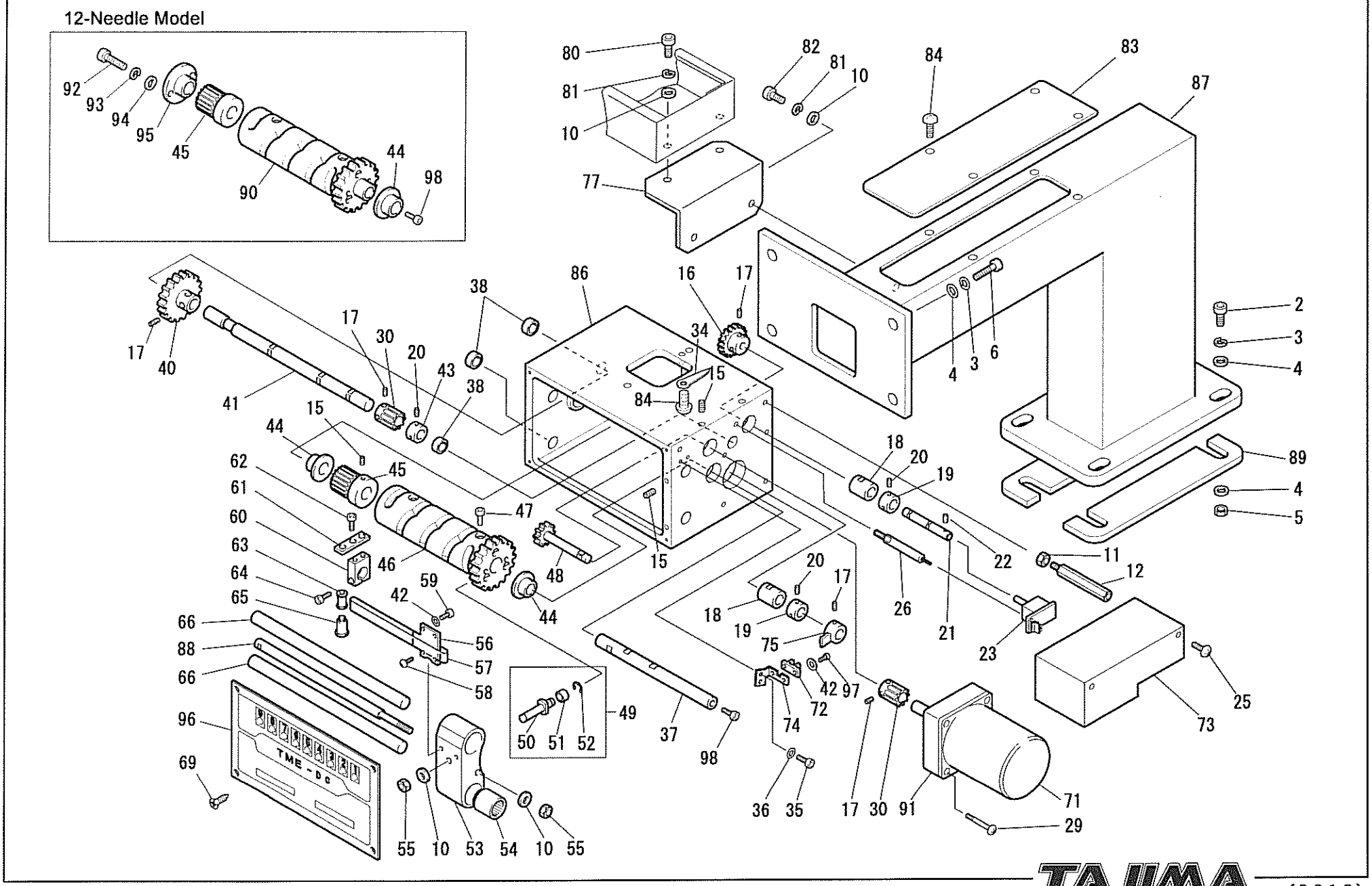
12-Needle Model
92
93
94
95
45
90
44
98
80
81
10
77
82
81
10
84
83
87
86
38
16
17
17
30
20
43
38
34
15
84
15
44
45
62
61
60
63
64
65
66
88
66
96
69
17
40
41
47
46
48
44
59
42
56
57
58
49
50
51
52
37
98
55
10
53
54
10
55
TME-DC
2
3
4
4
3
6
89
4
5
18
20
19
22
11
12
26
21
23
20
17
18
19
75
42
97
72
74
36
35
17
30
91
71
29
25
73

TME-DC COLOR CHANGE SYSTEM

Ref. No.	Description	Part No.	Remark	Ref. No.	Description	Part No.	Remark
80	Hexagon Socket Head Cap Screw	SS6206120TN0	M6*12				
81	Spring Washer	WSS060000KC0	M6				
82	Hexagon Socket Head Cap Screw	SS6206200TN0	M6*20				
83	Change Bracket Lid	CD04030A0000					
84	Truss Head Screw	SS0104080SD0	M4*8				
86	Color Change Box	CD0D0100****					
87	Change Box Attaching Bracket	CD0D0200####					
88	Slide Shaft	CD0D0300####					
89	Bracket Spacer	CD0D0400####					
90	Change Cam	EF0405020000	12-Needle				
91	Gear Head	EG7101003G09					
92	Hexagon Socket Head Cap Screw	SS6205100TN0	M5*10				
93	Spring Washer	WSS050000KC0	M5				
94	Plain Washer	WSP05C008SC0	M5				
95	Cam Shaft Bushing B	FX0403000000					
96	Model Name Plate	CD0D0500****					
97	Hexagon Socket Head Cap Screw	SS6203080TN0	M3*8				
98	Hexagon Socket Head Cap Screw	SS6206100TN0	M6*10				

Note: As for parts with marks # or *, please follow our instructions on Table of Contents in your parts order.

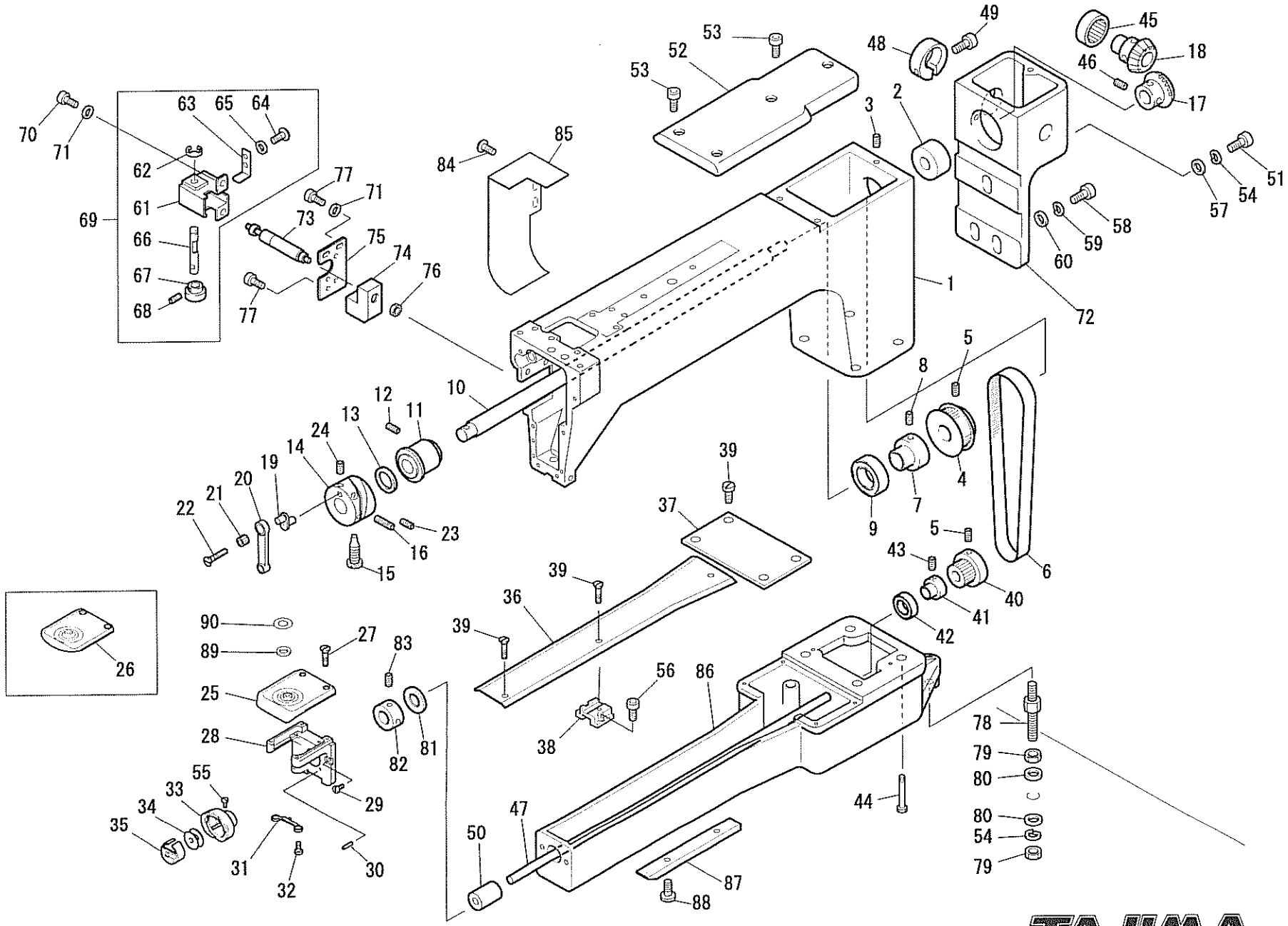
1
2
3
4
5
6
7
8
9
10
11
12
13
14
15
16
17
18
19
20
21
22
23
24
25
26
27
28
29
30
31
32
33
34
35
36
37
38
39
40
41
42
43
44
45
46
47
48
49
50
51
52
53
54
55
56
57
58
59
60
61
62
63
64
65
66
67
68
69
70
71
72
73
74
75
76
77
78
79
80
81
82
83
84
85
86
87
88
89
90

TME-DC ARM I

Ref. No.	Description	Part No.	Remark	Ref. No.	Description	Part No.	Remark
1	Arm	EC0A010000000		31	Rotary Hook Support	FC0224000000	
2	Arm Shaft Bushing, Rear	EC0A370000000		32	Round Fillister Head Screw	SM670205 60CN	9/64*40*6
3	Hexagon Socket Head Set Screw	SS820404 0TN0	M4*4	33	Rotary Hook	ME050504****	
4	Upper Shaft Pulley	EC0A400000000		34	Bobbin	ME050402****	
5	Hexagon Socket Head Set Screw	SS820510 0TN0	M5*10	35	Bobbin Case	ME050300****	
6	Timing Belt	BP150S5M525G		36	Bed Cover B	EC0C100000000	
7	Bearing Collar B	EC0A450000000		37	Bed Cover A	EC0C090000000	
8	Hexagon Socket Head Set Screw	SS820508 0TN0	M5*8	38	Bed Cover Stud A	EC0C020000000	
9	Ball Bearing	BP6004ZZ0000		39	Flat Fillister Head Screw	SM165165 40SA	9/64*40*4
10	Arm Shaft	CD0E020000000		40	Lower Shaft Pulley	EC0C120000000	
11	Arm Shaft Bushing, Front	ME052300000000		41	Bearing Collar A	EC0C110000000	
12	Slotted Set Screw	SMK0000AH0CN	15/64*28*17	42	Ball Bearing	BP6201ZZ0000	
13	Quenched Spacer	ME052500000000		43	Hexagon Socket Head Set Screw	SS820506 0TN0	M5*6
14	Take-up Lever Drive Cam	EC0A470000000		44	Hexagon Bolt	SS931030 0SC0	M10*30
15	Cam Set Screw	ME056000000000		45	Needle Bearing	BPHK251200000	
16	Slotted Set Screw	SMK0000AA0CN	15/64*28*10	46	Hexagon Socket Head Set Screw	SS820606 0TN0	M6*6
17	Arm Shaft Bevel Gear B	ME055000000000		47	Oscillating Shaft	EC0C130000000	
18	Arm Shaft Drive Bevel Gear	ME055100000000		48	Gear Stopper Split Collar	ME055200000000	
19	90-degrees Crank	ME053801000000		49	Hexagon Socket Head Cap Screw	SS620515 0TN0	M5*15
20	Connecting Rod	ME052800000000		50	Shaft Bushing, Front	FC0230000000	
21	Needle Cage	BPN79A048000		51	Hexagon Socket Head Cap Screw	SS620830 0TN0	M8*30
22	Countersunk Head Screw, Counterclockwise	ME056900000000	9/64*40*7	52	Arm Top Cover	CD0E040100000	
23	Slotted Set Screw	SMK0000B80CN	1/4*40*8	53	Hexagon Socket Head Cap Screw	SS620415 0TN0	M4*15
24	Slotted Set Screw	SMK0000B50CN	1/4*40*5	54	Spring Washer	WSS080000KC0	M8
25	Model Name Plate	FC020401****	Border / Tubular	55	Rotary Hook Set Screw	ME050600000000	
26	Model Name Plate	EC0C190000000	Wide Cap Frame	56	Flat Fillister Head Screw	SM150205 80CN	9/64*40*15
27	Round Countersunk Head Screw	EG022800000000		57	Plain Washer	WSP08J016SC0	M8
28	Needle Bracket	FC020201 0000		58	Hexagon Socket Head Cap Screw	SS620630 0TN0	M6*30
29	Round Fillister Head Screw	SM675256F0CN	11/64*40*15	59	Spring Washer	WSS060000KC0	M6
30	Spring Pin		3P*12	60	Plain Washer	WSP06D010SC0	M6

Note: As for parts with marks # or *, please follow our instructions on Table of Contents in your parts order.

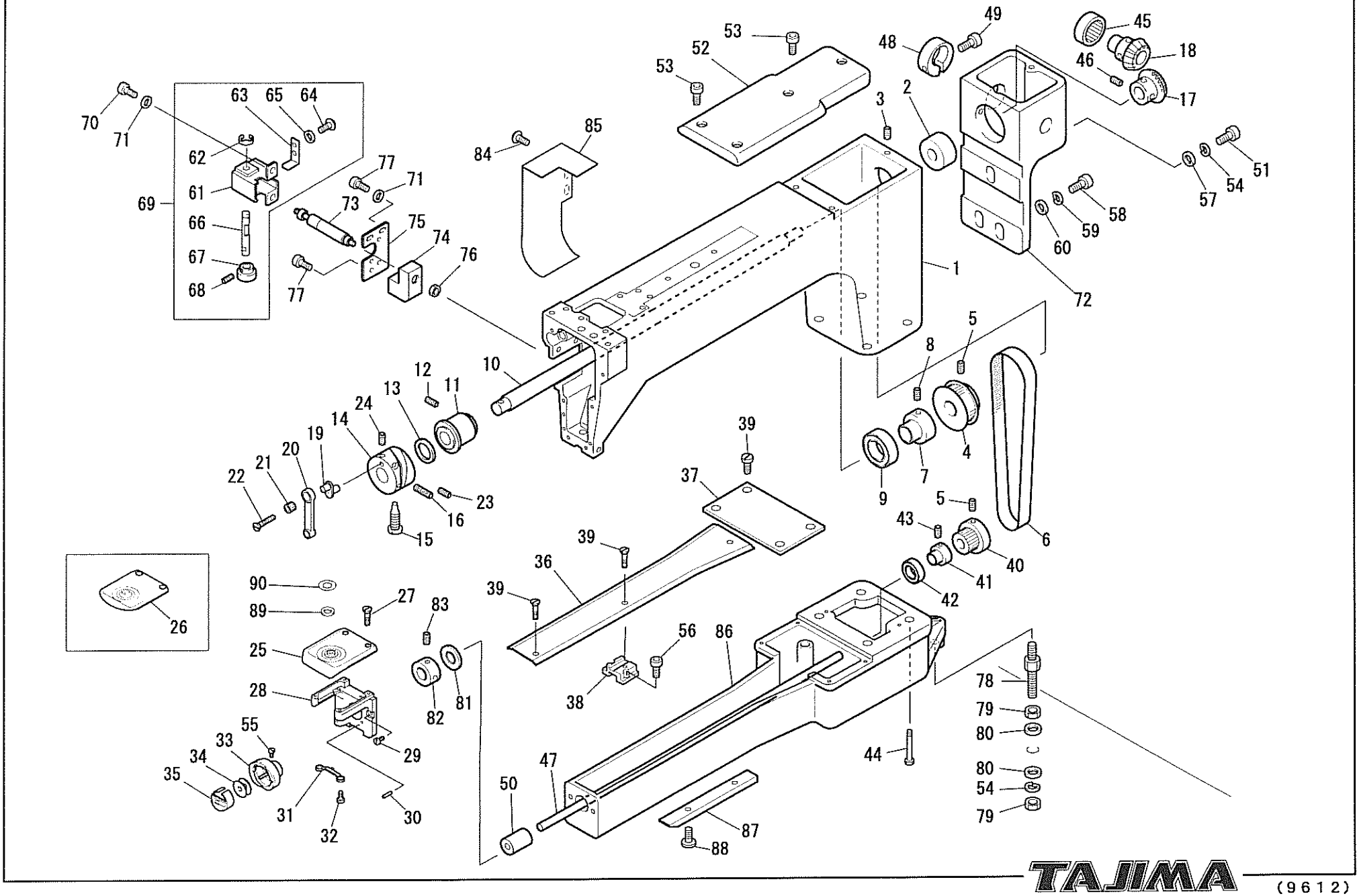
1
2
3
4
5
6
7
8
9
10
11
12
13
14
15
16
17
18
19
20
21
22
23
24
25
26
27
28
29
30
31
32
33
34
35
36
37
38
39
40
41
42
43
44
45
46
47
48
49
50
51
52
53
54
55
56
57
58
59
60
61
62
63
64
65
66
67
68
69
70
71
72
73
74
75
76
77
78
79
80
81
82
83
84
85
86
87
88
89
90

TME-DC ARM I

Ref. No.	Description	Part No.	Remark	Ref. No.	Description	Part No.	Remark
61	Solenoid Cover	ME05430A0000		89	Needle Plate Hole Collar	EF0202200000	
62	E-ring	BPE5000000000		90	Needle Plate Hole Seal	EF0202300000	
63	Stopper Plate Spring	ME0544000000					
64	Pan Head Screw	SS4103040SD0	M3*4				
65	Plain Washer	WSP038005SC0	M3				
66	Clutch Pin	EF0540000000					
67	Clutch Knurled Screw	EF0539000000					
68	Hexagon Socket Head Set Screw	SS8203030TN0	M3*3				
69	Solenoid Cover Set	ME0543SA0000					
70	Hexagon Socket Head Cap Screw	SS6204060TN0	M4*6				
71	Plain Washer	WSP04A008SC0	M4				
72	Shaft Holder Box A	CD0E01A00000					
72	Shaft Holder Box B	CD0E01B00000	MotorLeftSide,1H				
72	Shaft Holder Box C	CD0E01C00000	Motor Right Side				
73	Jump Solenoid	EG6801020000					
74	Solenoid Bracket	CD0E06000000					
75	Bracket Base	CD0E05000000					
76	Hexagon Nut	EG0548000000					
77	Hexagon Socket Head Cap Screw	SS6204080TN0	M4*8				
78	Rotary Hook Base Stud	EF0207000000					
79	Hexagon Nut	SSN008SC0000	M8				
80	Plain Washer (Large)	WSP08N032SC0	M8				
81	Rotary Hook Spacer	EF0211000000					
82	7.94mm Dia. Collar	EF0209000000					
83	Hexagon Socket Head Set Screw	SMJ000064 0CN	11/64*40*4				
84	Truss Head Screw	SS0104080SD0	M4*8				
85	Arm Side Cover	CD0E14000000					
86	Arm Bed	EC0C15000000					
87	Bed Rail	EC0G11000000					
88	Flat Fillister Head Screw	SM601112SC00	11/64*40*12				

Note: As for parts with marks # or *, please follow our instructions on Table of Contents in your parts order.

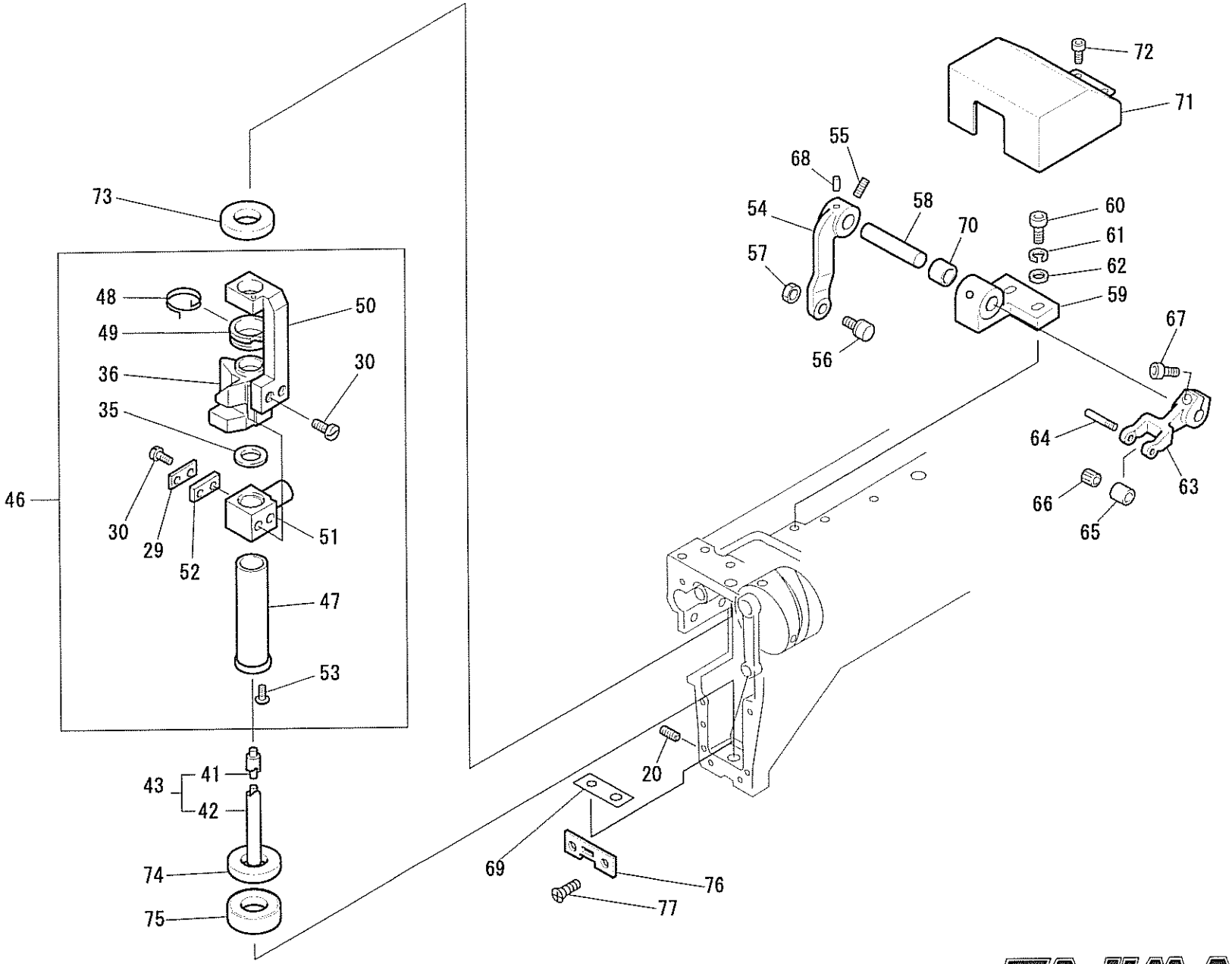
72
71
55
68
73
54
58
60
70
61
57
62
59
48
50
49
67
36
30
35
64
46
30
29
52
51
63
66
65
47
53
20
43
41
42
69
76
74
77
75

TME-DC ARM II

Ref. No.	Description	Part No.	Remark	Ref. No.	Description	Part No.	Remark
20	Hexagon Socket Head Set Screw	SS820510 0TN0	M5*10	68	Taper Pin		3P*15
29	Stopper Bracket	EF0534000000		69	Oil Fencing Felt	EC0A540000000	
30	Flat Fillister Head Screw	SM600806SC00	1/8*44*6	70	Shaft Holder Bushing	EC0A520000000	
35	Needle Bar Reciprocator Spacer	EF0554000000		71	Take-up Lever Drive Gear Cover	CD0E110000000	
36	Needle Bar Reciprocator	EF0532010000		72	Hexagon Socket Head Cap Screw	SS620508 0TN0	M5*8
41	Needle Bar Drive Shaft Wick	EG0536000000		73	Needle Bar Drive Shaft Felt A	FX0561000000	
42	Needle Bar Drive Shaft	FX0522020000		74	Needle Bar Drive Shaft Felt B	FX0562000000	
43	Needle Bar Drive Shaft Set	FX0522S20000		75	Bearing Case Collar	ME0555000000	
46	Needle Bar Reciprocator (Set)	UN2502400000	Split ME Type	76	Arm Guide Plate	EC0A530000000	
47	Needle Bar Drive Shaft Bushing	ME0566000000		77	Round Countersunk Head Screw	SMC500057 0CL	9/64*40*7
48	Jump Spring	FX0516000000					
49	Spring Cradle	FX0564000000					
50	Connecting Arm	ME0565000000					
51	Reciprocator Connecting Stud	ME0564000000					
52	Stopper	EF0561000000					
53	Truss Head Screw	SS0175030SD0	M2.5*3				
54	Take-up Lever Drive Lever	EC0A460000000					
55	Hexagon Socket Head Set Screw	SS820404 0TN0	M4*4				
56	Cam Roller Set	ME0534S00000					
57	Hexagon Nut	SSN205SC0000	M5 Type 3				
58	Take-up Lever Arm Pin	ME0535000000					
59	Take-up Lever Drive Shaft Base	EC0A360000000					
60	Hexagon Socket Head Cap Screw	SS620512 0TN0	M5*12				
61	Spring Washer	WSS050000KC0	M5				
62	Plain Washer	WSP05C008SC0	M5				
63	Take-up Lever Drive Lever B	EC0A480000000					
64	Roller Pin	CL0577000000					
65	8mm Dia. Roller	CL0578000000					
66	Needle Cage	BPKT367N0000					
67	Hexagon Socket Head Cap Screw	SS620410 0TN0	M4*10				

Note: As for parts with marks # or *, please follow our instructions on Table of Contents in your parts order.

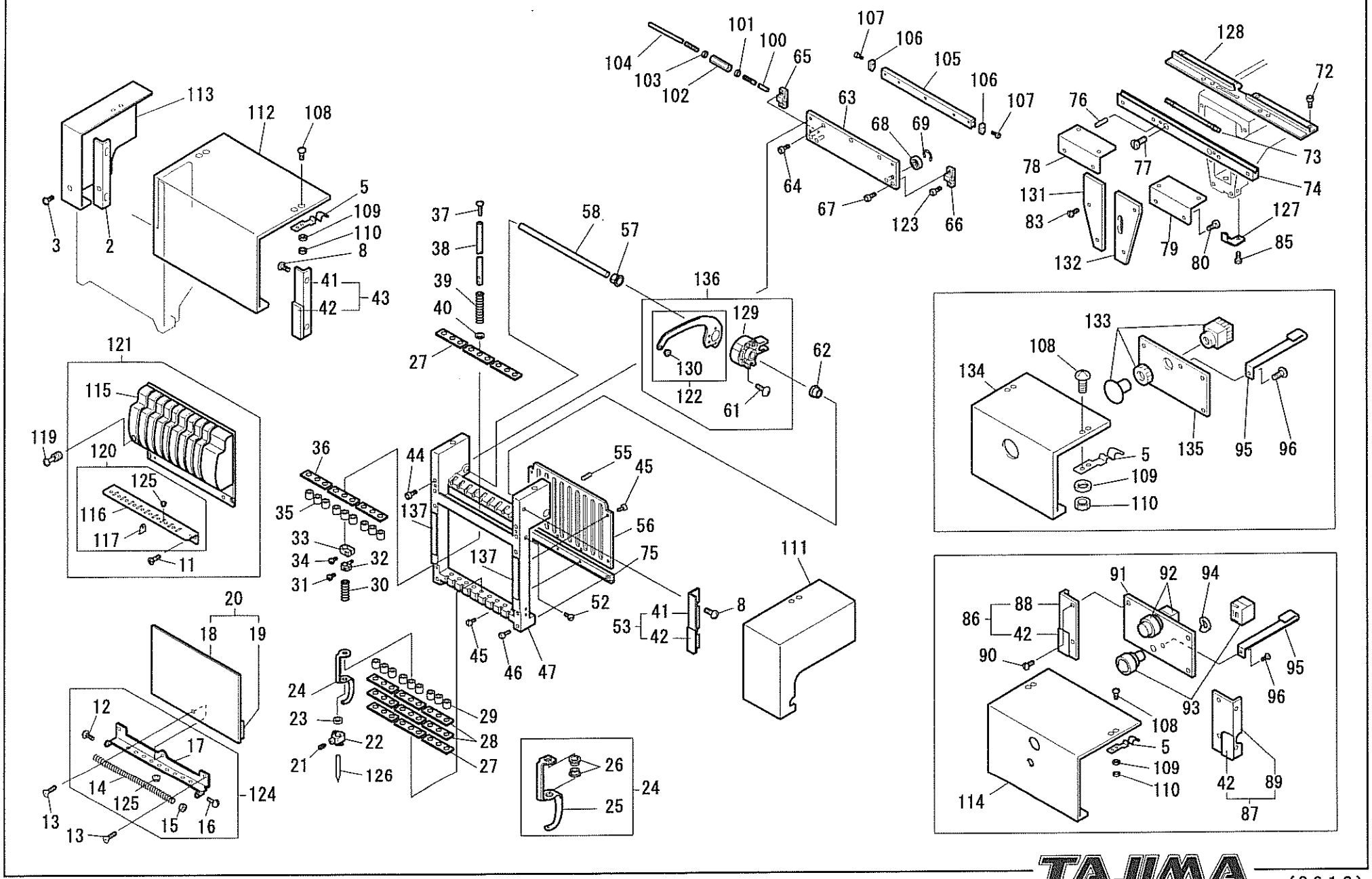
113
112
108
3
2
5
109
110
8
41
42
43
37
38
39
40
27
58
57
136
129
130
122
61
62
101
100
104
103
102
65
63
107
106
105
106
107
64
68
69
67
123
66
128
72
76
73
78
77
74
131
83
127
79
80
85
132
121
115
119
120
125
116
117
11
36
35
33
34
32
31
30
44
137
137
55
45
56
75
52
41
42
53
8
45
46
47
111
20
18
19
12
17
14
125
13
13
15
16
124
24
23
22
21
126
29
28
27
26
25
24
133
108
134
5
109
110
135
95
96
91
92
94
86
88
42
90
95
96
93
108
5
109
110
114
42
89
87

TME-DC NEEDLE BAR CASE

Ref. No.	Description	Part No.	Remark	Ref. No.	Description	Part No.	Remark
2	Cover Attaching Bracket C	FX0628C20000		36	Cushion Rubber B	EF062700####	
3	Truss Head Screw	SM010904SD00	9/64*40*4	37	Holding Spring Set Screw	EF0620000000	
5	Cover Plate Spring	FX0805010000		38	Needle Bar	FX0632000000	
6	Truss Head Screw	SM010906SD00	9/64*40*6	39	Needle Bar Holder Spring	ME0601020000	
11	Round Countersunk Head Screw	SM200904SB00	9/64*40*4	40	Spring Shoe Washer	EF0619000000	
12	Pan Head Screw	SS410408SD0	M4*8	41	Cover Attaching Bracket	FX0628030000	
13	Round Countersunk Head Screw	SM200906SD00	9/64*40*6	42	Plate Magnet	FX0628200000	
14	Thread Hook Spring	EF063100####		43	Cover Attaching Bracket L	FX0628L30000	
15	Hexagon Nut	EF0646000000	M4 Type 3	44	Hexagon Socket Head Cap Screw	SS620418 0TN0	M4*18
16	Pan Head Screw	SS410415 0SD0	M4*15	45	Flat Fillister Head Screw	SM600906SC00	9/64*40*6
17	Lower Thread Guide	FX062601####		46	Hexagon Socket Head Cap Screw	SS620425 0TN0	M4*25
18	Face Plate	EC060111####		47	Needle Bar Case	FX06010A####	
19	Magnet Rubber	FX062421####		52	Round Fillister Head Screw	SM700904SB00	9/64*40*4
20	Face Plate Set	EC060101####		53	Cover Attaching Bracket R	FX0628R30000	
21	Needle Set Screw	EF0615000000		55	Hexagon Socket Head Set Screw	SS820506 0TN0	M5*6
22	Needle Clamp	EF0616000000		56	Needle Bar Guide Rail	FX061302####	
23	Cushion Ring A	EF0642020000		57	Take-up Lever Positioning Bushing	EF0606000000	
24	Presser Foot Set	EF0613030000		58	Take-up Lever Shaft	EF060200####	
25	Presser Foot	EF0613130000		61	Pan Head Screw	SS410310 0SD0	M3*10
26	Presser Foot Bushing	EF0613220000		62	Take-up Lever Adjusting Bushing	EF0605000000	
27	Felt Packing	EF062300####		63	Guide Roller Base	FX060700####	
28	Presser Foot Adjusting Rubber	EF0625A0****	0.5t	64	Hexagon Socket Head Cap Screw	SS620408 0TN0	M4*8
28	Presser Foot Adjusting Rubber	EF0625B0****	1t	65	Color Change Bracket L	FX0609L00000	
29	Cushion Ring D	ME0602000000		66	Color Change Bracket R	FX0609R00000	
30	Presser Foot Spring C	ME0603000000		67	Change Bracket Set Screw	FX0611000000	
31	Flat Fillister Head Screw	SM600907SC00	9/64*40*7	68	Ball Bearing	BPR1340ZZ000	
32	Needle Bar Connecting Stud	FX0617000000		69	E-ring	BPE3000000000	
33	Upper Dead Point Stopper	EF0617010000		72	Flat Fillister Head Screw	SM600905CC00	9/64*40*5
34	Flat Fillister Head Screw	EF0647000000	9/64*40*12	73	Slide Roller	EF055300####	
35	Cushion Ring B	EF0643010000		74	Arm Rail	ME054500####	

Note: As for parts with marks # or *, please follow our instructions on Table of Contents in your parts order.

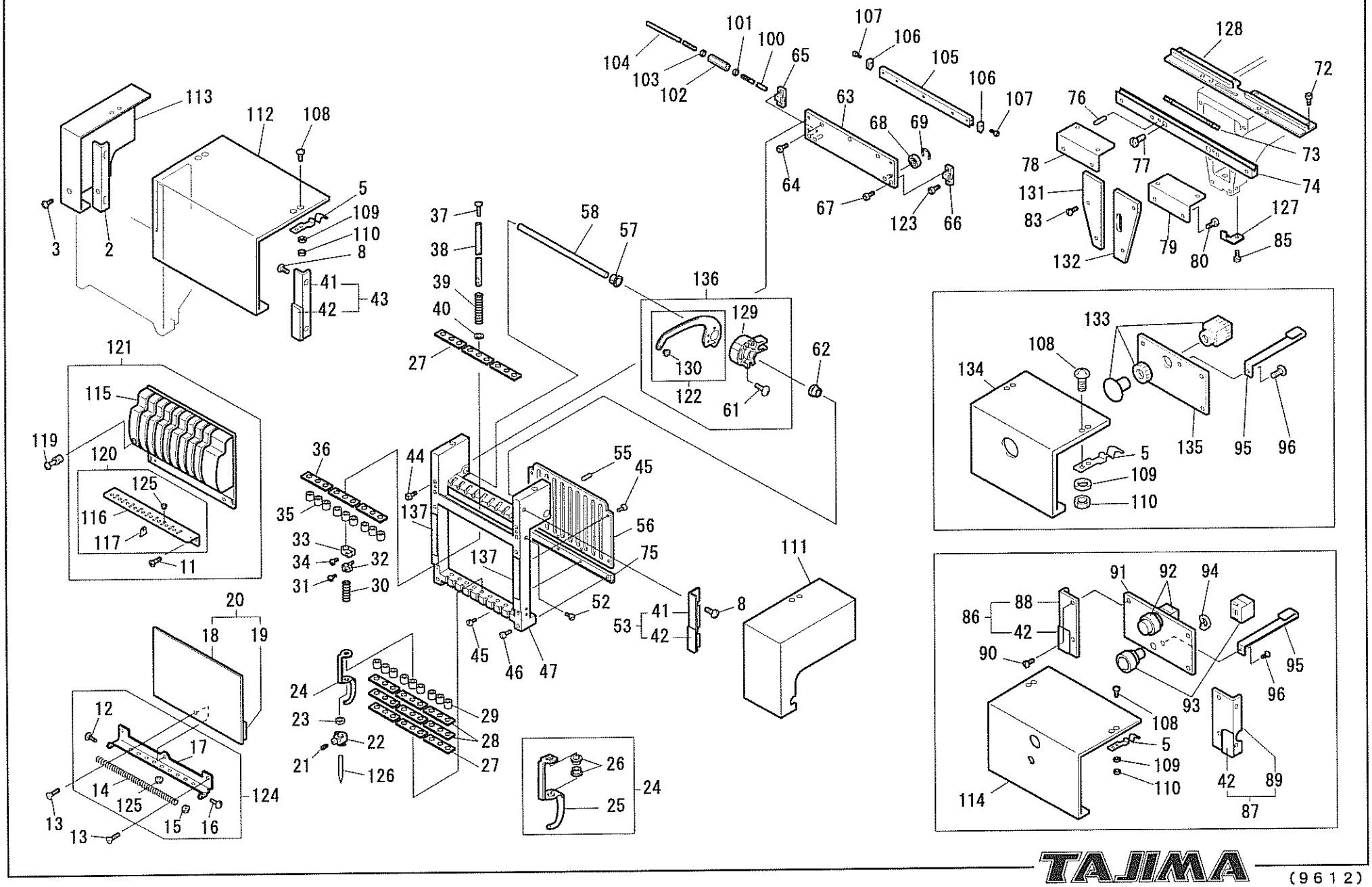
113
112
108
3
2
5
109
110
8
41
42
43
37
38
39
40
27
58
57
136
129
130
122
61
62
104
103
102
101
100
65
107
106
105
106
107
63
68
69
64
67
123
66
128
72
76
73
77
78
74
131
83
127
79
80
85
132
133
108
134
5
135
95
96
109
110
121
115
119
120
125
116
117
11
36
35
33
34
32
31
30
44
137
137
55
45
56
75
52
41
42
53
8
111
45
46
47
20
18
19
12
17
14
125
15
16
13
13
124
24
23
22
21
126
29
28
27
26
25
24
91
92
94
86
88
42
90
95
96
93
108
5
109
110
114
42
89
87

TME-DC NEEDLE BAR CASE

Ref. No.	Description	Part No.	Remark	Ref. No.	Description	Part No.	Remark
75	Case Rail, Lower	FX061200####		111	Front Cover A	MX08150A0000	
76	Spring Pin		3P*15	112	Front Cover B	MX08160A****	
77	Flat Fillister Head Screw	SM601112SC00	11/64*40*12	113	Front Cover C	MX08170A####	
78	Take-up Lever Guide Rail Base L	ME0548LA####		114	Front Cover B	BX080903****	
79	Take-up Lever Guide Rail Base R	ME0548RA####		115	Top Cover	CX06710A####	
80	Flat Fillister Head Screw	SM600908SC00	9/64*40*8	116	Middle Thread Guide	CX06721A####	
83	Flat Fillister Head Screw	SM601107SC00	11/64*40*7	117	Thread Guide	MX05220000000	
85	Hexagon Socket Head Cap Screw	SM621110TN00	11/64*40*10	119	Top Cover Attaching Screw	CX06750000000	
86	Cover Attaching Bracket R Set	BXR80702 0000		120	Middle Thread Guide Set	CX06720A####	
87	Cover Attaching Bracket L Set	BXL80702 0000		121	Top Cover Set	UN260022****	
88	Cover Attaching Bracket R	BXR80712 0000		122	Take-up Lever	FX06030100 00	
89	Cover Attaching Bracket L	BXL80712 0000		123	Hexagon Socket Head Cap Screw	SS620405 0TN0	M4*5
90	Flat Fillister Head Screw	SM600906CC00	9/64*40*6	124	Lower Thread Guide Set	UN260060####	
91	Start Switch Base	BX080803****		125	Thread Guide	FX06261100 00	
92	Start Switch	SC580300000 0		126	Needle	EF064000000 0	DB K5-11
93	Stop Button Switch	SC580600000 0		127	Positioning Plate	EC0A140000 00	
94	Retaining Washer	BX081100000 0		128	Take-up Lever Guide Rail	CD0E0300####	
95	Cord Clamp	BX081000000 0		129	Take-up Lever Boss	CL061100000 0	
96	Truss Head Screw	SS010406 0SD0	M4*6	130	Thread Guide	MX05210000 00	
100	Slide Shaft A	ME0814A0****		131	Arm Front Cover L	CD0E12L00000	
101	Hexagon Nut (Counterclockwise)	SSN006SC1000	M6	132	Arm Front Cover R	CD0E12R00000	
102	M6 Joint	EF082701000 0		133	Push-button Switch	PB0019A0SP00	With Sign Plate
103	Hexagon Nut	SSN006SC0000	M6	134	Front Cover J	EN08690A****	
104	Slide Shaft B	ME0814B0****		135	Emergency Stop Switch Base	EN089000000 0	
105	Case Rail, Upper	FX060601####		136	Take-up Lever Gear Set	CL0611S00000	
106	Roller Stopper	FX063500000 0		137	Magnet Rubber	EF063521030 0	
107	Hexagon Socket Head Cap Screw	SS620406 0TN0	M4*6				
108	Truss Head Screw	SS017504 0SD0	M2.5*4				
109	Plain Washer	WSP038005SC0	M3				
110	Hexagon Nut	SSN075MZ0000	M2.5				

Note: As for parts with marks # or *, please follow our instructions on Table of Contents in your parts order.

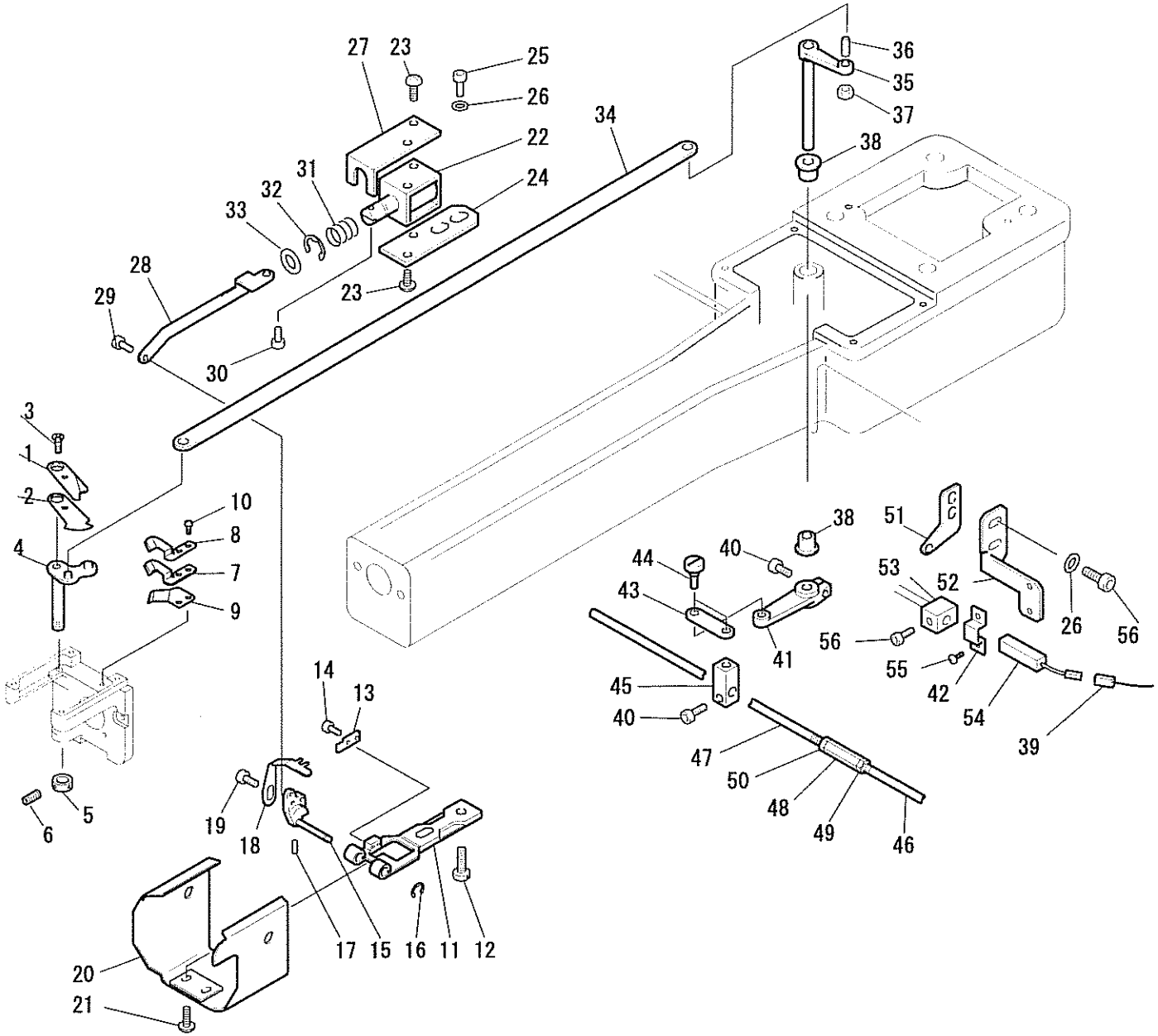
27
23
25
26
22
24
34
36
35
37
38
31
32
33
28
29
23
30
3
1
2
10
8
4
7
9
5
6
14
13
19
18
17
15
16
11
12
20
21
38
51
44
40
43
53
52
41
56
55
42
26
56
45
40
54
39
47
50
48
49
46

TME-DC KNIFE DRIVE SET & PICKER SET

Ref. No.	Description	Part No.	Remark	Ref. No.	Description	Part No.	Remark
1	Movable Knife	AC051100000		31	Compressed Spring	EG0218000000	
2	Thread Separating Plate	AC051200000		32	E-ring	BPE400000000	
3	Countersunk Head Screw	SS110308MZ0	M3*8	33	Needle Bar O-Ring	EF0621000000	
4	Movable Knife Drive Arm	FC0209000000		34	Knife Connecting Plate	EC0C01000000	
5	5mm Dia. Collar	FC0223000000		35	Thread Trimming Lever	FC0217000000	
6	Hexagon Socket Head Set Screw	SS820404 0TN0	M4*4	36	Thread Trimming Lever Pin	FC0211000000	
7	Fixed Knife	AC051300000		37	Hexagon Nut	SSN004SC0000	M4
8	Fixed Knife Guide	AC051400000		38	Oiled Bearing	BPF812121620	
9	Under Thread Presser	AC051500000		39	Knife Retracting Sensor Harness	ED760400****	
10	Pan Head Screw	SS410306 0MZ0	M3*6	40	Hexagon Socket Head Cap Screw	SS620410 0TN0	M4*10
11	Picker Bracket	FC0206000000		41	Drive Arm	FC0213000000	
12	Flat Fillister Head Screw	AC0208000000		42	Proximity Switch Lock	PB000500KN01	
13	Picker Stopper	AC0212010000		43	Knife Connecting Lever	AT0207000000	
14	Pan Head Screw	SS417508 0MZ0	M2.5*8	44	Connecting Lever Pin	AT0206000000	
15	Picker Base	FC0207010000		45	Connecting Stud	AT0208000000	
16	E-ring	BPE200000000		46	Thread Trimming Shaft A	CD0A51A0****	
17	Hexagon Socket Head Set Screw	SS820303 0TN0	M3*3	47	Thread Trimming Shaft B	CD0A51B0****	
18	Picker	FC0208010000		48	M6 Joint	EF0827010000	
19	Hexagon Socket Head Button Screw	SS320305 0SC0	M3*5	49	Hexagon Nut	SSN006SC0000	M6
20	Rotary Hook Base Cover	FC0219040000		50	Hexagon Nut (Counterclockwise)	SSN006SC1000	M6
21	Truss Head Screw	SS010306 0SD0	M3*6	51	Connecting Shaft Holder	CD0C07000000	
22	Solenoid	AT6806C00000		52	Sensor Bracket B	FC0229000000	
23	Pan Head Screw	SS410304 0MZ0	M3*4	53	Searching Block	FX0217000000	
24	Picker Solenoid Base	FC0210000000		54	Proximity Switch	EG6601000000	
25	Hexagon Socket Head Cap Screw	SS620406 0TN0	M4*6	55	Pan Head Screw	SS410305 0SD0	M3*5
26	Plain Washer	WSP04A008SC0	M4	56	Hexagon Socket Head Cap Screw	SS620408 0TN0	M4*8
27	Solenoid Cover	FC0226000000					
28	Connecting Plate	FC0212000000					
29	Connecting Pin	AC0205000000					
30	Solenoid Pin	EG0223000000					

Note: As for parts with marks # or *, please follow our instructions on Table of Contents in your parts order.

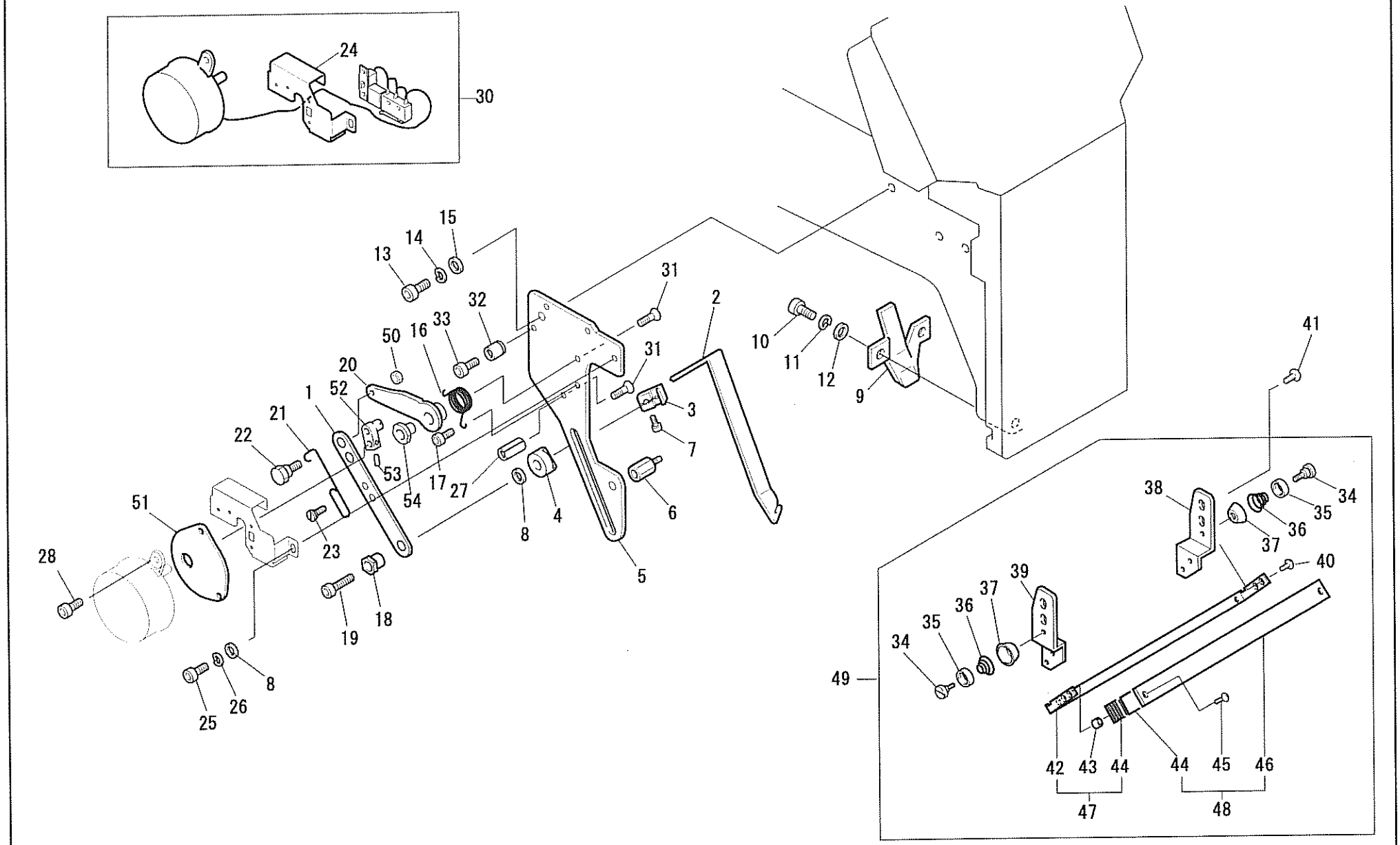
24
30
15
14
13
31
32
2
33
16
50
10
11
12
9
41
31
20
52
1
21
22
3
7
53
54
17
27
51
8
4
6
38
34
35
36
37
28
23
5
40
39
37
36
35
34
19
18
49
8
26
25
42
43
44
44
45
46
47
48

TME-DC UPPER THREAD HOLDER SET

Ref. No.	Description	Part No.	Remark	Ref. No.	Description	Part No.	Remark
1	Connecting Rod Plate	CD0E070000000		32	Cushion	AT0404000000	
2	Upper Thread Hook	EC0A020000000		33	Cushion Pin	AT0405000000	
3	Upper Thread Hook Bracket	AC0306100000		34	Thread Suspender Attaching Screw	AT2311000000	
4	Positioning Collar	AC0302010000		35	Thread Suspender Spring Presser	EF0638000000	
5	Thread Hook Base	CD0E090000000		36	Thread Suspender Spring	EF0639000000	
6	Base Stud	EC0504000000		37	Thread Suspender Disk	EF0637000000	
7	Hexagon Socket Head Cap Screw	SS620312 0TN0	M3*12	38	Upper Thread Holder Bracket R	FX0629R00000	
8	Plain Washer	WSP038005SC0	M3	39	Upper Thread Holder Bracket L	FX0629L00000	
9	Hook Guide	EC0A350000000		40	Pan Head Screw	SS410304 0MZ0	M3*4
10	Hexagon Socket Head Cap Screw	SS620410 0TN0	M4*10	41	Truss Head Screw	SMF802054 0CL	9/64*40*4
11	Spring Washer	WSS040000KC0	M4	42	Thread Presser Base	AC0309 01####	
12	Plain Washer	WSP04A008SC0	M4	43	Thread Presser Spacer	AT0304000000	
13	Hexagon Socket Head Cap Screw	SS620512 0TN0	M5*12	44	Velcro	AC0311 00####	
14	Spring Washer	WSS050000KC0	M5	45	Pan Head Screw	SS410308 0SA0	M3*8
15	Plain Washer	WSP05C008SC0	M5	46	Thread Presser Lid	AC0310 00####	
16	Lever Return Spring	AT0311000000		47	Thread Presser Base(with attaching tape)	UN680170****	
17	Hexagon Socket Head Cap Screw	SS620304 0TN0	M3*4	48	Thread Presser Lid (with attaching tape)	UN680180****	
18	Guide Bushing	AC0304000000		49	Thread Presser Base Set	UN680031****	
19	Hexagon Socket Head Cap Screw	SS620320 0TN0	M3*20	50	Special Nut	AT0307100000	
20	Drive Arm	AT0310000000		51	Motor Base	AT0321000000	
21	Anti-Come-out Spring	EC0A510000000		52	Motor Lever	CD0E080000000	
22	Lever Connecting Pin	EC0A500000000		53	Hexagon Socket Head Set Screw	SS820404 0TN0	M4*4
23	Flat Fillister Head Screw	SM140205 40CN	9/64*40*4	54	Shaft Holder Bushing	AT0315000000	
24	Switch Base	CD0E100000000					
25	Hexagon Socket Head Cap Screw	SS620306 0TN0	M3*6				
26	Spring Washer	WSS030000KC0	M3				
27	Motor Stud	AT0313010000					
28	Hexagon Socket Head Cap Screw	SS620305 0TN0	M3*5				
30	Motor-driven Upper Thread Hook Assy. B	AT9101A10000					
31	Countersunk Head Screw	SS110308 0MZ0	M3*8				

Note: As for parts with marks # or *, please follow our instructions on Table of Contents in your parts order.

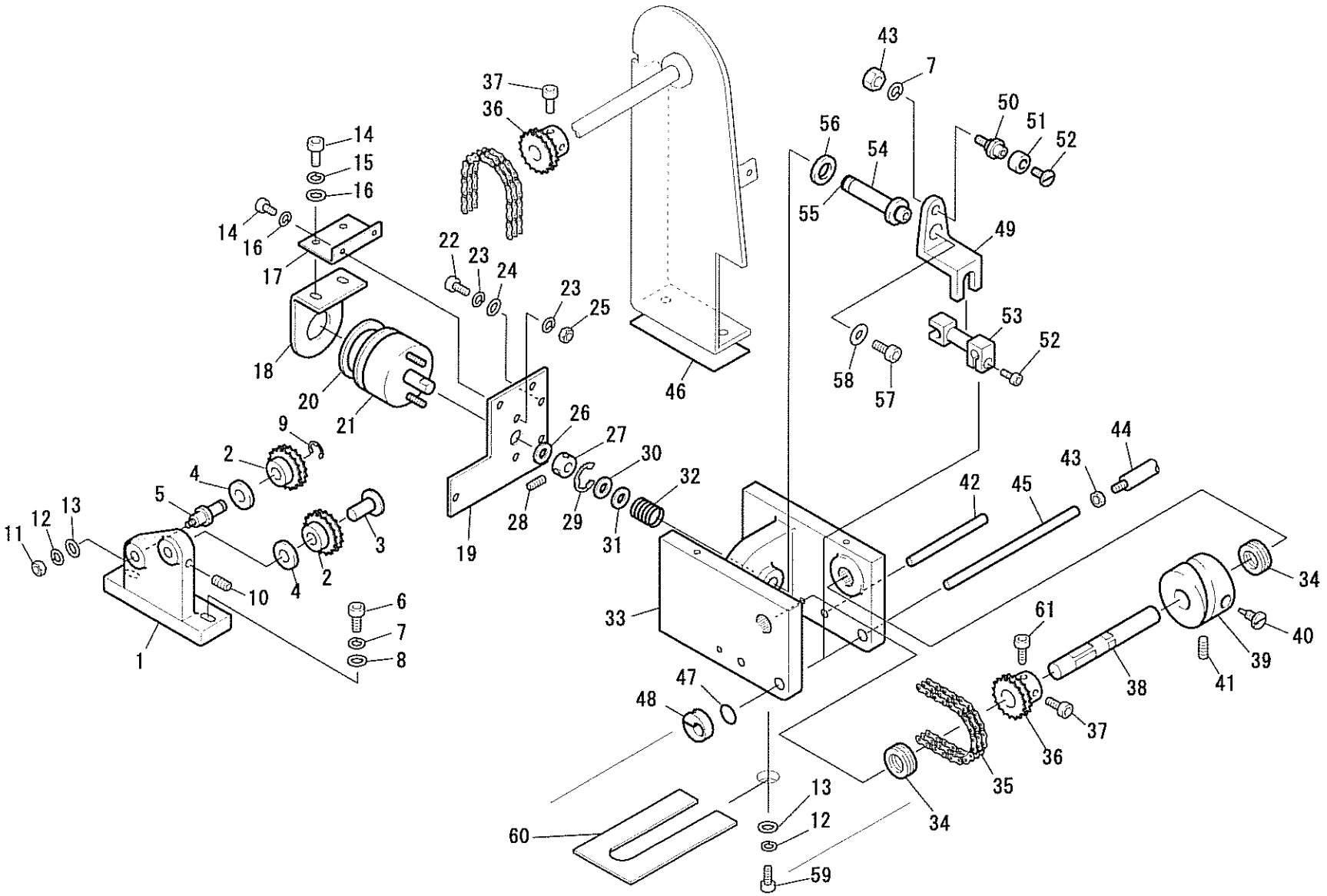
37
36
14
15
16
14
16
17
18
20
21
22
23
24
23
25
26
27
30
32
28
29
31
19
9
2
4
5
11
12
13
1
10
4
2
3
6
7
8
33
46
43
7
56
54
55
50
51
52
49
53
52
58
57
44
43
42
45
34
40
39
41
38
61
37
36
35
34
47
48
60
13
12
59

TME-DC CAM DRIVE SYSTEM SET

Ref. No.	Description	Part No.	Remark	Ref. No.	Description	Part No.	Remark
1	ATH Tension Base	CD0C010000000		31	Washer B	AT0122000000	
2	Tension Sprocket	AT0117000000		32	Cam Roller Return Spring	AT0108010000	
3	Tension Pin	AT0118000000		33	Cam Attaching Base	CD0C060000000	
4	Thrust Washer	BPAS110000000		34	Thrust Bearing Set		
5	ATH Eccectric Pin	CD0C020000000		35	Chain	CD0C030000000	
6	Hexagon Socket Head Cap Screw	SS6206300TN0	M6*30	36	15mm Dia. Sprocket	AT0104000000	
7	Spring Washer	WSS060000KC0	M6	37	Hexagon Socket Head Cap Screw	SS6206100TN0	M6*10
8	Plain Washer	WSP06D010SC0	M6	38	Cam Shaft	FX0212000000	
9	E-ring	BPE800000000		39	Cam	FX0211000000	
10	Hexagon Socket Head Set Screw	SS8206060TN0	M6*6	40	Cam Attaching Screw	AT0123000000	
11	Hexagon Nut	SSN008SC0000	M8	41	Slotted Set Screw	SMK0000CC0CN	9/32*28*12
12	Spring Washer	WSS080000KC0	M8	42	Sub Shaft	CD0C050000000	
13	Plain Washer	WSP08J016SC0	M8	43	Hexagon Nut	SSN206SC0000	M6 Type 3
14	Hexagon Socket Head Cap Screw	SS6204080TN0	M4*8	44	Thread Trimming Shaft D	CD0A51D0****	
15	Spring Washer	WSS040000KC0	M4	45	Thread Trimming Connecting Shaft	CD0C040000000	
16	Plain Washer	WSP04A008SC0	M4	46	Shaft Holder Base Spacer	CD0A5401****	
17	Plunger Bracket	AT0120000000		47	O-Ring	BPP100000000	
18	Plunger Holder	AT0121000000		48	Cushion Connecting Stud	AC0405000000	
19	Solenoid Base	CD0C090000000		49	Cam Lever	AC0402000000	
20	Solenoid Cushion	AT0119000000		50	Cam Pin	AT0110000000	
21	Thread Trimming Solenoid	AT6802B00000		51	Cam Roller	AT0111000000	
22	Hexagon Socket Head Cap Screw	SS6205150TN0	M5*15	52	Lid Screw	AT0112010000	
23	Spring Washer	WSS050000KC0	M5	53	Lever Drive Pin	AC0403000000	
24	Plain Washer	WSP05C008SC0	M5	54	Lever Support Pin	AT0106010000	
25	Hexagon Nut	SSN205SC0000	M5 Type 3	55	Support Pin Cushion	AT0106100000	
26	Cushion Washer B	AT0116000000		56	Cushion Washer A	AT0107000000	
27	7.94mm Dia. Collar	EF0209000000		57	Hexagon Socket Head Cap Screw	SS6204080TN0	M4*8
28	Slotted Set Screw	SMM00006 04TN	11/64*40*4	58	Lever Fixing Washer	AT0109000000	
29	E-ring	BPE120000000		59	Hexagon Socket Head Cap Screw	SS6208300TN0	M8*30
30	Cushion Washer A	AT0107000000		60	Driver Cam Base Spacer	MX08320 0****	

Note: As for parts with marks # or *, please follow our instructions on Table of Contents in your parts order.

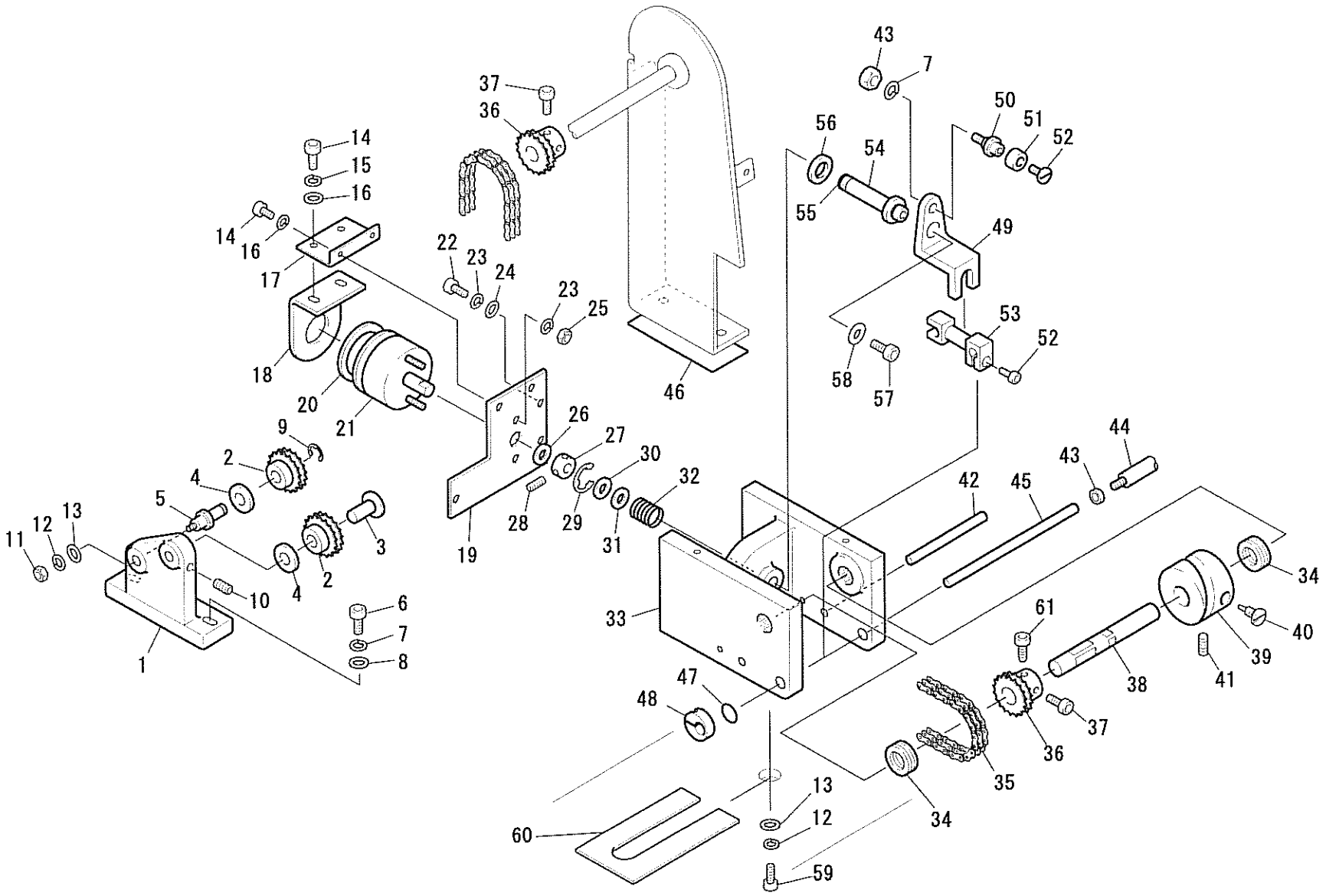
43
7
37
36
50
51
52
56
54
55
14
15
16
14
16
17
49
22
23
24
23
25
53
52
18
58
57
20
21
46
26
27
9
2
30
44
43
4
32
42
45
5
13
12
11
28
29
31
3
19
2
4
10
34
6
33
61
40
7
39
8
1
38
41
47
48
37
36
35
13
34
12
60
59

TME-DC CAM DRIVE SYSTEM SET

Ref. No.	Description	Part No.	Remark	Ref. No.	Description	Part No.	Remark
61	Sprocket Fixing Screw	A T 0 1 2 4 0 0 0 0 0 0					

Note: As for parts with marks # or ※, please follow our instructions on Table of Contents in your parts order.

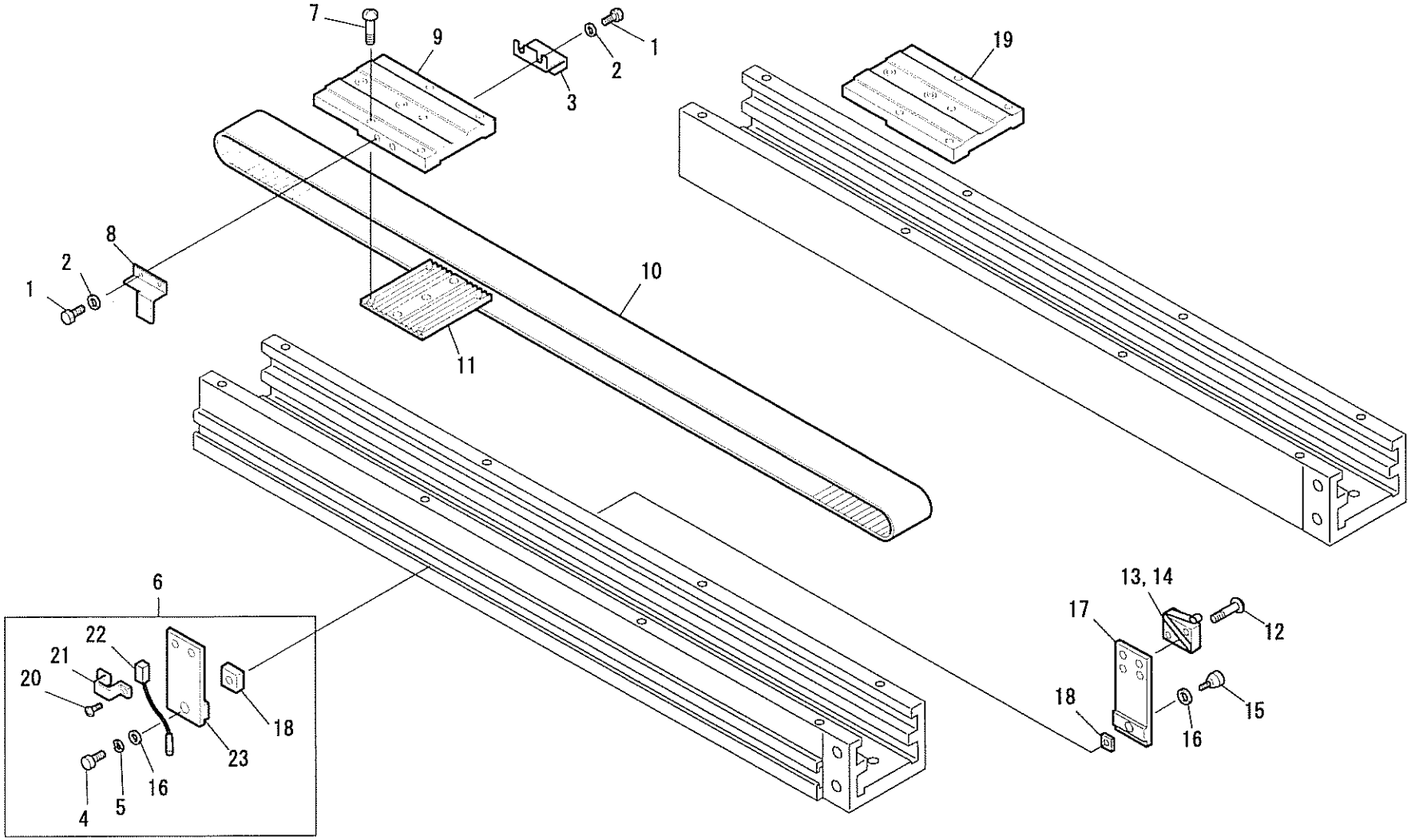
7
9
1
2
3
19
8
2
1
10
11
6
22
21
20
18
23
16
4
5
13, 14
17
12
18
15
16

TME-DC X-AXIS DRIVE SYSTEM 1

Ref. No.	Description	Part No.	Remark	Ref. No.	Description	Part No.	Remark
1	Hexagon Bolt	EG0780000000	M3*6				
2	Plain Washer	WSP038005SC0	M3				
3	LS Dog Base	MX0730010000					
4	Hexagon Socket Head Cap Screw	SS6204100TN0	M4*10				
5	Spring Washer	WSS04000KC0	M4				
6	Proximity Switch B Set	UN110161B000					
7	Pan Head Screw	SS4104150SD0	M4*15				
8	0-point Search Plate	MX0731000000					
9	X-axis Feed Plate B	CD0B08B00000					
10	X-axis Drive Belt	BPS5M351****					
11	Belt Catcher Plate	MX0732000000					
12	Pan Head Screw	SS4103140SA0	M3*14				
13	Actuator	MS6602000000					
14	Limit Switch	PB001000SP00					
15	Adjusting Knob	EG0731000000					
16	Plain Washer	WSP04A008SC0	M4				
17	Limit Switch Base B	EG0727B10000					
18	Fixing Base	EG0730000000					
19	X-axis Feed Plate A	CD0B08A00000					
20	Pan Head Screw	SS4103050SD0	M3*5				
21	Proximity Switch Lock	PB001000KN01					
22	Proximity Switch	PB001000KN00					
23	Sensor Attaching Base B	EG0732B10000					

Note: As for parts with marks # or *, please follow our instructions on Table of Contents in your parts order.

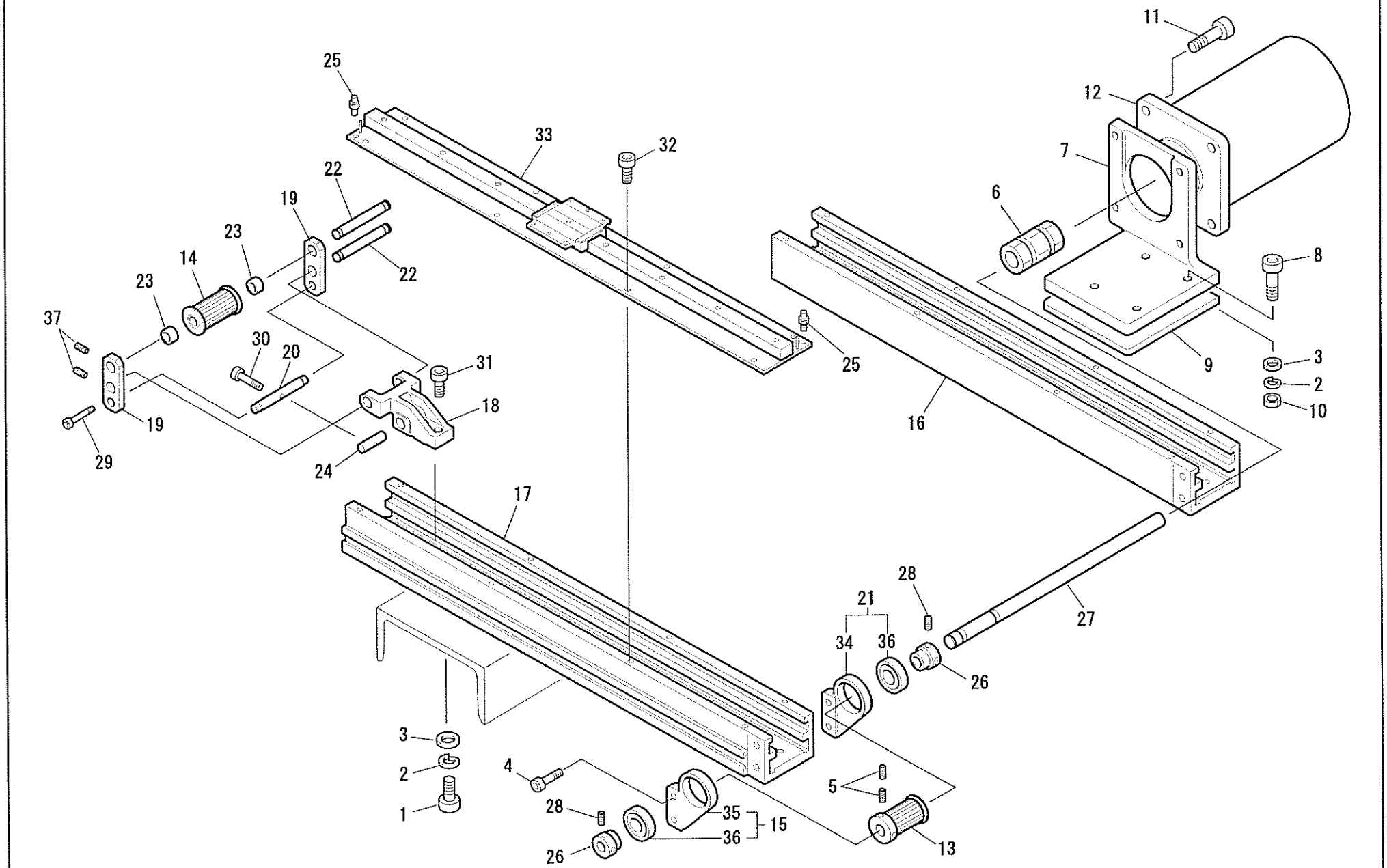
11
12
7
6
8
9
3
2
10
25
33
32
22
19
23
14
22
23
37
30
20
31
18
19
29
24
25
16
17
28
21
34
36
27
26
3
2
1
4
28
26
35
36
15
5
13

TME-DC X-AXIS DRIVE SYSTEM 2

Ref. No.	Description	Part No.	Remark	Ref. No.	Description	Part No.	Remark
1	Hexagon Socket Head Cap Screw	SS620825 0TN0	M8*25	30	Hexagon Socket Head Cap Screw	SS6206450TN0	M6*45
2	Spring Washer	WSS080000KC0	M8	31	Hexagon Socket Head Cap Screw	SS6206250TN0	M6*25
3	Plain Washer	WSP08J016SC0	M8	32	Hexagon Socket Head Cap Screw	SS6204120TN0	M4*12
4	Hexagon Socket Head Cap Screw	SS6206150TN0	M6*15	33	X-axis Drive Linear Base Set	MX07480 0****	
5	Hexagon Socket Head Set Screw	SS8206050TN0	M6*5	34	Shaft Holder Plate R	MX0733R00000	
6	N-Coupling	BPN150150000		35	Shaft Holder Plate L	MX0733L00000	
7	Pulse Motor Bracket	CT0872000000		36	Ball Bearing	BP6003ZZ0000	
8	Hexagon Socket Head Cap Screw	SS6208400TN1	M8*40	37	Hexagon Socket Head Set Screw	SS8205050TN0	M5*5
9	Motor Base Liner	CT0873 00****					
10	Hexagon Nut	SSN008SC0000	M8				
11	Hexagon Socket Head Cap Screw	SS6208150TN0	M8*15				
12	Pulse (Stepping) Motor	EH6403000000					
12	Pulse (Stepping) Motor	LG6404000000	18H,X=360mm				
13	Driver-side Timing Pulley A	MX0710A00000	35W				
14	Tension-side Timing Pulley A Set	UN110030A000					
15	Shaft Holder Plate L (W/Bearing)	CDS702L00000					
16	X-axis Driver Frame A	DC0711A0****					
17	X-axis Driver Frame B	DC0711B0****					
18	Tension Base Holder	MX0734000000					
19	Vertical Tension Base	MX0723000000					
20	Tension Shaft	MX0724000000					
21	Shaft Holder Plate R (W/Bearing)	CDS702R00000					
22	Tension Pulley Shaft	MX0725000000					
23	Tension Spacer	MX0726000000					
24	Driver Tension Shaft	MX0728000000					
25	Stopper	MX0729000000					
26	15mm Dia. Bearing Collar	EG0227000000					
27	X-axis Drive Shaft	CD0B07000000					
28	Hexagon Socket Head Set Screw	SS8205050TN0	M5*5				
29	Hexagon Socket Head Cap Screw	SS6205350TN0	M5*35				

Note: As for parts with marks # or *, please follow our instructions on Table of Contents in your parts order.

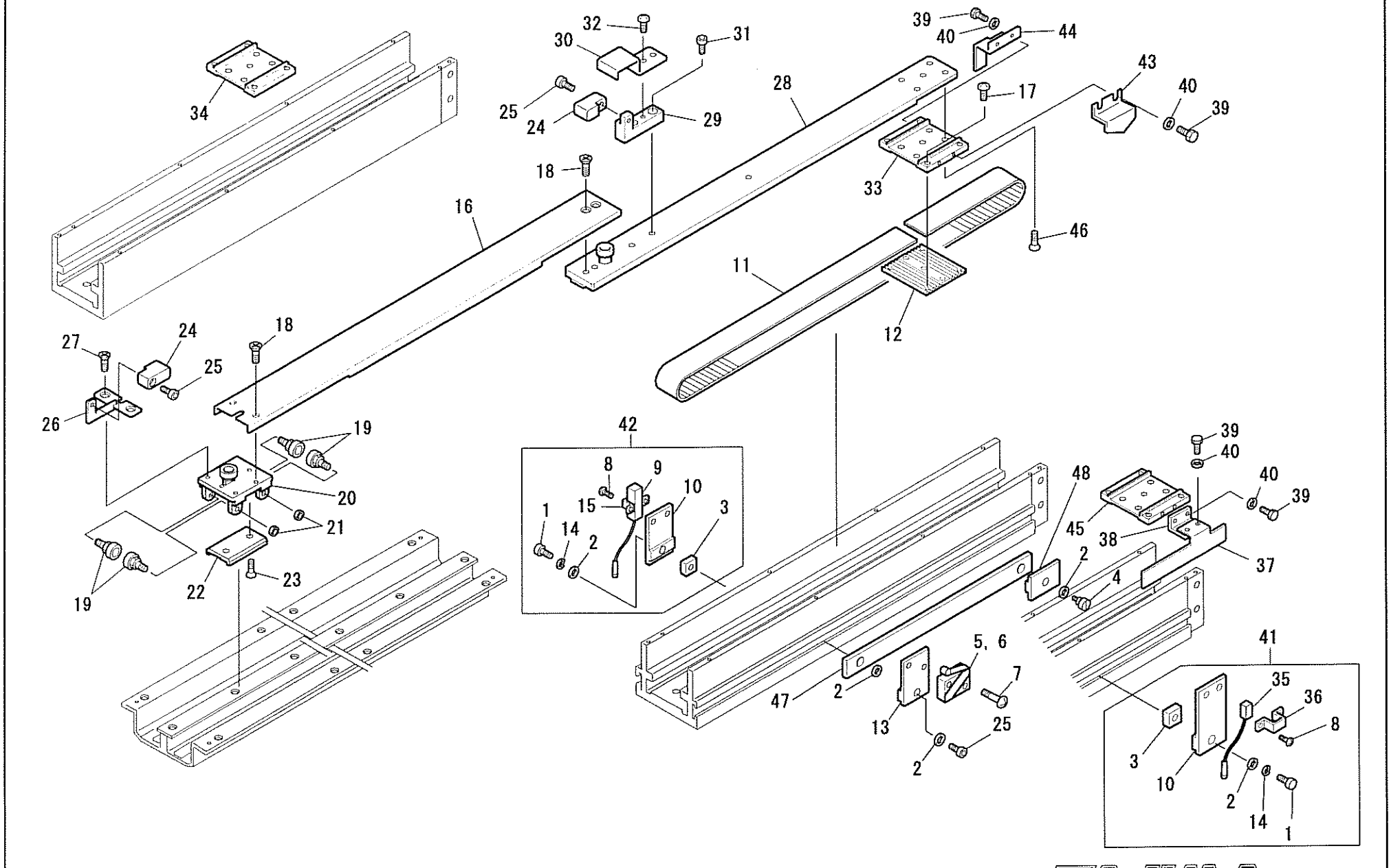
34
32
30
31
25
24
29
28
39
40
44
43
40
39
17
33
18
16
46
11
12
27
24
25
18
26
19
20
21
19
22
23
42
8
9
10
15
1
14
2
3
48
45
39
40
40
39
38
37
2
4
5, 6
7
47
2
13
25
2
41
35
36
8
3
10
2
14
1

TME-DC Y-AXIS DRIVE SYSTEM 1

Ref. No.	Description	Part No.	Remark	Ref. No.	Description	Part No.	Remark
1	Hexagon Socket Head Cap Screw	SS620410 0TN0	M4*10	31	Hexagon Socket Head Cap Screw	SS6205080TN0	M5*8
2	Plain Washer	WSP04A008SC0	M4	32	Truss Head Screw	SS0104080SD0	M4*8
3	Fixing Base	EG0730000000		33	Y-axis Feed Plate B	DC0714B00000	
4	Adjusting Knob	EG0731000000		34	Y-axis Feed Plate C	DC0714C00000	
5	Limit Switch	PB001000SP00		35	Proximity Switch	EG6601000000	
6	Actuator	MS6602000000		36	Proximity Switch Lock	PB000500KN01	
7	Pan Head Screw	SS4103140SA0	M3*14	37	Y-axis Positioning Plate	DC0719000000	
8	Pan Head Screw	SS4103050SD0	M3*5	38	Y-axis Positioning Plate Attach Bracket	CD0709000000	
9	Proximity Switch	PB001000KN00		39	Hexagon Bolt	EG0780000000	
10	Sensor Attaching Base B	EG0732B10000		40	Plain Washer	WSP038005SD0	M3
11	X-axis Drive Belt	BPS5M351130 0		41	Proximity Switch B Set	UN110160B000	
12	Belt Catcher Plate	MX0732000000		42	Proximity Switch B Set	UN110161B000	
13	Limit Switch Base B	EG0727B10000		43	LS Dog Base	MX0730010000	
14	Spring Washer	WSS040000KC0	M4	44	0-point Search Plate	MX0731000000	
15	Proximity Switch Lock	PB001000KN01		45	Y-axis Feed Plate D	DC0714D00000	
16	Y-axis Feed Connecting Plate	CD0B240000000		46	Countersunk Head Screw	SS1105080SD0	M5*8
17	Pan Head Screw	SS4104150SD0	M4*15	47	Fixing Base A	CD0B250000000	
18	Countersunk Head Screw	SS1104080SD0	M4*8	48	Fixing Base B	CD0B260000000	
19	Y-axis Feed Front Pin	MX0742000000					
20	Y-axis Feed Plate, Front	MX0738000000					
21	Hexagon Nut	SSN005SC0000	M5 Type 1				
22	Guide Plate	MX0743000000					
23	Countersunk Head Screw	SS1104050SD0	M4*5				
24	Frame Presser Block	MX0737000000					
25	Hexagon Socket Head Cap Screw	SS620410 0TP0	M4*10				
26	Roller Attaching Bracket	MX7410000000					
27	Countersunk Head Screw	SS1104060SD0	M4*6				
28	Driver Connecting Plate	CD0B130000000					
29	Float-preventive Bracket	CD0C160000000					
30	Float-preventive Cover	CD0B150000000					

Note: As for parts with marks # or *, please follow our instructions on Table of Contents in your parts order.

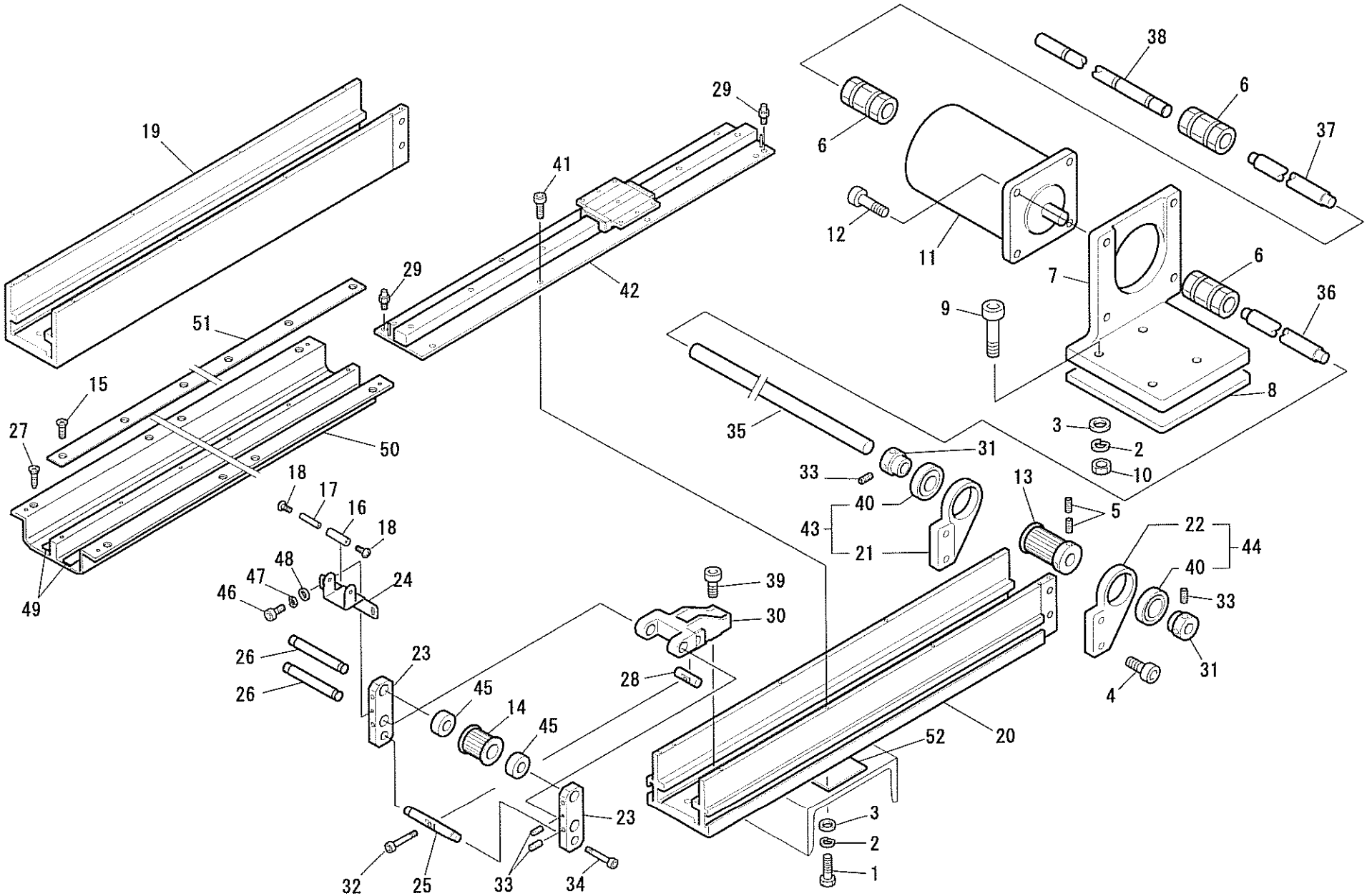
19
29
41
42
29
51
15
27
50
49
18
17
16
18
48
47
46
24
26
26
23
45
14
45
23
32
25
33
34
39
30
28
35
31
33
40
43
21
13
5
22
44
40
33
31
4
20
52
3
2
1
38
6
6
37
12
11
7
6
36
9
8
3
2
10

TME-DC Y-AXIS DRIVE SYSTEM 2

Ref. No.	Description	Part No.	Remark	Ref. No.	Description	Part No.	Remark
1	Hexagon Socket Head Cap Screw	SS6208250TN0	M8*25	30	Tension Base Holder	MX0734000000	
2	Spring Washer	WSS080000KC0	M8	31	15mm Dia. Bearing Collar	EG0227000000	
3	Plain Washer	WSP08J016SC0	M8	32	Hexagon Socket Head Cap Screw	SS6206450TN0	M6*45
4	Hexagon Socket Head Cap Screw	SS6205150TN0	M5*15	33	Hexagon Socket Head Set Screw	SS8205050TN0	M5*5
5	Hexagon Socket Head Set Screw	SS8206060TN0	M6*6	34	Hexagon Socket Head Cap Screw	SS6205350TN0	M5*35
6	N-Coupling	BPN150150000		35	Y15 Shaft A	CD0805A0****	
7	Pulse Motor Bracket	CT0872000000		36	Y20 Shaft A	CD0806A0****	Y:5-Belt Drive
8	Motor Base Liner	CT0873000****		37	Y20 Shaft B	CD0806B0****	Y:5-Belt Drive
9	Hexagon Socket Head Cap Screw	SS6208400TN1	M8*40	38	Y15 Shaft B	CD0805B0****	
10	Hexagon Nut	SSN008SC0000	M8	39	Hexagon Socket Head Cap Screw	SS6206250TN0	M6*25
11	Pulse (Stepping) Motor	EH6404000000		40	Ball Bearing	BP6003ZZ0000	
11	Pulse (Stepping) Motor	LG6405000000	18H,X=360mm	41	Hexagon Socket Head Cap Screw	SS6204120TN0	M4*12
12	Hexagon Socket Head Cap Screw	SS6208150TN0	M8*15	42	Y-axis Drive Linear Base Set	MX0749000****	
13	Driver Timing Pulley A	MX0710A00000		43	Shaft Holder Plate R (W/Bearing)	MXS733R00000	
14	Tension-side Timing Pulley A Set	UN110030A000		44	Shaft Holder Plate L (W/Bearing)	MXS733L00000	
15	Countersunk Head Screw	SS1104100SD0	M4*10	45	Tension Spacer	MX0726000000	
16	Roller	EF0722000000		46	Hexagon Socket Head Cap Screw	SS6204080TN0	M4*8
17	Roller Pin	EF0723010000		47	Spring Washer	WSS040000KC0	M4
18	Truss Head Screw	SS0103080SD0	M3*8	48	Plain Washer	WSP04A008SC0	M4
19	Y-axis Driver Frame A	CD0B10A00000		49	Rail Plate	CD0B230000000	
20	Y-axis Driver Frame B	CD0B10B00000		50	Front Rail Holder	CD0B200000000	
21	Shaft Holder Plate R	MX0733R00000		51	Y-axis Feed Rail Plate	CD0B220000000	
22	Shaft Holder Plate L	MX0733L00000		52	Driver Spacer	EF0831000****	
23	Tension Base	CD0B140000000					
24	Bearing Case	CD0B110000000					
25	Tension Shaft	MX0724000000					
26	Tension Pulley Shaft	MX0725000000					
27	Countersunk Head Wood Screw		4.1P*20				
28	Driver Tension Shaft	MX0728000000					
29	Stopper	MX0729000000					

Note: As for parts with marks # or *, please follow our instructions on Table of Contents in your parts order.

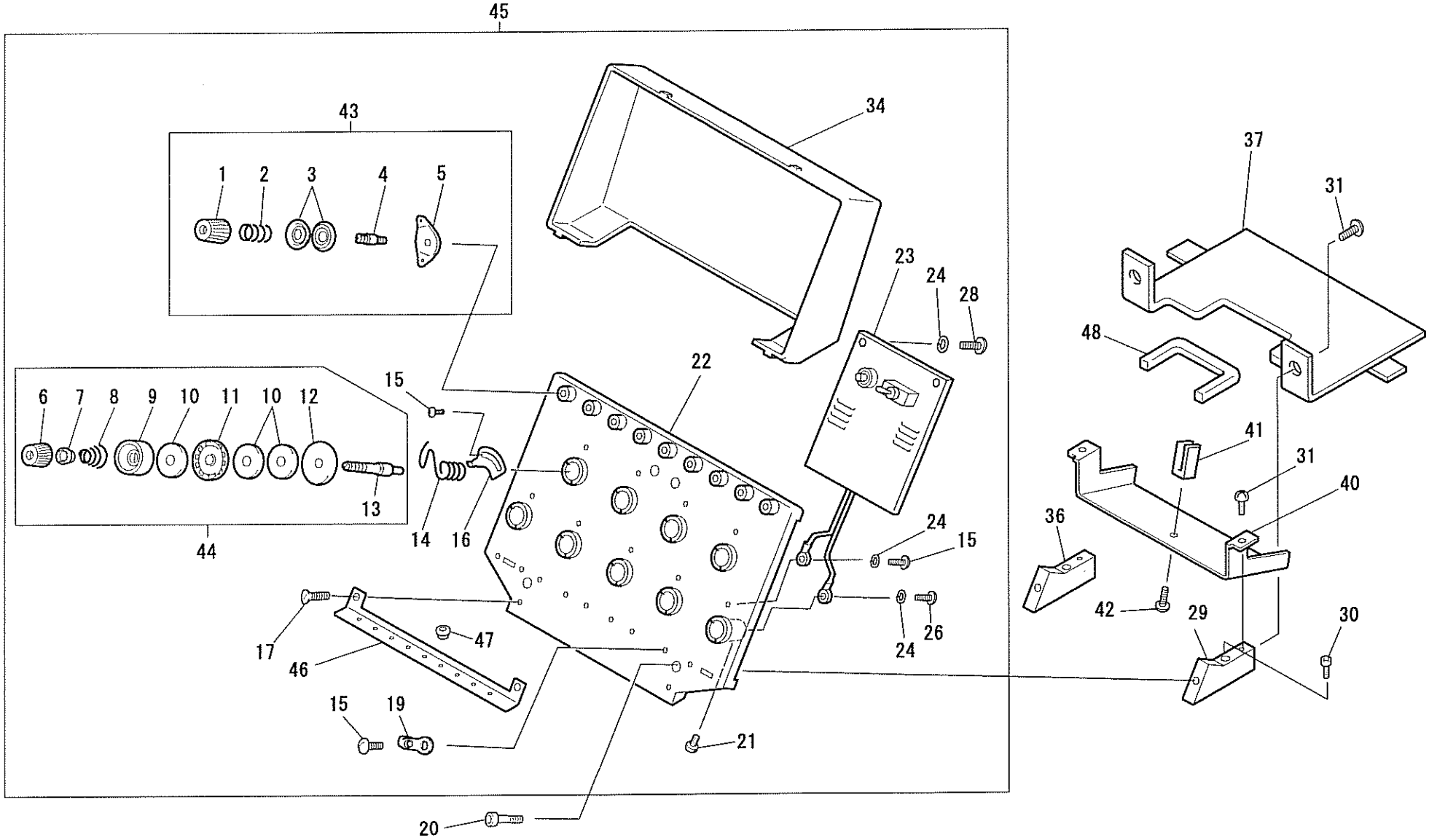
45
43
1
2
3
4
5
34
37
31
23
24
28
48
22
15
6
7
8
9
10
11
10
12
13
14
16
44
41
31
40
36
24
15
42
29
30
17
47
46
24
26
15
19
21
20

TME-DC INDIVIDUAL TENSION BASE

Ref. No.	Description	Part No.	Remark	Ref. No.	Description	Part No.	Remark
1	First Tension Thread Spring Screw	LG09220A0000		37	Tension Base Cord Cover A	MX0901AA####	Right-side
2	First Tension Spring B	LG0960000000		37	Tension Base Cord Cover B	MX0901BA####	Middle
3	First Tension Disk	LG0920000000		37	Tension Base Cord Cover C	MX0901CA####	Left-side
4	First Tension Stud	LG0918010000		40	Cord Support Cover	FX09100A####	
5	First Tension Thread Course	LG0919010000		41	Harness Clamp	MX0902000000	
6	Adjusting Screw	EF09090A0000		42	Truss Head Screw	SS0103040SD0	M3*4
7	Spring Hook	EF0910000000		43	First Tension Set	UN150500A001	
8	Tension Spring	EF0908000000		44	Tension Base Tension Set	UN2305000001	
9	Tension Collar	EF0906000000		45	Individual Tension Base Set	UN230023****	
10	Felt Packing	EF0904000000		46	Tension Base Lower Thread Guide	CX090100####	
11	Rotary Tension Disk	EF0905010000		47	Thread Guide	MX0521000000	
12	Insulation Plate	EF0903000000		48	Rubber Bushing	PB003400EB00	
13	Tension Stud	LG0923000000					
14	Thread Take-up Spring	EF0907010000					
15	Truss Head Screw	SMF601647 0CL	1/8*44*7				
16	Thread Breakage Detecting Contact Point	LG0916000000					
17	Round Countersunk Head Screw	SMC500046 0CL	1/8*44*4				
19	Tension Base Middle Thread Guide	LG0917020000					
20	Hexagon Socket Head Cap Screw	SS6204100TN0	M4*10				
21	Round Fillister Head Screw	SM660155 60CL	9/64*40*6				
22	Individual Tension Base	FX09010A####					
23	Tension Base Card (PC Board)	EG7203030000					
24	Spring Washer	WSS030000KC0	M3				
26	Pan Head Screw	SS4103060SD0	M3*6				
28	Pan Head Screw	SS4103050SD0	M3*5				
29	Individual Tension Base Support R	LG0912RA0000					
30	Hexagon Socket Head Cap Screw	SS6204180TN0	M4*18				
31	Truss Head Screw	SMF802056 0CL	9/64*40*6				
34	Tension Base Cover	FX09030A####					
36	Individual Tension Base Support L	LG0912LA0000					

Note: As for parts with marks # or *, please follow our instructions on Table of Contents in your parts order.

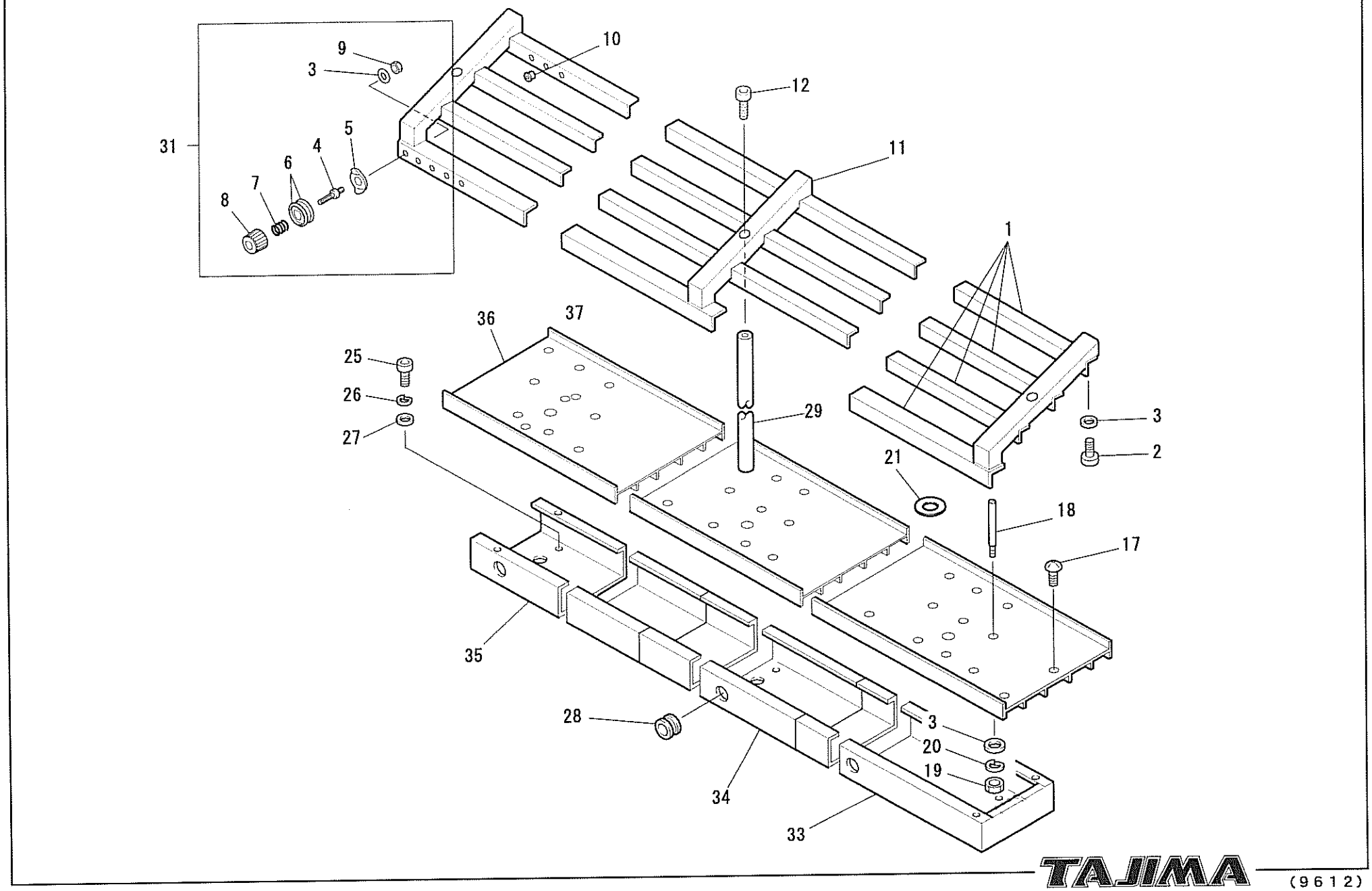
9
3
10
12
31
5
4
6
7
8
11
1
36
37
25
26
27
29
3
2
21
18
17
35
28
3
20
19
34
33

TME-DC THREAD STAND

Ref. No.	Description	Part No.	Remark	Ref. No.	Description	Part No.	Remark
1	Thread Course	EH090201＊＊＊＊					
2	Hexagon Socket Head Cap Screw	SS6205100TN0	M5＊10				
3	Plain Washer	WSP05C008SC0	M5				
4	No.1 Tension Stud	LG0918010000					
5	No.1 Tension Thread Course	LG0919010000					
6	No.1 Tension Disk	LG0920000000					
7	No.1 Tension Spring	LG0921010000					
8	No.1 Thread Tension Spring Screw	LG09220A0000					
9	Hexagon Nut	SMN06603 0CN0	11/64＊40				
10	Thread Guide A	EF0942A00000	White				
10	Thread Guide B	EF0942B00000	Red				
11	Thread Course Stay	MX083000＊＊＊＊					
12	Hexagon Socket Head Cap Screw	SS6205200TD0	M5＊20				
17	Truss Head Screw	SS0104100SD0	M4＊10				
18	Thread Stand Stud	EF0939010000					
19	Hexagon Nut	SSN005SC0000	M5				
20	Spring Washer	WSS050000KC0	M5				
21	Thread Stand Felt	EF0940000000					
25	Hexagon Socket Head Cap Screw	SS6204120TN0	M4＊12				
26	Spring Washer	WSS040000KC0	M4				
27	Plain Washer	WSP04A008SC0	M4				
28	One-touch Bushing	BPTB25330000					
29	Thread Stand Shaft A	EF0937A20000					
31	No.1 Tension Set	UN150500B001					
33	No.1 Wiring Duct	CD0A04A0＊＊＊＊					
34	No.2 Wiring Duct	CD0A04B0＊＊＊＊					
35	No.3 Wiring Duct	CD0A04C0＊＊＊＊					
36	Thread Stand Plate	CD0A0500＊＊＊＊					

Note: As for parts with marks # or ＊, please follow our instructions on Table of Contents in your parts order.

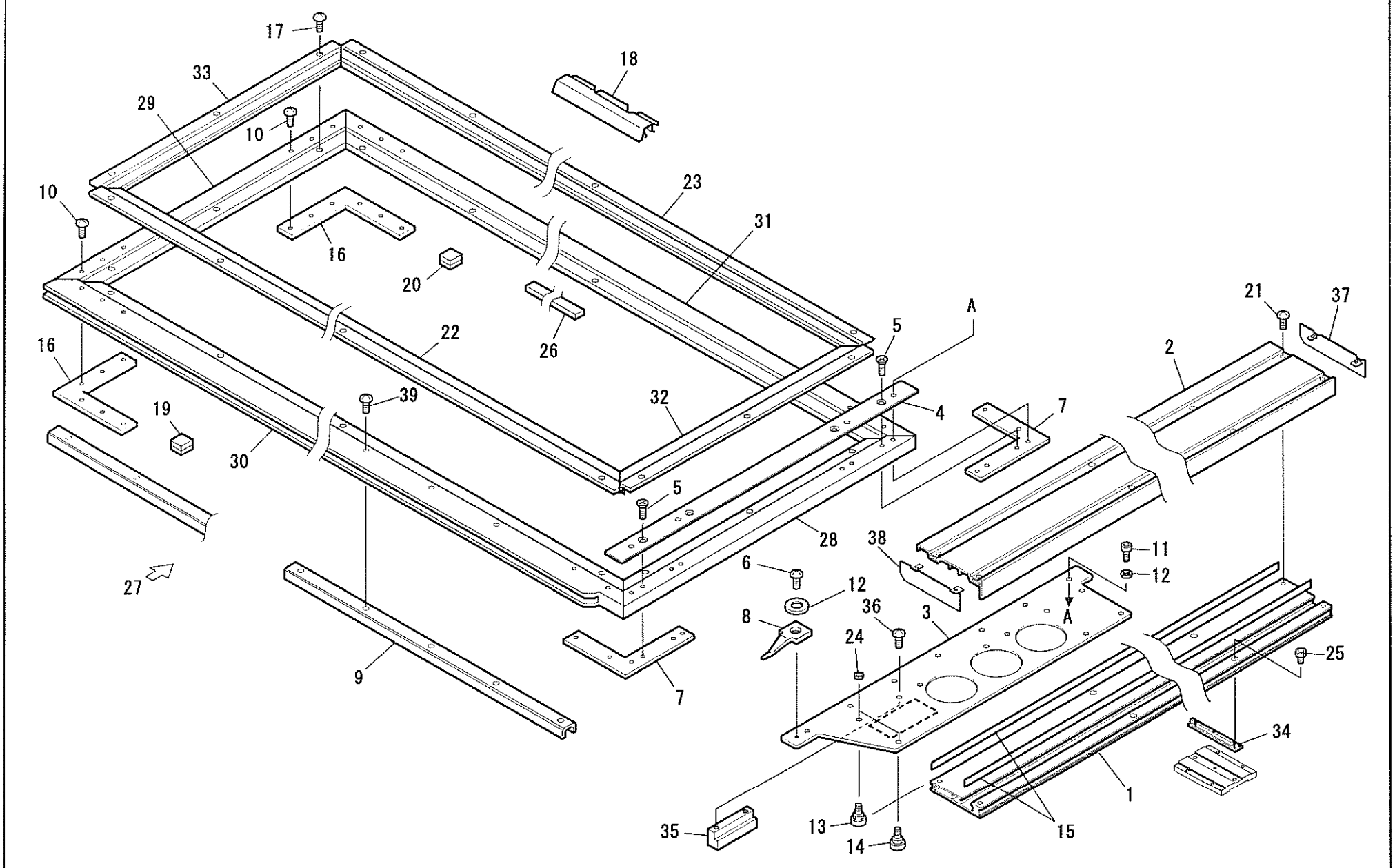
17
33
29
10
18
23
31
10
16
20
22
26
16
19
39
30
32
A
5
4
7
21
37
2
5
28
38
11
12
6
12
36
3
A
8
24
25
9
7
34
1
35
13
14
15

TME-DC EMBROIDERY FRAME

Ref. No.	Description	Part No.	Remark	Ref. No.	Description	Part No.	Remark
1	Z-spec. Frame Sash	CD0B010000000		31	Frame Sash, Rear	CD0G0140＊＊＊＊	
2	Z-spec. Frame Sash Cover	CD0B020000000		32	Border Frame Lengthwise Sash A	CDOG0150＊＊＊＊	
3	Z-spec. Roller Base	CD0B030000000		33	Border Frame Lengthwise Sash B	CD0G0160＊＊＊＊	
4	Right Side Spacer	CD0G060000000		34	Z-spec. Frame Sash Spacer	CD0B090000000	
5	Countersunk Head Screw	SS110510 0SD0	M5＊10	35	Z-spec. Roller Float-preventive Block	ME0B050000000	
6	Truss Head Screw	SS0105050SD0	M5＊5	36	Truss Head Screw	SS0105150SD0	M5＊15
7	Right Corner	CD0G050000000		37	Side Cover L	BF1122000000	
8	Embroidery Space Indicator	CD0B060000000		38	Side Cover R	BF1123000000	
9	Crosswise Sash Rail	EN030200＊＊＊＊					
10	Truss Head Screw	SS0105080SD0	M5＊8				
11	Hexagon Socket Head Cap Screw	SS6205150TP0	M5＊15				
12	Plain Washer	WSP05C008SD0	M5				
13	Eccentric Z-spec. Roller	BF2332000000					
14	Z-spec. Roller	BF2312000000					
15	Rail Plate	CD0B040000000					
16	Right Corner C	MX0306000000					
17	Truss Head Screw	SS0104080SD0	M4＊8				
18	Border Frame Clip	EG0326 00＊＊＊＊					
19	No.3 Felt	ME0310000000					
20	No.1 Felt	ME0308000000					
21	Truss Head Screw	SS0105100SD0	M5＊10				
22	Border Frame Crosswise Sash A	CD0G0200＊＊＊＊					
23	Border Frame Crosswise Sash B	CD0G0300＊＊＊＊					
24	Hexagon Nut	SSN006SC0000	M6				
25	Hexagon Socket Head Cap Screw	SS6205230TN0	M5＊23				
26	Felt	ME0315 00＊＊＊＊					
27	Border Frame	CD0G0100＊＊＊＊					
28	Frame Sash, Lengthwise A	CD0G0110＊＊＊＊					
29	Frame Sash, Lengthwise B	CD0G0120＊＊＊＊					
30	Frame Sash, Front	CD0G0130＊＊＊＊					

Note: As for parts with marks # or ＊, please follow our instructions on Table of Contents in your parts order.

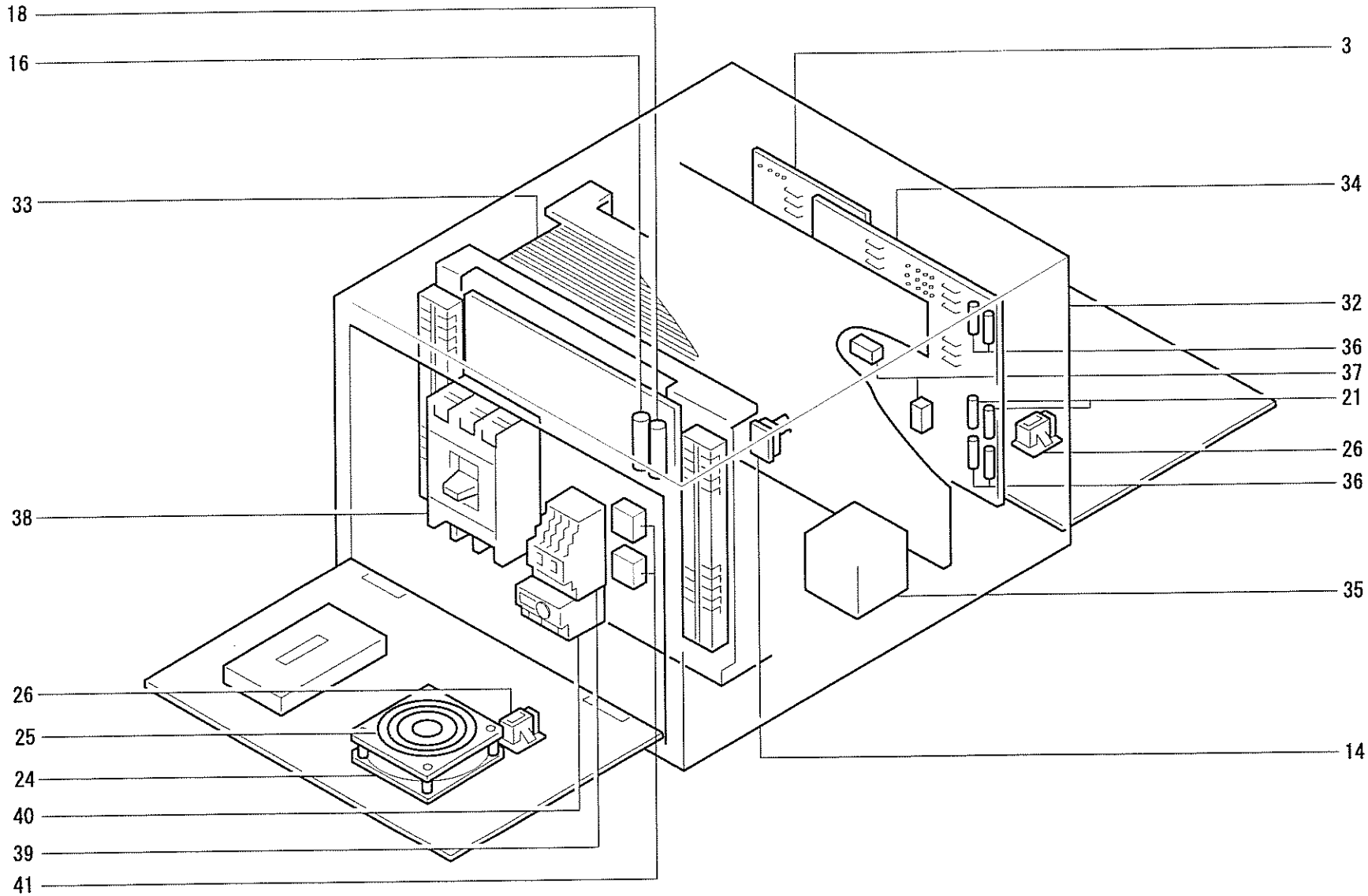
18
16
33
38
26
25
24
40
39
41
3
34
32
36
37
21
26
36
35
14

TME-DC POWER SUPPLY BOX

Ref. No.	Description	Part No.	Remark	Ref. No.	Description	Part No.	Remark
3	IMM Card	ED560100000 0					
14	Relay	PB0001 00KM00					
16	Glass Tube Fuse	PA5002100000					
18	Glass Tube Fuse	PA5002500000					
21	Glass Tube Fuse	PA5002800000					
24	Fan	PB0001 00BF00					
25	Air Filter	PB0002 00ZM00					
26	Receptacle	PB0002 00PA00					
32	Power Supply Box	ED5600A20000					
33	Transformer	PB0052 00TV00					
34	D-Joint 12 Card	ED5604010000					
35	Automatic Voltage Regulator	PB0027 00PW00					
36	Glass Tube Fuse	PA5052A00000					
37	Fuse	PA5062320000					
38	No Fuse Breaker	PB0021 00KA00					
39	Electro-magnetic Contactor	PB0013A0KM00					
40	Thermal Relay	PB0023 00KA00					
41	Relay Unit	AT540000000 0					

Note: As for parts with marks # or ⁎, please follow our instructions on Table of Contents in your parts order.

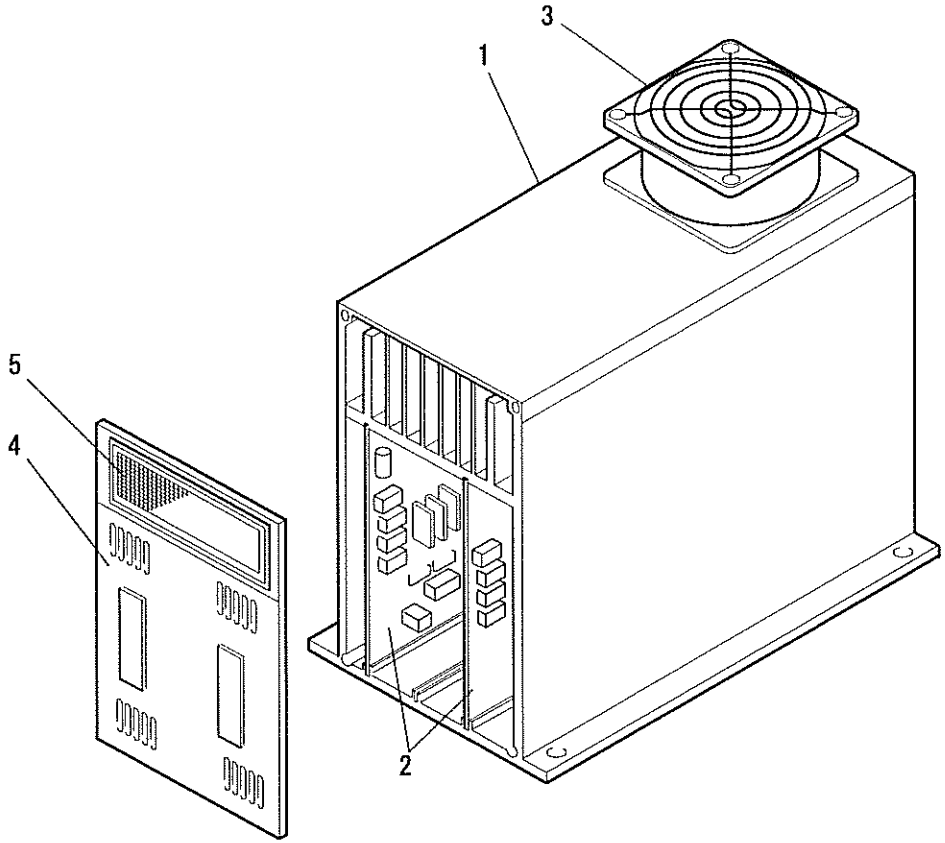
3
1
5
4
2

TME-DC DRIVER BOX

Ref. No.	Description	Part No.	Remark	Ref. No.	Description	Part No.	Remark
1	Driver Box	EH5403A10000					
2	Driver Card (PC Board)	EH5404060000					
3	Fan	PB000700BF00					
4	Driver Box Front Panel	EH5405A00000					
5	Air Filter	PB000600ZM00					

Note: As for parts with marks # or ⁎, please follow our instructions on Table of Contents in your parts order.

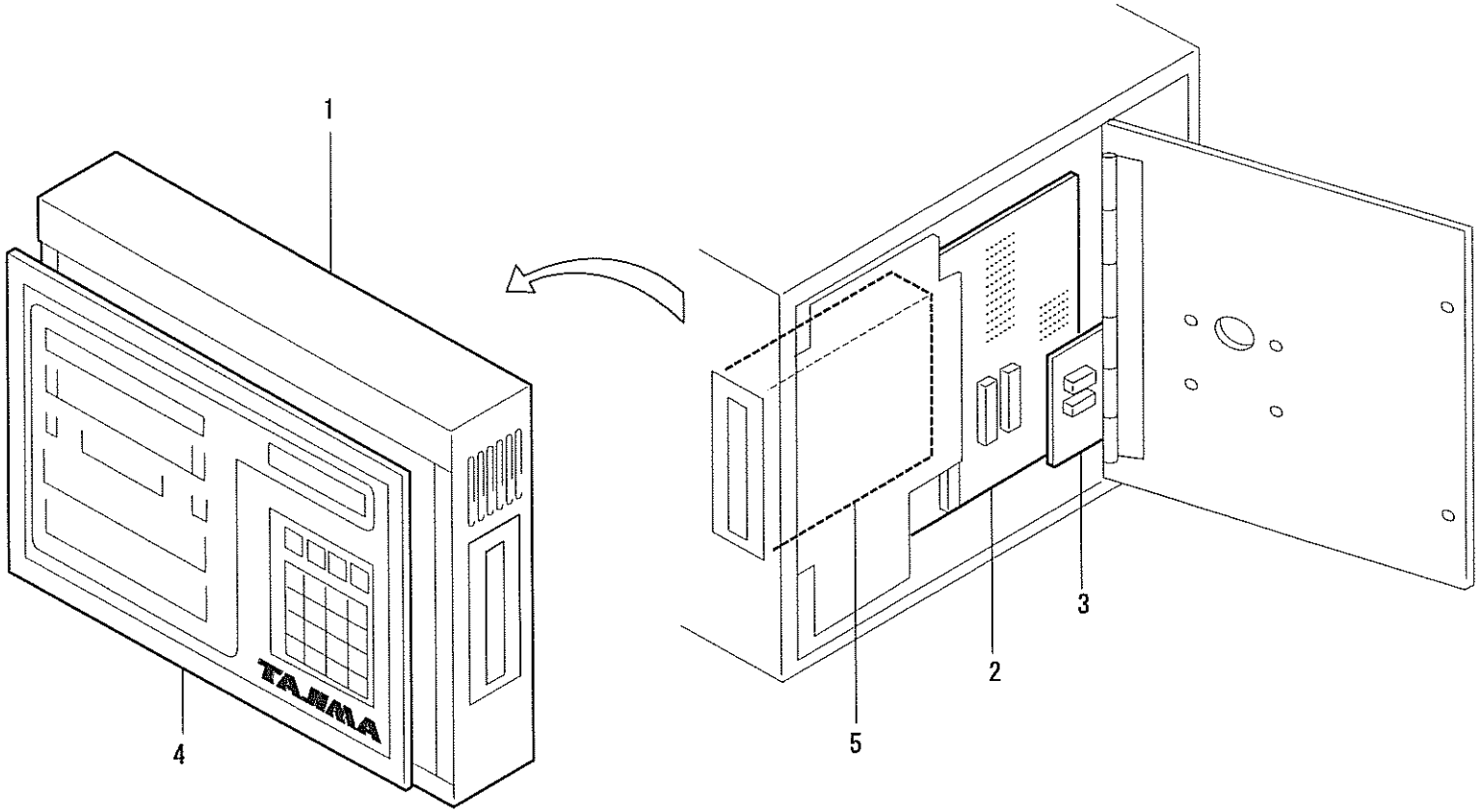
1
2
3
4
5
TAJIMA

TME-DC CONTROLLER BOX

Ref. No.	Description	Part No.	Remark	Ref. No.	Description	Part No.	Remark
1	Controller Box	ED5100D00000	English				
1	Controller Box	ED5100F00000	Chinese				
1	Controller Box	ED5100G00000	Korean				
2	IDM Card	ED5101010000					
3	D-Memory Card	ED5102000000					
4	Panel Film	ED5103E00000	English				
4	Panel Film	ED5103G00000	Chinese				
4	Panel Film	ED5103H00000	Korean				
4	Panel Film (Magnet Type)	ED5103J00000	Spanish				
5	Floppy Disk Driver	PB000700RE00					

Note: As for parts with marks # or ⁎, please follow our instructions on Table of Contents in your parts order.

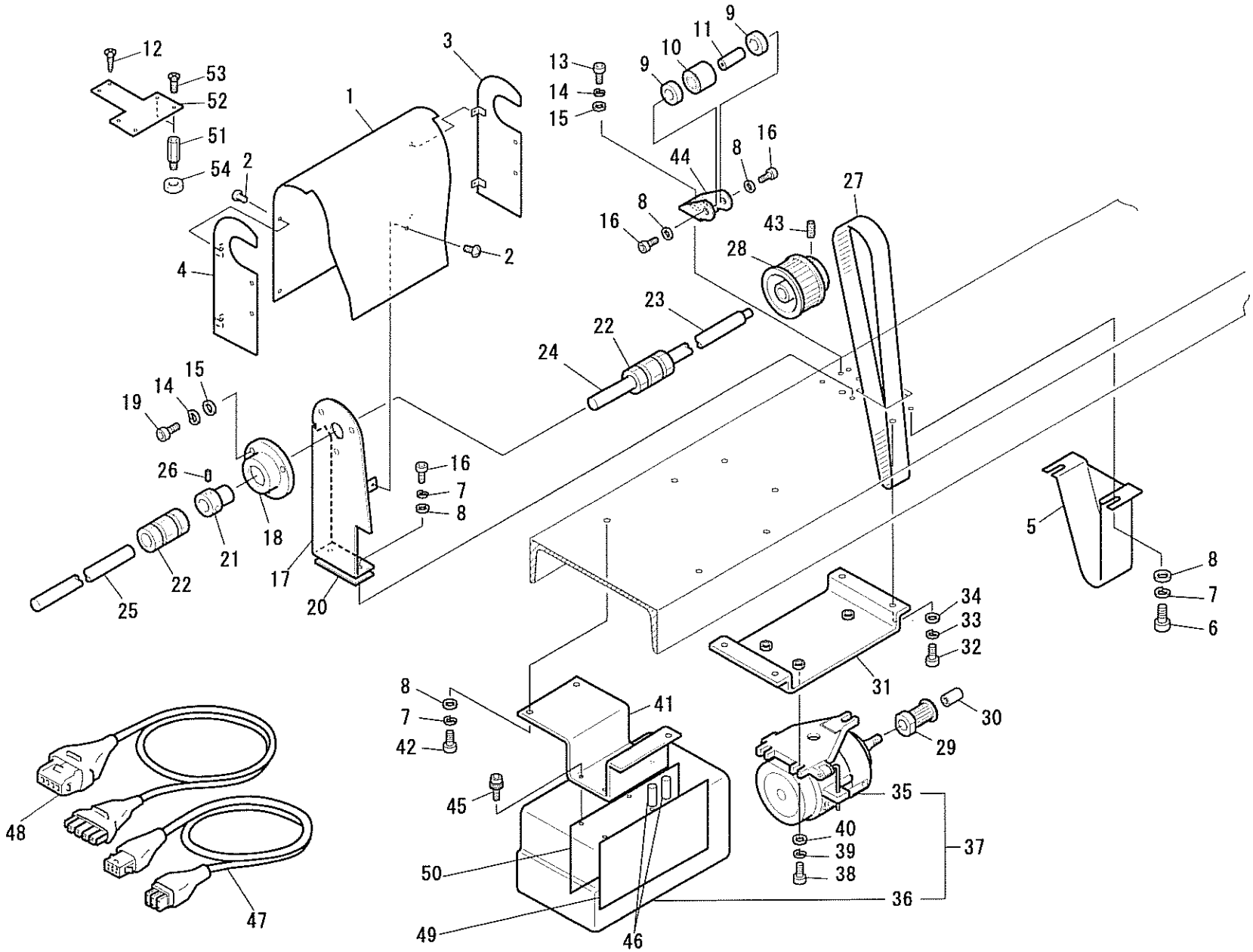
12
53
52
51
54
2
1
3
4
2
13
14
15
9
10
11
9
44
8
16
8
16
27
43
28
23
22
24
19
14
15
26
16
7
8
18
21
22
25
17
20
5
8
7
6
34
33
32
31
8
7
42
41
30
29
45
35
40
39
38
37
36
50
49
46
48
47

TAJIMA

TME-DC MAIN SHAFT MOTOR ASSEMBLY

Ref. No.	Description	Part No.	Remark	Ref. No.	Description	Part No.	Remark
1	Pulley Cover A	CD0A34A0＊＊＊＊		29	Drive Pulley	ED0121000000	
2	Truss Head Screw	SS0104050SD0	M4＊5	30	Drive Pulley Nut	ED0122000000	
3	Pulley Cover B	CD0A34B00000		31	Motor Base	CD0A45000000	
4	Pulley Cover C	CD0A34C00000		32	Hexagon Socket Head Cap Screw	SS6208200TN0	M8＊20
5	Motor Pulley Cover	CD0A37000000		33	Spring Washer	WSS080000KC0	M8
6	Hexagon Socket Head Cap Screw	SS6206120TN0	M6＊12	34	Plain Washer	WSP08J016SC0	M8
7	Spring Washer	WSS060000KC0	M6	35	Main Shaft Motor	ED6202000000	
8	Plain Washer	WSP06D010SC0	M6	36	Main Shaft Motor Control Box H	ED6201A30000	
9	Bearing	BP6202ZZ0000		37	Main Shaft Motor Assembly H	ED6200A30000	
10	Tension Roller	CD0A38000000		38	Hexagon Bolt	SS9310250TN0	M10＊25
11	Roller Shaft	CD0A39000000		39	Spring Washer	WSS100000KC0	M10
12	Countersunk Head Wood Screw		3.1P＊16	40	Plain Washer	WSP10S032SC0	M10
13	Hexagon Socket Head Cap Screw	SS6205150TN0	M5＊15	41	Control Box Base	CD0A47000000	
14	Spring Washer	WSS050000KC0	M5	42	Hexagon Socket Head Cap Screw	SS6206150TN0	M6＊15
15	Plain Washer	WSP05C008SC0	M5	43	Hexagon Socket Head Set Screw	SS8208100TN0	M8＊10
16	Hexagon Socket Head Cap Screw	SS6206150TN0	M6＊15	44	Tension Base	CD0A46000000	
17	Bearing Case Base	CD0A44000000		45	Attaching Screw A	SSA005140000	
18	Bearing Case	CD0A41000000		46	Glass Tube Fuse	PA5012K00000	
19	Hexagon Socket Head Cap Screw	SS6205100TN0	M5＊10	47	Main Shaft Motor Extension Cord A	ED6204A0＊＊＊＊	
20	Bearing Case Base Spacer A	CD0A54A00000	0.2t	48	Main Shaft Motor Extension Cord B	ED6205A0＊＊＊＊	
20	Bearing Case Base Spacer B	CD0A54B00000	0.5t	49	A-H Card	ED6206A30000	
20	Bearing Case Base Spacer C	CD0A54C00000	1.0t	50	B-H Card	ED6207A20000	
21	15mm Dia. Bearing Case Collar	EF0106000000		51	Cover Stud	CD0A28000000	
22	N-Coupling	BPN150150000		52	Belt Cover	CD0A09000000	
23	Main Shaft A	CD0A50A0＊＊＊＊		53	Countersunk Head Screw	SS110308 0SD0	M3＊8
24	Main Shaft B	CD0A50B0＊＊＊＊		54	Hexagon Nut	SSN006SC0000	M6
25	Main Shaft C	CD0A50C0＊＊＊＊					
26	Hexagon Socket Head Set Screw	SS820606 0TN0	M6＊6				
27	Timing Belt	BPS5M3510850					
28	Main Shaft Pulley	CD0A42000000					

Note: As for parts with marks # or ＊, please follow our instructions on Table of Contents in your parts order.